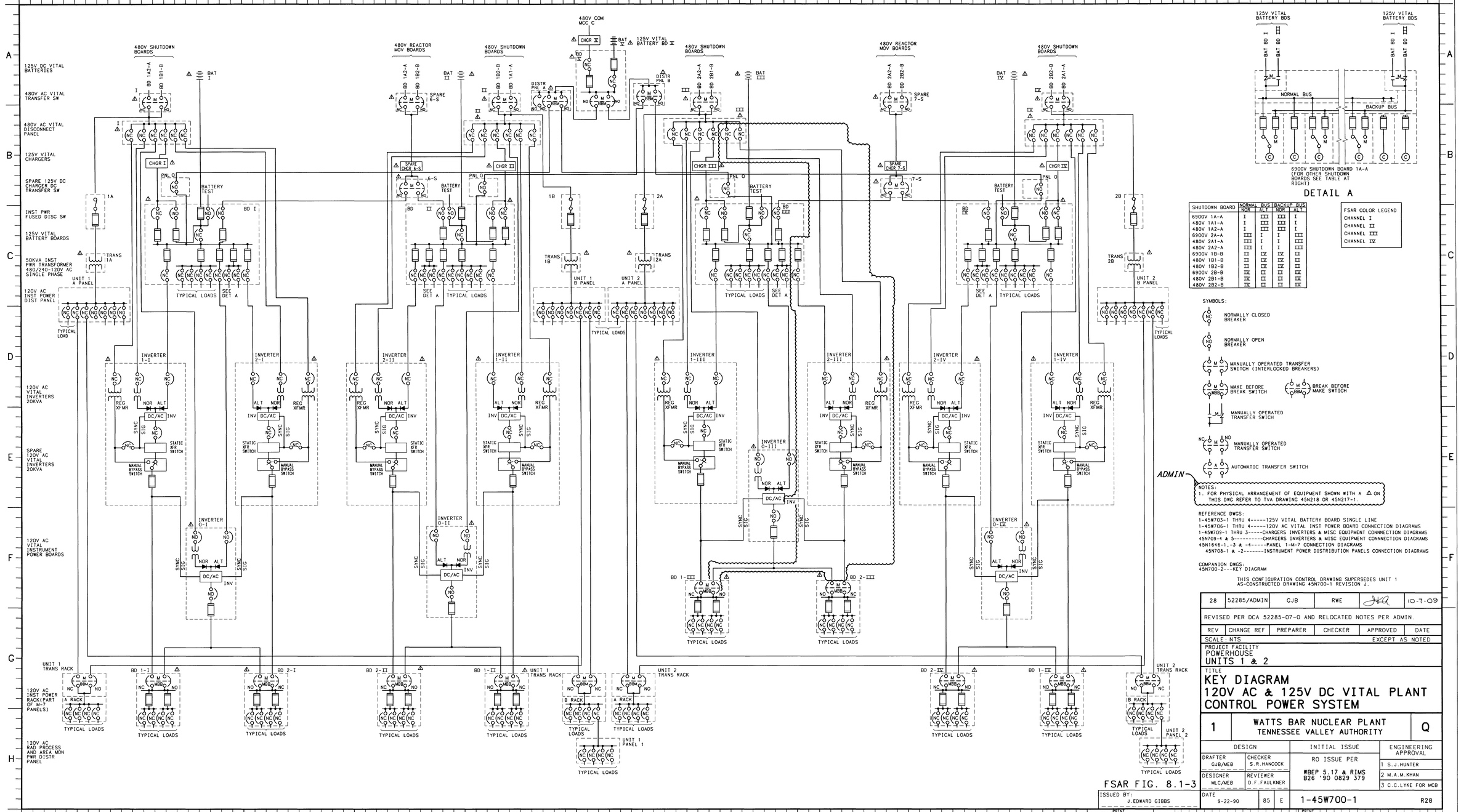

DETAIL A

SHUTDOWN BOARD	NORMAL BUS NOR	NORMAL BUS ALT	BACKUP BUS NOR	BACKUP BUS ALT
6900V 1A-A	I	III	III	I
480V 1A1-A	I	III	III	I
480V 1A2-A	I	III	III	I
6900V 2A-A	III	I	I	III
480V 2A1-A	III	I	I	III
480V 2A2-A	III	I	I	III
6900V 1B-B	II	IV	IV	II
480V 1B1-B	II	IV	IV	II
480V 1B2-B	II	IV	IV	II
6900V 2B-B	IV	II	II	IV
480V 2B1-B	IV	II	II	IV
480V 2B2-B	IV	II	II	IV

FSAR COLOR LEGEND
CHANNEL I
CHANNEL II
CHANNEL III
CHANNEL IV

SYMBOLS:
- NORMALLY CLOSED BREAKER
- NORMALLY OPEN BREAKER
- MANUALLY OPERATED TRANSFER SWITCH (INTERLOCKED BREAKERS)
- MAKE BEFORE BREAK SWITCH
- BREAK BEFORE MAKE SWITCH
- MANUALLY OPERATED TRANSFER SWITCH
- MANUALLY OPERATED TRANSFER SWITCH
- AUTOMATIC TRANSFER SWITCH

ADMIN

NOTES:
1. FOR PHYSICAL ARRANGEMENT OF EQUIPMENT SHOWN WITH A ⚠ ON THIS DWG REFER TO TVA DRAWING 45N218 OR 45N217-1.

REFERENCE DWGS:
1-45W703-1 THRU 4-----125V VITAL BATTERY BOARD SINGLE LINE
1-45W706-1 THRU 4-----120V AC VITAL INST POWER BOARD CONNECTION DIAGRAMS
1-45W709-1 THRU 3-----CHARGERS INVERTERS & MISC EQUIPMENT CONNNECTION DIAGRAMS
45N709-4 & 5---------CHARGERS INVERTERS & MISC EQUIPMENT CONNNECTION DIAGRAMS
45N1646-1,-3 & -4-----PANEL 1-M-7 CONNECTION DIAGRAMS
45N708-1 & -2-------INSTRUMENT POWER DISTRIBUTION PANELS CONNECTION DIAGRAMS

COMPANION DWGS:
45N700-2--KEY DIAGRAM

THIS CONFIGURATION CONTROL DRAWING SUPERSEDES UNIT 1 AS-CONSTRUCTED DRAWING 45N700-1 REVISION J.

28	52285/ADMIN	GJB	RWE	JKQ	10-7-09

REVISED PER DCA 52285-07-0 AND RELOCATED NOTES PER ADMIN.

REV	CHANGE REF	PREPARER	CHECKER	APPROVED	DATE

SCALE: NTS — EXCEPT AS NOTED

PROJECT FACILITY
POWERHOUSE
UNITS 1 & 2

TITLE
KEY DIAGRAM 120V AC & 125V DC VITAL PLANT CONTROL POWER SYSTEM

1 — WATTS BAR NUCLEAR PLANT, TENNESSEE VALLEY AUTHORITY — Q

DESIGN		INITIAL ISSUE	ENGINEERING APPROVAL
DRAFTER GJB/MEB	CHECKER S.R.HANCOCK	RO ISSUE PER WBEP 5.17 & RIMS B26 '90 0829 379	1 S.J.HUNTER
DESIGNER MLC/MEB	REVIEWER D.F.FAULKNER		2 M.A.M.KHAN
			3 C.C.LYKE FOR MCB

DATE 9-22-90 | 85 | E | 1-45W700-1 | R28

FSAR FIG. 8.1-3

ISSUED BY: J.EDWARD GIBBS

PRINT SIZE H — BR OR PROJ | AB CE EE ME NE FE HE SE TE BL BF WB SQ

CAD MAINTAINED DRAWING

CONFIGURATION CONTROL DRAWING