Safety Evaluation Report

Renewal of the Facility Operating License for the University of Florida Training Reactor

License No. R-56
Docket No. 50-083

University of Florida, Gainesville, FL

United States Nuclear Regulatory Commission

Office of Nuclear Reactor Regulation

March 2017

ABSTRACT

This safety evaluation report summarizes the findings of a safety review conducted by the staff of the U.S. Nuclear Regulatory Commission (NRC), Office of Nuclear Reactor Regulation. The NRC staff conducted this review in response to a timely application filed by the University of Florida (UF, the licensee) for a 20-year renewal of Facility Operating License No. R-56 to continue to operate the University of Florida Training Reactor (UFTR). The facility is located in Gainesville, Alachua County, Florida. The NRC staff's safety review considered information submitted by the licensee, past operating history recorded in the licensee's annual reports to the NRC, inspection reports prepared by NRC personnel, licensee responses to requests for additional information (RAI), and direct observations during site visits. On the basis of this review, the NRC staff concludes that the licensee can continue to operate the UFTR for the term of the renewed facility license, in accordance with the license, without endangering the public health and safety, facility personnel, or the environment.

CONTENTS

LIST OF TABLES

LIST OF FIGURES

LIST OF ABBREVIATIONS, ACRONYMS, AND UNITS

Abbreviation/Acronym	Definition
ac	alternating current
ADAMS	Agencywide Documents Access and Management System
AEA	Atomic Energy Act
ALARA	as low as reasonably achievable
ANL	Argonne National Laboratory
Ar	argon
Be	beryllium
BOC	beginning of cycle
BOL	beginning of life
CAL	confirmatory action letter
CAM	continuous air monitoring
CFR	*Code of Federal Regulations*
DCF	dose conversion factor
DNBR	departure from nucleate boiling ratio
DOE	Department of Energy
EFPH	effective full-power hour
EOC	end of cycle
EOL	end of life
EP	emergency plan
EPA	Environmental Protection Agency
EWTP	East-West throughport
FGR	Federal Guidance Report
FHA	fuel handling accident
FR	*Federal Register*
FY	fiscal year
GM	Geiger-Mueller
HEU	highly-enriched uranium
I	iodine
I&C	instrumentation and control
IR	inspection report
ISG	interim staff guidance
Kr	krypton
LC	license condition
LCC	limiting core configuration
LCO	limiting condition for operation
LEU	low enriched uranium
LOCA	loss of coolant accident
LRA	license renewal application
LSSS	limiting safety system setting
MHA	maximum hypothetical accident
MCNP6	Monte Carlo N Particle code
MTR	materials testing reactor
N	nitrogen
NRC	U.S. Nuclear Regulatory Commission
ONBR	onset of nucleate boiling ratio
PAA	Price-Anderson Act

Abbreviation/Acronym	Definition
PARET	Program for the Analysis of Reactor Transients (software)
pcm	percent millirho (a unit of reactivity)
PSP	physical security plan
Pu	plutonium
RAI	request for additional information
RCO	radiation control officer
RCS	reactor control system
RELAP5-3D	Reactor Excursion and Leak Analysis Program (software)
RERTR	Reduced Enrichment for Research and Test Reactors
RG	Regulatory Guide
RO	reactor operator
RPS	reactor protection system
RSRS	Reactor Safety Review Subcommittee
RTP	rated thermal power
RTR	research and test reactor
SAR	safety analysis report
SbBe	antimony-beryllium
SDM	shutdown margin
SNM	special nuclear material
SER	safety evaluation report
SL	safety limit
SOI	statement of intent
SPO	Standard Operating Procedure
SR	surveillance requirement
SRM	staff requirements memorandum
SRO	senior reactor operator
SSC	structures, systems, and components
T&H	thermal-hydraulic
TEDE	total effective dose equivalent
TID	Technical Information Document
TLD	thermoluminescence dosimeter
TNT	trinitrotoluene
TRACE	TRAC/RELAP Advanced Computational Engine (software)
TS	technical specification
UF	University of Florida
UFTR	University of Florida Training Reactor
URW	uncontrolled rod withdrawal
Xe	xenon

Units	**Definition**
cc	cubic centimeter
Ci	curie
cm	centimeter
ft	feet
gpm	gallons per minute
hr	hour
kWt	kilowatt thermal
m	meter
m/s	meter per second
mhos	measure of conductivity
ml	milliliter
ms	millisecond
MWt	Megawatt thermal
°C	degrees Celsius
°F	degrees Fahrenheit
psi/psig/psia	pound-force per square inch; -gauge; -absolute
pcm	percent-millirho (a unit of reactivity)
pH	potential of hydrogen
s	second
wt%	weight percent
µ	micro

1. INTRODUCTION

1.1 Overview

By letter dated July 18, 2002, as supplemented on July 29 and July 31, 2002; February 25, 2003; and April 7, 2008, the University of Florida (UF, the licensee) submitted to the U.S. Nuclear Regulatory Commission (NRC) a license renewal application (LRA) for a 20-year renewal of the Class 104.c Facility Operating License No. R-56, Docket No. 50-83, for the University of Florida Training Reactor (UFTR, or "the facility") (Refs. 1-5). Subsequent to that submittal, the NRC issued an Order (Amendment No. 26 to the facility operating license, dated September 1, 2006 (Ref. 6)) to modify the UFTR Facility Operating License No. R-56 to approve the conversion of the reactor fuel from high enriched uranium (HEU) to low enriched uranium (LEU) fuel. The Order was published in the *Federal Register* (FR) on September 6, 2006 (71 FR 52587). By letter dated January 6, 2012 (Ref. 7), the licensee requested a one year extension to respond to the NRC staff's request for additional information (RAI) associated with the license renewal citing that the 2006 conversion order. Specifically, the licensee requested the additional time to update the UFTR licensing basis and application documents to be consistent with the conversion order. The licensee submitted revised documentation supporting the renewal by letters dated December 21, 2012; August 30 and December 12, 2013; and February 18 and April 9, 2014 (Refs. 8-12), that provided an updated core and safety analyses and included all facility changes and license amendments since the 2002 LRA. A Notice of Opportunity for Hearing was published in the FR on May 27, 2008 (73 FR 30424). No request for a hearing was received from the public.

Title 10 of the *Code of Federal Regulations* (10 CFR) Section 50.51(a) states that "[e]ach license will be issued for a fixed period of time to be specified in the license, but in no case to exceed 40 years from date-of-issuance." The U.S. Atomic Energy Commission (AEC) issued a construction permit, CPRR-21, to UF for construction of the UFTR on December 23, 1957. On May 21, 1959, the AEC issued Facility Operating License R-56 to UF for operation of the UFTR. The NRC renewed the UFTR facility operating license on August 30, 1982, for a period of 20 years expiring on August 29, 2002. As provided in the timely renewal provision in 10 CFR 2.109(a), the licensee is permitted to continue operating the UFTR under the terms and conditions of the current license until the NRC staff completes action on the license renewal request. A renewal would authorize continued operation of the UFTR for an additional 20 years from the date of issuance of the renewed license.

The regulation in 10 CFR 50.64, "Limitations on the use of highly enriched uranium (HEU) in domestic non-power reactors," requires NRC licensees of research and test reactors (RTRs) to convert from the use of HEU fuel to LEU fuel, unless specifically exempted. In a letter dated December 2, 2005 (Ref. 13), the licensee submitted its application requesting that the NRC approve the HEU to LEU fuel conversion and related changes to the technical specifications (TSs). In its conversion application, the licensee included a safety analysis report (SAR) for the conversion (hereafter called "the Conversion SAR") on which the change from HEU fuel to LEU fuel and the TS changes were based. By letter dated May 2, 2006, with clarification dated May 18 and May 22, 2006 (Refs. 14-16), the NRC staff issued RAIs to the licensee. The licensee responded to the RAI with supplemental information in letters dated June 19, July 20, August 4, and August 22, 2006 (Refs. 17-20).

The NRC issued an Order, as Amendment No. 26 to Facility Operating License No. R 56, to convert the UFTR to operation using LEU fuel by letter dated September 1, 2006 (Ref. 6). Included with the Order was the NRC staff's safety evaluation report (SER) (hereafter called "the Conversion SER") and a requirement to submit a reactor startup report following the conversion to LEU fuel. The licensee submitted the startup report on November 26, 2008 (hereafter called "the Startup Report") (Ref. 21). The NRC staff used the information provided in the Conversion SER and the Startup Report as the basis for some of the conclusions provided in this license renewal SER (hereafter called "the SER").

The NRC staff also based its review of the renewal of the UFTR facility operating license on the information contained in the LRA, as well as supporting supplements and the licensee's responses to RAIs. The NRC staff sent RAI letters, dated July 18 and July 25, 2016 (Refs. 22-23), for the updated SAR. The licensee provided responses to the RAIs, including updated TSs, by letter dated October 31, 2016 (Ref. 24), and a revised SAR and TSs on November 30, 2016 (Ref. 25), and March 6 and March 24, 2017 (Refs. 26-27).

Throughout this report, statements referring to the application SAR shall mean the SAR under which timely renewal is granted (Refs. 3-4). References to the updated SAR shall mean the reconstituted SAR submitted in 2012 through 2014 (Refs. 8-12), as supplemented by the responses to RAIs (Refs. 24-27).

The NRC staff also reviewed the UFTR physical security procedures, emergency plan (EP), and operator requalification program to ensure they were consistent with current NRC regulations and guidance. The results of the NRC staff review of the physical security procedures, EP, and the operator requalification program are discussed below. The NRC staff's LRA review also included information from annual reports of facility operation submitted by the licensee and inspection reports (IRs) prepared by NRC personnel. Information from UFTR annual reports cover the period from 2002 through 2015 (Refs. 28-40) and the NRC IRs cover the period from 2008 through 2016 (Refs. 41-50). UFTR did not operate during the period 2008 through 2014 because of an extended maintenance shutdown. Site visits were conducted on March 25, 2010, August 4, 2015, and February 22, 2016, to observe facility conditions and to discuss draft responses to the RAIs.

With the exception of the UFTR physical security procedures, portions of the SAR, and RAI responses, material pertaining to this review may be examined or copied, for a fee, at the NRC's Public Document Room, Room 01 F 21, One White Flint North, 11555 Rockville Pike, Rockville, Maryland 20852. The NRC maintains an Agencywide Documents Access and Management System (ADAMS), which provides text and image files of NRC's public documents. Publicly available documents related to this license renewal may be accessed through the NRC's Public Library, ADAMS Public Documents collection at https://www.nrc.gov/reading-rm /adams.html. If you do not have access to ADAMS or if you experience problems accessing the documents in ADAMS, contact the NRC Public Document Room staff by telephone at 1-800-397-4209 or 301-415-4737, or send an e-mail to Resources@nrc.gov. The UFTR physical security procedures are protected from public disclosure under 10 CFR 73.21, "Protection of Safeguards Information: Performance Requirements." Since portions of the SAR and RAI responses from the licensee contain security-related information and are protected from public disclosure, redacted versions are available to the public in ADAMS.

Section 9, “References,” of this SER contains the dates and associated ADAMS accession numbers of the licensee’s renewal application, associated supplements, and other references used to prepare this safety evaluation.

In conducting this review, the NRC staff evaluated the facility against the requirements of the regulations, including 10 CFR Part 20, “Standards for Protection against Radiation;” 10 CFR Part 30, “Rules of General Applicability to Domestic Licensing of Byproduct Material;” 10 CFR Part 50, “Domestic Licensing of Production and Utilization Facilities;” 10 CFR Part 51, “Environmental Protection Regulations for Domestic Licensing and Related Regulatory Functions;” and 10 CFR Part 70, “Domestic Licensing of Special Nuclear Material.” The recommendations of applicable regulatory guides and relevant accepted industry standards, such as the American National Standards Institute/American Nuclear Society (ANSI/ANS)-15 series are also considered. The NRC staff specifically referred to the recommendations contained in NUREG-1537, “Guidance for Preparing and Reviewing Applications for the Licensing of Non-Power Reactors,” issued February 1996 (Ref. 51). Because there are no specific accident-related regulations for research reactors, the NRC staff compared calculated dose values for accidents against the requirements in 10 CFR Part 20 (i.e., the standards for protecting employees and the public against radiation).

In SECY-08-0161, “Review of Research and Test Reactor License Renewal Applications,” dated October 24, 2008 (Ref. 52), the NRC staff provided the Commission with information regarding plans to streamline the review of LRAs for RTRs. The Commission issued its staff requirements memorandum (SRM)-SECY-08-0161), dated March 26, 2009 (Ref. 53). The SRM directed the NRC staff to streamline the renewal process for RTRs, using some combination of the options presented in SECY-08-0161. The SRM also directs the NRC staff to implement a graded approach whose scope is commensurate with the risk posed by each facility and to incorporate elements of the alternative safety review approach described in Enclosure 1 of SECY-08-0161.

The NRC staff developed interim staff guidance (ISG)-2009-001, “Interim Staff Guidance on the Streamlined Review Process for License Renewal for Research Reactors” (Ref. 54), for the review of LRAs. The streamlined review process is a graded approach based on licensed power level. Under this process, the facilities are divided into two tiers. Facilities with licensed power level of 2 megawatts thermal power (MWt) and greater, or requesting a power level increase, undergo a full review using NUREG-1537. Facilities with a licensed power level less than 2 MWt undergo a focused review that centers on the most safety significant aspects of the renewal application and relies on past NRC reviews for certain findings. The NRC staff issued a draft of the ISG for public comment and the NRC staff considered public comments in its development of the final ISG.

The NRC staff conducted the UFTR LRA review using the guidance in the final ISG and since the licensed power level for the UFTR is less than 2 MWt, the NRC staff performed a focused review of the LRA. Specifically, the review focuses on reactor design and operation, the reactor coolant system, instrumentation and controls, radiation protection, accident analysis, TSs, financial requirements, environmental assessment, and changes to the facility made during review of the application. TSs, when used in this review, may refer to the safety limit, limiting safety system settings, limiting conditions for operation, surveillance requirements, design features, and administrative controls. The NRC staff also used the guidance in ANSI/ANS-15.1-2007, “The Development of Technical Specifications for Research Reactors” (Ref. 55), in evaluating the UFTR TSs.

The licensee's LRA and supplements contained proposed revisions to the existing UFTR physical security plan (PSP). However, during the license renewal review, the licensee submitted license amendment request 27 entitled, "University of Florida, Proposed Amendment 27 – Security Plan," dated February 29, 2012 (Ref. 56), requesting to replace the UFTR PSP with physical security procedures.

The NRC staff reviewed the UFTR physical security procedures and found them to be in compliance with the applicable regulations contained in 10 CFR Part 73, "Physical Protection of Plants and Materials." The NRC staff issued Amendment No. 27 to the licensee in a letter dated November 17, 2015 (Ref. 57), which deleted License Condition 2.C.(3) that required a PSP be maintained and reflects the requested changes to the TSs to reference physical security procedures. The NRC does not require a PSP for facilities, such as the UFTR, that possess special nuclear material (SNM) in the amounts that are of low strategic significance. However, since the research reactor license authorizes possession of such material, security in accordance with the provisions of 10 CFR 73.67(f), "Fixed site requirements for special nuclear material of low strategic significance," must continue to be maintained. The NRC staff performs routine inspections of the licensee's compliance with the requirements of the physical security procedures. The NRC staff's review of the UFTR IRs for the past several years did not identify any violations of the facility security requirements. In addition, as part of the review of Amendment No. 27, the NRC staff found that the site-specific compensatory measures committed to in confirmatory action letter (CAL) No. NRR-04-010, have also been incorporated into the UFTR physical security procedures. These compensatory measures were put in place after the attacks of September 11, 2001, to enhance security at research reactors. Therefore, the NRC issued a letter dated April 22, 2016, to close CAL No. NRR-04-010 (Ref. 58).

The licensee is required to maintain an EP, in compliance with 10 CFR 50.54(q) and Appendix E to 10 CFR Part 50, "Emergency Planning and Preparedness for Production and Utilization Facilities," which provides reasonable assurance that the licensee will continue to be prepared to assess and respond to emergency events. As part of the LRA review, the NRC staff reviewed the most recent UFTR EP, dated August 2013 (Ref. 59). The licensee submitted this version as a complete reissuance of the UFTR EP as part of the licensee's efforts to reconstitute the UFTR licensing basis. This version is extracted from the RAI response letter dated August 30, 2013 (Ref. 9). The NRC staff completed its review and acknowledged that the UFTR EP, dated August 2013, is compliant with the regulations and is consistent with applicable guidance. The NRC staff reviewed the UFTR IRs for routine inspections of the licensee's compliance with the requirements of the EP and determined that no violations in this area have been identified in recent years.

As part of the LRA review, the NRC staff reviewed the UFTR Operator Requalification and Recertification Training Program Plan, dated August 4, 2011 (Ref. 60). By letter dated October 11, 2013 (Ref. 61), the NRC staff concluded that the proposed plan meets the applicable requirements of 10 CFR Section 50.54(i-1) and 10 CFR Part 55, "Operator's Licenses," and is acceptable.

The NRC staff separately evaluated the environmental impacts of the renewal of the license for the UFTR in accordance with 10 CFR Part 51. The NRC staff published an Environmental Assessment and Finding of No Significant Impact in the *Federal Register* on September 8, 2010 (75 FR 54657), which concluded that renewal of the UFTR facility operating license will not have a significant effect on the quality of the human environment.

This SER summarizes the NRC's staff findings from the safety review of the UFTR LRA and delineates the technical details considered in reviewing and evaluating the safety aspects of continued operation of the facility. The UFTR is licensed at a maximum steady-state thermal power level of 100 kilowatt thermal (kWt). This report provides the basis for renewing the UFTR license at this power level for a period of 20 years.

This SER was prepared by Duane A. Hardesty, Senior Project Manager from the NRC's Office of Nuclear Reactor Regulation (NRR), Division of Policy and Rulemaking, Research and Test Reactors Licensing Branch; Joseph Staudenmeier, Senior Reactor Systems Engineer from the NRC's Office of Research, Division of Systems Analysis, Code And Reactor Analysis Branch; Kosmas Lois, Financial Analyst from the NRC's NRR, Division of Inspection and Regional Support, Financial and International Projects Branch; and Jeannette Arce, Emergency Preparedness Specialist from the NRC's Office of Nuclear Security and Incident Response (NSIR), Division of Preparedness and Response, Reactor Licensing Branch. Energy Research, Incorporated (ERI), an NRC contractor, also provided input to this SER.

1.2 Summary and Conclusions on Principal Safety Considerations

The NRC staff's evaluation considered the information submitted by the licensee, including past operating history recorded in the licensee's annual reports to the NRC, as well as IRs prepared by the NRC personnel, site visits conducted by the NRC staff, and responses to RAIs by the licensee. On the basis of this evaluation and resolution of the principal issues reviewed for the UFTR, the NRC staff concludes the following:

- The design and use of reactor structures, systems, and components important to safety during normal operation discussed in Chapter 4 of the SAR, as supplemented, in accordance with the TSs are safe, and safe operation can reasonably be expected to continue.

- The UFTR is used as a teaching and training tool, for research operations, and provides a range of irradiation services. These irradiation services include isotope production (both medical and industrial), neutron activation analysis (e.g., geological samples), and neutron radiography, as described in SAR Section 10.1.

- The licensee considered the expected consequences of a broad spectrum of postulated credible accidents and a maximum hypothetical accident (MHA), emphasizing those that could lead to a loss of integrity of fuel plate cladding and a release of fission products. The licensee performed conservative analyses of the most serious credible accidents and the MHA and determined that the calculated potential radiation doses for facility personnel and members of the general public would not exceed 10 CFR Part 20 for unrestricted areas.

- The licensee's management organization, conduct of training, and research activities, in accordance with the TSs, are adequate to ensure safe operation of the facility.

- When operated in accordance with the TSs the systems provided for the control of radiological effluents are adequate to ensure that releases of radioactive materials from the facility are within the limits of the Commission's regulations and are as low as reasonably achievable (ALARA).

- The TSs, which state limits controlling operation of the facility, are such that there is reasonable assurance that the facility will be operated safely and reliably. There has been no significant degradation of the reactor, as discussed in the SAR, as supplemented, and the TSs will continue to help ensure that no significant degradation of safety-related equipment will occur.

- The licensee has reasonable access to sufficient resources to cover operating costs and eventually to decommission the reactor facility.

- The licensee's program for providing for the physical protection of the facility and its SNM complies with the requirements of 10 CFR Part 73, which provides reasonable assurance that the licensee will continue to provide for the physical protection of the facility and its SNM.

- The licensee maintains an EP in compliance with 10 CFR 50.54(q) and Appendix E to 10 CFR Part 50, which provides reasonable assurance that the licensee will continue to be prepared to assess and respond to emergency events.

- The licensee's procedures for training its reactor operators and the operator requalification plan give reasonable assurance that the licensee will continue to have qualified staff that can safely operate the reactor.

- Operation of the facility and the handling of radioactive material under the control of the UFTR Radiation Protection Program are not expected to result in doses to personnel in excess of 10 CFR Part 20 dose limits and are expected to be consistent with ALARA principles.

On the basis of these findings, the NRC staff concludes that there is reasonable assurance that the licensee can continue to operate the UFTR in accordance with the Atomic Energy Act (AEA) of 1954, as amended, NRC regulations, and the renewed facility operating license, without endangering public health and safety, facility personnel, or the environment. The NRC staff further concludes that the issuance of the renewed license will not be inimical to the common defense and security.

1.3 General Facility Description

According to SAR Section 1.3, the UFTR is part of a cluster of buildings on the UF campus at Gainesville, in Alachua County, Florida. The reactor building is connected to the Nuclear Sciences Building on the main campus in the immediate vicinity of the College of Engineering and the College of Journalism. The UFTR is a small nuclear research and training reactor design known as the Argonaut. The original Argonaut (which is an acronym for Argonne Nuclear Assembly for University Training) was built at Argonne National Laboratory. This reactor was rated for 10 kWt. The UFTR is an Argonaut used for student training in reactor engineering theory and operation, nuclear research, and a range of irradiation services, modified in 1964 to operate at a maximum steady-state power of 100 kWt. The Board of Directors of the American Nuclear Society approved the UFTR for a Nuclear Historic Landmark Award on March 23, 2001.

The reactor is heterogeneous using LEU silicide-aluminum materials testing reactor-type fuel plates in a rectangular geometry. The core consists of six aluminum fuel boxes each of which can hold up to four fuel assemblies. Water is used as the coolant and partial moderator. The remaining moderator is made up of graphite blocks that surround the fuel boxes. The biological shield is made of cast-in-place concrete with additional sections of removable concrete shielding. The biological shield is arranged to prevent radiation streaming.

The UFTR TSs require the core to be cooled by forced flow of water that is circulated through an external heat removal and purification system as described in SAR Chapter 5. The UFTR experimental facilities include the space adjacent to the reactor core, a pneumatic transfer system, beam tubes, and a thermal column as described in SAR Chapter 10. The control blades consist of four cadmium vanes shrouded in magnesium (three safety and one regulating). These blades are moved in and out of spaces in-between the fuel boxes by individual mechanical drives. Upon a loss of electrical power, the control blades disengage and drop by gravity into the reactor core to achieve subcritical conditions as described in Section 3.1 of the UFTR SAR.

1.4 Shared Facilities and Equipment

From observations made during site visits, the UFTR is contained in a reactor cell in a reactor building that contains minimal penetrations. Even though a pneumatic air supply line for the reactor building runs through the reactor cell, there are no connections to this supply line within the reactor cell itself. Other utilities, such as cooling for the control room and all equipment within the reactor building, are provided directly to the reactor building. Since UFTR operation commenced, there has been no adverse impact on the operation or safety of the reactor resulting from this arrangement. Electrical power and potable water are supplied to the UFTR facility from the adjoining Nuclear Sciences building. Offices for reactor personnel associated with the reactor program and some laboratories are also located in the Nuclear Sciences building.

1.5 Comparison with Similar Facilities

The UFTR is the last operating Argonaut-type reactor licensed by the NRC. All other NRC-licensed Argonaut research reactors have been decommissioned and have had their licenses terminated. No significant safety issues have been identified during the operation of these other Argonaut-type reactors. The fuel, instruments, and controls used in the UFTR are similar in principle to those in other RTRs licensed by the NRC. The UFTR has no unique features that would preclude applying knowledge and experience gained in the operation of other comparable reactors.

1.6 Summary of Operations

The usage of the UFTR is primarily research and education, including training students in reactor engineering theory and operation, nuclear research programs that utilize irradiation facilities, and through the support of the Department of Energy (DOE) Reactor Sharing Program. Although the UFTR did not operate during the period of 2009 through 2014, the utilization of the UFTR over the period of 2002 through 2015 averaged approximately 5,500 kW-hrs per year of energy generated, with an average running time of approximately 85 hours per year (Refs. 28-40). Expectations for the upcoming license renewal period are to increase UFTR utilization back to historic highs while continuing to pursue opportunities for

growth in existing and new program areas (Ref. 11). The NRC staff review considered the UFTR annual reports from 2002 through 2015 (Refs. 28-40) and NRC IRs from 2008 through 2016 (Refs. 41-50). The annual report summaries did not indicate any significant degradation of fuel element integrity, control rod operability issues, or radiological exposure concerns. The scram circuits required for operation are calibrated regularly. The IRs reviewed identified no findings of significance.

1.7 Compliance with the Nuclear Waste Policy Act of 1982

Section 302(b)(1)(B) of the Nuclear Waste Policy Act of 1982, 42 U.S.C.§10222(b)(1)(B), specifies that the NRC may require, as a precondition to issuing or renewing a facility operating license for a research or test reactor, that the licensee entered into an agreement with the DOE for the disposal of high-level radioactive wastes and spent nuclear fuel. In a letter dated May 3, 1983, R.L. Morgan of DOE informed H. Denton of the NRC that DOE has determined that universities and other government agencies operating non-power reactors have entered into contracts with DOE stating that DOE retains title to the fuel and is obligated to take the spent nuclear fuel and high-level waste for storage or reprocessing. An e-mail, dated January 15, 2014 (Ref. 62), sent from Kenny Osborne (DOE) to Duane Hardesty (NRC) reconfirms this contractual obligation with respect to the fuel at the UFTR (DOE Contract No. 74551), valid from June 1, 2008, to December 31, 2017. Additionally, DOE renews these contracts prior to their expiration to ensure that they remain valid. Therefore, by entering into such an agreement with DOE, the licensee has satisfied the requirements of the Nuclear Waste Policy Act of 1982.

1.8 Facility Modifications and History

The AEC issued Construction Permit CPRR-21 to UF on December 23, 1957, for construction of the UFTR on its campus located in Gainesville, Alachua County, Florida. On May 21, 1959, the AEC issued Facility Operating License No. R-56 to UF for operation of the UFTR. The license authorized the licensee to operate the UFTR at steady-state power levels up to 10 kWt. In 1964, the reactor was modified and the license was amended to allow operation up to its current power level of 100 kWt. The license was last renewed, for a period of 20 years, by Amendment No. 23 to the UFTR facility operating license on August 30, 1982. The review by the NRC staff of the modifications made since the last renewal indicates that most modifications are technological upgrades to instrumentation or minor changes to the existing design that either enhanced capabilities or improved reactor operations.

UFTR Facility Operating License Amendment No. 14, issued March 6, 1984, added a new Section 6.6.3 to the UFTR TS, titled “Other Special Reports,” adding requirements for written reports to the NRC whenever there was a change in facility management and for significant changes in the accident analyses as described in the SAR.

UFTR Facility Operating License Amendment No. 15, issued June 27, 1984, and Amendment No. 16, issued November 25, 1985, both corrected typographical and administrative errors and clarified the intent of some requirements.

UFTR Facility Operating License Amendment No. 17, issued, April 27, 1988, revised the UFTR TSs to provide clarification on when it is allowable to secure the reactor vent system when the count rate is above 10 counts per second under non-emergency conditions. The UFTR TSs

were also revised to include a backup means for quantifying the radioactivity in the effluent during abnormal or emergency operating conditions.

UFTR Facility Operating License Amendment No. 18, issued March 25, 1993, revised the UFTR TSs to permit submittal of an annual report of activities up to last day of December instead of last day of November of each operating year and updated the current NRC mailing requirement.

UFTR Facility Operating License Amendment No. 19, issued March 4, 1994, provided conforming changes for the revised requirements of 10 CFR Part 20. The areas addressed included updating the limitation on argon-41 (Ar-41) discharge concentrations, updating the references to 10 CFR Part 20 for liquid and gaseous effluent discharges, and correcting the Federal dose limit for members of the public. The amendment also deleted any reference to prior plans to upgrade the UFTR to operate at 500 kWt.

UFTR Facility Operating License Amendment No. 20, issued February 6, 1995, made relevant reference to the regulations under 10 CFR Part 20 for releases into the sanitary sewer system. The amendment addressed the releases from the holdup tank as normal effluents instead of waste in accordance with 10 CFR 20.1301, “Dose limits for individual members of the public,” and 10 CFR 20.1302, “Compliance with dose limits for individual members of the public,” in Section 3.4.5 and Section 4.2.4 of the UFTR TSs.

UFTR Facility Operating License Amendment No. 21, issued October 10, 1996, was to allow the licensee two additional months, up to February, to submit the facility annual report by changing TS 6.6.1. This change was an administrative change to avoid the problem of failure to submit timely reports cited in NRC IRs.

UFTR Facility Operating License Amendment No. 22, issued December 3, 1997, was an administrative update to the name and address of the Department of Nuclear Engineering in TS 6.2.5 and the UFTR organization chart (TS Figure 6.1). In addition, the address for submission of annual reports to NRC Region II was deleted to reflect the transfer of the non-power reactor inspection program from the NRC Region II office to the Office of Nuclear Reactor Regulation.

UFTR Facility Operating License Amendment No. 23, issued December 28, 2001, authorized a change to the periodicity of fuel inspections from every two years, not to exceed 30 months, to every 5 years, not to exceed 6 years, to match the required interval for the surveillance on the reactor control and safety system. This combination of surveillances reduced the need for times of core region entry, reduced fuel and shielding block handling and the potential for fuel handling accidents, and is consistent with ALARA principles.

UFTR Facility Operating License Amendment No. 24, issued January 24, 2005, increased the interval of the surveillance for the control blades and drive system and the in-core reactor fuel elements from at least 4 elements every 5 years, with the interval between inspections not to exceed 6 years, to at least 8 elements every 10 years, with the interval between inspections not to exceed 12 years, and changed the TS interval of inspection and checks of the control blades and drive system from every 5 years, with the interval between inspections not to exceed 6 years, to every 10 years, with the interval between inspections not to exceed 12 years. This change reduced the considerable effort needed to carry out the inspection since access to the core of an Argonaut reactor requires disassembly of the primary shielding, which consists of a number of large, heavy shield blocks.

UFTR Facility Operating License Amendment No. 25, issued January 12, 2006, reduced the number of thermocouples required to monitor primary coolant temperature at the fuel box inlets and outlets and clarified where the primary coolant temperature measurement is to be taken. The change allowed operation of the UFTR with up to two less thermocouples at the outlet lines of two fuel boxes. Additionally, the change clarified where the temperature measurement is required to be taken to restrict the average primary coolant outlet temperature when measured at any monitored fuel box outlet.

UFTR Facility Operating License Amendment No. 26 authorized the conversion of the UFTR from HEU fuel to LEU fuel (Ref. 6). As was discussed in Section 1.1, "Overview," of this SER, this order modified the license, including the TSs and EP, in accordance with 10 CFR 50.64, which requires that non-power reactors, such as the UFTR, convert to LEU fuel under certain conditions. The licensee did not request any significant facility modifications as part of the fuel conversion.

As was discussed in Section 1.1 of this SER, UFTR Facility Operating License Amendment No. 27, issued November 17, 2015, authorized the change to License Condition 2.C.(3) to eliminate the need for a UFTR physical security plan and reflects the requested changes to the UFTR TSs to reference security procedures. The NRC does not require a physical security plan for the UFTR since the facility possesses SNM in the amounts that are of low strategic significance. However, security in accordance with the provisions of 10 CFR 73.67(f) must continue to be maintained.

The modifications to the UFTR reviewed for this LRA mostly involved technological upgrades to instrumentation and minor changes to the existing design that either enhanced its capability or improved reactor operations. All of these modifications were subject to evaluation under 10 CFR 50.59, "Changes, tests, and experiments," to ensure there was no impact on the safety of the UFTR. Furthermore, the NRC staff reviewed changes documented in the licensee's annual operating reports from 2002 through 2015 (Refs. 28-40) and the NRC IRs from 2008 through 2016 (Refs. 41-50). The results of these reviews indicated that any changes were performed, as required, in accordance with the requirements of 10 CFR 50.59. The NRC staff concludes that all changes appear to be reasonable and the licensing actions taken over the years seem appropriate. Furthermore, the licensee did not request any substantive facility changes as part of this LRA request. Two of the more significant changes to the facility that have occurred are discussed in the following paragraphs.

A loss of coolant inventory was initially reported to the NRC on October 27, 2008. The licensee identified a leak in a portion of the primary inlet piping encased in concrete. To fix the leak, the UFTR staff replaced the entire primary piping system with a completely new system manufactured and preassembled by a local contractor. The replacement was done in accordance with 10 CFR 50.59. So that the new piping was not encased in concrete, the piping system was slightly modified to divert the primary piping around the biological shielding, which is made of cast-in-place concrete below the reactor. To accomplish this, the new piping was manufactured to provide a longer entrance region (3.38 meters versus 3.28 meters) to the fuel boxes, the addition of two 45-degree bends in the return piping, and an additional 90-degree bend in the pipe returning from the group of 3 assemblies farthest from the coolant inlet. The licensee provided a detail calculation (Ref. 63) showing the change to flow resistance through friction and form (minor) losses is much smaller than that due to gravity and is therefore negligible. Additionally, the licensee replaced steel hardware with a metal that is not as prone to

high activation levels to minimize occupational exposure. Refer to discussion in Section 3.2 of this SER for further details.

Section 9.1.3 of the UFTR SAR describes the stack dilution system. The system is stated to have two modes of operation. In normal mode, the existing, previously-approved system exhaust exits the roof vent through the normally open damper. The UFTR high plume ventilation system is shown in the SAR as Figure 9-3 and reproduced in Figure 1-1 below.

As shown, the system consists of the existing approved stack dilution system that has a fan exhausting through the rooftop. The licensee has added a high plume system under 10 CFR 50.59. The high plume system adds a damper that can divert the reactor bay and core vent effluent to the cross-building ductwork, the inlet air bypass, the high plume exhaust fan, and the corresponding discharge nozzle. This results in greater dilution of effluents than possible with the normal mode of operation. The licensee provided information and a tour of the ventilation system to the NRC staff during a site visit in February 2016.

For purposes of the licensee's calculations, the normal mode of operation is analyzed to support the Ar-41 and accident dose calculations as described in Chapters 5 and 6 of this SER. In the submitted SAR and RAI responses, the high plume system operating characteristics are not described and the licensee conservatively does not credit the operation of the high plume system. The system is described in the licensee's 10 CFR 50.59 review documentation.

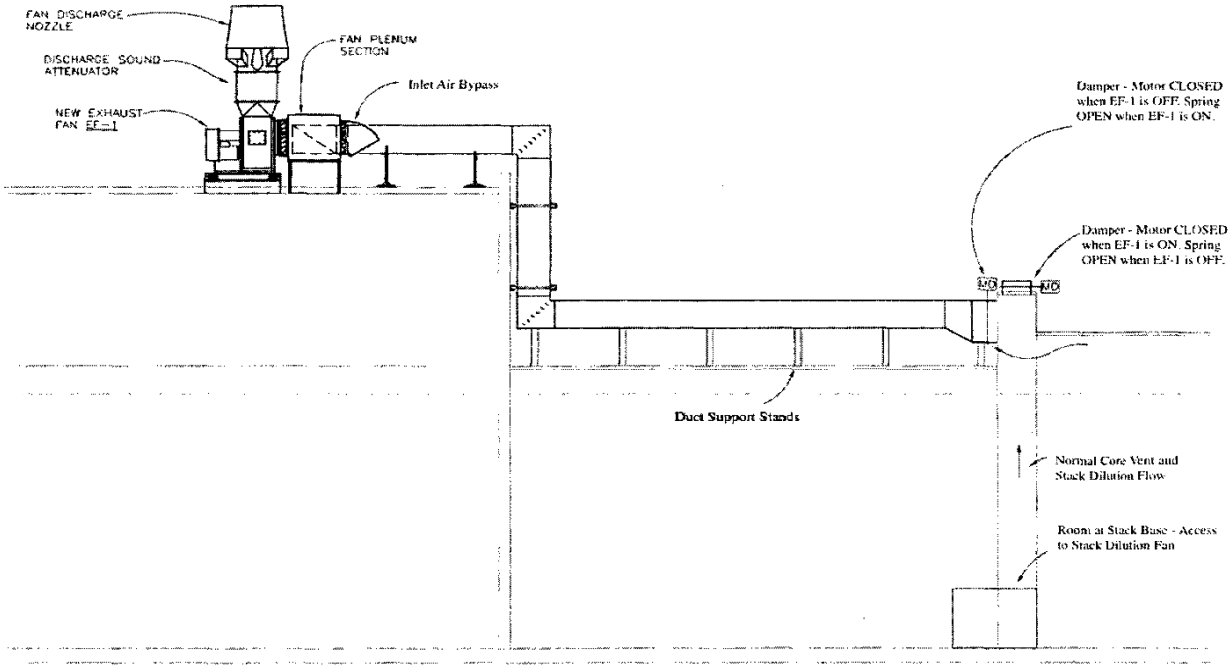

Figure 1-1 Illustration of Normal and High Plume Dilution System

1.9 Financial Consideration

1.9.1 Financial Ability to Operate the Reactor

The financial requirements for non-electric utility licensees are in 10 CFR 50.33(f):

> Except for an electric utility licensee for a license to operate a utilization facility of the type described in §50.21(b) or §50.22, [an application shall state] information sufficient to demonstrate to the Commission the financial qualification of the applicant to carry out, in accordance with regulations of this chapter, the activities for which the permit or license is sought.

The UFTR is a Class 104.c research and development facility that does not qualify as an "electric utility," as defined in 10 CFR Section 50.2, "Definitions." Pursuant to 10 CFR 50.33(f)(2), the application to renew or extend the term of any operating license for a non-power reactor shall include the financial information that is required in an application for an initial license. The NRC staff has determined that the UF must meet the financial qualifications requirements of 10 CFR 50.33(f) and is subject to a full financial qualifications review by the NRC. Specifically, the UF must provide information to demonstrate that it possesses or has reasonable assurance of obtaining the funds necessary to cover estimated operating costs for the period of the renewed facility operating license. Therefore, the UF must submit estimates for the total annual operating costs for each of the first five years of facility operations from the expected license renewal date and indicate the source(s) of funds to cover those costs. The licensee must also demonstrate that 50 percent or greater of its operating costs is devoted to non-commercial activities to be considered a non-commercial non-power reactor.

In July 2002, the licensee submitted a request for license renewal (Refs. 1-2). By letters dated February 26 and May 3, 2010 (Refs. 64-65), the licensee provided supplemental financial information to its application. By letter dated June 9, 2014 (Ref. 66), the NRC staff requested updated financial information. In the RAI responses (Refs. 67-68), the licensee provided the projected operating costs for fiscal years (FYs) 2015 through 2021. The projected operating costs for the UFTR are estimated to be: $494,174 in FY 2015, $503,952 in FY 2016, $514,023 in FY 2017, $524,397 in FY 2018, $535,082 in FY 2019, $546,088 in FY 2020, and $557,423 in FY 2021. The application states that the sources of funding will be from the State of Florida (to the UFTR), AREVA/Siemens, and the DOE. Using guidance in NUREG-1537, the NRC staff reviewed UFTR's estimated operating costs and projected sources of funds and finds them to be reasonable. Based on this review, the NRC staff finds that UF has supplied the appropriate financial information for operating costs. The NRC staff reviewed the financial ability of the licensee to operate the facility and determined that funds will be made available to operate the facility and that the financial status of the UFTR regarding operating costs is in accordance with the requirements of 10 CFR 50.33(f). Accordingly, the NRC staff concludes that the UF has met the financial qualification requirements under 10 CFR 50.33(f) and is financially qualified to engage in the proposed activities of the UFTR.

UFTR is currently licensed as a facility that is useful in research and development under Section 104.c of the AEA, 42 U.S.C. §2234(c). The regulation in 10 CFR 50.21(c) provides for issuance of a license to a facility which is useful in the conduct of research development activities if no more than 50 percent of the annual cost of owning and operating the facility is devoted to production of materials, products, or the sale of services, other than research and development or education or training. The UFTR reactor was originally licensed as a non-

commercial facility in 1959 and continues as an academic, non-commercial facility. In SAR Section 15.1 (Ref. 25), the licensee indicated that the cost devoted to commercial activities is less than 1 percent of the ownership and operating costs associated with the facility. Because 10 CFR 50.21(c) requires that the majority of reactor operating costs be funded by non-commercial uses and the cost of conducting commercial activities at UFTR is less than 50 percent of the total cost of the facility, the NRC staff concludes that the licensee can be renewed as a Section 104.c license.

1.9.2 Financial Ability to Decommission the Facility

Pursuant to 10 CFR 50.33(k)(1), the NRC requires that an application for an operating license for a production or utilization facility provide information to demonstrate how reasonable assurance will be provided that funds will be available to decommission the facility.

Under 10 CFR 50.75(d)(1), each non-power reactor licensee for or holder of an operating license for a production or utilization facility shall submit a decommissioning report as required by 10 CFR 50.33(k)(1). Pursuant to 10 CFR 50.75(d)(2), the report must contain a cost estimate for decommissioning the facility, an indication of the funding method(s) to be used to provide funding assurance for decommissioning, and a description of the means of adjusting the cost estimate and associated funding level periodically over the life of the facility. The acceptable methods for providing financial assurance for decommissioning are described in 10 CFR 50.75(e)(1).

In its LRA, the licensee provided a decommissioning cost estimate that considered actual vendor price quotes, prior experience with reactor disassembly, NRC decommissioning guidance, cost estimates, and decommissioning experience of other research reactors, such as the Georgia Tech Research Reactor. The cost to decommission the UFTR was estimated to be $2.768 million in 2002 dollars. By letter dated February 26, 2010 (Ref. 64), the licensee updated its cost estimate to be $3.28 million in FY 2009 dollars. Additionally, in the September 4, 2014 (Ref. 67), RAI response, the licensee updated its decommissioning cost estimate to be $4.03 million in FY 2015 dollars. The cost estimate segregates costs by labor; waste shipment and disposal; other costs including waste processing and transport, equipment, contracts, and supplies; and also includes a contingency factor of 25 percent. The licensee stated that it will adjust its future decommissioning cost estimates using U.S. Bureau of Labor Statistics Consumer Price Indices to adjust labor, energy, and transportation costs for inflation.

The licensee has elected to use a statement of intent (SOI) to provide financial assurance for decommissioning for the UFTR, as allowed by 10 CFR 50.75(e)(1)(iv) for a Federal, State, or local government licensee. The statement of intent is required to contain a cost estimate for decommissioning and indicate that funds for decommissioning will be obtained when necessary. The licensee's SOI, dated March 25, 2015 (Ref. 68), contains a decommissioning cost estimate of approximately $4.03 million for the DECON option, and states "...that funds will be made available when necessary in the amount of $4.5 million to decommission the University of Florida Training Reactor, located in Gainesville, Florida…sufficiently in advance of decommissioning to prevent delay of required activities."

To support the SOI and the licensee's qualifications to use an SOI, the LRA stated that UF is a State institution. The LRA also provided information supporting UF's representation that the decommissioning funding obligations of UFTR are backed by the full faith and credit of the State of Florida. The licensee also provided documentation verifying that Michael V. McKee, Interim

Vice President and Chief Financial Officer of the UF, and the signatory to the SOI, is authorized to execute contracts on behalf of the UF.

The NRC staff reviewed the information provided by the licensee on decommissioning funding assurance as described above and finds that the licensee is a State Government and, under 10 CFR 50.75(e)(1)(iv), the SOI is acceptable, the decommissioning cost estimate is reasonable, and the licensee's means of adjusting the cost estimate and associated funding level periodically over the life of the facility is reasonable.

Based on this review, the NRC staff finds that funds will be made available to decommission the facility and that the financial status of the licensee regarding decommissioning costs is in accordance with the requirements of 10 CFR 50.33(k) and 10 CFR 50.75. The NRC staff finds that any adjustment of the decommissioning cost estimate must incorporate, among other things, changes in costs due to the availability of disposal facilities and that the licensee has an obligation under 10 CFR 50.9, "Completeness and accuracy of information," to update any changes in the projected cost, including changes in costs resulting from increased disposal options. Therefore, the staff concludes that the licensee's financial ability to decommission the UFTR facility is acceptable.

1.9.3 Foreign Ownership, Control, or Domination

Section 104.d of the AEA, as amended, prohibits the NRC from issuing a license under Section 104 of the AEA to "any corporation or other entity if the Commission knows or has reason to believe it is owned, controlled, or dominated by an alien, a foreign corporation, or a foreign government." The NRC regulations in 10 CFR 50.33(d) and 10 CFR 50.38, "Ineligibility of certain applicants," contain language to implement this prohibition. According to the licensee, the UFTR is owned and operated by the UF, an entity (component unit) of the State of Florida. The UF, Board of Trustees, a public body corporate and instrumentality of the State of Florida, is the University's legal entity that sets policy and provides governance for the University pursuant to its powers as established by the Florida Board of Governors and applicable law. The Board of Governors is a body created under the Florida constitution that is responsible for the management of the State University System of Florida. Based on the above discussion, the NRC staff finds that because the UF is an entity of the State of Florida government, the NRC staff has no reason to believe it is foreign owned, controlled, or dominated.

1.9.4 Nuclear Insurance and Indemnity

The NRC staff notes that the licensee currently has an indemnity agreement with the Commission. The agreement expires only when Facility Operating License No. R-56 expires, provided removal and transportation of all radioactive material from the location has been completed. Therefore, the licensee will continue to be a party to the present indemnity agreement following issuance of the renewed facility operating license. Under 10 CFR 140.71, "Scope," the UF, as a nonprofit educational institution, is not required to provide nuclear liability insurance. The Commission will indemnify the UF for any claims arising out of a nuclear incident under the Price-Anderson Act (PAA), Section 170 of The Act, and in accordance with the provisions under its indemnity agreement pursuant to 10 CFR 140.95, "Appendix E- Form of indemnity agreement with nonprofit educational institutions," above $250,000 and up to $500 million. Also, because the UFTR is not a power reactor, the licensee is not required to purchase property insurance under 10 CFR 50.54(w). However, the NRC is requesting that the licensee update (through amendment) the site boundary for the purposes of government

indemnity. Failure to do so places a risk on the UF that damages may not be covered to the full extent permitted under the PAA or that the indemnity agreement is in non-compliance with the law.

1.9.5 Financial Consideration Conclusions

On the basis of its review of the financial status of UFTR as described above, the NRC staff concludes that there is reasonable assurance that the necessary funds will be available to support the continued safe operation of UFTR facility during the renewal period and, when necessary, to shut down the facility and to carry out decommissioning activities. The NRC staff finds that the UFTR license can be renewed as a Section 104.c license because it is a 10 CFR 50.21(c) facility that is useful in the conduct of research and development activities. The NRC staff also finds that the applicable provisions of 10 CFR Part 140 have been satisfied and that the licensee is financially qualified to engage in the activities authorized by the renewed facility operating license in accordance with the rules and regulations of the NRC. Based on its review, the NRC staff concludes there are no foreign ownership, control, or domination issues or insurance issues that would preclude the issuance of a renewed license and that licensee is financially qualified to engage in licensed activities during the renewal period.

1.10 Facility Operating License Possession Limits and License Changes

The renewal of Facility Operating License No. R-56 for the UFTR authorizes the receipt, possession, and use of special nuclear and byproduct materials. SNM consists of such material as the uranium-235 in the reactor fuel; SNM in fueled experiments, fission chambers, fission plates, foils, solutions, the plutonium-beryllium neutron startup source; and SNM produced by operation of the reactor. Byproduct material consists of such material as activation and fission products produced by operation of the reactor in the fuel and fueled experiments, and activation products in non-fueled experiments, and reactor structure and in the americium-beryllium neutron startup source. A general description of the site and of the facility is provided in TS 5.1 (Ref. 26), SAR Sections 1.3 and 2.2.1.2 (Ref. 26), and all activities performed within these areas fall under the jurisdiction of the reactor license. The UFTR experimental facilities located within the area under the jurisdiction of the reactor license are referenced in SAR Chapter 10 and SAR Section 1.3 (Ref. 26). According to the licensee (Ref. 24), there are no exclusion areas or permanent fixed restricted areas at the UFTR facility. Restricted areas are established, as needed, based upon the requirements of 10 CFR Part 20. The NRC inspection program has shown that the licensee has procedures and equipment to safely handle licensed material within the licensed area.

The NRC staff reviewed the current UFTR facility operating license and discussed with the licensee whether changes to possession limits were requested for license renewal. The licensee subsequently requested an increase in possession limits via an e-mail from the UFTR staff on October 4, 2016 (Ref. 69). The licensee requested a change in the possession limit for Facility Operating License No. R-56, License Condition (LC) 2.B.(2), to allow up to 39 grams of plutonium (Pu) in the form of sealed plutonium beryllium (Pu-Be) neutron sources. The NRC staff noted that the current LC allowed for a 1-curie sealed Pu-Be neutron source, which the NRC staff will express as a quantity in grams in the renewed license. The licensee's request would result in an increase in the potential total amount of SNM by less than 20 grams. The licensee states that a total Pu possession limit of 39 grams would be sufficient to allow the licensee to procure a replacement for their aging Pu-Be source while maintaining possession of the old source until it can be properly disposed. The NRC staff reviewed the information

provided and finds that an increase in the possession limit to up to 39 grams of Pu does not change the security classification category of the facility, as described in 10 CFR Part 73, and does not represent an increased risk to public or facility safety. Based on the information described above, the NRC staff concludes that a total Pu possession limit of 39 grams is acceptable.

As is current practice, the NRC staff added to LC 2.B.(2), a clause to prohibit the separation of SNM and to clarify the byproduct material possession requirements to prevent the separation of byproduct material. The NRC staff notes that the licensee doesn't have or need the ability to separate byproduct material. This reflects the current wording acceptable to the NRC staff to help ensure that the licensee does not engage in activities associated with production facilities. Additionally, the NRC staff made formatting changes to the LCs to make them easier to read and understand. The changes to the license were reviewed and accepted by the licensee (Ref. 86). Based on the review, as discussed above, and the acceptable results of the NRC inspection program, the NRC staff concludes that the licensee has procedures and equipment in place to safely receive, possess, and use the materials authorized by the facility operating license, including the noted increase for Pu.

2. REACTOR DESCRIPTION

2.1 Summary Description

2.1.1 Introduction

The licensee provides a description of the University of Florida Training Reactor (UFTR) in Section 4.1.1 of the safety analysis report (SAR). The UFTR facility houses a modified Argonaut-type reactor, a light-water and graphite-moderated, graphite-reflected, light-water-cooled reactor as described in Chapter 4 of the UFTR SAR. The Argonaut design uses materials testing reactor (MTR)-type fuel plates arranged into assemblies. These assemblies are then placed into a rectangular grid as illustrated in Figure 2-1 (reproduced from Figure 4-7 of Ref. 4). This fuel coolant channel then becomes part of the core as the coolant channels and the associate fuel assemblies are added to the core configuration. Figure 2-2 illustrates how this core configuration is then finalized by layering the graphite blocks, concrete shield blocks, and the other associated components (reproduced from Figure 4.1 of Ref. 9) around the core.

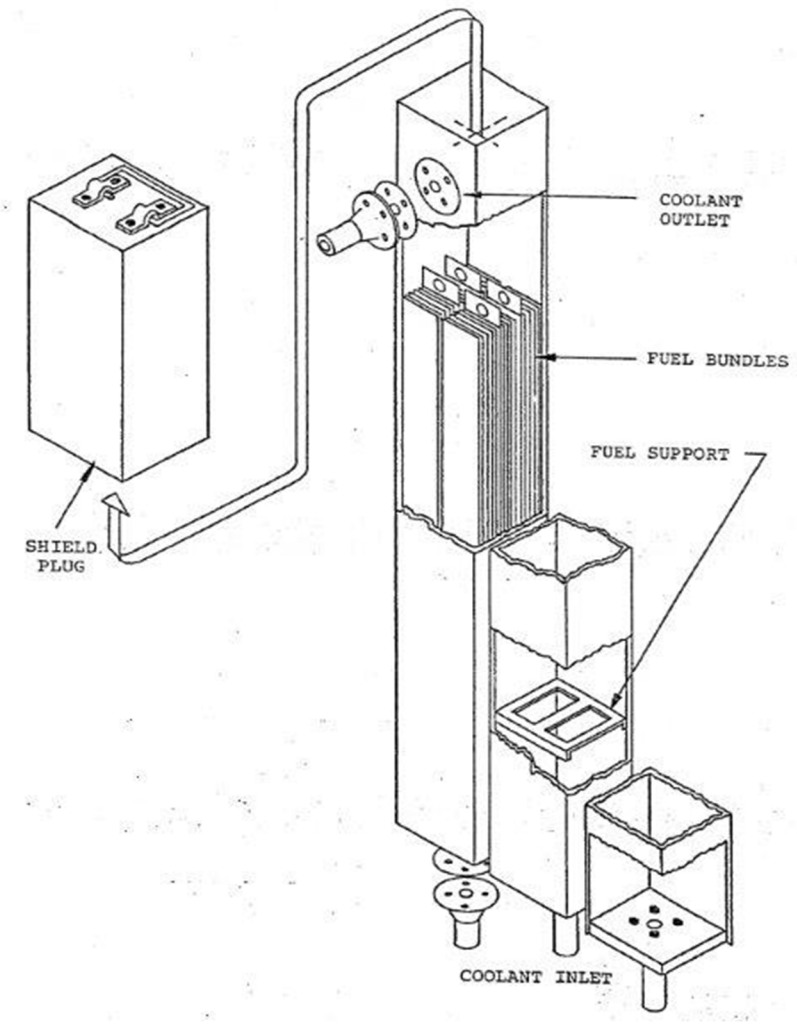

Figure 2-1 Fuel Box and Coolant Channel

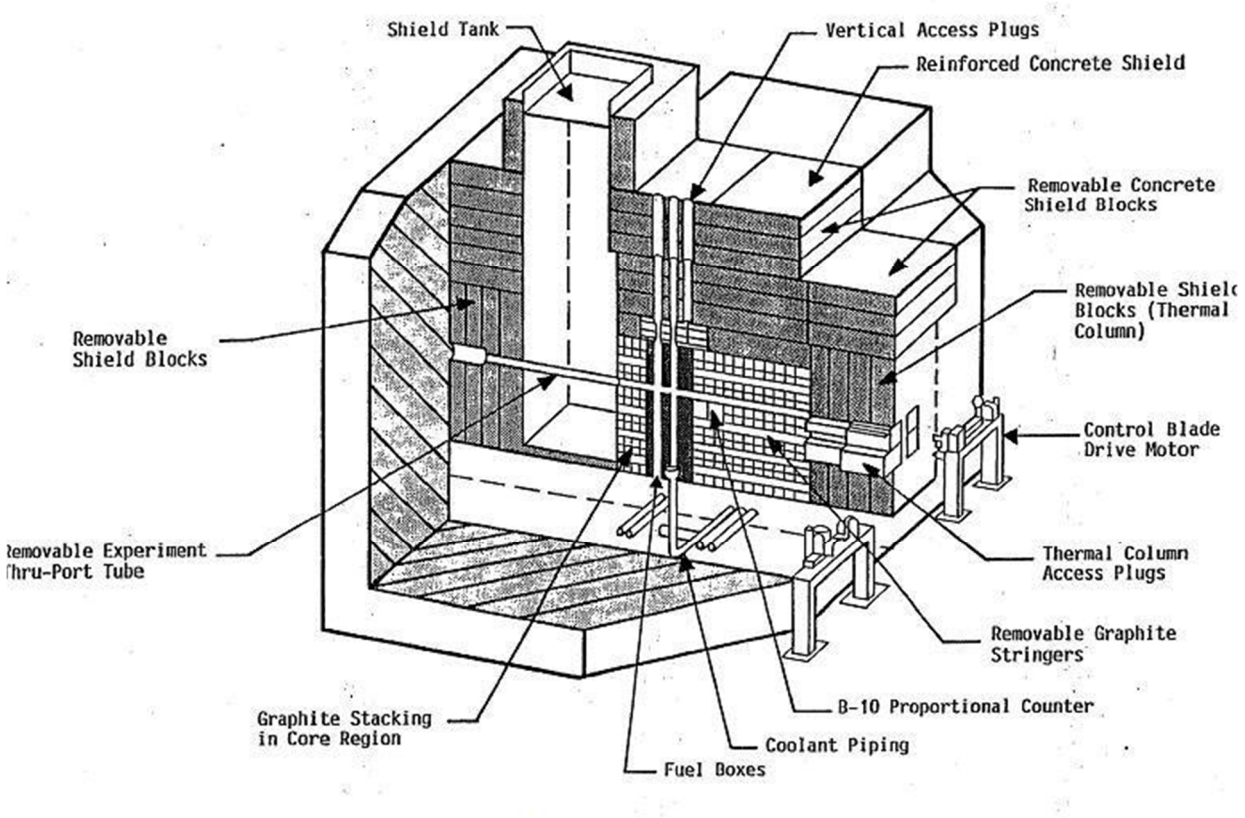

Figure 2-2 Argonaut Reactor Cutaway

The fuel assemblies are contained in six aluminum boxes arranged in two parallel rows of three boxes each, separated by about 30 centimeters (cm) of graphite. The fuel boxes are surrounded by a 5-ft by 5-ft by 5-ft reactor-grade graphite assembly within the reinforced concrete shield. Primary coolant (demineralized water) is pumped upward in a closed loop through the fuel boxes and between the fuel plates (the coolant channel) and then fed by gravity through side orifices to the primary heat exchanger, where heat from the reactor is transferred to the secondary coolant system.

The reactor is equipped with four swing arm-type control blades (three safety blades and one regulating blade), each consisting of a cadmium vane protected by a magnesium shroud. The control blades operate by moving in a vertical arc within the spaces provided between the fuel boxes. Each of the four control blades is moved into and out of the core by its individual rotating mechanical drive shaft coupled to an electric drive motor through an electromagnetic clutch. The control blades may also be inserted into the reactor core by de-energizing the current flow to the electromagnetic clutch (scram). This decouples the control blades from their mechanical drives and allows them to be fully inserted by gravity into the reactor. The control blade drive mechanisms are located outside of the reactor shield to provide accessibility for maintenance.

2.1.2 UFTR Modes

The licensee describes the state of the reactor in the TSs by using five modes. These modes are used to describe the applicability of TSs to facility activities. The five modes are summarized below, paraphrased from the definitions in the UFTR TSs, as follows:

Mode 1 - Reactor operation at greater than or equal to one percent rated thermal power (RTP).

Mode 2 - Reactor operation at less than one percent RTP, but not in Modes 3, 4, 5.

Mode 3 - The reactor is shut down and is subcritical by at least 760 percent millirho (pcm) with the core at ambient temperature with the reactivity worth of xenon equal to zero and with the reactivity worth of all installed experiments included.

Mode 4 - The reactor is secured when, with fuel present in the reactor, there is insufficient water moderator available in the reactor to attain a effective neutron multiplication factor (k_{eff}) greater than 0.8 or there is insufficient fuel present in the reactor under optimum available conditions of moderation and reflection to attain a k_{eff} greater than 0.8 or the reactor is shutdown with all control blades fully inserted; and the following conditions exist:

a. the console key switch is in the OFF position and the key is removed from the switch; and
b. no work is in progress involving fuel, core structure, installed control blades, or control blade drives unless they are physically decoupled from the control blades; and
c. no experiments are being moved or serviced that have, on movement, a reactivity worth exceeding 720 pcm.

Mode 5 - The reactor is in an outage condition with less than two layers of concrete block shielding fully installed over the top of the core area with fuel in the core.

The UFTR modes, as defined in TS 1.2, are reviewed and found acceptable in Section 7.1 of this SER.

2.1.3 Summary of Reactor Data

The licensee discusses the UFTR design and performance characteristics in Section 4.1.2 of the reconstituted SAR. Table 2-1 summarizes the UFTR design parameters, as documented in Chapter 4 of the UFTR SAR (Refs. 3 and 9), as supplemented by RAI responses (Ref. 27).

The following definitions from the UFTR TSs (Ref. 27) delineate the reactor core and reactivity conditions as follows:

TS 1.2 Definitions

(…)

CORE CONFIGURATION: Core configuration shall include the number, type, or arrangement of fuel assemblies, graphite moderator elements, experimental locations, and control blades occupying the core region.

(…)

EXCESS REACTIVITY: Excess reactivity shall be that amount of reactivity that would exist if all control blades were moved to the maximum reactive condition from the point where the reactor is exactly critical (k_{eff} = 1). When calculating excess reactivity, no credit shall be taken for negative experiment worth, temperature effects or xenon poisoning.

(…)

SHUTDOWN MARGIN: Shutdown margin is the minimum shutdown reactivity necessary to ensure the reactor can be made subcritical by means of the reactor control and trip systems starting from any permissible operating condition with the most reactive blade in its most reactive position and that the reactor will remain subcritical without further operator action. When calculating shutdown margin, no credit shall be taken for negative experiment worth, temperature effects or xenon poisoning.

These are standard definitions used in research reactor TSs or modified facility-specific definitions appropriate for the Argonaut design, which the NRC staff finds to be consistent with the guidance in NUREG-1537, "Guidance for Preparing and Reviewing Applications for the Licensing of Non-Power Reactors," issued February 1996 (Ref. 51) and ANSI/ANS-15.1-2007, "The Development of Technical Specifications for Research Reactors" (Ref. 55). Thus, the NRC staff concludes that the licensee's TS definitions for reactor core and reactivity conditions are acceptable.

Table 2-1 Summary of Nominal Design Parameters of the UFTR

General Feature	Value
Reactor Type	Heterogeneous, thermal
Licensed Rated Thermal Power Level	100 kilowatt thermal (kWt)
Startup Source	SbBe ≤ 25 Ci or PuBe ≤ 1.0 Ci
Reflector	Graphite (1.6g/cm^3)
Moderator	H_2O and graphite
Fuel Type	U_3Si_2-Al
Cladding	6061 Al
Cladding Thickness (cm)	0.038
Fuel Enrichment (nominal)	19.75%
Meat Composition (wt% uranium)	62.98
Number of Plates per Fuel Assembly	14
Number of Full Fuel Assemblies in Core	22
Number of Partial Fuel Assemblies in Core (10 Fuel + 4 Aluminum Plates)	0
Number of Dummy Assemblies in Core	2

General Feature	Value
Shield	
Sides, Center	6 feet (ft) cast, barytes concrete
Sides, Ends	6 ft, 9 inches, cast barytes concrete
Middle	Barytes concrete blocks
Top	5 ft, 10 inches concrete blocks
End	3 ft, 4 inches concrete blocks
Experimental Facilities	
Thermal Column, Horizontal	60 inches × 60 inches × 56 inches
Thermal Column, Vertical	2 ft diameter × 5 ft; H_2O or D_2O
Shield Test Tank	5 ft × 5 ft × 14 ft high
Experimental Holes	5 vertical, 4 inches × 4 inches 3 vertical, 1-1/2 inches
Foil Slots	16 vertical, 3/8 inch × 1.0 inch

Table 2-2 summarizes the UFTR performance parameters as documented in Chapter 4 of the UFTR SAR (Ref. 3 and 9), as supplemented by RAI responses (Refs. 24−27).

Table 2-2 Summary of Performance Parameters of the UFTR

REACTOR PARAMETERS	Calculated	Measured
Fresh Core Excess Reactivity (pcm)	539	600
Shutdown Margin (pcm)	3441	3290
Control Blade Worth (for low enriched uranium (LEU) 22 Assemblies at Beginning of Life)		
Regulating (pcm)	773	760
Safety 1 (pcm)	1414	1400
Safety 2 (pcm)	1793	1730
Safety 3 (pcm)	1841	1900
KINETICS PARAMETERS	Beginning of Life	End of Life
α_{void} (pcm/%void) (0 to 5% void)	-125	-94
α_{void} (pcm/%void) (5 to 10% void)	-140	-106
α_{water} (pcm/°C) (21 to 99°C)	-6.7	-4.8
α_{fuel} (pcm/°C) (21 to 127°C)	-1.9	-1.7

α_{fuel} (pcm/°C) (21 to 227°C)	-1.7	-1.6
Effective Delayed Neutron Fraction (pcm)	741	739
Prompt Neutron Lifetime (μs)	198.5	203.4
THERMAL-HYDRAULIC PARAMETERS		
Maximum Fuel Temperature (°C)	73.6	
Maximum Clad Temperature (°C)	73.5	
Maximum Coolant Channel Outlet Temperature (°C)	71.5	
Minimum Departure From Nucleate Boiling Ratio (DNBR)	463	
Minimum Onset of Nucleate Boiling Ratio (ONBR)	1.540	

2.2 Reactor Core

The licensee discusses the UFTR core in Section 4.2 of the UFTR SAR. The reactor core consists of the fuel assemblies, control blades, and the related internal equipment. This section discusses the major core components and the associated TSs for the UFTR reactor core.

TS 5.3.1, which applies to Modes 1 through 5, specifies the reactor core design features which if altered could affect safety:

TS 5.3.1 Reactor Core Design

Specification:

1. The reactor core shall contain six aluminum fuel boxes, containing up to four fuel assemblies each, arranged in two parallel rows of three boxes each, and separated by about 30 cm of graphite.

2. The reactor core shall contain four scrammable control blades of swing-arm type consisting of aluminum vanes tipped with cadmium, protected by magnesium shrouds.

3. The reactor core shall contain the surrounding graphite assembly that measures about 5’ x 5’ x 5’.

4. The reactor core shall contain experimental locations to include three vertical columns and one horizontal throughport.

TS 5.3.1.1 through TS 5.3.1.4 apply for Modes 1 through 5 as defined in the UFTR TS. In TS 5.3.1, the reactor core equipment content requirements are specified for all allowed modes. These specifications help to ensure that the assemblies of the core configuration required in all modes are consistent with the configurations assumed in the transient and accident analysis discussed in Chapter 6 of this SER. The NRC staff finds that these modes are allowed by the guidance in ANSI/ANS-15.1-2007 and the equipment configurations cited are consistent with the transient and accident analysis presented by the licensee in the SAR and RAI responses. On the basis of this information, the NRC staff concludes that TS 5.3.1 is acceptable.

2.2.1 Reactor Fuel

According to SAR Sections 4.1.2 and 4.2.1, the UFTR fuel plates nominally contain 19.75-percent enriched uranium. Each fueled plate consists of a sandwich of aluminum cladding mechanically bonded to the U_3Si_2-Al "meat" (fuel material). The UFTR uses MTR-type fuel plates with characteristics as listed previously in Table 2-1.

Each fully loaded fuel assembly contains 14 or less fuel plates. Mechanical integrity is maintained by grid straps and spacers which also ensure uniform primary coolant flow. A fuel assembly may have less than 14 fuel plates (partial dummy or fuel assembly); it may also have no fuel plates, as would be the case if "dummy" assemblies are used. Note that in the UFTR SAR, the terms "assembly," element, and "bundle," are used interchangeably and, by reference, may also be used interchangeably in this SER.

The fuel assemblies are inserted vertically into a fuel box with each box containing four assemblies. In order to achieve the desired excess reactivity capability in the reactor core, pairs of partial assemblies may be placed among the full fuel assemblies in the core. A partial assembly is composed of either all dummy or all fueled plates. The combining of the pair of partial assemblies forms one full assembly containing a total of 13 plates (the union of the two partials takes up the space of the 14th plate). A given fuel box may contain any combination of full fuel, part fuel/part dummy, and dummy assemblies, so long as there are no less than 22 full fuel assemblies in the reactor core. A dummy assembly is composed of 14 dummy fuel plates. The dummy fuel plates are made of solid aluminum. The partial and dummy assemblies have the same flow characteristics as a fuel assembly. As described in SAR Section 4.1.1, the UFTR core is presently comprised of 22 full fuel assemblies, 2 dummy assemblies and no partial assemblies, which is also the limiting core configuration for SAR Chapter 13 analyses.

The reactor core has one row of three fuel boxes on each side of the throughport, as illustrated in Figure 2-3. During operation, the fuel boxes are filled with water. The water acts as both a coolant and a moderator. The fuel boxes are also surrounded by graphite reflector blocks. The orientation of the fuel assemblies into the UFTR fuel box grid is illustrated in Figure 2-4 (reproduced from SAR Figure 4.19). As discussed in SAR Section 4.2.1, there are 22 full fuel assemblies and 2 dummy assemblies for the 22-assembly core or limiting core configuration (LCC). Each full fuel assembly contains 14 fuel plates. The two dummy assemblies, 3-2 and 6-4, contain 14 dummy plates. Figure 2-4 shows the pattern of the fuel and dummy assemblies

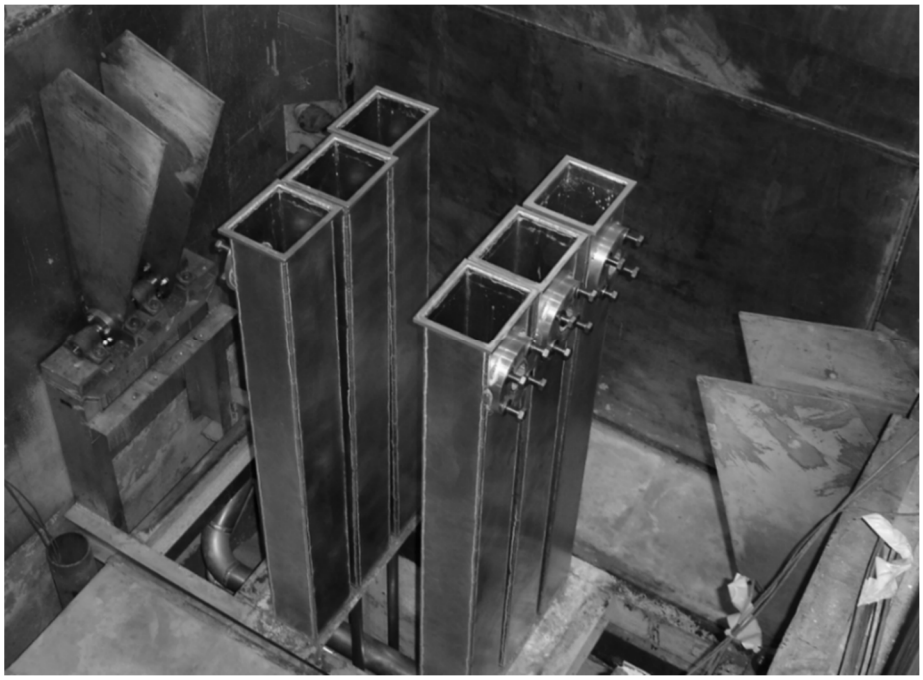

Figure 2-3 Empty Fuel Boxes Showing Control Blades Withdrawn

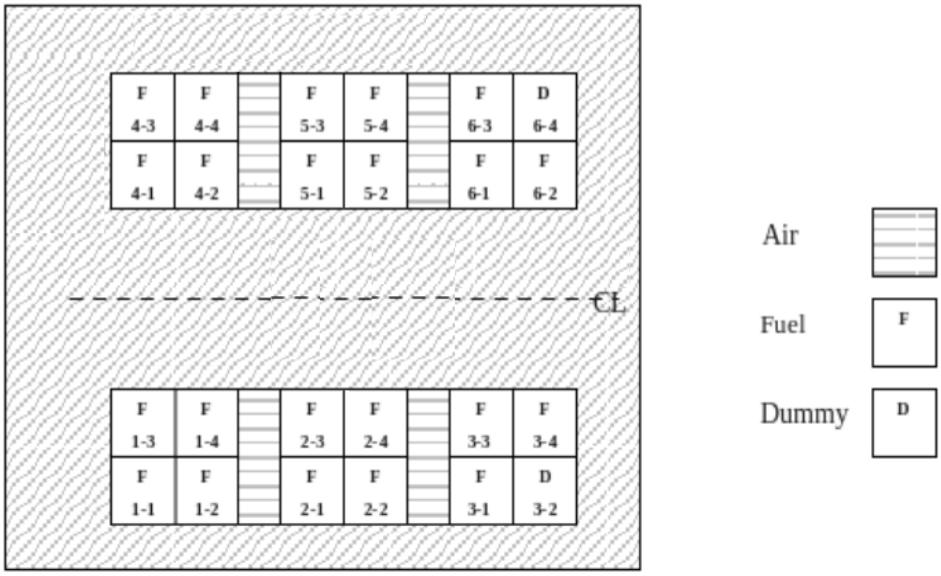

Figure 2-4 Assembly Orientation within Fuel Boxes

TS 5.3.2 applies to the reactor core fuel loading to help ensure the operational reactor core is loaded as intended and contains no fewer full fuel assemblies than the limiting core configuration and that the operational fuel loading remains bounded as described in SAR Chapters 4 and 13.

TS 5.3.2 Reactor Core Fuel Loading

Specification: According to Table 5.3.2-1.

Table 5.3.2-1
Fuel Loading Limitations

	FUEL LOADING LIMIT	APPLICABILITY
1.	The reactor core shall contain no less than 22 full fuel assemblies and shall be loaded so that all fuel assembly positions are occupied	MODES 1 and 2
2.	The reactor core shall contain up to 24 full fuel assemblies of 14 plates each	MODES 1 through 5
3.	Full assemblies in the reactor core may be replaced with pairs of partial assemblies	MODES 1 through 5
4.	A partial assembly in the reactor core shall be composed of either all dummy or all fueled plates	MODES 1 through 5
5.	A pair of partial assemblies in the reactor core shall contain 13 plates	MODES 1 through 5

TS 5.3.2.1 helps ensure that the reactor core consists of the proper number of MTR-type fuel assemblies. MTR cores have been in use for years and their characteristics are well documented. TS 5.3.2.2 through TS 5.3.2.5 help ensure that only the proper composition of MTR-type fuel assemblies are authorized to be used in the UFTR. This design feature information is important to help ensure that the operational fuel loading remains bounded by the limiting core configuration described in SAR Chapters 4 and 13 and are approved for use.

The NRC staff finds that TS 5.3.2 characterizes the UFTR design features for the reactor core and helps ensure that the reactor core loading conforms to and is limited to the analysis provided in the UFTR SAR (Ref. 9). The NRC staff finds that TS 5.3.2 is consistent with the guidance in NUREG-1537 and helps ensure that the UFTR will be operated consistent with the design criteria for the reactor core. Based on the information provided above, the NRC staff concludes that TS 5.3.2 is acceptable.

TS 5.3.3 applies to the fuel design used in the UFTR reactor core to specify the proper reactor fuel type and burnup limit.

TS 5.3.3 Reactor Fuel Design

Specification:

1. Fuel assemblies installed in the core shall be of the general MTR type, with thin fuel plates clad with aluminum 6061 and containing uranium silicide-aluminum (U_3Si_2-Al) fuel meat enriched to no more than about 19.75% U-235.

2. Fuel assembly burnup shall not exceed 50% of its initial U-235 content.

TS 5.3.3.1 is applicable during all modes and establishes the requirements for the fuel type in use in the UFTR. This specification requires the use of MTR-type silicide LEU fuel. This specification helps to control the fuel type used so that the analysis in the SAR is consistent with the fuel design. The NRC staff finds that this specification is consistent with the fuel approved for use by the HEU to LEU fuel conversion in Amendment No. 26 (Ref. 6). On the basis of this information, the NRC staff concludes that TS 5.3.3.1 is acceptable.

TS 5.3.3.2 is applicable during all modes and establishes the fuel burnup requirement for fuel assemblies in UFTR. This specification helps to provide a basis for fuel dimensions that are used in analysis to ensure that they support the fuel in use. The NRC staff finds that this specification is consistent with the fuel approved for use in Amendment No. 26 (Ref. 6) and that fuel burnup is limited to within the accepted evaluation limits of NUREG-1313, "Safety Evaluation Report related to the Evaluation of Low-Enriched Uranium Silicide-Aluminum Dispersion Fuel for use in Non-Power Reactors" (Ref. 70). On the basis of this information, the NRC staff concludes that TS 5.3.3.2 is acceptable.

The NRC staff finds that TS 5.3.3.1 and TS 5.3.3.2 acceptably state the fuel vendor's design features and the enrichment allowed by previous regulatory actions as they apply to the UFTR. On the basis of this information, the NRC staff concludes that TS 5.3.3 is acceptable.

In order to ensure fuel plate integrity, the following safety limit is specified for the fuel and cladding temperature:

TS 2.1 Safety Limit

Specification: The fuel and cladding temperatures shall not exceed 986°F (530°C).

TS 2.1 establishes the safety limit (SL), which is a requirement that under no condition of operation (Mode 1 and 2) shall the fuel and cladding temperature exceed the stated value of 986 degrees Fahrenheit (°F) (530 degrees Celsius (°C)). The SL is based on testing that was performed during fuel development. This specification establishes the limit for acceptable operations. The licensee states in the basis that this limit is adopted from NUREG-1313 (Ref. 70). According to NUREG-1313, the fuel design used by the UFTR retains most mixed fission products and reduces the leakage of halogens and noble gases. Swelling of the fuel in tests conducted to a high burn-up was found to be negligible. Blister resistance for U_3Si_2-Al fuel is such that a fission product release is not expected until fuel cladding temperatures reach above 530 °C. Furthermore, the evaluation in NUREG-1537, Part 1, Appendix 14.1, Section 2.1 accepts the evaluations in NUREG-1313. On the basis of this information, the NRC staff concludes that TS 2.1 is acceptable.

In response to RAI 4-2 (Ref. 24), the licensee states that to avoid the unexpected corrosion found in another Argonaut reactor with the same type of LEU fuel plates as the UFTR (the UTR-10 at Iowa State University), the fuel vendor applies a surface treatment that results in a protective boehmite layer on the surface of the cladding. To further support the prevention of fuel cladding corrosion, the conductivity of the demineralized water used for the reactor primary coolant is controlled per TS 3.3.2, which is applicable whenever reactor coolant system water is in contact with fuel assemblies. Additionally, the licensee verifies electrical resistivity of the reactor coolant system water is within the limit daily, whenever reactor coolant system water is in contact with fuel assemblies, per Surveillance Requirement (SR) 3.3.2. The resistivity limit is designed to minimize fuel assembly corrosion. The licensee states that monitoring reactor

coolant resistivity also provides for early indication of any potential fission product release. TS 3.3.2 and SR 3.3.2 are reviewed and found acceptable in Section 3.2 of this SER.

The following definitions from the UFTR TSs outline the parameters for damaged or defective fuel as follows:

TS 1.2 Definitions

(…)

DAMAGED FUEL: A fuel assembly shall be identified as damaged if the cladding is breached resulting in fission product release or if visual inspection of the fuel indicates cladding blistering, excessive swelling, excessive bulging, excessive deformation, cladding holes, cladding tears, or cladding breaches of any kind.

(…)

FUEL DEFECT: A fuel defect shall be any unintended change in the physical as-built condition of the fuel with the exception of normal effects of irradiation (e.g., elongation due to irradiation growth or assembly bow) that do not render the fuel inoperable. Examples include unusual pitting, unusual bulging, missing or broken bolts, missing or broken spacers, missing or broken combs, missing or broken welds, or unusual corrosion.

The NRC staff reviewed the above definitions for damaged and defective fuel. The NRC staff finds that these are standard definitions used in research reactor TSs and are consistent with NUREG-1537 and ANSI/ANS-15.1-2007. Based on the information provided above, the NRC staff concludes that these definitions pertaining to the fuel are acceptable.

To ensure that the fuel is operated in accordance with the analysis in the SAR, the licensee has established TS pertaining to the fuel and handling the fuel.

TS 3.9.2 Fuel and Fuel Handling

Specification: According to Table 3.9.2-1.

Table 3.9.2-1
Fuel and Fuel Handling Limitations

	LIMITING CONDITION	APPLICABLE MODES	SURVEILLANCE REQUIREMENTS
1.	The reactor shall not be operated with DAMAGED FUEL in the core except to locate the damaged in-core fuel	1, 2	SR 3.9.2.1 SR 3.9.2.2
2.	At least two layers of concrete block shielding shall remain fully installed over the core area until a minimum of 30 days have passed since the last operation in MODES 1 or 2	5	SR 3.9.2.3

SURVEILLANCE REQUIREMENTS

	SURVEILLANCE	FREQUENCY
SR 3.9.2.1	Reactor coolant water shall be sampled and evaluated for indications of DAMAGED FUEL	Weekly
SR 3.9.2.2	Verify the integrity of all in-core reactor fuel assemblies by visual inspection. DAMAGED FUEL assemblies and assemblies with FUEL DEFECTS shall be removed from the core	10 years
SR 3.9.2.3	Verify a minimum of 30 days have passed since last operation in MODES 1 or 2	Prior to MODE 5 entry

TS 3.9.2.1 establishes the requirement that the reactor shall not be operated with damaged fuel in the core, except to locate the damaged fuel assemblies. This specification helps to ensure that the reactor does not operate with fuel that is releasing fission products into the primary coolant. It is common that fuel defects that release fission products are only detectable during reactor operation. SR 3.9.2.1 establishes a requirement for the reactor coolant water to be sampled and evaluated periodically for indications of damaged fuel. The NRC staff finds that TS 3.9.2.1 and SR 3.9.2.1 are consistent with the guidance in NUREG-1537, Appendix 14.1. On the basis of this information, the NRC staff concludes that TS 3.9.2.1 and SR 3.9.2.1 are acceptable.

SR 3.9.2.2 establishes the requirement to inspect all in-core reactor fuel assemblies every 10 years and remove damaged or defective fuel assemblies from the core. The entire core was replaced during the HEU-LEU conversion in 2006. Neither NUREG-1537, nor ANSI/ANS-15.1-2007, provide specific guidance regarding SRs for plate fuel. However, the NRC staff finds that this SR helps to ensure that degradation will be detected and that the period of surveillance is reasonable given the power level and design of the reactor. On the basis of this information, the NRC staff concludes that SR 3.9.2.2 is acceptable.

TS 3.9.2.2 and SR 3.9.2.3 establish the requirement that at least two layers of concrete block shielding shall remain in place for at least 30 days after the last operation in Mode 1 or Mode 2 to limit fission product inventory before moving shielding blocks. The TS 3.9.2.2 restriction to Mode 1 or Mode 2 helps ensure reactor operation does not significantly contribute to the buildup of fission products. The basis states that this is to ensure that the actual fuel fission product inventory remains bounded by the conservative calculated fission product inventory provided in SAR Section 13.2 of the accident analysis. This also reduces the potential for personnel exposure that could occur during fuel handling operations. The NRC staff finds that this is an appropriate precaution that implements the licensee's ALARA goal, per SAR Section 11.1.3, and is also consistent with the assumptions used in the fuel handling accident (FHA) and maximum hypothetical accident in the UFTR SAR, Section 13.2 (Ref. 26). This is discussed further in Section 6.1 of this SER. On the basis of this information, the NRC staff concludes that SR 3.9.2.2 is acceptable.

Based upon a review of the information provided by the licensee for the reactor fuel, the NRC staff concludes that:

- The licensee has described in sufficient detail the fuel plates to be used in the reactor. The discussion includes the SL of the fuel plates and provides the technological and safety-related bases for the limits.

- The licensee has discussed the materials used to construct the components for the fuel plates. Compliance with these specifications will ensure uniform characteristics and compliance with design bases and safety requirements.

- The licensee has referred to the fuel development program under which all fuel characteristics and parameters that are important to the safe operation of the reactor are investigated. The design limits are clearly identified for use in design bases to support technical specifications (i.e., NUREG-1313).

- Information on the design and development program for this fuel offers reasonable assurance that the fabricated fuel can function safely in the reactor without adversely affecting the health and safety of the public.

2.2.2 Control Blades

Four swing arm-type control blades (three safety blades and one regulating blade) all have scram capability to provide reactivity control for the UFTR as specified by TS 5.3.1.2.

TS 5.3.1 Reactor Core Design

Specification:

(…)

2. The reactor core shall contain four scrammable control blades of swing-arm type consisting of aluminum vanes tipped with cadmium, protected by magnesium shrouds.

(…)

As described in SAR Section 4.2.2, each blade consists of an aluminum vane tipped with cadmium protected by a magnesium shroud to ensure mechanical stability during movement and to isolate the poison from the core water environment. The control blades operate by moving in an arc within the spaces provided between the fuel boxes. Each of the four control blades is moved into and out of the core by its individual rotating mechanical drive shaft coupled to an electric drive motor through a reduction gear train and an electromagnetic clutch that engages the control blade assembly. The control blades are maintained in position as long as they remain coupled to their drive motor via the energized electromagnetic clutch. The control blades are also inserted into the reactor core by deenergizing the current flow to the electromagnetic clutch (by operator action, a reactor protection system reactor trip signal, or a loss of alternating current (ac) power) as discussed in SAR Section 7.2.1. This decouples the control blades from their mechanical drives and allows the control blades to fully insert by gravity into the reactor core. Control blade motion is limited to a removal time of at least

100 seconds as analyzed in SAR Section 4.5.2.2, and the insertion time under reactor trip conditions is measured to be less than “0.5 - 0.6 seconds,” as described in the response to RAI 4-3 (Ref. 24). The control blade drive mechanisms are located outside of the reactor shield to provide accessibility for maintenance, as previously illustrated in Figure 2 2.

As described in SAR Section 7.2.1, the control blade position indicators, mechanically geared to the control blade drives, transmit blade position information to the reactor console, where it is displayed for the operator. The operator adjusts control blade position from four sets of pushbutton controls, one set for each control blade, at the reactor console. The automatic control system can be used to adjust the position of the regulating blade automatically to hold the reactor power at a selected steady power level during extended reactor operation, as described in SAR Section 7.2.3. The system may also be used to make minor power adjustments within the maximum range of the switch settings. When the automatic mode of reactor control is selected, the manual mode of operation is disabled.

The NRC staff finds that the material characteristics in TS 5.3.1.2 will help ensure that the important aspects of the design of the control rods are maintained, and will help ensure that the control rods will perform their safety function. TS 5.3.1.2 describes the important aspects of the design of the standard control blade to ensure they will perform their safety function. Based on the information above, the NRC staff concludes that TS 5.3.1.2 is acceptable.

TS 3.2.1 Control Blades

Specification: According to Table 3.2.1-1.

Table 3.2.1-1

Control Blade Limitations

	LIMITING CONDITION OR FUNCTION	ALLOWABLE CONDITION OR VALUE	SURVEILLANCE REQUIREMENTS
1.	Individual control blade drop times from initiation of trip signal to full insertion as measured from the fully withdrawn position for each of the four control blades	≤ 2.0 seconds	SR 3.2.1.1
2.	Reactivity insertion rate due to control blade withdrawal	≤ 74 pcm/second	SR 3.2.1.2 SR 3.2.1.3
3.	Control blade withdrawal	Neutron count rate ≥ 2 counts/second	SR 3.2.1.4
4.	Control blade withdrawal	Reactor Period > 10 seconds	SR 3.2.1.5

SURVEILLANCE REQUIREMENTS

	SURVEILLANCE	FREQUENCY
SR 3.2.1.1	Verify each control blade drop time is within limit	Annual
SR 3.2.1.2	Verify control blade reactivity worths	Annual [(a)]
SR 3.2.1.3	Verify reactivity insertion rate is within limit	Annual [(a)]
SR 3.2.1.4	Verify proper inhibit function when neutron count rate is less than 2 counts/second	Daily
SR 3.2.1.5	Verify proper inhibit function	Daily

(a) These reactivity parameters shall also be verified following changes in CORE CONFIGURATION.

TS 3.2.1.1 establishes the requirement for control blades to insert within 2 seconds of receiving a reactor scram demand - automatic or manual. This TS requires that all of the control rods be operable in MODE 1 and 2. The guidance in NUREG-1537, Appendix 14.1, Section 3.2, states that scram times greater than 1 second shall be justified by analysis in the SAR. This specification controls the rate of negative reactivity addition from the control blades to the reactor. The increase of control rod drop time from 1.0 second to 1.5 seconds was previously analyzed for the HEU-LEU fuel conversion. The Reactor Excursion and Leak Analysis Program (RELAP5-3D) analyses for the conversion showed that this 0.5 second increase in the rod drop time for both rapid and slow reactivity addition accidents had a negligible impact on the maximum fuel and clad temperatures. In Section 6.2 of this SER, the comprehensive reactivity insertion analysis provided by the licensee is reviewed. In that review, the NRC staff concludes that the ramp analysis, which assumes a blade drop time of 3 seconds, provides an appropriate basis for the acceptance of the UFTR control blade drop time of less than or equal to 2 seconds as stated in TS 3.2.1.1.

SR 3.2.1.1 establishes the requirement to verify blade drop time. This frequency is consistent with the guidance in NUREG-1537. This SR helps ensure that the operability of the control blades is maintained. Additionally, TS 3.0.2, discussed in Section 7.3 of this SER, provides that all four control blades must be operable for entry into MODE 1 or 2, since failure to meet any of the associated SR for TS 3.2.1, whether such failure is experienced during the performance of the surveillance or between performances of the surveillance, are deemed a failure to meet the associated LCO. TS 3.0.2.4 requires testing of the control blades after any replacement, repair, or modification. On the basis of the above information, the NRC staff concludes that TS 3.2.1.1 and associated SR 3.2.1.1 are acceptable.

TS 3.2.1.2 and the associated SR 3.2.1.2 and SR 3.2.1.3 establish a maximum limit for reactivity insertion due to control blade withdrawal. In Section 6.2 of this SER, the reactivity insertion analysis provided by the licensee is reviewed. In that review, the NRC staff concludes that the ramp analysis, which assumes the TS 3.2.1.2 limit of 74 pcm/second, does not result in fuel heat up or cause actuation of the primary system rupture disc. SR 3.2.1.2 validates the control blade design for the UFTR includes reactivity worth that can control the excess reactivity planned for the UFTR, including the assurance of an acceptable shutdown reactivity and margin. The NRC staff finds that TS 3.2.1.2 and the associated SRs establishes appropriate

limiting conditions for operation (LCO) and SRs for the control blades. On the basis of the above information, the NRC staff concludes that TS 3.2.1.2 and associated SR 3.2.1.2 and SR 3.2.1.3 are acceptable.

TS 3.2.1.3 and TS 3.2.1.4 provide the interlocks to inhibit blade withdrawal unless neutron count rate greater than or equal to 2 counts/second and reactor period is less than 10 seconds. TS 3.2.1.3 and TS 3.2.1.4 and the associated, SR 3.2.1.4 and SR 3.2.1.5 are discussed and found acceptable in Section 4.2.3 of this SER.

Based on a review of the information provided by the licensee, the NRC staff concludes that:

- The licensee has described the control blades for the reactor and included a discussion of the design bases, which are consistent with the operational characteristics of the reactor. All functional and safety design bases are achieved by the control blade design as described in the SAR.

- The licensee has included information on the materials, components, and fabrication specifications of the control blades. These descriptions offer reasonable assurance that the control blades conform with the design bases.

- Maximum scram times and maximum rates of insertion of positive reactivity for normal and ramp insertions caused by system malfunctions are considered and limited by the TSs.

- The licensee has justified appropriate design limits, LCOs and SRs for the control blades and included them in the TSs.

Based on the above discussion, the NRC staff concludes that TS 3.2.1 requirements related to the UFTR control blades are acceptable.

2.2.3 Neutron Moderation and Reflection

The licensee discusses the neutron moderation and reflection of the reactor core in Section 4 of the SAR. Neutron moderation is achieved by water in the fuel boxes that also acts as a coolant to remove heat from the reactor core. Surrounding the fuel boxes are graphite blocks that also serve as a moderator and reflector. The water-filled shield tank, located at the west face of the reactor, also acts as a neutron reflector for the reactor. The shield tank is discussed in Section 2.4 of this SER.

TS 5.3.1 Reactor Core Design

<u>Specification</u>:

(…)

3. The reactor core shall contain the surrounding graphite assembly that measures about 5’ x 5’ x 5’.

(…)

TS 5.3.1.3 specifies the surrounding graphite assembly for the reactor. The NRC staff finds that they are consistent with those used in other research reactors. The arrangement of the graphite blocks is shown in Figure 2-2. The NRC staff reviewed and finds that TS 5.3.1.3 provides an adequate description of the graphite design feature of the core design. On the basis of the above information, the NRC staff concludes that 5.3.1.3 is acceptable.

Based on its review of the SAR and TS 5.3.1.3, the NRC staff concludes that there is reasonable assurance that the neutron moderator and reflectors will function safely in the UFTR core for the renewal period without adversely affecting public health and safety.

2.2.4 Neutron Startup Source

The licensee discusses the neutron startup source in Section 4.2.4 of the SAR. The primary function of the neutron source is to provide sufficient counts such that proper functioning of the instrumentation can be verified during startup. The UFTR uses a regenerable 25-curie (Ci) antimony-beryllium (SbBe) neutron source. This source is suitable for providing sufficient source neutrons for reactor startup. In addition, a removable 1-Ci plutonium-beryllium (PuBe) source is also available at the facility. The SbBe source is normally left in place in the west vertical port. The removable PuBe source may be inserted into the reactor through the vertical ports. When not in use, the PuBe source is stored in a shielded cylindrical container outside the reactor.

Based on a review of the information provided by the licensee, the NRC staff finds that:

- The design of the neutron startup source is of a type that has been used reliably in similar reactors licensed by NRC.
- The SbBe source is designed to regenerate in the radiation environment during reactor operation.
- The source strength produces an acceptable count rate on the reactor startup instrumentation and allows for a monitored startup of the reactor under all operating conditions.

As discussed in Section 4.2.3 of this SER, TS 3.2.1 requires the control and safety system to have an interlock that prevents rod withdrawal when the neutron count is less than 2 counts per second. The NRC staff reviewed the information on the neutron startup source and based on the review, the NRC staff concludes that the neutron startup source is adequate to allow controlled reactor startup and, therefore, it is acceptable.

2.2.5 Core Support Structure

According to SAR Section 4.2.5, the majority of the UFTR support and other structures are made of aluminum or concrete. The mechanical and nuclear properties of these materials are deemed adequate for continued operation at the low neutron flux level and operating temperature of UFTR. Furthermore, in the response to RAI 4-9 (Ref. 5), the licensee states that the low heat generation is conducive to the continued structural integrity, and currently, there is no indication of stress or damage. The licensee also states that remaining life of the support structures is expected to be as long as the facility exists. The NRC staff reviewed the information on the core support components and finds that these reactor core components are

capable of positioning and aligning the fuel, experiment facilities and the control blades for all anticipated operating conditions and will provide adequate coolant flow to the fuel assemblies. The alignment of the fuel within the core is evaluated and found acceptable in Section 2.2.1 of this SER. The alignment of the experimental facilities within the core is evaluated and found acceptable in Section 2.3 of this SER. The alignment of the control blades within the core is evaluated and found acceptable in Section 2.2.2 of this SER.

On the basis of its review of the information provided in the SAR and as discussed above, the NRC staff concludes that there is reasonable assurance that the reactor core support structure will function safely for the renewal period without adversely affecting public health and safety.

2.2.6 Conclusions

The NRC staff reviewed the information on the UFTR reactor fuel, neutron reflector, neutron moderator, neutron source, control rods, and reactor core support structure. On the basis of this review, the NRC staff concludes that the design of these core structures for the UFTR is acceptable and should continue to permit safe operation and shutdown of the reactor. The design features of this reactor are similar to those typical of the Argonaut reactors licensed in the past by the NRC at comparable power levels.

2.3 Experimental Facilities

The UFTR is used as a teaching and training tool for research, and it provides a range of irradiation services. These services include isotope production, neutron activation analysis, and neutron radiography. To accomplish these tasks, a variety of experimental facilities are available in the UFTR and they are described in SAR Chapter 10 and some are illustrated in Figure 2-5 (reproduced from UFTR SAR Figure 4.3).

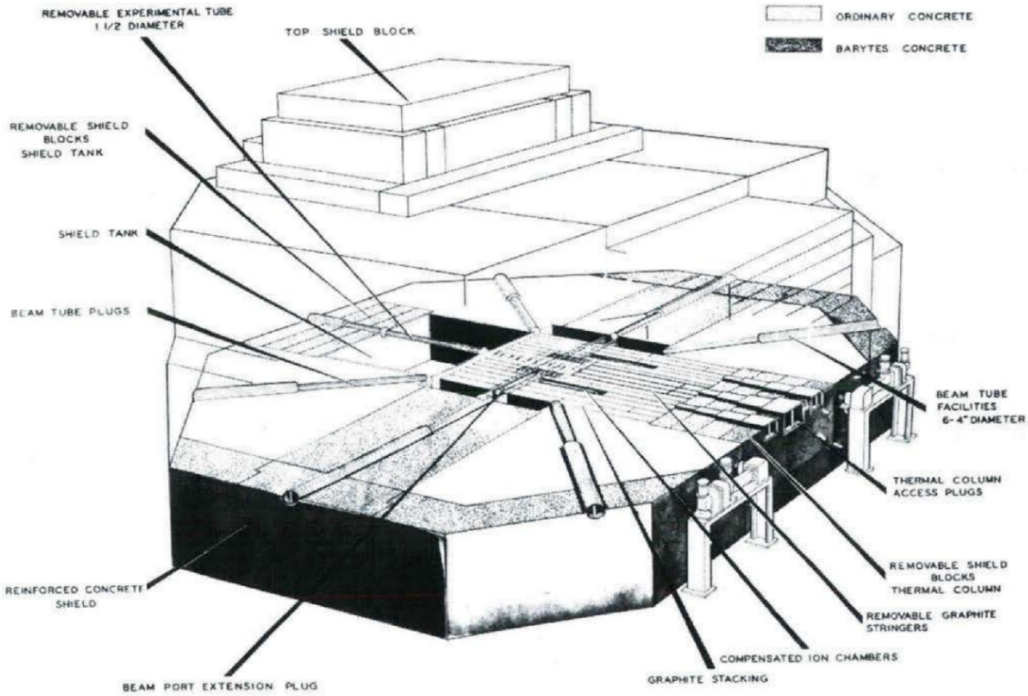

Figure 2-5 Experimental Facilities

TS 5.3.1.4 establishes the requirements that are applicable to experimental locations in the reactor core.

TS 5.3.1 Reactor Core Design

Specification:

(…)

4. The reactor core shall contain experimental locations to include three vertical columns and one horizontal throughport.

(…)

The licensee describes the UFTR experimental facilities in SAR, Section 10.2. A summary of the licensee's description of these facilities is as follows:

Foil Slots

Flux measuring foils can be placed in vertical foil slots, which are located at intervals in graphite stringers which can be placed between the fuel boxes or within the thermal column, and then used for neutron flux mapping.

Vertical Ports

There are three vertical experimental ports which are centrally located with respect to the fuel boxes. The maximum neutron flux is available in the vicinity of these ports. Stepped shield plugs to limit radiation streaming are normally inserted when these ports are not in use.

Thermal Column

A thermal column is provided in the east face of the reactor having four removable stringers. Experiments requiring highly-thermalized neutrons can be placed in the thermal column or in the emergent beam. Stepped shield plugs are normally inserted when the thermal column is not in use.

Shield Water Tank

A water tank is placed against the west face of the reactor opposite the thermal column and is shielded on the outer three sides by concrete. The shield tank can be used to perform shielding experiments or for the irradiation of large objects. If the location does not give sufficient fast neutrons, the thermal neutrons leaving the face of the reactor can be converted to fast neutrons by a converter plate installed inside the tank.

Horizontal Ports

Six horizontal ports are located in the center plane of the reactor core. These ports may be fitted with collimators to allow for neutron transmission experiments. Stepped shield plugs are normally inserted when these ports are not in use.

East-West Throughport

A horizontal aluminum pipe passes through the shield tank outer wall and is welded to the reactor west face. This tube allows the insertion of the East-West throughport (EWTP). The EWTP is a horizontal tube approximately 1.88 inches inner diameter by 20 ft in length.

Automatic Transfer System (Rabbit)

The UFTR rabbit sample transfer system is a pneumatic system designed to quickly transfer samples into and out of the reactor core. The specimens are placed in a small polyethylene capsule (a rabbit capsule) which is placed into the receiving station. The rabbit capsule travels through a polyethylene tube from the receiving station to the west side of the shield tank. The polyethylene tube is connected to an aluminum pipe which goes through the shield tank to the reactor center line. The rabbit returns along the same path to the receiving station. A regulator valve supplies nitrogen gas, which is used to minimize the production of Ar-41, to run the system and a solenoid valve directs gas flow. The gas flow design minimizes the possibility of fragments from a shattered rabbit becoming trapped in the center of the reactor. Samples may be inserted for automatic insertion and return or manual insertion and return.

Based on review of the provided information, the NRC staff finds that TS 5.3.1.4 adequately defines the experimental facilities to ensure changes to specified experimental facility features supporting the radiological safety assumptions are not made without prior NRC approval. Therefore, the NRC staff concludes that TS 5.3.1.4 is acceptable.

TS 3.8.1 and TS 3.8.2 establish requirements that are applicable to all experiments or experimental devices installed in the reactor core.

TS 3.8.1 Experiment Reactivity Limits

Specification:

1. The absolute value of the reactivity worth of any single MOVABLE EXPERIMENT shall be less than or equal to 720 pcm.

2. The sum of the absolute values of the reactivity worths of all EXPERIMENTS shall be less than or equal to 1400 pcm.

TS 3.8.1.1 establishes the requirement to limit the worth of single movable experiments. This specification helps to ensure that experiments that can be moved while the reactor is operating cannot cause an accident that would violate the safety analysis supplied by the licensee. The limit of 720 pcm corresponds to the recommended limit in NUREG-1537, of one dollar of reactivity, such that inadvertent prompt criticality is avoided even if the experiment were to fail. This specification is applicable during all modes. On the basis of this information, the NRC staff concludes TS 3.8.1.1 is acceptable.

TS 3.8.1.2, applicable during all modes, establishes the requirement to limit the sum of the absolute values of the worth of all experiments. This specification helps to ensure that experiments cannot reduce the shutdown margin (SDM) below TS limits and cannot cause an accident that would violate the safety analysis supplied by the licensee. The analysis of SDM is reviewed in Section 2.6.3 of this SER. Additionally, the licensee states the total reactivity worth limit is established to prevent a reactivity insertion larger than the stipulated maximum step reactivity insertion in the accident analysis in SAR Section 13.2. The licensee's analysis of reactivity insertion events is reviewed in Section 6.2 of this report. The licensee's analysis for a reactivity change as large as 1,480 pcm shows that the resulting fuel temperatures after such an event are substantially lower than the SL for UFTR. Consistent with the guidance of NUREG-1537, the absolute values of the reactivity worths of all experiments is no more than

twice the limit for an individual experiment. The value is also consistent with the SAR analysis of inadvertent reactivity insertions reviewed in Section 6.2 of this SER. On the basis of this information, the NRC staff concludes TS 3.8.1.2 is acceptable.

Consistent with NUREG-1537 and ANSI/ANS-15.1-2007, there are no specific surveillances provided under TS 3.8. TS 6.5.3 requires that Reactor Safety Review Subcommittee (RSRS) experiment review and approval include verification that the limitations imposed under TS 3.8 are met, as appropriate. The UFTR experiment review and authorization process is described in SAR Section 10.3 and discussed below under TS 6.5. The RSRS evaluates the classification and safety aspects of all new experiments and any change in the facility that may be necessitated by the requirements of the experiment. Thus, the NRC staff finds that separate SRs for experiments are not needed under TS 3.8.1.

The NRC staff reviewed TS 3.8.1.1 and TS 3.8.1.2. The NRC staff finds that these specifications are supported by the analysis of SAR Chapter 13 and are consistent with the guidance in NUREG-1537. On this basis, the NRC staff concludes that TS 3.8.1.1 and TS 3.8.1.2 are acceptable.

The purpose of TS 3.8.2 is to ensure operational safety and prevent damage to the reactor systems and minimize potential radiological hazards by placing restrictions on the amount and type of materials used in experiments for all modes. TS 3.8.2 controls materials used in experiments as described below:

TS 3.8.2 Experiment Materials and Malfunctions

Specification:

1. EXPERIMENTS known to contain explosive materials, such as gunpowder, TNT, nitroglycerin, or PETN, shall not be irradiated.

2. EXPERIMENTS known to contain corrosive materials shall be double encapsulated.

3. EXPERIMENTS shall be designed such that they will not contribute to the failure of other EXPERIMENTS, core components, or fuel cladding.

4. Each fueled EXPERIMENT shall be limited such that the total inventory of iodine isotopes 131 through 135 in the EXPERIMENT is not greater than 0.01 curies.

5. Credible failure of any EXPERIMENT shall not result in exposures in excess of the limits in 10 CFR Part 20.

ACTIONS

	CONDITION	REQUIRED ACTIONS		COMPLETION TIME
A.	Release of EXPERIMENT material that could cause damage to other EXPERIMENTS, core components, or fuel cladding.	A.1	Verify the reactor is shutdown	5 minutes
			AND	
		A.2	Inspect the affected area	Prior to continued operations
			AND	
		A.3	Obtain RSRS approval	Prior to continued operations

TS 3.8.2.1 establishes the requirement that explosive material may not be irradiated in the UFTR. This requirement helps to ensure that materials being irradiated will not explode and initiate an accident. This specification is applicable during all modes. This requirement eliminates the potential for a detonation and reactor damage during the irradiation of an experiment. The NRC staff finds that TS 3.8.2.1 is consistent with the recommendations of NUREG-1537, Part 1, Appendix 14.1, Section 3.8.2. On the basis of this information, the NRC staff concludes TS 3.8.2.1 is acceptable.

TS 3.8.2.2 establishes the requirement to control corrosive materials in an experiment. This specification helps to reduce the possibility that the irradiation of corrosive materials in experiments could lead to a failure that is harmful to reactor components. It requires that experiments known to contain corrosive materials be doubly encapsulated. This specification is applicable during all modes. The NRC staff finds that this specification is consistent with the guidance in NUREG-1537, Part 1, Appendix 14.1. On the basis of this information, the NRC staff concludes TS 3.8.2.2 is acceptable.

TS 3.8.2.3 establishes the requirement that experiments will not contribute to the failure of other experiments, core components, or fuel cladding. This specification helps to ensure that experiment operation or failure does not result in other failures. This specification is applicable during all modes. The NRC staff finds that this specification is consistent with the guidance in NUREG-1537, Part 1, Appendix 14.1 to help ensure that an anticipated failure of an experiment is highly unlikely. On the basis of this information, the NRC staff concludes TS 3.8.2.3 is acceptable.

TS 3.8.2.4 establishes the requirement to limit the inventory of fissionable material that can be produced in a fueled experiment. This specification helps to ensure that the postulated release of radioisotopes from a failed experiment does not exceed the analysis of the FHA. The NRC staff review of that accident is discussed in Section 6.5 of this SER where the resulting occupational and public doses are found to be acceptable. The NRC staff finds that this specification is consistent with the analysis to help ensure that releases are within 10 CFR Part 20 limits. This specification is applicable during all modes. On the basis of this information, the NRC staff concludes TS 3.8.2.4 is acceptable.

TS 3.8.2.5 establishes the requirement that failure of experiments will be designed to help ensure that potential releases of radioactive material from experiments are bounded by the exposure limits in 10 CFR Part 20 for UFTR staff and members of the public. This includes experiment failures under normal reactor operations, credible reactor accident conditions, and accident conditions in the experiment. The NRC staff finds that this specification is consistent with the guidance in NUREG-1537, Appendix 14.1 to help ensure that the failure of an experiment does not result in releases or exposures in excess of established regulatory limits. On the basis of this information, the NRC staff concludes TS 3.8.2.5 is acceptable.

The NRC staff evaluated the action statements under TS 3.8.2 related to release of experiment material that could cause damage to other experiments, core components, or fuel cladding. The actions specified require that, upon release of experiment material that could cause damage to other experiments, core components, or fuel cladding, the reactor should be verified to be shutdown within five minutes and actions taken to inspect the area potentially affected by the experiment failure. Also, the RSRS review and approval is required before reactor operation can be resumed. Additionally, by TS 6.7.2, the NRC headquarters operations center is likely required to be notified of the occurrence. The NRC staff finds that five minutes is a reasonable amount of time to conduct an orderly shutdown of the reactor and that the required actions for inspection and RSRS approval prior to reactor operation are consistent with the guidance in ANSI/ANS-15.1-2007 and NUREG 1537. Based on the above, the NRC staff concludes that the action statement under TS 3.8.2 are acceptable.

Consistent with NUREG-1537 and ANSI/ANS-15.1-2007, there are no specific surveillances provided under TS 3.8.2. Experiments are reviewed by the RSRS prior to initiation (see discussion of TS 6.2.3 in Section 7.3 of this SER). The UFTR experiment review and authorization process is described in SAR Section 10.3 and discussed below under TS 6.5. The RSRS evaluates the classification and safety aspects of all new experiments and any change in the facility that may be necessitated by the requirements of the experiment. Thus, the NRC staff finds that separate SRs for experiments are not needed for TS 3.8.2.

The NRC staff reviewed TS 3.8.2.1 through TS 3.8.2.5 and the corresponding action statement. The NRC staff finds these specifications, as well as the omission of specific SRs for TS 3.8.2, are consistent with the guidance of ANSI/ANS-15.1-2007 and NUREG-1537.

The NRC staff finds that the licensee's limitations, controls, and procedures for experiments are in place and are adequate to help to minimize the potential occurrence of an accidental experiment malfunction. The design of experimental irradiation facilities has also been reviewed and found acceptable. If an experiment were to malfunction, the TS controls, which limit the reactivity worth, mass of explosive materials, and other experiment materials, would limit the accidental reactivity insertions, damage to reactor components, and release of radioactivity. On this basis, the NRC staff concludes that TS 3.8.2 is acceptable.

TS 6.5 provides the administrative controls over experiment review and approval.

TS 6.5 Experiment Review and Approval

Approved EXPERIMENTS shall be carried out in accordance with established and approved procedures. In addition:

1. All new EXPERIMENTS or class of EXPERIMENTS shall be reviewed by the RSRS and approved in writing by the Facility Director or designated alternates prior to initiation;

2. Substantive changes to previously approved EXPERIMENTS shall be made only after review by the RSRS and approval in writing by the Facility Director or designated alternates. Minor changes that do not significantly alter the EXPERIMENT may be approved by Reactor Manager or higher; and

3. EXPERIMENT review and approval shall include verification that the limitations imposed under Section 3.8 are met, as appropriate.

TS 6.5.1 establishes the requirement that all new experiments be reviewed by the RSRS and approved by the Facility Director (Level 2 management). TS 6.5.2 establishes the requirement that substantive changes to previously-approved experiments be reviewed by RSRS and approved by the Facility Director. Minor changes that do not significantly alter the experiment may be approved by the Reactor Manager (Level 3 management) or higher. TS 6.5.3 provides for independent verification by the RSRS to help ensure the design of experiments meet the experiment reactivity limits under TS 3.8.1 and adhere to the restrictions for experiment materials and malfunctions of TS 3.8.2. These specifications help to ensure that only approved experiments meeting the requirement of the UFTR procedures and TSs are inserted into the reactor. The NRC staff notes that the requirements of 10 CFR 50.59 will need to be met for any tests or experiments approved (including any changes to tests or experiments). The NRC staff finds that this specification is consistent with the guidance in ANSI/ANS-15.1-2007 and NUREG-1537. On the basis of this information, the NRC staff concludes TS 6.5 is acceptable.

Based on the above findings and conclusions, the NRC staff concludes:

- The licensee has an independent organization for experiment review, the RSRS, which has diverse and independent membership as well as acceptable experience and expertise. See Section 7.5 of this SER for additional information on the RSRS.

- The procedures and methods used at the facility ensure a detailed review of all potential safety and radiological risks that an experiment may pose to the UFTR staff and the public.

- The administrative controls are sufficient to protect the operations personnel, experimenters, and general public from potential hazards caused by the experiments.

- The prohibition on irradiating explosive materials, controls for encapsulation of corrosive materials, design of fueled experiments to ensure malfunctions are bounded by the accident analysis in SAR Chapter 13, and design of all experiments are such that radiation doses from credible failure of any experiment do not exceed the limits of 10 CFR Part 20 and are consistent with the facility ALARA program.

- TSs ensure acceptable implementation of the review and approval of experiments.

Further, the NRC staff concludes that TS 3.8.1 and TS 3.8.2 for design of experiments and use of experimental facilities and the TS 6.5 review process for experiments at UFTR provides reasonable assurance that appropriate precautions are taken to minimize the risk to personnel

and the public. The NRC staff also concludes these TSs help ensure that the use of experiments or experimental facilities will not contribute to failure of other experiments, core components, or fuel cladding and will keep releases of radioactive material below regulatory limits, so as to not pose a significant risk to the health and safety of the public, or facility personnel.

2.4 Shield Tank

SAR Section 4.3 describes the UFTR shield tank. This water filled tank is placed against the west face of the reactor and is shielded on the outer sides by concrete. The 5 ft by 5 ft by 14 ft shield tank provides biological shielding and can be used for experiments or for the irradiation of large objects (see Figure 2-2).

TS 3.9.1 applies to the shield tank water level during reactor operation and specifies the minimum water level required in the shield tank as follows:

TS 3.9.1 Shield Tank Level

Specification: Shield tank water level shall be no lower than 18 inches below the top of the tank.

ACTIONS

	CONDITION	REQUIRED ACTION		COMPLETION TIME
A.	Level not within the limit.	A.1	Be in MODE 2	2 minutes
			AND	
		A.2	Restore level to within limit	15 minutes

SURVEILLANCE REQUIREMENT

	SURVEILLANCE	FREQUENCY
SR 3.9.1	Verify shield tank water level is within the limit	Daily

TS 3.9.1 establishes the requirement to maintain the shield tank water level no less than 18 inches below the top of the shield tank. This specification applies during Modes 1 and 2 (Power Operation and Startup). This specification helps to ensure that there is a sufficient amount of water in the shield tank, which provides shielding for the west side of the reactor core during full power reactor operation (Ref. 24). The TS basis provides the references to SAR Chapters 4, 7, 9, 10, and 11 for the analysis justifying the stated shield tank level is adequate during reactor operation to protect personnel working in close proximity to the west face of the reactor from the potential radiation hazards. SAR Section 11.1.5.5 documents exposure measurements taken at the top of the shield tank while operating at full power. This assessment provides a basis for dose estimates in support of the ALARA goals of the licensee and an adequate level of assurance that shielding requirements are adequately met using the combination of concrete and water in the shield tank. On the basis of this information, the NRC staff concludes that TS 3.9.1 is acceptable.

SR 3.9.1 establishes the requirement to verify the shield tank level daily while in Modes 1 and 2. This specification helps to ensure that the biological shielding expected and demonstrated by measurements is provided during modes of operation where it would be needed. This surveillance interval is consistent with the guidance in NUREG-1537, Appendix 14.1. On the basis, of this information the NRC staff concludes that SR 3.9.1 is acceptable.

The action statement for TS 3.9.1 provides guidance to the operator in the event that shield tank level is not within the specified limit to reduce power to less than 1 percent power (Mode 2) within 2 minutes and, once in Mode 2 allows 15 minutes to restore the level to within the limit. If the level cannot be restored, the reactor is shut down. The NRC staff finds that these actions and their corresponding completion times are reasonable and appropriate. The action to reduce power within 2 minutes is appropriate to reduce radiation levels and the potential for overexposure of UFTR staff. Additionally, 15 minutes is a reasonable amount of time to restore level to the appropriate level without disrupting continued operations. Based on this information, the NRC staff concludes the action statement for TS 3.9.1 is acceptable.

Based on a review of the information provided by the licensee, the NRC staff concludes that TS 3.9.1, SR 3.9.1, and the associated action statement are acceptable because:

- The licensee has justified an appropriate LCO and SR for the tank and they are included in TS 3.9.1.
- The design features of the tank presented in SAR Chapters 4, 7, 9, 10, and 11 offer reasonable assurance of its reliability and integrity for its anticipated license renewal period.
- The minimum operability requirements for the shield tank are acceptable to avoid undue risk to the health and safety of the UFTR staff and the public.
- The action statement for an identified low level in the shield tank is appropriate and timely to avoid undue risk to the health and safety of the UFTR staff and the public.

2.5 Biological Shield

According to SAR Section 4.4, biological shielding is provided around the UFTR to minimize the exposure to any individual working with the reactor to within the established UF ALARA levels and as specified by 10 CFR Part 20. In addition to the shield tank, the biological shielding also includes cast-in-place concrete, with sections of barytes concrete carefully located to reduce overall shield thickness while maintaining its effectiveness as a shield.

The concrete shielding surrounding the reactor consists of the following:

- Sides, center — 6-ft cast-in-place barytes concrete
- Sides, ends — 6-ft 9-inch cast-in-place barytes concrete
- Middle — barytes concrete blocks
- Top — 5-ft 10-inch barytes concrete blocks
- Ends — 3-ft 4-inch barytes concrete block

The ends and the top of the reactor are accessed by removing ordinary concrete blocks cast to fit into the openings. These blocks, weighing up to 4,500 pounds each, incorporate pickup plugs so that they may be removed by the overhead bridge crane.

As discussed in the response to RAI 4-16 (Ref. 5), because of the low heat generation in the core, no degradation of the biological shielding is noted. The shielding is staggered to ensure that no direct pathways for the streaming of radiation occur. The plugs in the facility ports are similarly staggered. Outside of the reactor building, specific areas, such as the rabbit system, use extra shielding for samples that have been irradiated. Portable shielding is also available for placement around open ports as necessary to meet the requirements of radiation work permits for specific experimental activities. After the shielding is replaced, radiation surveys are performed in steps as power level is raised to assure that no significant changes in shielding effectiveness have occurred.

Based on a review of the information provided by the licensee, the NRC staff concludes that:

- The analysis in the SAR offers reasonable assurance that the shield designs will limit exposures from the reactor and reactor-related sources of radiations to below those of 10 CFR Part 20 and the guidelines of the facility ALARA program.
- The design offers reasonable assurance that the shield can be successfully installed with no radiation streaming or other leakage that would exceed the limits of 10 CFR Part 20 and the guidelines of the facility ALARA program.

2.6 Nuclear Design

In this section, the analysis of the UFTR using licensee models is discussed. The information discussed in this section establishes the design bases for the thermal-hydraulic (T&H), transient, and safety analyses.

According to SAR Section 4.5.1, as supplemented by the response to RAI 1 (Ref. 24), the UFTR neutronic model uses the Monte Carlo N Particle code (MCNP6) that employ continuous energy cross-sections. The MCNP code has the CINDER depletion capability which is used in the UFTR models. The NRC staff finds that this analytical toolset is typical of RTR analysis and is appropriate for the UFTR.

The original fuel material definitions are obtained from the manufacturer. The depletion calculations for the core use the licensed steady-state power limit of 100 kWt in a sequence of time steps until k_{eff} is within ±15 pcm of a critical state and until the core becomes subcritical. This establishes end of life (EOL) for the core configuration under consideration and it results in a different core lifetime for each core configuration depending on how many fuel assemblies are used.

According to SAR Section 4.5.1.1, the control blades have a fully-inserted nominal position of 2.5 degrees above the XY center plane and are moved out of the core by rotating them 45 degrees. The top of the shroud is located 10 cm above the top of the fuel box. SAR Figure 4.14 shows the fully inserted and fully withdrawn locations of the control blade with respect to one of the shrouds and the centerline of the core; SAR Figure 4.15 shows the dimensions of the blades; and SAR Figure 4.16 shows the dimensions of the cadmium inserts. The MCNP6 model accounts for control rod position using a programmed relationship utilizing this information.

MCNP material concentrations are then used to perform the neutronics calculations to ascertain power distributions and other core parameters. The NRC staff finds that the methods used to provide neutronics results of UFTR are similar to those used in other RTR facilities and are appropriate. According to the response to RAI 1 (Ref. 24), the MCNP model utilizes a unique material for each fuel assembly, thus ensuring that an appropriate radial burnup distribution is achieved. This helps to ensure that the power distribution is appropriately representative over core life.

2.6.1 Normal Operating Conditions

Following the UFTR fuel conversion to LEU, measurements were taken of key core parameters with 22 fuel assemblies and two dummy assemblies loaded into the core. These measurements are used to benchmark the MCNP model and determine its accuracy. Table 2-3 (excerpted from SAR Table 4-13) compares the measured excess reactivity, shutdown margin, and integral control blade worth values with those calculated. The level of agreement indicates that the MCNP model is suitably predictive. The NRC staff finds that this model is acceptable for the prediction of UFTR core behavior.

Table 2-3 Comparison of Measured and Calculated Parameters

Parameter	Measured (pcm)	Calculated (pcm)	Difference (pcm)
Excess Reactivity	-590	-539	51
Shutdown Reactivity	3370	3441	-71
Control Blade Worths			% Difference
Regulating	-800	-773	-3.5%
Blade 1	-1520	-1414	-7.5%
Blade 2	-1640	-1793	-8.5%
Blade 3	-1970	-1841	7.0%

The normal operating conditions for UFTR are assessed using MCNP. In order to analyze the UTFR, the licensee developed MCNP models for both a 22- (limiting core) and 24-assembly core (operational core) at beginning of life (BOL) and EOL conditions.

As described in SAR Section 4.5.2.1 for the 22 assembly BOL core, the integral worth of each control blade is calculated by fully withdrawing the blade of interest and positioning the others to obtain a critical system, then dropping the blade of interest and comparing the resulting k_{eff}. For the 22 assembly EOL and 24 assembly cores, the reactivity worth of each control blade is calculated between the case where all blades are fully withdrawn and the case where the given blade is inserted. The resulting control blade worths are tabulated in Table 2-6.

In Section 6.2 of this SER, a comprehensive analysis of reactivity insertion events is discussed and found acceptable.

On the basis of this information the NRC staff concludes that:

- The licensee has described the typical core configuration and analyzed the appropriate reactivity conditions. These analyses also include other possible core configurations planned during the life of the reactor. The assumptions and methods used are suitably predictive.

- The analyses include reactivity and geometry changes resulting from burnup, plutonium buildup, and the accumulation of fission products.

- The reactivity analyses include values for the control blades. The assumptions and methods used are acceptable.

- The analyses address a limiting core that is the minimum size possible with the planned fuel. Since this core configuration has the highest power density, the licensee uses it in SAR Section 4.6 to determine the limiting thermal-hydraulic characteristics for the reactor.

- The analyses and information in this section describe a reactor core that could be designed, built, and operated without unacceptable risk to the health and safety of the public.

- The licensee has justified appropriate LCOs and SRs for minimal operating conditions and included them in appropriate TSs (refer to TS 3.1, TS 3.2, and TS 5.3 discussed in Section 2.2 of this SER).

2.6.2 Reactor Core Physics Parameters

Using these models, the licensee has determined a comprehensive set of core neutronic parameters for the 22 fuel bundle core, replicated here as Table 2-4, Table 2-5, and Table 2-6 (excerpted from SAR Table 4-1, Table 4-2, and Table 4-3). The 22- and 24-assembly cores both use fresh fuel at BOL and are depleted at 100 kWt until there is no excess reactivity.

Table 2-4 Summary of Nominal Design Parameters

DESIGN DATA	22 Assemblies
Fuel Type	U_3Si_2-Al
Fuel Density	5.55 g/cc
Fuel Meat Size	
Width (cm)	5.96
Thickness (cm)	0.051
Height (cm)	60.0
Fuel Plate Size	
Width (cm)	7.23
Thickness (cm)	0.127
Height (cm)	65.1
Cladding	6061 Al
Cladding Thickness (cm)	0.038
Fuel Enrichment (nominal wt%)	19.75%
"Meat" Composition (wt% U)	62.98
Mass of 235U per Plate (nominal)	12.5 g

Table 2-5 Summary of Nominal T&H Parameters at 100 kWt

Max. Fuel Temperature (°C)	73.6
Max. Clad Temperature (°C)	73.5
Max. Coolant Channel Outlet Temperature (°C)	71.5
Minimum Onset of Nucleate Boiling Ratio (ONBR)	1.54
Minimum Departure from Nucleate Boiling Ratio (DNBR)	463

Table 2-6 Summary of Neutronics Parameters

REACTOR PARAMETERS	22 Assemblies	24 Assemblies
Fresh Core Excess Reactivity (pcm)	539 ± 59	3105 ± 15
Shutdown Margin: (pcm)		
BOL	3503 ± 21	823 ± 21
EOL	3862 ± 21	3883 ± 21
Control Blade Worth (pcm) Regulating		
BOL	773 ± 21	836 ± 21
EOL	775 ± 21	831 ± 21
Safety 1		
BOL	1414 ± 21	1539 ± 21
EOL	1405 ± 21	1534 ± 21
Safety 2		
BOL	1793 ± 21	1531 ± 21
EOL	1762 ± 21	1505 ± 21
Safety 3		
BOL	1841 ± 21	1539 ± 21
EOL	1764 ± 21	1527 ± 21
Coolant Void Coefficient (pcm/%void)		
BOL (0 to 5% void)	-125 ± 4	-131 ± 4
EOL (0 to 5% void)	-94 ± 4	-94 ± 4
Coolant Temperature Coefficient (pcm/°C)		
BOL	-6.7 ± 0.3	-6.7 ± 0.3
EOL	-4.8 ± 0.3	-4.8 ± 0.3
Fuel Temperature Coefficient (pcm/°C)		
BOL (21 to 127°C)	-1.9 ± 0.2	-1.7 ± 0.2
EOL (21 to 127°C)	-1.7 ± 0.2	-1.6 ± 0.2
Effective Delayed Neutron Fraction (β_{eff})		
BOL	741 ± 10	737 ± 10
EOL	739 ± 10	732 ± 10
Neutron Lifetime, λ (μs)		
BOL	198.5 ± 0.1	192.4 ± 0.1
EOL	203.4 ± 0.1	206.3 ± 0.1

The values for the prompt neutron lifetime, λ, and the effective neutron fraction, β_{eff}, are calculated for both the 22- and 24-assembly cores using the MCNP5 model. The value of β_{eff} is calculated by determining k_{eff} with and without delayed neutrons. The neutron lifetime is also calculated using MCNP. The NRC staff finds that these values are reasonable and consistent with other similar reactors. Furthermore, the NRC staff has previously found that the MCNP model employed is suitably predictive. All reactivity feedback coefficients for the UFTR are negative. This means that should either fuel or moderator temperatures increase, the void, coolant, and fuel temperature coefficients would provide negative reactivity, counteracting any increase in power. The NRC staff concludes that these values are acceptable. On the basis of this information, the NRC staff concludes that the kinetics parameters as calculated are acceptable.

On the basis of this information, the NRC staff concludes that:

- The analyses of neutron lifetime, effective delayed neutron fraction, and coefficients of reactivity have been completed using methods that are acceptable and the results are similar to those validated at other similar reactors.

- The effects of fuel burnup and reactor operating characteristics for the life of the reactor are considered in the analyses of the reactor core physics parameters.

- The numerical values for the reactor physics parameters depend on features of the reactor design, and the information given is acceptable for use in the analyses of reactor operation.

2.6.3 Operating Limits

Power Distributions

The licensee calculated power distributions axially per-bundle and radially across the core, as tabulated in SAR Table 4-12 and supplemented by the response to RAI 2 (Ref. 24). The MCNP model provides the relative power distribution in each fuel assembly for the BOL 22 fuel assembly core. In performing these calculations, the control blades are systematically repositioned in order to skew the power distribution in such a way as to result in the highest possible power in the hot fuel assembly. This assembly is used in SAR Chapter 13 accident analyses. Through analysis documented in the response to RAI 2 (Ref. 24), the licensee finds that assembly 2-3 in the 22-assembly core at BOL has the highest power - 5.44 kWt. This information is displayed in Figure 2-6 (reproduced from SAR Figure 4-20 and Figure 4-21), and is the LCC as determined by the licensee. In these graphics, the power is displayed in terms of peak-to-average power. Using the radial peak power in the graphic below (1.198), the peak power assembly for a core power of 100 kWt is 5.44 kWt.

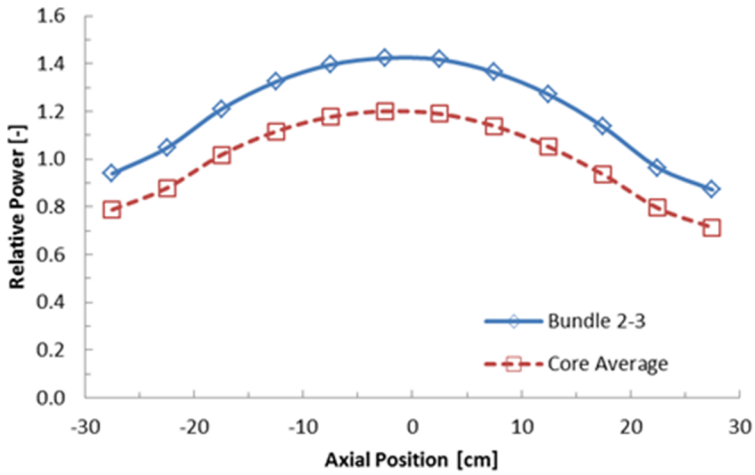

0.91	1.01	1.04	0.96	0.80	
1.00	1.12	1.154	1.07	0.87	0.79
1.03	1.15	1.198	1.14	0.94	0.83
0.94	1.05	1.09	1.04	0.87	

Figure 2-6 Axial and Radial Power Peaking Factors for LCC (22- Assembly Core at BOL)

Excess Reactivity

The licensee discusses the excess reactivity of the UFTR core in SAR Section 4.5.2.3 (Ref. 9). For the 22-assembly BOL core, the difference in integral blade worths (blade fully withdrawn versus blade at critical position) is used to calculate excess reactivity. For the 24-assembly BOL core, excess reactivity is calculated directly in MCNP with all blades fully withdrawn.

The NRC staff observes that the 24-assembly core at BOL has an excess reactivity of 3,105 pcm (SAR Table 4-3) using all fresh fuel. This exceeds the excess reactivity limit of 1,480 pcm by a significant margin. The NRC staff concludes that any core configuration within UFTR must satisfy the excess reactivity limit of TS 3.1.2, discussed below. TS 5.3.2 applies to the reactor core fuel loading to help ensure the operational reactor core is loaded as intended and that the fuel loading remains bounded as described in SAR Chapters 4 and 13. TS 5.3.2 is evaluated and found acceptable in Section 2.2.1 of this SER.

Shutdown Margin

In SAR Section 4.5.3.1 the SDM of the UFTR core is discussed. SDM is the instantaneous amount of reactivity by which the reactor is subcritical or would be subcritical from its present condition assuming all control blades are fully inserted except for the most reactive control

blade. SDM requirement is the amount by which the reactor is required to be subcritical assuming that the single control blade with the highest reactivity worth is assumed to be in the most reactive (typically fully withdrawn) position. As evaluated by the licensee for both the 22-and 24-assembly cores, control blade 3 is the most reactive. As such, the shutdown reactivity is evaluated by fully inserting control blades 1 and 2 and the regulating blade, while fully withdrawing control blade 3. Table 2-7 (reproduced from SAR Table 4-14 (Ref. 9)) compares the absolute value of shutdown margins of the 22- and 24-assembly cores.

Table 2-7 Shutdown Reactivity for Various Core Conditions

22 Assemblies at BOL	3503 pcm
22 Assemblies at EOL	3862 pcm
24 Assemblies at BOL	823 pcm
24 Assemblies at EOL	3883 pcm

The NRC staff observes that the 24-assembly core at BOL has a SDM of 823 pcm using all fresh fuel. This exceeds the SDM limit of 760 pcm set by TS 3.1.1. Thus, the 24-assembly configuration is allowed by the SDM per TS 3.1.1. The NRC staff concludes that any core configuration within UFTR must use fuel having a reactor core fuel loading per TS 5.3.2 that also satisfies the TS 3.1.1 limit for SDM.

TS 3.1 defines the reactor parameters that describe the allowable reactivity conditions of the core:

TS 3.1 Reactor Core Reactivity Parameters

Specification: According to Table 3.1-1.

Table 3.1-1
Reactor Core Reactivity Parameters

	REACTIVITY PARAMETER	ALLOWABLE VALUE
1.	SHUTDOWN MARGIN	≥ 760 pcm
2.	EXCESS REACTIVITY	≤ 1480 pcm

ACTIONS

	CONDITION	REQUIRED ACTION		COMPLETION TIME
A.	SHUTDOWN MARGIN not within limit	A.1	Dump water moderator	15 minutes
B.	EXCESS REACTIVITY not within limit	B.1	Dump water moderator	15 minutes

SURVEILLANCE REQUIREMENTS

	SURVEILLANCE	FREQUENCY
SR 3.1.1	Verify SHUTDOWN MARGIN within limits	Annual (a)
SR 3.1.2	Verify EXCESS REACTIVITY within limits	Annual (a)

(a) These reactivity parameters shall also be verified within limits following changes in CORE CONFIGURATION.

TS 3.1.1 establishes the requirement for SDM so that the core reactivity is such that the core is shutdown by at least 760 pcm even if the most reactive control blade remains in the most reactive condition (the stuck blade criteria). This TS is applicable in Mode 1 through Mode 5 and it helps to ensure that the control blade reactivity credited in any accident or transient scenario is uniformly used. The analysis in the SAR characterizes SDM for both 22-and 24-assembly cores. That analysis, discussed above, shows that all core configurations meet TS 3.1.1 for SDM. The limiting configuration is fresh fuel loading of 24 assemblies at BOL for a SDM of 832 pcm, which is allowable by TS 3.1.1. Consequently, the NRC finds that future core configurations are limited by TS 3.1.1 to meet or exceed the 760 pcm limit on SDM. Since TS 3.1 Footnote (a) requires the licensee to verify the actual SDM against this limit for each change to the core configuration, the NRC staff finds that this specification acceptably ensures that any core configuration will satisfy this limit, thus helping to ensure that acceptable SDM is achieved. Additionally, the TS definition for SDM requires that when calculating shutdown margin, no credit is taken for negative experiment worth, temperature effects, or xenon poisoning. On the basis of this information, the NRC staff concludes that TS 3.1.1 is acceptable.

TS 3.1.2 establishes the requirement limiting core excess reactivity to 1,480 pcm. This specification helps to ensure that the excess reactivity of the core is limited so that the ability of the control blades to satisfy SDM is preserved under all conditions. This excess reactivity also limits reactivity available for insertion into the core during accident conditions. The analysis supplied in the SAR characterizes excess reactivity for both 22- and 24-assembly cores. That analysis, discussed above, shows that an all fresh fuel loading of 24 assemblies would result in an excess reactivity of 3,105 pcm–significantly more than allowed by TS 3.1.2. Consequently, the NRC staff finds that UFTR core configurations are limited by TS 3.1.2, such that the allowable configurations by TS 5.2 and considering fuel burnup will not result in exceeding the limit on excess reactivity of 1,480 pcm. Since TS 3.1 footnote (a) requires the licensee to verify the actual excess reactivity against this limit for each change to the core configuration, the NRC staff concludes that this specification acceptably ensures that any core configuration will satisfy this limit, thus helping to ensure that acceptable SDM is achieved. On the basis of this information, the NRC staff finds that TS 3.1.2 is acceptable.

SR 3.1.1 establishes the requirement to verify SDM annually or after core configuration changes. This specification helps to ensure that the control blades always have the ability to make the reactor subcritical by at least 760 pcm even assuming a stuck blade. The NRC staff finds that SR 3.1.1 is consistent with the guidance in ANSI/ANS-15.1-2007. On the basis of this information, the NRC staff concludes that this SR 3.1.1 is acceptable.

SR 3.1.2 establishes the requirement to verify excess reactivity annually or after core configuration changes. This specification helps to ensure that the control blades cannot be overwhelmed by the excess reactivity of the core. The NRC staff finds that SR 3.1.2 is

consistent with the guidance in ANSI/ANS-15.1-2007. On the basis of this information, the NRC staff concludes that this SR 3.1.2 is acceptable.

Although it is highly unlikely based on the available core excess reactivity and the pre-configured fuel assemblies dictated by TS 5.3.2, in the event that the TS for SDM or excess reactivity is not met, 15 minutes are allowed before the operator must dump the water moderator. Dumping the moderator (referred to as a "full trip" in SAR Section 7.3.1 and discussed in Section 3.2 and Section 4.4 of this SER) introduces a substantial amount of negative reactivity since the primary water in the fuel boxes acts as both a moderator and reflector. According to SAR Section 13.2.3.1, the reactivity worth of the water itself is several times greater than the combined reactivity worth of the control blades. Based on this information, the NRC staff finds that these actions and their corresponding completion times are reasonable and appropriate. Additionally, 15 minutes is a reasonable amount of time to allow to correct these reactivity parameters or else dump the moderator water. Based on this information, the NRC staff concludes the action statement for TS 3.1.2 is acceptable.

On the basis of this information, the NRC staff concludes that:

- The licensee has discussed and justified all excess reactivity factors needed to ensure a readily operable reactor. The licensee has also considered the design features of the control systems that ensure that this amount of excess reactivity is fully controlled under normal operating conditions.

- The discussion of limits on excess reactivity in Section 6.2 of this SER shows that a credible rapid withdrawal of the most reactive control blade or other credible failure that would add reactivity to the reactor would not lead to loss of fuel integrity. Therefore, the information demonstrates that the proposed amount of reactivity is available for normal operations, but would not cause unacceptable risk to the public from a transient.

- The definition of the shutdown margin is negative reactivity obtainable by control blades to ensure reactor shutdown from any reactor condition, including a loss of normal electrical power. With the assumption that the most reactive control blade is inadvertently stuck in its fully withdrawn position, the analysis derives the minimum negative reactivity necessary to ensure safe reactor shutdown. The licensee conservatively proposes a shutdown margin of -760 pcm in the TSs. The licensee has justified this value; it is readily measurable and is acceptable.

- The SAR contains calculations of the peak thermal power density achievable with any core configuration. This value is used in the SAR Section 2.7 calculations to derive limiting safety system settings, which are acceptable.

2.7 Thermal-Hydraulic Design

In this section, the results of thermal-hydraulic analyses are discussed to demonstrate that the UFTR thermal-hydraulic design provides the cooling conditions necessary for normal full-power operating conditions. The thermal-hydraulic analysis models a single fuel box containing the limiting fuel assemblies using the PLTEMP/Argonne National Laboratory (ANL) V 3.0 code.

As stated in SAR Section 4.6.1 and supplemented by the response to RAI 5 (Ref. 24), the licensee analyzed the thermal-hydraulic design of the LEU core by considering four identical

LEU fuel plates in a single limiting fuel box. The power generated by each assembly is assumed to correspond to the power for assemblies 2-1, 2-2, 2-3, and 2-4 in the 22-assembly core. The individual fuel plate power levels are obtained from the MCNP results for the LCC. The axial power distribution from the hottest plate in this core is used to normalize the power distribution in each plate. Hot channel factors are used to account for dimensional variations inherent in the manufacturing process, as well as variations in other parameters that affect thermal-hydraulic performance.

Table 2-8 Plate Relative Power Distribution

Plate Number	Plate Peak-to-Average Power
1	1.011
2	0.973
3	0.953
4	0.941
5	0.937
6	0.936
7	0.938
8	0.951
9	0.962
10	0.983
11	1.012
12	1.055
13	1.121
14	1.226

The grid plate, which supports the four fuel assemblies in each fuel box, is included in the hydraulic analysis. The hydraulic model in PLTEMP assumes that the hydraulic resistance for each coolant path, from the bottom of the grid plate to the region above the fuel plates, has two components, a form or k_{loss} and a frictional loss. For each of the channels, the pressure drop is calculated using these loss coefficients. The single value k_{loss} represents not only the form losses at the inlet and exit to the fuel plates, but also the hydraulic resistance due to the grid plate. Also, there are multiple parallel flow paths through each fuel box that are considered in this hydraulic analysis. For each channel the flow passes first through the grid plate and then through the fuel assembly region.

PLTEMP determines the friction factors and coolant mass flow rates in each channel and then calculates the steady-state temperature distribution in the meat, cladding, and coolant at each axial node. The computational process begins at the inlet end of the channel, and proceeds level-by-level to the channel outlet.

PLTEMP was used to model all fuel plates and coolant channels defined by the four fuel assemblies inside a single fuel box. The analyses considers heat transfer and pressure drop calculations, and the impact of flow regime (i.e., laminar and turbulent flow). PLTEMP has been used to analyze several plate reactors under the ANL Reduced Enrichment for Research and Test Reactors (RERTR) Program.

The licensee used four hot channel factors in the analysis to account for random and systematic uncertainties. Random hot channel factors account for uncertainties in local heat flux (F_q), enthalpy rise in the coolant channel (F_{bulk}), and film temperature rise (F_{film}). A systematic

uncertainty of 20 percent is assigned to the heat transfer coefficient and the hot channel factor (F_h) applied to all fuel plates in the analysis. The licensee quantified the hot channel factors by using either fuel plate manufacturing specifications or engineering judgment. In quantifying the hot channel factors, the licensee gave special consideration to the fact that the UFTR core operates under laminar flow conditions and that each fuel plate has two associated coolant channels, one on each side.

As stated in SAR Section 4.6.2, the heat source from fission is assumed to be flat across the meat and along the width of a fuel plate, but varies axially. The licensee utilized a computational fluid dynamics code (STAR-CD) to model a single fuel plate, with and without a power profile along the width of the fuel. The results of this calculation showed that the conductivity of the fuel plate is sufficient to flatten the temperature profile along the width of the fuel plate so that modeling this power distribution is unnecessary. The NRC staff accepts this approximation.

The licensee used two thermal-hydraulic phenomena to gauge the thermal margin. The ONBR is calculated by using the Bergles-Rohsenow correlation. The margin to departure from nucleate boiling (DNB) is evaluated by calculating the departure from nucleate boiling ratio (DNBR) using the 2005 Groeneveld Lookup Table.

ONB is used as a precursor to flow excursion. When the channel pressure drop begins to increase with decreasing flow because of boiling, a necessary condition is created for flow excursion. The licensee employs a conservative criterion for establishing Limiting Safety System Settings (LSSSs) that protects against exceeding the SL. It is based on the premise that by preventing the ONBR from falling below 1.0, there would be no boiling-induced flow instability that could lead to burnout of the fuel cladding. For a nominal coolant flow rate of 39 gallons per minute (gpm), 100 °F inlet temperature, and 110 kWt reactor power, the calculated ONBR is 1.023. This indicates that there is no potential for the onset of boiling-induce flow instability. Similarly, the licensee's analysis shows that the DNBR is 285.4, which not only indicates that there is no potential for the departure from nucleate boiling, but it is also below the threshold where the DNBR correlations are even valid.

Confirmatory Analysis

The NRC staff performed a confirmatory analysis using the TRAC/RELAP Advanced Computational Engine (TRACE) computer code. The model of the UFTR is shown in Figure 2-9. In this model the limiting fuel box is modeled as five regions:

- Heat structure (62) and its associated PIPE component represent the power and flow associated with Plate 1 of assembly 2-3;
- heat structure (61) and its associated PIPE component represent the power and flow associated with Plates 2-13 of assembly 2-3;
- heat structure (63) and its associated PIPE component represent the power and flow associated with Plate 14 - the hot (limiting) plate of assembly 2-3;
- heat structure (64) and its associated PIPE component represent the power and flow associated with Assemblies 2-1, 2-2, and 2-4; and

- the secondary PIPE connected to the PIPE associated with Heat structure 61 is to optionally describe bypass flow but is not used in this analysis.

Each heat structure is represented by 20 axial nodes and 30 radial nodes. Each PIPE component is represented by 24 axial cells in which only cells 3 through 22 are connected to the corresponding heat structure cells. The remaining cells represent the unheated portions of the fuel assemblies and the region below and above the fuel assemblies. Boundary conditions consisting of forced coolant flow rate, inlet temperature and pressure, at the normal operating conditions are prescribed to the model. The calculations are performed at a series of ramped powers, followed by plateaus culminating in the LSSSs power of 110 kWt.

The power distribution used is determined first by apportioning the total reactor power to the assemblies. Using the information supplied by the licensee and shown in Figure 2-6, the assembly power distribution for a reactor power level of 100 kWt is shown in Figure 2-7.

4.14	4.59		4.73	4.36		3.64	0.00
4.55	5.09		5.25	4.86		3.95	3.59
4.68	5.23		5.45	5.18		4.27	3.77
4.27	4.77		4.95	4.73		3.95	0.00

Figure 2-7 22-Assembly BOL Power Distribution at 100 kWt

Using the same peaking factors, the power at 110 kWt is then shown in Figure 2-8.

4.55	5.05		5.20	4.80		4.00	0.00
5.00	5.60		5.77	5.35		4.35	3.95
5.15	5.75		5.99	5.70		4.70	4.15
4.70	5.25		5.45	5.20		4.35	0.00

Figure 2-8 22-Assembly BOL Power Distribution at 110 kWt

The plate powers are then apportioned by using the plate power distribution information supplied by the licensee in Table 2-8. The axial power distribution in each plate is determined by modifying the plate average power using the axial relative power distribution in Figure 2-6.

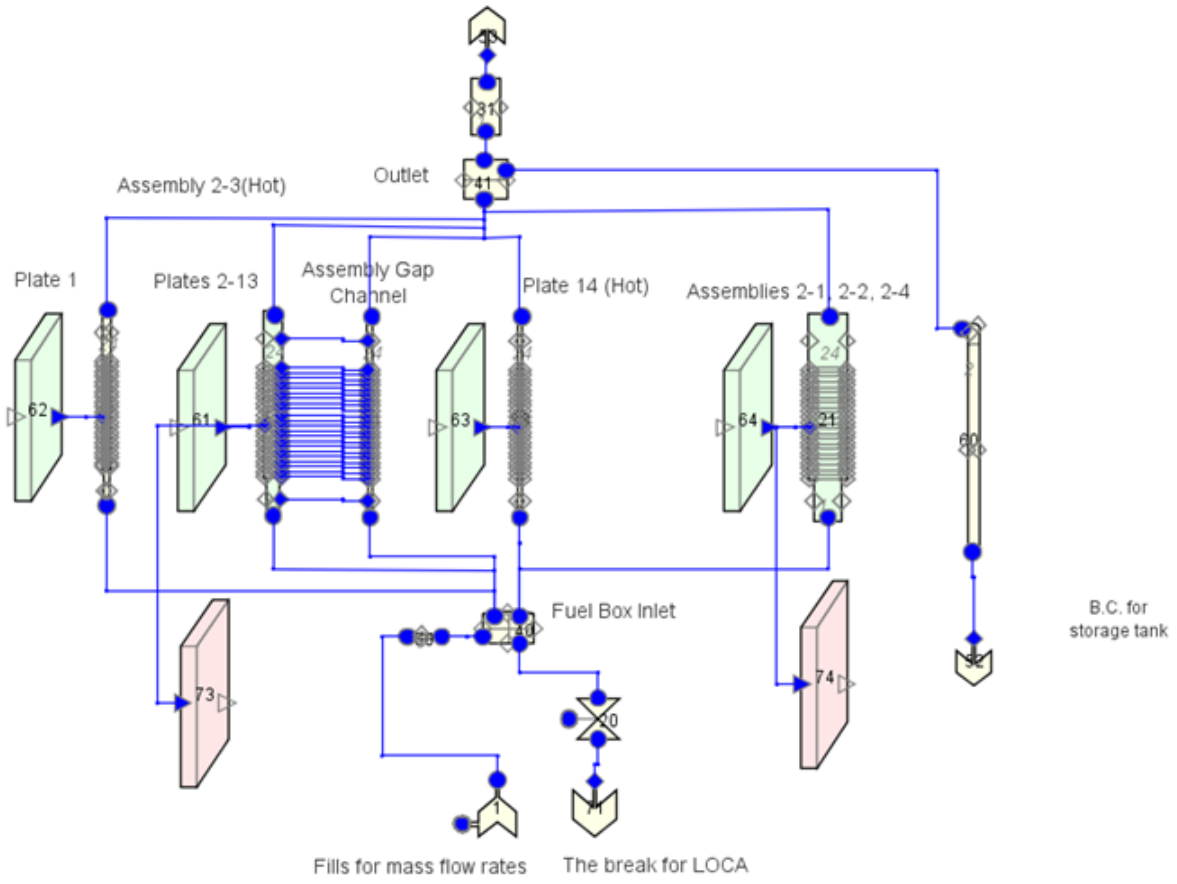

Figure 2-9 Confirmatory T&H Model

The conditions and results are detailed in Table 2-9. The confirmatory calculations assumed the operation of UFTR at 110 kWt using the skewed power distribution from the LCC for nominal conditions. The results of the analyses summarized in Table 2-9 demonstrate that the high thermal conductivity of the fuel design and the conservative operating power results in fuel and cladding temperatures that are much lower than the SL. These conclusions are not likely to change even if additional uncertainties are applied that can account for random and systemic variabilities. The differences in the analyses performed by the licensee and the NRC confirmatory calculations are attributed to the consideration of these uncertainties by the licensee.

Table 2-9 Analysis Conditions and Results

Nominal condition	Confirmatory Analysis
Inlet temperature (°C)	39.5
Inlet mass flow rate to all six fuel assemblies (gpm)	39
Inlet mass flow rate to the fuel assembly with the highest fuel power (gpm)	6.5
Reactor Power (kWt)	116
Power to the hot fuel box (kWt)	22.54
Maximum Fuel Temperature (ºC)	60.7
Maximum Cladding Temperature (ºC)	60.7
Mixed mean coolant outlet temperature (ºC)	52.7
Maximum coolant outlet temperature (ºC)	56.2
Minimum DNBR	not applicable

The LSSSs, specified as follows, are the reactor safety system setpoints that help ensure that automatic protective action is initiated to terminate an abnormal condition:

TS 2.2 Limiting Safety System Settings

Specification: According to Table 2.2-1.

Table 2.2-1
Limiting Safety System Settings

	FUNCTION	ALLOWABLE VALUE
1.	High Reactor Power Trip	≤ 110% RTP
2.	Low Reactor Coolant Flow Trip	≥ 41 gpm
3.	High Reactor Coolant Bulk Inlet Temperature Trip	≤ 102ºF

The entries in TS Table 2.2-1 are the setpoints that provide the specification for the UFTR LSSS. They apply in Mode 1 and Mode 2. This specification helps to ensure that the LCOs of the UFTR are bounded by the T&H analysis supplied by the licensee and confirmed by the NRC staff. The licensee provides T&H analyses in SAR Section 4.6 that demonstrates the fuel temperature is less than the SL of the UFTR using the PLTEMP/ANL computer code, which has been used in other similar research reactor applications. In the response to RAI 2 (Ref. 24), the licensee provided an updated analysis using the revised neutronics discussed in Section 2.6 of this SER. These results are confirmed by analysis performed by the NRC staff. The comparisons show acceptable agreement and the resulting fuel temperatures are significantly lower than the SL and are also lower than the ONBR design value. The NRC staff finds that the margin of safety to fuel damage is quite large and is indicative of safe operating conditions with adequate margins. On the basis of this information, the NRC staff concludes that the LSSS are acceptable.

The NRC staff concludes that:

- The information in the SAR includes the T&H analyses for the reactor. The licensee submitted information justifies the assumptions and methods and validates their results.

- All necessary information on the primary coolant hydraulics and thermal conditions of the fuel are specific for this reactor. The analyses use the limiting conditions of these parameters to help ensure fuel integrity.

- The LSSSs in the TSs are justified by the T&H analyses. The T&H analyses on which these parameters are based ensure that overheating during any operation or credible event will not cause loss of fuel integrity and unacceptable radiological risk to the health and safety of the public.

2.8 Fuel Storage

SAR Section 9.2.1 describes UFTR new fuel storage and Section 9.2.2 describes spent fuel storage. According to SAR Reference 9.1, analysis assures that the k_{eff} of such locations is less than 0.8 under all conditions. TS 5.4 specifies the design requirements for new and irradiated fuel storage as follows:

TS 5.4 Fuel Storage

Specification:

1. The k_{eff} of all fuel, including fueled EXPERIMENTS and fueled devices, in storage shall be no greater than 0.90.

2. Irradiated fuel, including irradiated fueled EXPERIMENTS and irradiated fueled devices, in storage shall be stored in a manner that permits sufficient natural cooling.

TS 5.4 establishes the limits for the reactivity and cooling of fuel stored in locations other than the core. This specification helps to ensure that the reactivity of stored fuel cannot be greater than 0.9 under any conditions of moderation and reflection so as to prevent criticality and that fuel has sufficient cooling. TS 5.4 limits the k_{eff} value to no greater than 0.9, which is the commonly used value in other approved research reactor applications and is consistent with the guidance in ANSI/ANS-15.1-2007 and NUREG-1537, Section 9.2. On the basis of this information, the NRC staff concludes that TS 5.4 is acceptable.

The NRC staff concludes that the TSs on fuel storage conditions are sufficient to ensure subcriticality, prevent excessive temperatures, and administratively and physically control the fuel.

2.9 Conclusions

Based on the above considerations, the NRC staff concludes that the licensee has presented adequate information and analyses to demonstrate the technical ability to configure and operate the UFTR without undue risk to the health and safety of the public or the environment. The NRC staff concludes that the UFTR TSs for the reactor design, reactor core components, reactivity limits, thermal-hydraulic limits, and related surveillance requirements and actions provide reasonable assurance that the reactor will be operated safely in accordance with the TSs during the period of the renewed facility operating license.

3. REACTOR COOLANT SYSTEMS

3.1 Summary Description

Safety analyses report (SAR) Chapter 5 provides information pertaining to the University of Florida Training Reactor (UFTR) coolant systems. Demineralized light water is used as the primary coolant. During normal operation, this cooling is accomplished via forced convection through the primary system with waste heat disposed to the environment via the secondary coolant system.

The reactor coolant system for the UFTR is composed of the subsystems and components listed below:

- primary coolant system (refer to Figure 3-1 from SAR Figure 5-1)
- coolant storage tank
- primary coolant pump
- heat exchanger
- secondary coolant system (refer to Figure 3-2 from SAR Figure 5-2)
- primary coolant cleanup system
- primary coolant makeup water system
- nitrogen (N)-16 control system

3.2 Primary Coolant System

The primary coolant system is described in SAR Section 5.1. The primary coolant is pumped into the bottom of the fuel boxes and upward over the fuel plates and then returned by gravity through side orifices in the fuel boxes to the coolant storage tank. The coolant is then pumped through a heat exchanger where the primary coolant transfers the heat from the reactor to the secondary coolant system. The entire primary coolant loop is contained within the reactor building.

During 2009, the entire primary piping system was replaced due to pin-hole leaks that developed in the return lines to the fuel boxes. The leaks were determined to be caused by pitting corrosion resulting from portions of the primary piping being embedded in the concrete foundation for the reactor structure. To avoid similar problems in the future, the new piping system, the inlet, outlet, and vent pipe, are routed around the concrete through the trench area just below the reactor fuel boxes. The licensee has installed additional aluminum supports, which are bolted to the floor, to provide structural support for the piping. As a result, the revised primary piping system for the UFTR now includes additional flow restrictions in the form of two additional 45-degree bends and additional length in the approach pipes (towards the fuel boxes) and an additional 90-degree bend in one of two return pipes. Based on the facility modifications to the primary system, the NRC staff added a review of the UFTR primary coolant system to the scope of the focused review per the graded approach outlined in the Interim Staff Guidance (ISG) for license renewal (Ref. 54).

The UFTR primary coolant system is shown in Figure 3-1 (reproduced from SAR Figure 5-1). The demineralized primary water is stored in a 200-gallon coolant storage tank, which is approximately six times larger than the 33-gallon capacity of the reactor core boxes. A temporary hose connection is used to provide makeup water through an orifice located on the storage tank. Before entering the storage tank, city water passes through two demineralizers in series to remove any contaminants. The primary coolant is drawn from the storage tank by the primary coolant pump and circulated near atmospheric pressure at a flow rate of approximately 46 to 48 gallons per minute (gpm) limited by a ball valve in the pump discharge line. The coolant flows through the heat exchanger before being delivered to the six fuel boxes that make up the reactor core. Water flows up and around the fuel, rising to the top of the fuel boxes, where it is discharged through orifices located on the sides of the fuel boxes. Coolant from the six fuel box side orifices is then piped by gravity back into the coolant storage tank.

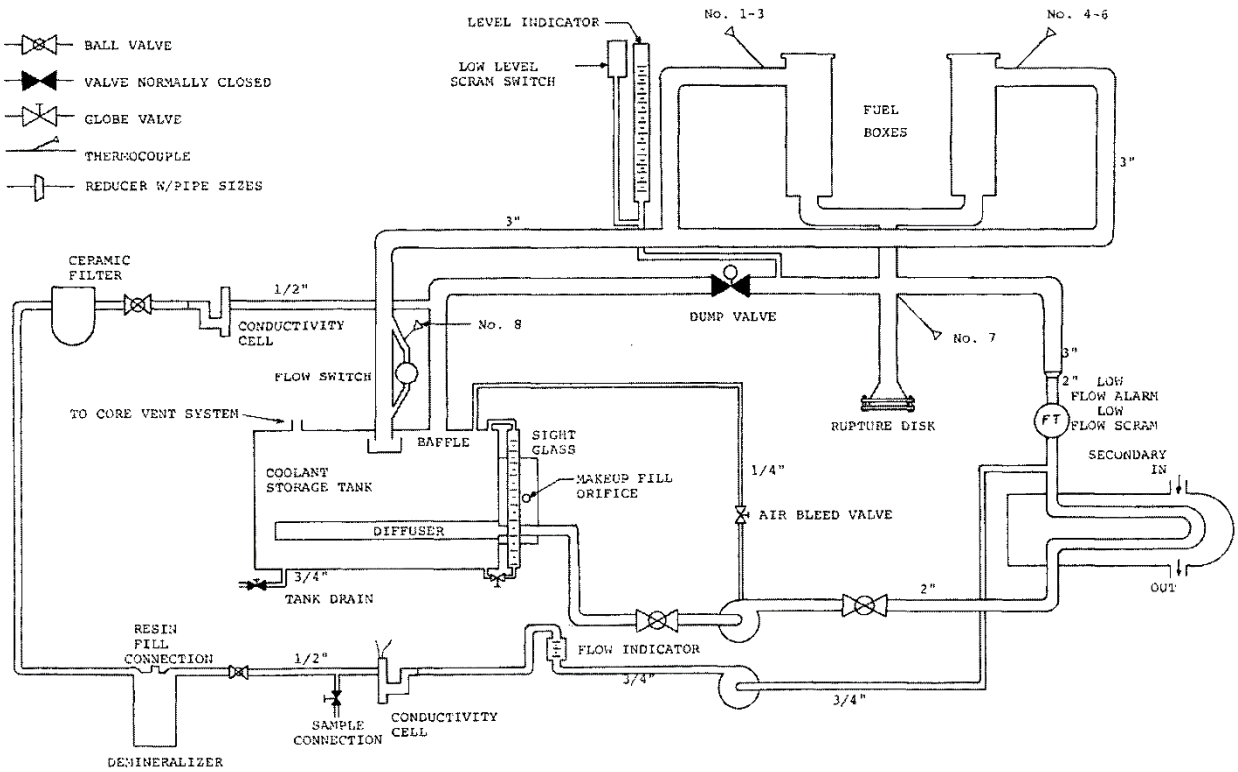

Figure 3-1 UFTR Primary Coolant System

SAR Section 5.2 provides the following information regarding the major components of the primary coolant system:

- Coolant Storage Tank - The primary coolant is stored in the coolant storage tank that has a capacity of 200 gallons of water (i.e., approximately six times greater than the capacity of the reactor core boxes).

- Primary Coolant Pump - Rated at 65 gpm, the primary coolant pump draws suction from the primary storage tank and circulates the water through the heat exchanger before delivering it to the fuel boxes. Normal flow is about 46 to 48 gpm. Flow from the coolant storage tank is controlled by a ball valve in the pump discharge line.

- Heat Exchanger - The heat exchanger is a 316 stainless steel tube and shell heat exchanger, with one pass on the shell side and four passes on the primary side. It is designed to circulate up to 250 gpm of secondary water through the shell side and up to approximately 75 gpm of reactor coolant water through the tube side for removal of up to 500 kilowatt thermal (kWt) of heat. The tubes are seal-welded to the tube sheet to minimize leakage.

- Dump Valve - The dump valve is a solenoid-operated valve that opens automatically when actuated by a demand or trip (scram) signal, allowing water in the fuel boxes to drain into the coolant storage tank. Prior to reactor operation, the dump valve is shut and the primary coolant pump is started to supply the necessary moderation and cooling for full-power reactor operation.

- Core Water Level Indicator - Core water level is indicated by a sight glass. A level switch located with the sight glass is wired to the reactor protection system actuating a reactor trip when the water level in the core falls below the preset limit.

- Rupture Disc - A graphite rupture disc is designed to burst at approximately 2 pound-force per square inch (psi) above the normal operating system pressure. Should a pressure excursion occur, this diaphragm would rupture causing, the water from the core to be drained into the equipment storage pit. This would cause a reactor shutdown independent of the control blades.

The UFTR Argonaut has a unique design feature, which is the ability to rapidly drain (dump) the water from the core region into the coolant storage tank by opening the dump valve. According to the licensee's response to RAI 7.b.ii (Ref. 24), the core water dump time is approximately 12 seconds for a reactor full trip (blade insertion and water dump) where the primary coolant pump is off and dump valve is open, and 75 seconds if the primary coolant pump is turned off and the dump valve is not open (see Figure 3-1 above). The temperature rise from rapidly draining the coolant from the reactor core is discussed in the response to RAI 4 (Ref. 24). The analysis indicates that the maximum increase in fuel temperature from dumping the coolant is approximately 14 degrees Celsius (°C). The NRC staff concludes that, based on a review of the DNBR, transient and accident analysis in Section 2.7 of this safety evaluation report (SER), and on the information provided by the licensee, this 14 °C temperature rise, added to the rise in fuel temperatures for all considered events, results in fuel temperatures still substantially below the UFTR SL (986 °F (530 °C)).

The licensee considered a range of parameters (temperatures of 10 to 100 °C, flow rates of 25 to 65 gpm, and roughness in the pipes from 25 to 75 micrometers) to bound all conditions likely to occur in evaluating the flow conditions for the new UFTR primary piping system. The licensee calculated the losses due to gravity to range from 19,200 to 20,000 Pascal in the approach piping. Losses due to friction and form (the pipe bends) ranging from 77 to 653 Pascal based on Reynolds numbers between 20,000 and 230,000. Thus, losses due to the new approach piping configuration are negligible as compared with the loss due to gravity. Similarly, the additional flow restrictions on the return pipe produce resistances that are less than one percent of the driving force due to gravity and are also negligible.

These changes increase the pressure losses and the required pumping power at constant flow rate (or decrease flow rate at constant pumping power) and reduce the maximum coolant return

flow rate; the change is insignificant relative to the resistance to flow (or driving force) provided by gravity. Based on a review of the information provided by the licensee, the NRC staff concludes that safe operation of the UFTR is not affected by the new routing of the primary piping.

TS 5.2 specifies the design requirements for the primary system to ensure that primary coolant will be available to provide adequate cooling of the reactor core as follows:

TS 5.2 Reactor Coolant System

Specification:

1. The reactor coolant water flow path shall be from the storage tank located in the equipment pit to the reactor coolant pump then through the heat exchanger up to the bottom of the fuel boxes, upward past the fuel assemblies to overflow pipes and into a header for gravity-driven return to the storage tank.

2. The reactor coolant system shall contain a rupture disc designed to break at approximately 2 psi above normal operating system pressure. Breakage of the rupture disc shall cause water from the core to be drained into the equipment storage pit.

TS 5.2.1 establishes the requirement for the expected flow path and principle components of the primary cooling system. The NRC staff reviewed the reactor coolant water flow path during site visits and finds the system is consistent with the description in the SAR, and SER Figure 3-1 above. The NRC staff also finds that TS 5.2.1 helps to ensure that the primary design features of the UFTR coolant system are maintained to be consistent with the thermal-hydraulic analysis that supports the LSSS set points.

TS 5.2.2 establishes the requirement for a rupture disc designed to break at approximately 2 psi above normal operating system pressure, and cause water from the core to be drained into the equipment storage pit. The NRC staff reviewed the rupture disc configuration during site visits and finds that the rupture disc configuration is consistent with the description the SAR and SER Figure 3-1 above. The NRC staff also finds that the rupture disc supports assumptions used in the loss of coolant accident (LOCA) analysis, SER Section 6.3.

The NRC staff finds that TS 5.2.1 and TS 5.2.2 helps ensure that the design features of the UFTR primary coolant system are maintained consistent with SAR. Based on the information provided above, the NRC staff concludes that TS 5.2.1 and TS 5.2.2 are acceptable.

TS 3.3.1 concerns detection of reactor coolant system leakage:

TS 3.3.1 Leak Detection

Specification: The equipment pit water level sensor shall provide an alarm if water level in the equipment pit is greater than 1 inch above equipment pit floor level.

ACTION

	CONDITION	REQUIRED ACTION		COMPLETION TIME
A.	Channel inoperable.	A.1	Restore operability	15 minutes

SURVEILLANCE REQUIREMENT

	SURVEILLANCE	FREQUENCY
SR 3.3.1	Perform a CHANNEL TEST	Weekly

TS 3.3.1 establishes that the maximum water level allowable in the equipment pit for Mode 1 and Mode 2 as 1 inch above the equipment pit floor level. The NRC staff reviewed the reactor design and finds that this level detection will help ensure that water capacity in the equipment pit is sufficient to allow operation in Modes 1 or 2, and accept the water from actuation of the rupture disc (see SER Section 4.4). The NRC staff also finds that the leak detection provides an indication of possible primary loop water leakage. Based on the information provided above, the NRC staff concludes that TS 3.3.1 is acceptable.

The action statement for TS 3.3.1 provides guidance to the operator in the event that equipment pit water level sensor is inoperative and allows 15 minutes to restore the sensor to operation. If the sensor cannot be restored, the reactor is shut down. The NRC staff finds that the action and the corresponding completion time is reasonable and appropriate. Additionally, 15 minutes is a reasonable amount of time to restore the sensor to operation without disrupting continued reactor operations. Based on this information, the NRC staff concludes the action statement for TS 3.3.1 is acceptable.

SR 3.3.1 establishes the requirement to perform a channel test weekly. The NRC staff finds that SR 3.3.1 helps ensure that the leak detection system is maintained operable to support operation in Mode 1 and Mode 2. The NRC staff also finds that the SR 3.3.1 weekly surveillance frequency is consistent with the guidance in NUREG-1537, “Guidance for Preparing and Reviewing Applications for the Licensing of Non-Power Reactors,” issued February 1996 (Ref. 51) and ANSI/ANS-15.1-2007, “The Development of Technical Specifications for Research Reactors” (Ref. 55). Based on the information provided above, the NRC staff concludes that TS 3.3.1 and SR 3.3.1 are acceptable.

TS 3.3.2 states:

TS 3.3.2 Reactor Coolant System Water

Specification: The electrical resistivity of reactor coolant system water shall be no less than 0.5 MΩ-cm averaged over a period of four hours.

SURVEILLANCE REQUIREMENT

	SURVEILLANCE	FREQUENCY
SR 3.3.2	Verify resistivity is within the limit	Daily

TS 3.3.2 limits the electrical resistivity of the reactor coolant system water in contact with in-core fuel assemblies to no less than 0.5 megohm-centimeters (MΩ-cm) averaged over a period of

four hours. The average over four hours is intended to allow for minor fluctuations associated with the resistivity of the water that the licensee can attribute to other causes, such as aeration of the primary coolant system when the primary pump is initially started or experiments and surveillances that require the introduction of other gasses, such as nitrogen. In reality, although the surveillance is only required daily, the licensee has a continuous monitor of resistivity that alarms in the control room if resistivity is less than 0.5 MΩ-cm. Under TS 3.0.2 (discussed in Section 7.3 of this SER), as soon as the meter alarms, by procedure the operator is required to take action because of failure to meet the associated LCO. The licensee states that the cleanup system, discussed in Section 3.4 of this SER, will act to restore the water purity, which can be observed on the inline continuous resistivity meter. If the operator does not observe the resistivity trending upward or water quality cannot be restored in the four hour period, the reactor must be shutdown, such that no water is in contact with the fuel (i.e., full trip as described in in SAR Section 7.3.1 and discussed in Section 3.2 and Section 4.4 of this SER.) The NRC staff finds that TS 3.3.2 helps to control corrosion in aluminum and stainless-steel components in water systems. The TS 3.3.2 resistance value is equivalent to a conductivity value of 2×10^{-6} mhos/cm, which is less than the value in the guidance in NUREG-1537 of less than 5×10^{-6} mhos/cm. Based on the information provided above, the NRC staff concludes that TS 3.3.2 is acceptable.

SR 3.3.2 requires the licensee to verify that the primary coolant system water electrical resistivity is within the limit of TS 3.3.2 on a daily periodicity. The NRC staff finds that this SR helps to ensure that the primary coolant water quality is effectively monitored and controlled, which will minimize adverse corrosion effects on the aluminum and stainless-steel components. The NRC staff also finds that SR 3.3.2 is consistent with the guidance in NUREG-1537 and ANSI/ANS-15.1-2007, which is weekly to quarterly. Based on the information provided above, the NRC staff concludes that SR 3.3.2 is acceptable.

The NRC staff completed an analysis (Ref. 82) that demonstrated that a conductivity limit no greater than 5×10^{-6} mhos/cm will ensure that the pH range is limited to 5.6 to 5.8, which is consistent with the guidance in NUREG-1537 to maintain the pH range of 5.0 to 7.5. Since the licensee chose a conductivity TS less than this limit, there is no need for a TS requirement to limit the reactor primary coolant pH.

The NRC staff reviewed the information provided in the SAR, as supplemented by the licensee's responses to RAIs, and finds that the primary coolant system is designed in accordance with the design bases derived from the analyses presented in the SAR. The NRC staff also finds that the primary coolant system is sufficient to remove the fission heat from the fuel during reactor operations, and is capable of shutting down the reactor by actuation of the dump valve, if required. The NRC staff also finds that the chemical control of the primary coolant water will help limit corrosion of fuel and other critical reactor components. The NRC staff also finds that the TSs and SRs will provide reasonable assurance that the operability of the reactor primary pool coolant system is as described in the SAR. Based on the information provided above, the NRC staff concludes that there is reasonable assurance that the primary coolant system will function safely for the renewal period.

3.3 Secondary Coolant System

The UFTR secondary system is described in SAR Section 5.3 and shown in SER Figure 3-2 below (reproduced from SAR Figure 5-2). The licensee indicates that heat generated by operation of the reactor is removed from the primary cooling system to the secondary cooling

system. According to SAR Section 5.3, there are two sources of water for this secondary cooling system: the deep well is used for most reactor operations and the city water line is used as a back-up system during operation above 1 kWt. The well water is pumped by a submersible, 10 horsepower pump.

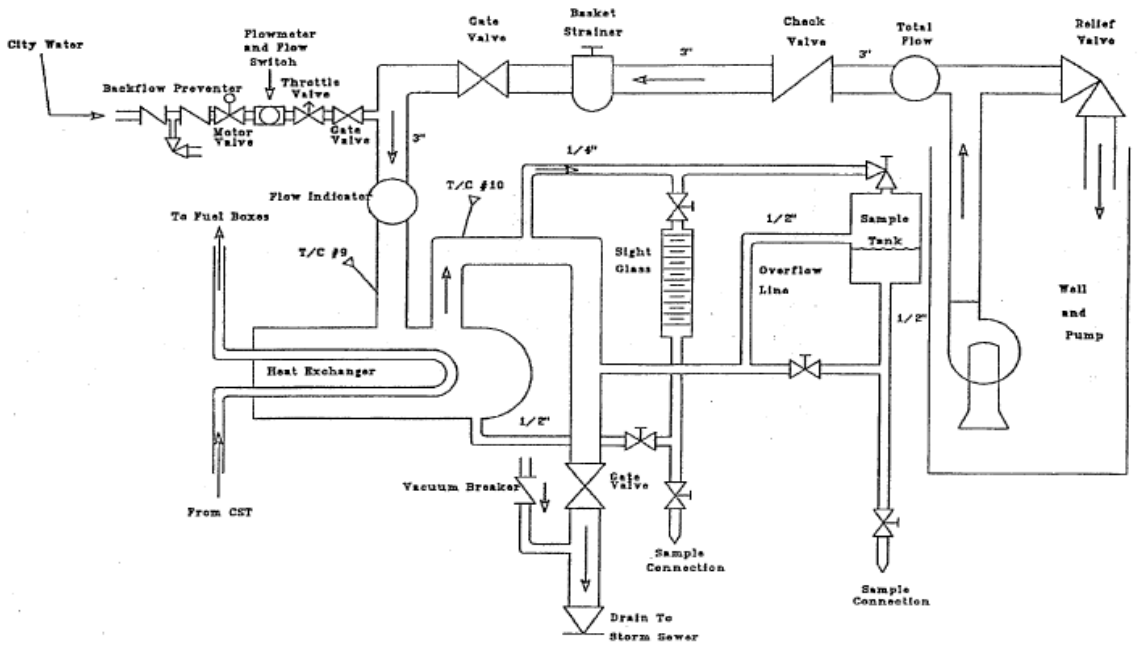

Figure 3-2 UFTR Secondary Water Cooling System

SAR Section 5.3 indicates that the deep well is approximately 238 ft deep with a casing diameter of 3 inches. The static water level is approximately 87 ft below grade. The well pump capacity is approximately 200 gpm. The well water flows through a basket strainer then into the shell side of the heat exchanger and subsequently into the storm sewer. A flow-measuring instrument located on the input line for the heat exchanger monitors the secondary flow rate. At predetermined setpoints, dependent on the secondary water source and power level, warning signals and trips are transmitted to the control room. The pressure of the secondary coolant system is maintained higher than the primary system to prevent radioisotope contamination of secondary water. The secondary coolant system is tested for radioactive contamination weekly by procedures.

SAR Section 5.3 states the pressure of the secondary water is maintained higher than the primary system to prevent contamination of secondary coolant. In response to RAI 5-2 (Ref. 5), the licensee stated that the normal operating pressure of the primary coolant system is one atmosphere (14.7 psi), and that the normal operating pressure for the secondary is not monitored. However, since the secondary flow rate is about four times higher than the primary flow rate, the secondary water dynamic pressure is expected to be higher than the primary system pressure. If a significant leak developed at the primary/secondary boundary, the resistivity of the primary water is expected to change. Resistivity of the reactor coolant is constantly monitored and controlled by TS 3.3.2. Although highly unlikely, the licensee also provided an analysis of a potential primary to secondary leak. The licensee assumed a lengthy operation at full power to provide for the most activation in the primary system. The licensee noted that the only significant activity seen in the samples of primary coolant analyzed on a

weekly basis is sodium-24 (any N-16 decays too quickly to reach the environment). The licensee used conservative assumptions for sodium in the primary coolant system, irradiation time, neutron flux level, and 140 gpm well water flow. For an assumed leak rate of 1 liter per hour continuing undetected for 1 hour with 1 ppm sodium in the primary coolant system, the licensee calculated a concentration of 2.8E-06 uCi/ml, which is less than the effluent release limit concentration of 5E-5 uCi/ml for Table 2 of Appendix B to 10 CFR Part 20 for water. The licensee also noted that leakage from the primary to the secondary would be significantly diluted and, by design, would immediately enter the storm sewer system for further dilution.

The NRC staff reviewed the information provided in the SAR, as supplemented by the licensee's responses to RAIs, and finds that the secondary coolant system is designed in accordance with the design bases derived from the analyses presented in the SAR. The NRC staff also finds that the secondary coolant system will allow the transfer of heat from the primary coolant system, which was generated from the operation of the reactor. Based on the information provided above, the NRC staff concludes that there is reasonable assurance that the secondary coolant system will function safely for the renewal period.

3.4 Primary Coolant Cleanup System

SAR Section 5.4 describes the primary coolant cleanup system, which consists of a flow loop connected to the primary coolant system. The flow loop is supplied with a separate pump allowing continuous purification flow. The flow of the primary coolant pump is sufficient to maintain a flow through the purification loop when it is in operation. The components of the primary coolant cleanup system are shown in this SER Figure 3-1.

SAR Section 5.4 indicates that the purification system is designed to provide continuous monitoring of the resistivity of the primary water. Nuclear type resin (H-OH; pH control; AMBERLITETM or equivalent) is used in the purification system demineralizer. An in-line resistivity bridge is set up to accept two conductivity cell signals - one upstream of the demineralizer and one downstream.

The NRC staff reviewed the description of the primary coolant cleanup system in the SAR and finds the system adequate to control the quality of the primary coolant in order to limit the potential corrosion effects of the reactor fuel and other primary system components in contact with the primary coolant water. Based on the information provided above, the NRC staff concludes that there is reasonable assurance that the primary coolant makeup system will function safely for the renewal period.

3.5 Primary Coolant Makeup Water System

SAR Section 5.5 indicates that demineralized water is used as makeup to the primary coolant system and the shield tank through a hose connection fitted with a back-flow preventer. The makeup system consists of demineralizers, connected to the city water system, filled with H-OH nuclear type resin. The licensee installed a backflow preventer to help ensure that primary coolant would not backflow into the city water system.

The NRC staff reviewed the description of the primary coolant makeup water system in the SAR and finds that the system is sufficient to provide replacement water for the primary coolant system lost during reactor operation. Based on the information provided above, the NRC staff

concludes that there is reasonable assurance that the primary coolant makeup water system will function safely for the renewal period.

3.6 Nitrogen-16 Control System

SAR Section 5.6 describes the N-16 shielding. N-16 is produced when oxygen in the primary coolant is irradiated by the neutrons from the reactor. The N-16 radionuclide has a half-life of 7.13 seconds and is controlled by shielding or retaining the primary coolant for enough time to allow for decay. As described in SAR Section 5.6, portions of the primary coolant system that are subject to coolant flow are located in the primary equipment pit or, in the case of the fuel boxes, in the center of the core shielding structure. For operation at 1 kWt or above, concrete block shielding is added to the top of the equipment pit. Entry into the equipment pit is permitted no sooner than 15 minutes after shutdown from power operation to allow time for N-16 decay.

The NRC staff reviewed the description of the N-16 shielding in the SAR and finds that the design of the N-16 control system, along with the licensee's radiation protection program and ALARA program discussed in Chapter 5 of this SER, are effective to limit personnel exposures from N-16 to below the radiation exposure limits in 10 CFR Part 20. Based on the information provided above, the NRC staff concludes that there is reasonable assurance that the N-16 shielding will function safely for the renewal period.

3.7 Conclusions

The NRC staff reviewed and evaluated the design and operation of the UFTR coolant systems and associated TSs and SRs. Based on the information provided above, the NRC staff concludes that the design and operation of the reactor coolant systems are acceptable for the following reasons:

- The UFTR coolant systems are adequate to remove heat from the fuel and prevent loss of fuel integrity under normal full-power operating conditions at 100 kWt.

- There is reasonable assurance that any accidental leakage from the primary coolant system would be contained within the UFTR facility. As a result, there would not be significant radiation exposure to the public in the event of such leakage.

- The TSs and SRs provide reasonable assurance that the cooling system will operate as designed and as described in the SAR and be adequate for reactor operations as described in the SAR.

- The water purification system will control chemical quality of the primary coolant to limit corrosion of the reactor fuel and other systems that contact primary coolant.

- The design of the N-16 control system, along with the licensee's radiation protection and ALARA program, are effective to reduce the level of radioactivity in the reactor cell from N-16, and help to maintain personnel exposure below the limits in 10 CFR Part 20.

Based on the information described above, the NRC staff concludes that the UFTR primary and secondary coolant systems, and supporting systems, are adequate, and there is reasonable assurance that they will function safely for the renewal period.

4. INSTRUMENTATION AND CONTROL SYSTEMS

The University of Florida Training Reactor (UFTR) is licensed at 100 kilowatt thermal (kWt) steady state power with a maximum power of 119 kWt limited by the protection system. The instrumentation and control (I&C) systems used at the UFTR are similar to those used by other research reactors operating in the United States. The instrumentation provides indication of process variables, reactor core nuclear parameters, radiation levels at various locations throughout the facility, effluent activity levels, alarms, and other parameters necessary to allow safe operation and shutdown of the reactor and protection of personnel. The control systems provide flexible and reliable control of the reactor during all stages of operation and shutdown. In reviewing the licensee's annual reports (Refs. 28-40) and from observation during Nuclear Regulatory Commission (NRC) staff conducted inspections (Refs. 41-50), it was noted that the UFTR staff had made facility modifications to the I&C systems since the facility license was last renewed. Additionally, the licensee proposed the deletion of a number of technical specifications (TSs) related to the reactor protection system (RPS) and the designation of a significant number of other related TSs from limiting safety system settings (LSSSs) to limiting conditions for operations (LCOs), as discussed below in Section 4.2.3 of this safety evaluation report (SER). Based on this information, the NRC staff added a review of the UFTR I&C to the scope of the focused review per the graded approach outlined in interim staff guidance 2009-001, "Interim Staff Guidance on the Streamlined Review Process for License Renewal for Research Reactors" (Ref. 54).

4.1 Summary Description

According to SAR Chapter 7, the UFTR I&C are shared between the various systems that comprise the following:

- Reactor control system (RCS);
- RPS;
- Process instrumentation; and
- Radiation safety monitoring systems.

The system instruments are hardwired analog instrument-type, with the exception of portions of the temperature monitoring system that are of the digital system instrument-type. Additionally, several data recorders have been replaced with digital data recorders. Table 4-1 provides a summary of UFTR I&C systems and equipment.

4.2 Design of Instrumentation and Control Systems

The I&C systems used at the UFTR provide the operator with information needed to properly manipulate the nuclear controls. The I&C systems will initiate automatic protective trip functions (scrams) to maintain the facility within the safety limit (SL), as defined in the TSs and determined from the operating analyses in safety analysis report (SAR) Chapter 4 and the accident analyses in SAR Chapter 13.

Table 4-1 Summary of UFTR I&C Systems and Equipment

System	Subsystem	Components
Reactor Control System	Nuclear Instrumentation 1	B-10 proportional counter Fission chamber
	Nuclear Instrumentation 2	Uncompensated ion chamber Compensated ion chamber
	Automatic Control System	Servo-amplifier
	Control Blade Drive System	Digital blade position indicators Switches
	Interlock System	
	Monitoring System	
Radiation Monitoring Systems	Area Radiation Monitoring	Three independent energy compensated Geiger–Müller (GM) counters
	Reactor Monitoring Air System	Compact airborne particulate GM counter detector Air flow rate meter
	Stack Radiation Monitoring	GM tube
Process Monitoring and Control Systems	Primary Coolant System	Flow switches Level switches Thermocouples Laboratory view temperature acquisition package Resistivity bridge
Reactor Protection System	Control Blade Withdrawal Inhibit System	Bistable trip circuits
	Safety Channel 1	Fission chamber
	Safety Channel 2	Uncompensated ion chamber
	Process Monitoring and Control Systems	

4.2.1 Design Criteria

The safety-related I&C systems for the UFTR include the control console, the control and safety channels, the reactor interlock system, control drive switches, and the reactor scram circuitry. The I&C systems provide the following:

- information on the status of the reactor;
- the means for insertion and withdrawal of control blades;
- automatic control of reactor power level;
- the means for detecting overpower or loss of detector voltage and automatically shutting down the reactor to terminate operation; and
- monitoring of radiation and airborne radioactivity levels.

4.2.2 Design Basis Requirements

According to SAR Section 7.1.2, the primary design basis of the UFTR is the SL on fuel and cladding temperature. In order to remain within the SL to ensure continued maintenance of the fuel integrity, the RPS instrumentation will initiate reactor safety system trips to prevent the facility from exceeding the LSSSs identified in the UFTR TSs. The TSs required reactor trips are discussed below in Section 4.4 of this SER. Deviations from LCOs may be allowed under the TS for specified conditions as stated in action statements for a given LCO.

The licensee states that the excess reactivity insertion accident described in SAR Chapter 13 demonstrates that no automatic control or safety functions are needed to prevent reaching the fuel temperature SL. While the SL is not exceeded, the NRC staff notes that a large reactivity addition will cause the rupture disc to break, draining the primary coolant, as discussed in Section 6.2.2 of this SER (the rupture disc is described in SER Section 3.2). The NRC staff considers breakage of the rupture disc to be an abnormal event that should not be considered normal operation. However, the reactivity insertion analyses provided in SAR Section 13.2 for 74 percent-millirho per second (pcm/s) demonstrate the acceptability of the control blade reactivity insertion rate limits of no more than 74 pcm/s, as stated in TS 3.2.1.2, which is reviewed and found acceptable in Section 2.2.2 of this SER. The LCOs specified in the TSs are trip set points or operating limits chosen to ensure operation remains bounded by the thermal-hydraulic analysis described in SAR Chapter 4.

According to SAR Section 7.3.1, the UFTR RPS is capable of initiating two types of automatic reactor trips upon reaching an RPS setpoint. The first is a nuclear instrumentation-induced trip, or full safety system trip, in which the electromagnetic clutches engaging the control blades are deenergized, allowing the control blades to be inserted by gravity into the reactor core, and the primary coolant system water dump valve is opened to drain the primary coolant water into the storage tank. The second is a process instrumentation-induced trip, or blade-drop safety system trip, in which gravity insertion of the control rods into the reactor core occurs, just as in the full safety system trip, but no dumping of primary coolant water takes place.

4.2.3 System Description

SAR Section 7.2.2 provides the information for the nuclear instrumentation channels. The nuclear instrument channels and the process instrument channels provide inputs to the RCS, thereby providing the means to safely control the reactor and avoid or mitigate accidents. In addition to providing the operator with the information needed to properly manipulate the reactor controls, the nuclear instrumentation channels initiate automatic protective features if preset limits are exceeded. The TS associated with these system features are in the “Proposed TS changes” discussed later in this section of the SER. The specific channels that perform these functions include the following:

<u>Nuclear Instrumentation Channel 1</u>. This channel monitors the rate of growth of the neutron flux or power level. Reactor trips, operating on a one-out-of-one logic scheme, are provided in this channel for a period less than 3 seconds and reactor power at 110 percent of full power (see TS 3.2.2, discussed in Section 4.4 of this SER). A reactor trip also occurs if the nuclear detector chamber high-voltage drops below 90 percent. The low detector high-voltage scram is not a TS-required reactor trip (as discussed in “Proposed TS changes” later in this section of the SER); however, the trip provides defense-in-depth for the system.

TS 3.2.1.3 specifies a control blade withdrawal interlock on the wide-range drawer to ensure that a reactor startup can only commence if the neutron source counts are sufficient (2 count per second (cps)), indicating that the low-level neutron monitoring channel is operating properly. Additionally, the period signal is obtained through a derivative circuit in the Nuclear Instrument Channel 1 that produces a voltage proportional to the inverse of the reactor period. Control blade withdrawal is also inhibited if reactor period is less than 10 seconds, as specified by TS 3.2.1.4.

TS 3.2.1 Control Blades

Specification: According to Table 3.2.1-1.

Table 3.2.1-1
Control Blade Limitations

	LIMITING CONDITION OR FUNCTION	ALLOWABLE CONDITION OR VALUE	SURVEILLANCE REQUIREMENTS
(…)			
3.	Control blade withdrawal	Neutron count rate ≥ 2 counts/second	SR 3.2.1.4
4.	Control blade withdrawal	Reactor Period > 10 seconds	SR 3.2.1.5

SURVEILLANCE REQUIREMENTS

	SURVEILLANCE	FREQUENCY
(…)		
SR 3.2.1.4	Verify proper inhibit function when neutron count rate is less than 2 counts/second	Daily
SR 3.2.1.5	Verify proper inhibit function	Daily

TS 3.2.1.3 and SR 3.2.1.4 ensures the operability of the inhibit function by requiring a count rate to be seen by the nuclear instrumentation channels. The NRC staff finds that TS 3.2.1.3 and SR 3.2.1.4 helps ensure that there are sufficient source neutrons available for a visible indication on the instrumentation to help ensure operation of the instruments and to allow the operator to bring the reactor critical under controlled conditions.

TS 3.2.1.4 and SR 3.2.1.5 ensures operability of the inhibit that prevents withdrawal of any control rod if the reactor period is less than 10 seconds. The NRC staff finds that TS 3.2.1.4 and SR 3.2.1.5 help ensure that the reactor operator has control of the reactor.

TS 3.2.1.1 and TS 3.2.1.2 and the associated SRs, SR 3.2.1.1, SR 3.2.1.2, and SR 3.2.1.3 are discussed and found acceptable in Section 2.2.2 of this SER.

The NRC staff reviewed TS 3.2.1.3 and TS 3.2.1.4 and the associated SRs (SR 3.2.1.4 and SR 3.2.1.5). The NRC staff finds the inhibit functions in TS 3.2.1.3 and TS 3.2.1.4 are consistent with the guidance in NUREG-1537, “Guidance for Preparing and Reviewing Applications for the Licensing of Non-Power Reactors,” issued February 1996 (Ref. 51) and ANSI/ANS-15.1-2007, “The Development of Technical Specifications for Research Reactors”

(Ref. 55). These inhibits provide a diverse method to help ensure that the UFTR will be operated safely. Based on the information above, the NRC staff concludes that TS 3.2.1.3 and TS 3.2.1.4 and the associated SRs (SR 3.2.1.4 and SR 3.2.1.5) that verify operability of the inhibit functions, are acceptable.

As described in SAR Section 7.2.2.1, the following are the main components of Nuclear Instrumentation Channel 1:

1. Log Power (Wide-Range Channel). The log power channel provides the operator with a continuous display of neutron flux from source level to full power. The circuit consists of a B-10 proportional counter (for low levels), a fission chamber, a preamplifier, a log amplifier, and the log (second or green pen) channel of the two-pen recorder.

2. Period Channel. The log-n amplifier produces a voltage proportional to the logarithm of the neutron flux. A derivative circuit produces a voltage proportional to the inverse of the reactor period, which is then amplified and displayed on a control panel meter that ranges from –30 seconds to +3 seconds. An adjustable bistable activates a full scram (see TS 3.2.2 discussed in Section 4.4 of this SER).

3. Safety Channel 1. This linear channel is applied as a safety channel by using the direct current component of the signal from the wide-range fission chamber. The output signal is displayed as the power level on a linear scale ranging from 1 percent to 150 percent of rated power. The channel generates self-test signals to allow operators to check the function of the channel. As previously stated, a bistable activates a full scram, which provides defense-in-depth, but is not a TS required trip (refer to the "Proposed TS changes" discussed later in this section of the SER).

<u>Nuclear Instrumentation Channel 2</u>. This channel monitors the neutron level or power level of the UFTR and maintains a steady reactor power level via the steady-state automatic control system. As described in SAR Section 7.2.2.2, the following are the main components of Nuclear Instrumentation Channel 2:

1. Linear Power Channel. The linear power channel provides the operator with a continuous display of power level from just above source level to 100 kWt. The linear power circuit consists of a neutron-sensitive compensated ion chamber, a picoammeter with a 17-position range switch, and a reactor power as a percentage of the selected range switch (first or red pen) channel of the two-pen recorder. The picoammeter sends a signal, which is a function of the linear indication of reactor power, to the servo-amplifier, where it is compared with the signal from the servo flux control, as part of the automatic reactor control circuit.

2. Safety Channel 2. This linear power channel receives its signal from an uncompensated ion chamber. The channel consists of the ion chamber, an operational amplifier, an adjustable bistable trip, and a display meter ranging from 1 percent to 150 percent of rated power. A bistable set at the TS LSSS setpoint of 110-percent rated power (110 kWt) activates a full scram (see TS 3.2.2 discussed in Section 4.4 of this SER). The channel also generates self-test signals to allow operators to check the function of the channel. Safety Channel 2 also initiates a full scram whenever the high voltage applied to the detector chambers drops below 90 percent of the full voltage. The low detector high-voltage scram is not a TS

required reactor trip (refer to the “Proposed TS changes” discussed later in this section of the SER). However, the trip provides defense-in-depth for the system.

Non-Nuclear Instrumentation Channels. The UFTR is supplied with several process instrumentation channels to monitor the operation of various systems, maintain steady-state power level, and trip the system before an LSSS is reached or if an instrument fails. Other channels provide information needed to operate the reactor safely but do not have protective functions. As described in SAR Section 7.2.3, the following are non-nuclear process instrumentation channels:

1. Control Blade Drive System. The control blade drive circuits contain three backlit push button switches for each of the four control blades (“DOWN” (white backlight), “UP” (red backlight), and “ON” (yellow backlight, indicating that the magnetic clutch is energized and engaged with the control blade drive)), control blade drive motors, and digital position-indicating devices. The reactor operator uses the control blade push buttons and position indication, located on the reactor console, to manipulate the reactor control blades and to monitor their status.

2. Control Blade Withdrawal Inhibit System. The control blade withdrawal inhibit system is part of the RPS. It functions to prevent blade withdrawal under the following conditions: (1) insufficient neutron source counts (minimum of 2 cps required by TS), (2) reactor period of 10 seconds or less, (3) Safety Channels 1 and 2 and wide-range drawer Calibrate (or Safety 1 Trip Test) switches not in “OPERATE” or “OFF” position, (4) attempt to move two or more blades simultaneously when the reactor is in manual mode, or (5) power is raised in the automatic control mode at a period less than 30 seconds. Except for the low counts and fast period inhibits, the remainder of the UFTR inhibits are not required by the TS (refer to the “Proposed TS changes” discussed later in this section of the SER). However, these inhibits provide defense-in-depth for the system.

3. Automatic Control System. The automatic control system is used to hold the reactor power at a steady power level during extended reactor operation at power. It may be used to make minor power adjustments within the maximum range of the switch settings. When the automatic mode of reactor control is selected, the manual mode of operation is disabled. The reactor control switch must be placed back in the “MANUAL” mode before the regulating control blade will respond to its “UP” or “DOWN” control switches.

4. Primary Coolant System Process Monitoring and Control:

    a. Low Flow/Loss of Flow. A primary coolant flow monitor, sensing flow in the primary fill line, indicates flow at the control console and trips the reactor if flow is below the setpoint of 41 gallons per minute (gpm) (see TS 3.2.2 discussed in Section 4.4 of this SER). Another flow switch, located in the primary coolant return line to the primary coolant storage tank, will trip the reactor upon loss of return flow; the return flow switch serves as a backup to the primary fill line low-flow reactor trip. A sight glass in the reactor cell provides local indication of the core primary coolant water level. A level switch behind the sight glass is an RPS instrument that will prevent reactor operation or initiate a reactor trip when the coolant water level in the core falls below preset limits (see TS 3.2.2 discussed in Section 4.4 of this SER).

b. High Primary Coolant Average Temperature. Thermocouples monitor the reactor coolant bulk inlet temperature and the discharge temperature of the coolant water returning from each of the six fuel boxes back to the primary coolant storage tank. The digital temperature monitoring and control system displays temperature information on a monitor and backup recorder in the control room. Reactor Coolant Bulk Inlet Temperature provides a high temperature trip if inlet temperature exceeds 102 Fahrenheit (°F). Reactor Coolant Bulk Outlet Temperature provides a high temperature trip if bulk outlet temperature exceeds 102 °F. Reactor Coolant Fuel Box Outlet Temperature provides temperature indication for fuel box outlet temperature on any of the four monitored temperature points.

c. Low Primary Coolant Resistivity. A resistivity meter in the control room provides continuous monitoring of primary coolant resistivity to ensure functioning of the primary coolant purification demineralizer system.

5. Secondary Coolant System Process Monitoring and Control. A deep well, nominally rated at 200 gpm, is the source of cooling water to remove reactor heat. When operating the reactor above 1 percent (1 kWt) power, a reduction of secondary coolant well-water flow to 140 gpm or less will illuminate a yellow low-secondary-flow warning light on the control console. A further reduction of flow to 60 gpm or less will illuminate a red low-secondary-coolant-flow warning light on the control console and a red warning light on the secondary-coolant-low scram annunciator light. After a delay of approximately 10 seconds, a reactor trip will be initiated as a result of low secondary coolant well-water flow.

6. Shield Tank System. The shield tank system has a local flow indicator in the purification loop to verify proper functioning of the purification system. A level switch continuously monitors the water level in the reactor shield tank and will initiate a reactor trip if the water level drops below the setpoint (6 inches below established normal level).

Proposed TS changes

As part of license renewal, the licensee proposed several changes to the current TSs. The licensee states that the scram and interlock functions described in the current TSs include all such items installed in the facility at the time of construction; they were made into LSSS items by default in the TSs and were brought forward into the current TSs in the same manner. In addition to the above information from the SAR, the licensee provided additional rationale in the response to request for additional information (RAI) 2.g (Ref. 24) in support of proposed TS changes for the UFTR.

The licensee has requested that TS 2.2 be changed to reduce the number of LSSS and to renumber the three TSs proposed to be retained.

The current TS 2.2 states:

Specifications: The limiting safety system settings shall be

(1) Power level at any flow rate shall not exceed 119 kW.

(2) The primary coolant flow rate shall be
(a) greater than 36 gpm at all power levels greater than 1 watt if the fuel coolant channel spacing tolerance is ≤ 15 mils.
(b) greater than 41 gpm at all power levels greater than 1 watt ii the fuel coolant channel spacing tolerance is ≤ 20 mils.

(3) The average primary coolant
(a) inlet temperature shall not exceed 109° F when the fuel coolant channel spacing tolerance is ≤ 10 mils.
(b) inlet temperature shall not exceed 99° F when the fuel coolant channel spacing tolerance is ≤ 20 mils.
(c) outlet temperature shall not exceed 155° F when measured at any fuel box outlet.

(4) The reactor period shall not be faster than 3 sec.

(5) The high voltage applied to Safety Channels 1 and 2 neutron chambers shall be 90% or more of the established normal value.

(6) The primary coolant pump shall be energized during reactor operations.

(7) The primary coolant flow rate shall be monitored at the return line.

(8) The primary coolant core level shall be at least 2 in. above the fuel.

(9) The secondary coolant flow shall satisfy the following conditions when the reactor is being operated at power levels equal to or larger than 1 kW:

(a) Power shall be provided to the well pump and the well water flow rate shall be larger than 60 gpm when using the well system for secondary cooling.

or

(b) The water flow rate shall be larger than 8 gpm when using the city water system for secondary cooling.

(10) The reactor shall be shut down when the main alternating current (ac) power is not operating.

(11) The reactor vent system shall be operating during reactor operations.

(12) The water level in the shield tank shall not be reduced 6 in. below the established normal level.

The proposed TS 2.2 states:

TS 2.2 Limiting Safety System Settings

Table 2.2-1
Limiting Safety System Settings

	FUNCTION	ALLOWABLE VALUE
1.	High Reactor Power Trip	≤ 110% RTP
2.	Low Reactor Coolant Flow Trip	≥ 41 gpm
3.	High Reactor Coolant Bulk Inlet Temperature Trip	≤ 102°F

The proposed TS 2.2.1, TS 2.2.2, and TS 2.2.3 were evaluated and found acceptable in Section 2.7 of this SER. The following discussion pertains to the approved LSSSs that the licensee either proposes be changed to LCOs or proposes to delete them from the UFTR TS.

The licensee's proposed reactor trips are stated in TS 3.2.2, which are listed, reviewed, and found acceptable in Section 4.4 of this SER.

In the license renewal application, the licensee proposes to reduce the number of LSSSs from the number in the current TSs. The licensee proposes to use a reduced set of 3 LSSSs down from 12 in the current TS. In reviewing the current TS, the NRC staff finds that some of the current UFTR LSSSs do not meet the definition for a LSSS in Title 10 of the *Code of Federal Regulations* (10 CFR) 50.36, "Technical specifications," or the guidance in NUREG-1537, Part 1, Appendix 14.1. Therefore, the NRC staff agrees with the licensee's proposal that many of the LSSS in the current TSs do not need to be listed as LSSSs in the proposed TSs. The licensee proposes some of these TS are better suited as LCOs and proposes others for deletion from the TS.

For the TS proposed for deletion, the licensee states that the safety analysis demonstrates that these LSSS entries are not required to safely operate the UFTR, even as LCOs, since they are not credited in the transient and accident analyses. Unless stated otherwise, all references to the licensee's justification for modifying or removing these LSSSs is provided in the licensee's response to RAI 2.g (Ref. 24). The licensee's supporting statements for modifying or deleting these TSs and the NRC staff's evaluation of each follows.

Current LSSS TS 2.2(1) (proposed as LSSS TS 2.2.1 and LCO TS 3.2.2.1) for reactor power has been lowered from 119 kWt to 110 kWt. This reactor power LSSS was conservatively chosen by the licensee to ensure normal operation remains bounded by the thermal hydraulic analysis (i.e., to keep onset of nucleate boiling ratio (ONBR) greater than one), as evaluated in Section 2.7 of this SER. The NRC staff finds that the licensee's proposed reduction of the high power trip setpoint adds additional safety margin to the operation of the UFTR. The NRC staff concludes the reduction of the setpoint is conservative and therefore, acceptable.

The licensee proposes that the current LSSS TS 2.2(2)(a) and TS 2.2(2)(b) be reduced to a single LSSS (proposed as LSSS TS 2.2.2 and LCO TS 3.2.2.2) for primary flow that incorporates the limiting channel spacing tolerance of 20 mils. This flow LSSS was conservatively chosen to ensure normal operation remains bounded by the thermal hydraulic analysis (i.e., to keep

ONBR greater than one), as evaluated in Section 2.7 of this SER. The current TSs has two settings that are based on possible variance occurring in manufacturing the low enriched uranium (LEU) fuel for the UFTR, when it was being converted from high-enriched uranium (HEU) fuel to LEU fuel (Ref. 6). After the LEU fuel was manufactured, the 20 mils spacing was confirmed. The NRC staff finds that the licensee's proposal to base the flow on the actual spacing in the LEU fuel to be acceptable. The actual LSSS setpoint of greater than or equal to 41 gpm remains unchanged for the channel spacing tolerance of 20 mils and was evaluated and found acceptable in Section 2.7 of this SER.

The licensee proposes that the current LSSS TS 2.2(3)(a) and TS 2.2.(3)(b) be reduced to a single LSSS (proposed as LSSS TS 2.2.3 and LCO TS 3.2.2.3) for average primary inlet temperature that incorporates the limiting channel spacing tolerance of 20 mils, which currently is "inlet temperature shall not exceed 99 °F when the fuel coolant channel spacing tolerance is ≤ 20 mils." The current TS has two setting that are based on possible variance occurring in manufacturing the LEU fuel for the UFTR, when it was being converted from HEU fuel to LEU fuel (Ref. 6). After the LEU fuel was manufactured, the 20 mils spacing was confirmed. The NRC staff finds that the licensee's proposal to base the average inlet temperature on the actual spacing in the LEU fuel to be acceptable. The licensee also proposes to increase the High Average Reactor Coolant Inlet Temperature LSSS to less than or equal to 102 °F and the High Reactor Coolant Bulk Inlet Temperature setpoint to less than or equal to 102 °F. The licensee states that this temperature was conservatively chosen to ensure normal operation remains bounded by the thermal hydraulic analysis (i.e., to keep ONBR greater than one), as evaluated in Section 2.7 of this SER.

Current LSSS TS 2.2(3)(c) states average primary coolant outlet temperature shall not exceed 155 °F when measured at any fuel box outlet. As a replacement, the licensee proposes LCO TS 3.2.2.4, High Reactor Coolant Bulk Outlet Temperature, with a setpoint of 120 °F or less. The name change from average primary coolant outlet temperature to reactor coolant bulk outlet temperature is a change in nomenclature only. The same sensor and sensor location are still being used. The licensee's reduction in the bulk outlet setpoint is more representative of the maximum inlet temperature plus actual delta temperature across the core. The NRC staff finds that the licensee's proposed reduction of the high temperature trip setpoint adds additional safety margin to the operation of the UFTR. The NRC staff finds the reduction of the setpoint to be conservative and therefore acceptable. The licensee proposed, and the NRC staff accepts, the three LSSSs in the proposed TS based on the thermal hydraulic analysis (i.e., to keep ONBR greater than one), as previously evaluated in Section 2.7 of this SER. Therefore, the NRC staff concludes that changing the current LSSS TS 2.2(3)(c) to LCO TS 3.2.2.4 is acceptable.

The licensee states that current LSSS 2.2(4), related to reactor period, is not required for protection of the SL. However, the licensee proposes a fast period trip be conservatively required in TS 3.2.2.5 to ensure early termination of a reactivity insertion event originating from low power levels. The licensee's analysis of reactivity transients in SAR Chapter 13, states that the SL will not be violated for large reactivity additions, even without a protective system trip, and that in all cases the reactor transients are terminated by the feedback mechanisms, i.e. fuel temperature and void coefficients of reactivity, inherent to the UFTR design. The NRC staff reviewed the licensee's analysis and also performed independent calculations of similar reactivity insertions. The NRC staff finds that while the SL is not exceeded, the NRC staff notes that a large reactivity addition with and without a protective action, will challenge the integrity of the UFTR by causing the rupture disc to break, draining the primary coolant, as discussed in Section 6.2.2 of this SER (the rupture disc is described in SER Section 3.2). The NRC staff

considers breakage of the rupture disc to be an abnormal event that should not be considered normal operation. However, the NRC staff calculations of a 74 pcm/s ramp from 0.01 Wt up to a total of 1,480 pcm indicates the fast period scram will help to prevent breaking the rupture disc. The NRC staff accepts the three LSSSs in the licensee's proposed TS based on the thermal hydraulic analysis (i.e., to keep ONBR greater than one) as previously evaluated in Section 2.7 of this SER. Therefore, based on all of the above information, the NRC staff concludes the period trip is needed to help ensure early termination of reactivity insertion events, but that changing the current LSSS TS 2.2(4) to LCO TS 3.2.2.5 is acceptable.

The licensee proposes current LSSS 2.2(5) be removed from the UFTR TS since the reactivity insertion analyses demonstrate that automatic protective actions for loss of detector high voltage are not a requirement for protection of the SL. The Low Detector Voltage trip function, which initiates a reactor trip when the actual detector high voltage falls below 90 percent of nominal, will be retained, as described in SAR Section 7.1.3. From the discussion in Section 4.2.3 of this SER, the Nuclear Instrumentation Channels 1 and 2 will both independently provide a reactor trip for low detector voltage. The NRC staff notes that proper high voltage to the nuclear instruments is required for nuclear instrument operability and accuracy. This trip will help to ensure that the measured signals from the channels are accurate and that severe undervoltage does not lead to inappropriate actions by the Automatic Control System. However, the NRC staff finds that nuclear instrument operability is already acceptably ensured by the LCOs and SRs relevant to the reactor power channels (see Section 4.4 of this SER). The NRC staff finds that this is an alternate, but acceptable implementation of the guidance in NUREG-1537, Part 1, Appendix 14.1. Therefore, the NRC staff concludes that it is acceptable to remove detector high voltage as a TS required LCO.

The licensee states that current LSSSs 2.2(6) and 2.2(7) are effectively redundant to current LSSS 2.2(2) (proposed as LSSS TS 2.2.2 and LCO TS 3.2.2.2) for primary flow and are proposed for removal since they are not required for protection of the SL. The current LSSSs 2.2(6) requires that the reactor coolant pump be energized and current LSSS 2.2(7) requires that primary coolant flow be monitored at the return line. The regulations in 10 CFR 50.36(c)(1)(ii)(A) states "where a limiting safety system setting is specified for a variable on which a safety limit has been placed, the setting must be so chosen that automatic protective action will correct the abnormal situation before a safety limit is exceeded." The NRC staff finds that neither requiring power to the reactor coolant pump or requiring flow monitoring at a specific location are setpoints that will correct an abnormal situation. As such, the NRC staff finds that LSSS 2.2(6) and LSSS 2.2(7) are not appropriate as LSSS. The regulation in 10 CFR 50.36(c)(2) defines an LCO as conditions for operation that are the lowest functional capability or performance levels of equipment required for safe operation of the facility. Current TS 2.2(6) and TS 2.2(7) do meet the definition for an LCO, however, the NRC staff has reviewed the information provided by the licensee, as supplemented, and finds that these TSs are redundant to proposed LCO TS 3.2.2.2. Accordingly, the NRC staff finds it acceptable to delete these TSs.

The licensee states that current LSSS 2.2(8), related to coolant level, is not required for protection of the SL. However, the licensee proposes that a low coolant level trip is conservatively required as specified in LCO TS 3.2.2.6, as described in SAR Section 7.1.3.2.1 and Section 7.3.1. The licensee also states that this TS provides redundancy to LCO TS 3.2.2.2. The NRC staff finds that TS 3.2.2.6 provides defense-in-depth for LSSS TS 2.2.3. The NRC staff accepts the three LSSSs proposed in the TSs based on the thermal hydraulic analysis (i.e., to keep ONBR greater than one), as previously evaluated in Section 2.7 of this

SER. Therefore, the NRC staff concludes that changing the current LSSS TS 2.2(8) to LCO TS 3.2.2.6 is acceptable.

The licensee states that current LSSS 2.2(9) for secondary coolant flow is effectively redundant to current LSSS 2.2(3) (proposed as LSSS TS 2.2.3 and LCO TS 3.2.2.3). The licensee's proposal is based on the reactivity insertion analyses in SAR Chapter 13 demonstrating that automatic protective actions related to secondary flow are not required for protection of the SL. The licensee has also proposed that secondary coolant flow be eliminated as a TS, but retained as a pre-set limit, as described in SAR Section 7.1.3.2.2. Additionally, the licensee describes the diverse monitoring via thermocouples that sense the temperature of the bulk secondary water going to and exiting from the heat exchanger and whose readout is sent to a digital paperless recorder. The NRC staff evaluated the above information and finds that secondary flow is ancillary to reactor coolant temperature control, but monitoring secondary flow is not needed as an LSSS to protect the fuel temperature SL. This especially true since secondary temperature is not a required LSSS. The NRC staff has reviewed the information provided by the licensee, as supplemented, and finds that establishing a limit on secondary flow is important to monitor system operation, but is redundant as an LCO to proposed TS 3.2.2.3 and TS 3.2.2.4. The NRC staff also notes that there are several redundant means of monitoring primary coolant temperature. Accordingly, the NRC staff finds it acceptable to delete current LSSS TS 2.2(9).

The licensee proposes deleting current LSSS 2.2(10) from the UFTR TSs since automatic protective actions related to alternating current (ac) power are not required for protection of the SL. The licensee states that a loss of ac power will result in a reactor shutdown due to gravity insertion of the control blades and gravity dumping of the water moderator. As previously discussed for current LSSSs 2.2(6) and 2.2(7), current LSSS 2.2(10) does not meet the intent of the 10 CFR 50.36 requirements for an LSSS. Similarly, current LSSS 2.2(10) does not meet the intent of the regulation in 10 CFR 50.36(c)(2) as an LCO since the condition to shutdown the reactor when main ac is not available is not representative of the lowest functional capability or performance level of equipment required for safe operation of the facility. The NRC staff reviewed the information provided by the licensee, as supplemented, and finds that the inherent fail-safe design of the UFTR control and protective system (reviewed and found acceptable in Section 2.2.2 of this SER) will result in an automatic scram from a loss of main ac power and prevent further reactor operations in Mode 1 or Mode 2. A loss of electrical power is reviewed and found acceptable in Section 6.7 of this SER. Based on a review of this information, the NRC staff finds it acceptable to delete current LSSS TS 2.2(10).

The licensee proposes converting current LSSS 2.2(11) into proposed LCO TS 3.5. The licensee states that an LSSS for the reactor vent system to be operating during reactor operations is not needed since the reactivity insertion analyses demonstrates that automatic protective actions related to the reactor vent system are not required for protection of the SL. Proposed LCO TS 3.5 is reviewed and found acceptable in Section 5.1.1 of this SER. Reactor vent system operability and operation, when it is required, is ensured by LCO TS 3.5 and SR 3.5.1 and SR 3.5.2 relevant to the core vent and stack dilution systems. Based on the preceding information, the NRC staff concludes that deleting the current LSSS TS 2.2(11) and replacing it with LCO TS 3.5 is acceptable.

The current LSSS 2.2(12) states that shield tank level shall not be reduced six inches below the established normal levels. The licensee states that the reactivity insertion analyses demonstrate that automatic protective actions related to the shield tank level are not required for protection of the SL. Instead, the licensee proposes that proper shield tank level be ensured by LCO TS 3.9.1

for shield tank level. In addition to finding that shield tank level does not meet the definition of an LSSS, the NRC staff notes that, in addition to whatever utilitarian function the shield tank may have, from a safety perspective, the principal design objective of the shield tank level LCO is to protect personnel and reduce radiation exposures to reactor components and other equipment. From that perspective, TS 3.9.1 is reviewed and found acceptable in Section 2.4 of this SER. On that basis, the NRC staff concludes it is acceptable to replace LSSS 2.2(12) with LCO TS 3.9.1.

The NRC staff's review of the licensee's statements finds that a number of the functions that are currently LSSSs do not in fact meet the definition of an LSSS and should be LCOs as proposed by the licensee. In addition, the NRC staff finds that a number of the current protective functions are not required to support the safety analysis of the UFTR and, as detailed above, the NRC staff accepts the explanations provided by the licensee. The NRC staff finds that the LSSSs identified in TS 2.2 and the scram functions identified in TS 3.2.2 are sufficient to safely operate the UFTR. The proposed LSSSs are evaluated in Section 2.7 of this SER where the NRC staff finds these represent acceptable LSSSs for UFTR.

Consequently, the NRC staff concludes that the licensee's analysis of the design and operating principle of the RPS for the UFTR and the protection channels and protective responses are sufficient to ensure that the SL, LSSSs, or RPS-related LCOs discussed and analyzed in the SAR will be exceeded as long as UFTR is operated in accordance with the TSs.

4.2.4 System Performance Analysis

The NRC staff review includes the operational history as considered in the IRs (Refs. 47 and 48) and the licensee annual reports (Refs. 28, 29, 30, 31, and 33). These reports indicate no degradation of I&C system performance since the previous approval granted in license Amendment No. 26 (Ref. 4). The NRC staff finds that the operational history of UFTR I&C systems has been satisfactory and concludes that continued use of these systems can be safely accomplished under the TSs.

4.3 Reactor Control System

SAR Figure 7-2 provides the functional diagram for the reactor control system. Reactivity control of the UFTR is provided by four control blades consisting of three safety blades and one regulating blade. Blade insertion time is controlled by TSs. The control blades are discussed in more detail in Section 2.2.2 of this SER.

According to SAR Section 7.2.1, the control blade drive circuits contain three backlit push button switches for each of the four control blades: a white backlit "DOWN" push button switch, a red backlit "UP" push button switch, and a yellow backlit "ON" push button switch. When the white or red switches are backlit, the associated control blade drive motor power circuit is blocked from drive action. When a yellow backlit "ON" push button switch is illuminated, it indicates that the magnetic clutch is energized and engaged with its associated control blade drive. When any "ON" push button switch is depressed, the yellow backlight remains extinguished as long as the button is depressed. If the control blade is above its down limit, the magnetic clutch current is interrupted, disengaging the control blade from its drive motor, and the control blade will be inserted by gravity into the reactor core. The control blades are a fail-safe design: upon loss of power, current is interrupted to the magnetic clutches, disengaging the associated control blades from their drives, and all of the control blades are inserted by gravity into the reactor core.

The control blade withdrawal inhibit system, taking inputs from the RPS, blocks control blade withdrawal under certain conditions:

- Insufficient neutron source counts (minimum of 2 cps required by TS 3.2.1.3);

- Reactor period of 10 seconds or less (required by TS 3.2.1.4);

- Safety Channels 1 and 2 and wide-range drawer calibration switches not in the "OPERATE" position or Safety 1 Trip Test and Period Trip switch not in "OFF." When these switches are not in the correct position for reactor operation (OPERATE or OFF) then the blade withdrawn inhibit is in effect;

- Attempt to move any two or more blades simultaneously when the reactor is in manual mode, or two or more safety blades simultaneously when the reactor is in automatic mode; or

- Power raised in the automatic control mode at a period of 30 seconds or less.

The automatic control system is used to hold the reactor power at a steady power level or for minor power adjustments within the maximum range of the switch settings during extended reactor power operation. When the automatic mode of reactor control is selected, the manual mode of operation is disabled. The reactor control switch must be placed back in the "MANUAL" mode before the regulating control blade will respond to it's "UP" or "DOWN" control switches. The automatic neutron flux controller compares the linear power signal from the Pico ammeter in Nuclear Instrumentation Channel 2 (linear power signal from the compensated ion chamber) with the power demand signal and moves the regulating blade to minimize the difference, thereby maintaining a steady power level.

On the basis of the information provided in the SAR, the NRC staff concludes that:

- The licensee has analyzed the normal operating characteristics of the reactor facility, including thermal steady-state power levels and the planned reactor uses. The licensee has also analyzed the functions of the RCS and components designed to permit and support normal reactor operations, and confirms that the RCS and its subsystems and components will give all necessary information to the operator or to automatic devices to maintain planned control for the full range of normal reactor operations.

- The components and devices of the RCS are designed to sense the parameters necessary for facility operation with acceptable accuracy and reliability, to transmit the information with high accuracy in a timely fashion, and control devices are designed for compatibility with the analyzed dynamic characteristics of the reactor.

- The licensee has ensured sufficient interlocks, redundancy, and diversity of subsystems to avoid loss of operating information and control, to limit hazards to personnel, and to ensure compatibility among operating subsystems and components in the event of single isolated malfunctions of equipment.

- The RCS is designed so that any single malfunction in its components, either analog or digital, would not prevent the RPS from performing the necessary functions, or would not prevent the safe shutdown of the reactor.

- Discussions of testing, checking, and calibration provisions, and the bases of TSs including surveillance tests and intervals give reasonable confidence that the RCS will function as designed.

4.4 Reactor Protection System

SAR Section 7.3.1 describes various attributes of the RPS. The RPS channels and components are discussed in Section 4.2.3 of this SER. SAR Figure 7-3 provides the RPS functional diagram.

The response to RAI 6.a (Ref. 24) documents the two types of reactor trips applicable to UFTR:

- Full-trip, which involves the insertion of the control blades into the core, the opening of the dump valve, and the dumping of the primary water into the storage tank; and

- Blade-trip, which involves only the insertion of the control blades into the reactor core (without dumping of the primary water).

The following conditions will initiate a full-trip when two or more control blades are not at their bottom position*;

- Short period (3 seconds or less);
- High power (110 percent);
- Reduction of high voltage to the neutron chambers of 10 percent or more;
- Turning off the console magnet power switch; or
- ac power failure.

* The feature requiring two or more control blades is necessary to allow the licensee to perform the test for the blade trip function separate from the dump valve open function provided by a full trip. The NRC staff finds the reactor cannot become critical with two control blades fully withdrawn if the TS 3.1.2 limit on excess reactivity is met.

The following conditions will initiate a blade-trip:

- Loss of power to stack dilution fan;
- Loss of power to core went fan/damper;
- Loss of power to the deep well pump when operating at or above 1 kWt and using deep well for secondary cooling;
- Secondary flow below 60 gpm when operating at or above 1 kW using the well water system for secondary cooling (10 seconds delay);

- Secondary flow below 8 gpm when operating at or above 1 kW using city water for secondary cooling (no delay after initial 10 second time interval);
- Shield tank water level 6 inches below established normal level;
- Loss of power to primary coolant pump;
- Primary coolant flow below 41 gpm (inlet flowrate);
- Loss of primary coolant flow (no return flow);
- Primary coolant level below 42.5 inches (≥ 2 inches above the fuel);
- Any primary coolant return temperature above 120 °F;
- Primary coolant inlet temperature above 102 °F;
- Initiation of the evacuation alarm; or
- Manual reactor trip button depressed.

In the response to RAI 3.h.iii (Ref. 24), the licensee states that the water dump is not credited or considered in mitigating any accident. Thus, unless otherwise stated in this SER, a reference to trip or scram will in all cases mean a blade trip or a blade scram and not a full trip or full scram.

TS 3.2.2 establishes the requirement for UFTR to employ five automatic and one manual trip functions. These functions help to ensure that UFTR operates within the bounds established by the analyses documented in the SAR and they are discussed individually. TS 3.2.2 specifies the trip functions that must be operable in the Mode 1 and Mode 2.

TS 3.2.2 Reactor Trips

Specification: According to Table 3.2.2-1.

Table 3.2.2-1
Specifications for Reactor System Trips

	FUNCTION	SURVEILLANCE REQUIREMENTS	ALLOWABLE CONDITION OR VALUE
1.	High Reactor Power	SR 3.2.2.1	≤ 110% RTP
2.	Low Reactor Coolant Flow	SR 3.2.2.2	≥ 41 gpm
3.	High Reactor Coolant Bulk Inlet Temperature	SR 3.2.2.1	≤ 102°F
4.	High Reactor Coolant Bulk Outlet Temperature	SR 3.2.2.1	≤ 120°F
5.	Fast Reactor Period	SR 3.2.2.1	≥ 3 seconds
6.	Low Reactor Coolant Level	SR 3.2.2.2	≥ 2 inches above the fuel
7.	Manual	SR 3.2.2.1	OPERABLE

ACTION

	CONDITION	REQUIRED ACTION		COMPLETION TIME
A.	One required trip inoperable.	A.1	Restore operability	15 minutes

SURVEILLANCE REQUIREMENTS

	SURVEILLANCE	FREQUENCY
SR 3.2.2.1	Perform a CHANNEL CHECK	Daily
SR 3.2.2.2	Perform a CHANNEL TEST	Quarterly

TS 3.2.2.1 is the High Reactor Power trip. This function implements an LSSS setpoint that requires that the reactor trip when the calibrated reactor power reaches 110 percent of rated thermal power (110 kWt). From the discussion in Section 4.2.3 of this SER, this means that either the Safety Channel 1 wide-range fission chamber or the Safety Channel 2 uncompensated ion chamber are capable of independently providing this trip signal. The NRC staff finds that TS 3.2.2.1 helps ensure reactor operation remains bounded by the thermal hydraulic analysis described in SAR Section 4.6 and that this is an acceptable implementation of the guidance in NUREG-1537, Part 1, Appendix 14.1, and is consistent with the departure from nucleate boiling ratio (DNBR) analysis discussed in Section 2.7 of this SER. Therefore, the NRC staff concludes that TS 3.2.2.1 acceptably implements the LSSS function for High Reactor Power trip.

TS 3.2.2.2 is the Low Reactor Coolant Flow trip. This function implements an LSSS setpoint that requires that the reactor trip when the calibrated primary coolant flow is less than 41 gpm. From the discussion in Section 4.2.3 of this SER, the primary coolant flow monitor will provide a reactor trip. The NRC staff finds that TS 3.2.2.2 helps ensure reactor operation remains bounded by the thermal hydraulic analysis described in SAR Section 4.6 and that this is an acceptable implementation of the guidance in NUREG-1537, Part 1, Appendix 14.1, and is consistent with the DNBR analysis discussed in Section 2.7 of this SER. Therefore, the NRC staff concludes that TS 3.2.2.2 acceptably implements the LSSS function for Low Reactor Coolant Flow.

TS 3.2.2.3 is the High Reactor Coolant Bulk Inlet Temperature trip. This function implements an LSSS setpoint that requires that the reactor trip when the calibrated primary coolant inlet temperature is greater than 102 °F. From the discussion in SAR Section 4.2.3, the digital temperature monitoring and control system will provide a reactor trip. The NRC staff finds that TS 3.2.2.3 helps ensure reactor operation remains bounded by the thermal hydraulic analysis described in SAR Section 4.6 and that this is an acceptable implementation of the guidance in NUREG-1537, Part 1, Appendix 14.1, is consistent with the DNBR analysis discussed in Section 2.7 of this SER. Therefore, the NRC staff concludes that TS 3.2.2.3 acceptably implements the LSSS function for High Reactor Coolant Bulk Inlet Temperature.

TS 3.2.2.4 is the High Reactor Coolant Bulk Outlet Temperature trip. This function implements an LCO setpoint that requires that the reactor trip when the calibrated primary coolant bulk outlet temperature is greater than 120 °F. The NRC staff finds that LCO TS 3.2.2.4 provides redundancy to the LSSSs in TSs 3.2.2.1, 3.2.2.2, and 3.3.3.3 to help ensure reactor operation remains bounded by the thermal hydraulic analysis described in SAR Section 4.6 and this is an acceptable implementation of the guidance in NUREG-1537, Part 1, Appendix 14.1. Based on this information, the NRC staff concludes that TS 3.2.2.4 is acceptable.

TS 3.2.2.5 is the Fast Reactor Period trip. This function requires that the reactor trip when the actual period is less than 3 seconds. From the discussion in Section 4.2.3 of this SER, the Nuclear Instrumentation Channel 1 will provide this reactor trip. This trip helps to reduce the likelihood of reactor overpower events or power increases that are faster than can be effectively controlled by the operator when the reactor is in manual control. The NRC staff finds that this is an acceptable implementation of the guidance in NUREG-1537, Part 1, Appendix 14.1. Therefore, the NRC staff concludes that TS 3.2.2.5 is acceptable.

TS 3.2.2.6 is the Low Reactor Coolant Level Trip. This function implements an LCO setpoint that requires that the reactor trip when the calibrated primary coolant level is less than 2 inches above the fuel. This helps ensure that the fuel boxes are full of water and the fuel is also covered. The NRC staff finds that LCO TS 3.2.2.6 provides redundancy to LSSS TS 3.2.2.2 by inhibiting blade withdrawal until the minimum core water level is reached. The NRC staff also finds that this is an acceptable implementation of the guidance in NUREG-1537, Part 1, Appendix 14.1. Therefore, the NRC staff concludes that TS 3.2.2.6 is acceptable

TS 3.2.2.7 is the Manual trip. The manual function provides the operator with the means for initiating a reactor trip independent of the automatic trips. The Manual trip allows the operator to quickly shut down the reactor if an unsafe or abnormal situation occurs providing a level of protection that is in addition to, and independent of, automated systems. The NRC staff concludes that this is an acceptable implementation of the guidance in NUREG-1537, Part 1, Appendix 14.1.

On the basis of this information, the NRC staff concludes that TS 3.2.2.1 through TS 3.2.2.7 are acceptable.

The action statement for TS 3.2.2 allows 15 minutes, while in Mode 1 or Mode 2, to resolve an issue if one of the required trips in TS 3.2.2 is inoperable. If more than one required trip is inoperable, or the 15 minutes elapses without correcting the problem, the reactor must be placed in a Mode other than Mode 1 or Mode 2 (i.e., shutdown) in accordance with TS 3.0.1. The NRC staff finds that the action and corresponding completion time and the restriction to no more than one inoperable channel is reasonable and appropriate. Additionally, 15 minutes is a reasonable amount of time to restore an instrument to operation without unnecessarily disrupting continued reactor operations. Based on this information, the NRC staff concludes the action statement for TS 3.2.2 is acceptable.

SR 3.2.2.1 and SR 3.2.2.2 require surveillances to help ensure operability of the reactor system trips. There is a daily channel check and quarterly channel test of the reactor system trips. These SRs use a frequency that is consistent with the guidance in NUREG-1537 and acceptably ensure that the conditions established in the specifications are maintained. Based on its review, the NRC staff concludes that SR 3.2.2.1 and SR 3.2.2.2 are acceptable.

On the basis of the information provided, the NRC staff concludes that:

- The licensee has analyzed the design and operating principle of the RPS for the UFTR;
- The protection channels and protective responses are sufficient to ensure that no SL, LSSS, or RPS-related LCO discussed and analyzed in the SAR will be exceeded;

- The RPS design is sufficient and provides for all isolation and independence from other reactor subsystems required by SAR analyses to avoid malfunctions or failures caused by the other systems;

- The RPS is designed to maintain function or to achieve safe reactor shutdown in the event of a single random malfunction within the system; and

- The RPS is designed to prevent or mitigate hazards to the reactor so that the full range of nominal operations poses no undue radiological risk to the health and safety of the public, the UFTR staff, or the environment.

4.5 Engineered Safety Features Actuation Systems

As stated in SAR Chapter 6, UFTR has no engineered safety features. The licensee states that the UFTR is a self-limiting research and training reactor which requires no additional engineered safeguards beyond those designed into the reactor core or incorporated into the main cooling, safety, control, and radiation monitoring systems. The licensee also states that the accident analyses performed, as described in Chapter 13 of the SAR, show that there is no credible accident that would result in radiological exposures hazardous to the public, the UFTR staff, or the environment and that an engineered safety features is not required for UFTR operations at 100 kWt. The NRC staff reviewed the information provided in the SAR and finds that the assumptions used in the safety analyses in Chapter 13 are generally acceptable, and concludes the engineered safety features are not required to mitigate the potential radiological consequences for UFTR accidents.

4.6 Control Console and Display Instruments

The reactor console provides controls for the reactor systems and indication of key reactor operating parameters. The UFTR reactor control panel contains the following controls and indication instrumentation:

- A console power switch;
- A three-position key switch;
- A set of control-blade switches;
- One set of switches for controlling the secondary system city water valve;
- Four control blade position digital indicators;
- A manual scram bar;
- A set of scram and blade interlock annunciator lights;
- Power Channel #1 meters and calibrate/test controls;
- Power Channel #1 period meter and calibrate/test controls;
- Power Channel #2 meter and test controls;
- Power Channel #2 linear range switch;
- Power Channel #2 recorder;
- A mode selector switch for automatic or manual operation;

- A percent-demand control potentiometer;
- Reactor cell door monitors;
- Reactor equipment control switches and annunciator lights;
- Digital clock;
- Plutonium-beryllium source alarm indicator; and
- Rabbit system solenoid switch.

SAR Figure 7-1 shows the overall layout of the reactor console, radiation monitoring panel, and the auxiliary alarm panel. The control console and instrument panel are located within the reactor control room, which is a centralized operating station located within the reactor building. The NRC staff compared the general arrangement and types of controls and displays provided by the UFTR control console to those at similar research reactors and finds that they are similar.

According to SAR Sections 7.3 and 7.5, annunciator lights and an audible alarm at the control console indicate all scrams and three interlock conditions. Whenever the reactor console key-switch is turned to the “ON” position, a red rotating beacon will operate in the reactor cell, and “REACTOR ON” warning signs are illuminated at various key locations and access points through the reactor building.

On the basis of this information, the NRC staff concludes that the annunciator and alarm indications on the control console give assurance that the status of systems important to adequate and safe operation will be presented to the reactor operator. The NRC staff compared the general arrangement and types of controls and displays for the UFTR control console to those at similar research reactors and finds that the designs are similar. The NRC staff observed the control console during a site visit and finds that the control console provides the reactor operator with the types of information and controls necessary to facilitate reliable and safe operation of the reactor.

TS 3.2.3 establishes the compliment of measuring channels required for operation of the UFTR in Mode 1 and Mode 2. This specification helps to ensure that the operator has sufficient information to operate the reactor.

TS 3.2.3 Reactor Measuring Channels

Specification: According to Table 3.2.3-1.

Table 3.2.3-1
Minimum Required Measuring Channels

	CHANNEL	APPLICABILITY	SURVEILLANCE REQUIREMENTS	NUMBER OPERABLE
1.	Reactor Power	MODES 1 and 2	SR 3.2.3.1 and SR 3.2.3.3	2
2.	Reactor Period	MODES 1 and 2	SR 3.2.3.1 and SR 3.2.3.3	1
3.	Control Blade Position	MODES 1 and 2	SR 3.2.3.1 and SR 3.2.3.2	4
4.	Reactor Coolant Flow	MODES 1 and 2	SR 3.2.3.1 and SR 3.2.3.3	1
5.	Reactor Coolant Bulk Inlet Temperature	MODES 1 and 2	SR 3.2.3.1 and SR 3.2.3.3	1
6.	Reactor Coolant Bulk Outlet Temperature	MODES 1 and 2	SR 3.2.3.1 and SR 3.2.3.3	1
7.	Reactor Coolant Fuel Box Outlet Temperature	MODE 1	SR 3.2.3.1 and SR 3.2.3.3	4

ACTION

	CONDITION		REQUIRED ACTION	COMPLETION TIME
A.	One required channel inoperable	A.1	Restore operability	15 minutes

SURVEILLANCE REQUIREMENTS

	SURVEILLANCE	FREQUENCY
SR 3.2.3.1	Perform a CHANNEL CHECK	Daily
SR 3.2.3.2	Perform a CHANNEL TEST	Weekly
SR 3.2.3.3	Perform a CHANNEL CALIBRATION	Annual

TS 3.2.3.1 is the Reactor Power channel. Operation in Mode 1 or Mode 2 requires that two channels be operable to support this function. As described in Section 4.2.3 of this SER, information to support the reactor power monitoring function is provided by the Nuclear Instrumentation Channels 1 and 2. The NRC staff concludes that this is an acceptable implementation of the guidance in NUREG-1537, Part 1, Appendix 14.1.

TS 3.2.3.2 is the Reactor Period channel. Operation in Mode 1 or Mode 2 requires that one channel be operable to support this function. The NRC staff concludes that this is an acceptable implementation of the guidance in NUREG-1537, Part 1, Appendix 14.1.

TS 3.2.3.3 is the Control Blade Position channel. Operation in Mode 1 or Mode 2 requires that four channels be operable to support this function. The NRC staff concludes that this is consistent with TS 3.2.1.1 that requires operability of all four control blades (in terms of maximum scram times) for Mode 1 and Mode 2 consistent with the guidance in ANSI/ANS-15.1-2007 and meets the acceptance criteria in NUREG-1537, Part 2, Section 7.6.

TS 3.2.3.4 is the Reactor Coolant Flow channel. Operation in Mode 1 or Mode 2 requires that one channel be operable to support this function. As described in Section 4.2.3 of this SER, information to support the reactor coolant flow monitoring function is provided by the Primary Coolant System Process Monitoring and Control system. The NRC staff concludes that this is an acceptable implementation of the guidance in NUREG-1537, Part 1, Appendix 14.1.

TS 3.2.3.5 is the Reactor Coolant Bulk Inlet Temperature channel. Operation in Mode 1 or Mode 2 requires that one channel be operable to support this function. As described in Section 4.2.3 of this SER, information to support the reactor coolant bulk inlet temperature monitoring function is provided by the Primary Coolant System Process Monitoring and Control system. The NRC staff concludes that this is an acceptable implementation of the guidance in NUREG-1537, Part 1, Appendix 14.1.

TS 3.2.3.6 is the Reactor Coolant Bulk Outlet Temperature channel. Operation in Mode 1 or Mode 2 requires that one channel be operable to support this function. As described in Section 4.2.3 of this SER, information to support reactor coolant bulk outlet temperature monitoring function is provided by the Primary Coolant System Process Monitoring and Control system. The NRC staff concludes that this is an acceptable implementation of the guidance in NUREG-1537, Part 1, Appendix 14.1.

TS 3.2.3.7 is the Reactor Coolant Fuel Box Outlet Temperature channel. Operation in Mode 1 requires that four channels be operable to support this function. This sensor is only required for Mode 1 because this is the only time that a delta temperature is expected across the reactor fuel, when power is sufficient to generate heat (point of adding heat). As described in Section 4.2.3 of this SER, information to support reactor coolant fuel box outlet temperature monitoring function is provided by the Primary Coolant System Process Monitoring and Control system. The NRC staff concludes that this is an acceptable implementation of the guidance in NUREG-1537, Part 1, Appendix 14.

The action statement for TS 3.2.3 provides guidance to the operator in the event one channel required by TS 3.2.3 is inoperable. By the action statement, the operator has 15 minutes to restore the required channel to operability. By TS 3.0.1.3, when this LCO is not met and the associated action is not met, the reactor must be placed in a Mode or other condition in which the LCO is not applicable, per TS Table 3.2.3-1. Additionally, if multiple unrelated LCOs are not being met, TS 3.0.1.5 requires that when in Mode 1 or Mode 2, shutdown of the reactor should never be delayed. The NRC staff finds that the action statement and corresponding completion time and the restriction to no more than one inoperable channel is reasonable and appropriate. Additionally, 15 minutes is a reasonable amount of time to restore an instrument to operation without unnecessarily disrupting continued reactor operations. Based on this information, the NRC staff concludes the action statement for TS 3.2.3 is acceptable.

On the basis of this information, the NRC staff concludes that TS 3.2.3.1 through TS 3.2.7, and the associated action statements, are acceptable.

SR 3.2.3.1, SR 3.2.3.2, and SR 3.2.3.3 require surveillances to help ensure operability of the reactor measuring channels. There is a daily channel test, a weekly channel check, and an annual calibration of the reactor measuring channels. These SRs use frequencies and intervals for performing required surveillances that are consistent with the guidance in NUREG-1537 and acceptably ensure that the conditions established in the specifications are maintained. Based on its review, the NRC staff concludes that SR 3.2.3.1, SR 3.2.3.2, and SR 3.2.3.3 are acceptable.

On the basis of the information provided the NRC staff concludes that:

- The licensee has shown that all nuclear and process parameters important to safe and effective operation of the UFTR are displayed at the control console. The display devices for these parameters are readily observable by an operator positioned at the reactor controls. The control console design and operator interface are sufficient to promote safe reactor operation;

- The output instruments and the controls in the control console have been designed to provide for checking operability, inserting test signals, performing calibrations, and verifying trip settings;

- The annunciator and alarm panels on the control console give assurance of the operability of systems important to adequate and safe reactor operation; and

- The locking system on the control console reasonably ensures that the reactor facility will not be operated by unauthorized personnel.

4.7 Radiation Monitoring Systems

According to SAR Section 7.6, the reactor vent system effluent monitor consists of a GM detector and preamplifier, which transmits a signal to the control room to indicate the gamma activity of the effluent downstream of the absolute filter before dilution occurs. The stack monitoring system also consists of a log rate meter circuit and indicator, a recorder, and an auxiliary log rate meter with an adjustable alarm setting capability.

The area radiation monitoring system provides indication of radiation levels for personnel in the reactor building. The system consists of three independent area monitors that have remote detector assemblies, interconnecting cables, analog strip-chart recorders, and count rate meters. Each detector has an energy-compensated GM counter with built-in check source that can be operated from the control room Radiation Monitoring Panel. The signals from these detectors are transmitted directly to the log count rate meter and recorder. Two levels of alarm are provided: an orange warning light and a red audible alarm. Both alarm levels latch in to preclude false indication if a high dose rate saturates the detector. Detection of high radiation levels at any two of the area monitors automatically initiates the building evacuation alarm, which in turn automatically trips the reactor cell air handler system, the diluting fan, and the reactor core vent fan. The loss of power to the vent fan or the diluting fan will initiate a process instrumentation-induced safety trip of the reactor.

The stack monitor and three area monitor modules in the control room are equipped with test switches and green "NO FAIL" lights that go out if the modules do not receive signal pulses from the detectors. Battery packs supply power to the units in the event of electrical power loss.

Air from the reactor cell is pulled through the airborne radioactivity monitor which is equipped with a recorder and an audible and visible alarm setting.

TS 3.7.1 Radiation Monitoring Systems

Specification: According to Table 3.7.1-1.

Table 3.7.1-1
Minimum Radiation System Requirements

	RADIATION MONITOR TYPE	ALARM SETPOINT	SURVEILLANCE REQUIREMENTS	NUMBER REQUIRED OPERABLE
1.	Area Radiation Monitor	≤ 25 mr/hr or equivalent	SR 3.7.1.1, SR 3.7.1.2, and SR 3.7.1.3	3
2.	Air Particulate Detector	≤ Five times background	SR 3.7.1.1, SR 3.7.1.2, and SR 3.7.1.3	1
3.	Stack Radiation Monitor	≤ Twice normal	SR 3.7.1.1, SR 3.7.1.2, and SR 3.7.1.3	1

ACTIONS

	CONDITION	REQUIRED ACTIONS		COMPLETION TIME
A.	One required radiation monitor inoperable.	A.1	Substitute portable instrument, survey, or analysis	60 minutes
			AND	
		A.2	Restore required radiation monitor operability	7 days

SURVEILLANCE REQUIREMENTS

	SURVEILLANCE	FREQUENCY
SR 3.7.1.1	Perform a CHANNEL CHECK	Daily
SR 3.7.1.2	Perform a CHANNEL TEST	Weekly
SR 3.7.1.3	Perform a CHANNEL CALIBRATION	Semiannual

TS 3.7.1 establishes the compliment of radiation monitoring channels required for operation of the UFTR. TS 3.7.1 helps to ensure that the operator has sufficient information to monitor the reactor facilities for ionizing radiation. This specification consists of three monitoring types and they are discussed individually.

Type 1 is the Area Radiation Monitor. Operation in Mode 1 or Mode 2, core alterations, irradiated fuel movement, irradiated fueled experiment movement, movement of experiments with significant potential for airborne releases, and during movement of concrete block shielding over the top of the core in Mode 5 all require that three channels be operable. All available channels are used to satisfy this requirement. The NRC staff finds that this is an acceptable implementation of the guidance in NUREG-1537, Appendix 14.1.

Type 2 is the Air Particulate Monitor. Operation in Mode 1 or Mode 2, core alterations, irradiated fuel movement, irradiated fueled experiment movement, movement of experiments with significant potential for airborne releases, and during movement of concrete block shielding over the top of the core in Mode 5 all require that the channel be operable. This is the only available channel used to satisfy this requirement. The NRC staff finds that this is an acceptable implementation of the guidance in NUREG-1537, Appendix 14.1.

Type 3 is the Stack Radiation Monitor. Operation in Mode 1 or Mode 2, core alterations, irradiated fuel movement, irradiated fueled experiment movement, movement of experiments with significant potential for airborne releases, and during movement of concrete block shielding over the top of the core in Mode 5 all require that the channel be operable to support this function. This is the only available channel used to satisfy this requirement. The NRC staff finds that this is an acceptable implementation of the guidance in NUREG-1537, Appendix 14.1.

On the basis of this information, the NRC staff concludes that TS 3.7.1.1, TS 3.7.1.2, and TS 3.7.1.3 for the three types of radiation monitoring systems are acceptable.

The action statement for TS 3.7 allows for one required radiation monitor to be inoperable. By the action statement, the operator has 60 minutes to either restore the required monitor to operation or institute comparative monitoring using a portable survey instrument. If the instrument remains out of service and portable instrument, survey, or analysis has been instituted, operations are allowed to continue for up to 7 days while the required radiation monitor is returned to operability. Because there are three area radiation monitors, having one inoperable for up to an hour is acceptable because the other two monitors remain in operation. The Air Particulate Detector and Stack Radiation Monitor perform similar functions of detecting radiation in the reactor cell air. Because of this one of these monitors can be out of service for up to an hour. By TS 3.0.1.3, when this LCO is not met and the associated Action is not met, the reactor must be placed in a Mode or other condition in which the LCO is not applicable. This means the reactor cannot be in Mode 1 or Mode 2 (i.e., the reactor must be shutdown); and core alterations, irradiated fuel movement, irradiated fueled experiment movement, movement of experiments with significant potential for airborne releases, or movement of concrete block shielding over the top of the core in Mode 5 are not permissible The NRC staff finds that the action provides an alternate monitoring method should a radiation monitor become inoperable and corresponding completion time and the restriction to no more than one inoperable channel is reasonable and appropriate. Additionally, 60 minutes is a reasonable amount of time to restore an instrument to operation without disrupting continued reactor operations. Based on this information, the NRC staff concludes the action statement for TS 3.2.3 is acceptable.

On the basis of this information, the NRC staff concludes that TS 3.2.3.1 through TS 3.2.7 and the associated action statement are acceptable.

SR 3.7.1.1 establishes the requirement to verify the operability of the cited channels daily by performing a channel check. This helps to ensure the operability of the radiation monitors so that ionizing radiation can be detected and reported. The NRC staff concludes that this is an acceptable implementation of the guidance in ANSI/ANS-15.1-2007 and NUREG-1537, Appendix 14.1.

SR 3.7.1.2 establishes the requirement to verify the operability of the cited channels weekly by performing a channel test. This helps to ensure the operability of the radiation monitors so that

ionizing radiation can be detected and reported. The NRC staff concludes that this is an acceptable implementation of the guidance in ANSI/ANS-15.1-2007 and NUREG-1537, Appendix 14.1.

SR 3.7.1.3 establishes the requirement to calibrate the cited channels semiannually. This helps to ensure the accuracy of the ionizing radiation detection and reporting. The NRC staff concludes that this is an acceptable implementation of the guidance in ANSI/ANS-15.1-2007 and NUREG-1537, Appendix 14.1.

On the basis of this information, the NRC staff finds that SR 3.7.1.1, SR 3.7.1.2, and SR 3.7.1.3 are acceptable.

On the basis of the information provided, the NRC staff concludes that:

- The designs and operating principles of the instrumentation and control of the radiation detectors and monitors have been described, and have been shown to be applicable to the anticipated sources of radiation at UFTR;

- The SAR discusses all likely radiation and radioactive sources anticipated at the UFTR and describes equipment, systems, and devices that will give reasonable assurance that all such sources will be identified and accurately evaluated (see Chapter 5 of this SER); and

- The radiation monitoring systems described in the SAR provide reasonable assurance that dose rates and effluents at the facility will be acceptably detected, and that the health and safety of the facility staff, the environment, and the public will be acceptably protected.

4.8 Conclusions

On the basis of the information provided, the NRC staff concludes that:

- The I&C systems include the important ranges of power measurements by nuclear instrumentation as ensured by the overlapping ranges of the instrumentation channels.

- All of the important nuclear process variables are displayed and monitored at the reactor console.

- The components and devices of the RCS are designed to sense all parameters necessary for UFTR operation with acceptable accuracy and reliability, to transmit the information with high accuracy in a timely fashion, and control devices are designed for compatibility with the analyzed dynamic characteristics of the reactor.

- The RPS is designed to prevent or mitigate hazards to the reactor and detect and prevent the release of radiation. The protection channels and protective responses are sufficient to ensure that the SL or LSSSs specified in the TSs will not be exceeded, and that the full range of reactor operation poses no undue radiological risk to the health and safety of the public, the UFTR staff, or the environment.

- The designs and operating principles of the I&C systems for the radiation detectors and monitors have been described and have been shown to be applicable to the anticipated sources of radiation.

- The radiation monitoring systems described in the SAR give reasonable assurance that dose rates and effluents at the facility will be acceptably detected and that the health and safety of the UFTR staff, the environment, and the public will be acceptably protected.

5. RADIATION PROTECTION AND RADIOACTIVE WASTE MANAGEMENT

5.1 Radiation Protection

Activities involving radiation at the University of Florida Training Reactor (UFTR) are controlled under a radiation protection program that must meet the requirements of Title 10 of the *Code of Federal Regulations* (10 CFR) 20.1101, "Radiation protection programs." The regulations in 10 CFR 20.1101 state, in part, that each licensee shall develop, document, and implement a radiation protection program and shall use, to the extent practical, procedures and engineering controls based on sound radiation protection principles to achieve occupational doses and doses to members of the public that are as low as reasonably achievable (ALARA). In accordance with 10 CFR 20.1101(c), the licensee shall periodically (at least annually) review the radiation protection program content and implementation to ensure continued compliance with the requirements of 10 CFR Part 20, "Standards for Protection against Radiation."

The U.S. Nuclear Regulatory Commission (NRC) inspection program routinely reviews radiation protection and radioactive waste management at the UFTR facility. The licensee's historical performance in these areas, as documented in NRC inspection reports (IRs) and the annual operating reports of the UFTR facility, in the safety analysis report (SAR), as supplemented, and as observed by the NRC staff during site visits, provide documentation that measures are in place to minimize radiation exposure to UFTR staff and the public and to provide adequate protection against operational releases of radioactivity to the environment.

5.1.1 Radiation Sources

The NRC staff reviewed the descriptions of potential radiation sources in each physical form (airborne, liquid, or solid) presented in the SAR, as supplemented, including the inventories and location of the sources. The review of radiation sources included identification of potential radiation hazards and verification that the hazards were accurately depicted and comprehensively identified.

Airborne Radiation Sources

As discussed in SAR Section 9.1.2, the UFTR has a core vent system that ensures reactor cell pressure is maintained slightly negative as compared to atmospheric pressure, and minimizes accumulation of radioactive gases into the reactor cell by drawing air from the cell, through the reactor structure, and out the exhaust stack.

TS 3.5 relates to the reactor cell ventilation system, and is applicable during reactor operation (Mode 1 and Mode 2) and certain operations with the potential to cause airborne releases, such as core alterations and movement of certain experiments. TS 3.5 defines the minimum operability requirement for the reactor cell ventilation systems as follows:

TS 3.5 Reactor Cell Ventilation Systems

Specification:

1. The core vent and stack dilution systems shall be OPERATING.

2. REACTOR CELL pressure shall be negative with respect to the surrounding environment.

ACTIONS

	CONDITION	REQUIRED ACTIONS		COMPLETION TIME
A.	Core vent or stack dilution systems not OPERATING. OR REACTOR CELL pressure not within specification	A.1	Place or verify affected system(s) in operation AND	15 minutes
		A.2	Verify REACTOR CELL pressure within specification AND	15 minutes
		A.3	Suspend CORE ALTERATIONS, irradiated fuel movement, irradiated fueled EXPERIMENT movement, movement of experiments with significant potential for airborne releases, and movement of concrete block shielding over the top of the core in MODE 5	15 minutes

SURVEILLANCE REQUIREMENTS

	SURVEILLANCE	FREQUENCY
SR 3.5.1	Verify core vent and stack dilution systems are OPERATING	Daily
SR 3.5.2	Verify REACTOR CELL pressure is negative with respect to the surrounding environment	Quarterly

The licensee states that TS 3.5 applies to Mode 1 and Mode 2, and during core alterations, irradiated fuel movement, irradiated fueled experiment movement, movement of experiments with significant potential for airborne releases, and during movement of concrete block shielding over the top of the core in Mode 5.

TS 3.5 and the associated Surveillance Requirement (SR) 3.5.1 and SR 3.5.2 establish the requirement that the reactor cell ventilation systems be operating, and maintaining the reactor cell pressure negative with respect to the surrounding environment, whenever the reactor is operating (Mode 1 and Mode 2), or during core alterations, or movement of irradiated fuel or irradiated fueled experiment, or movement of experiments with significant potential for airborne releases, and during movement of concrete block shielding over the top of the core in Mode 5 is being performed.

TS 3.5.1 establishes the requirement to have an operating ventilation system during operations with potential to produce gaseous effluents via the controlled air pathway of the core vent. Operation of the stack dilution system ensures that gaseous effluents originating from the reactor cell are diluted prior to release. TS 3.5.2 helps ensure that exhaust air flow is only from the reactor building via the ventilation system. TS 5.1.3, discussed and found acceptable in Section 7.4 of this safety evaluation report (SER), ensures that release from the exhaust vent is a minimum of 25 feet (ft) above the ground, which helps ensure dispersion and dilution of effluents released from the vent before they reach the ground. The NRC staff finds that TS 3.5.1 and TS 3.5.2, help ensure the UFTR ventilation system is operating with a controlled air pathway release point.

The action statement associated with TS 3.5 allows for 15 minutes to determine and correct operation of the core vent and stack dilution system if it is discovered the minimum operability requirements of TS 3.5 are not met. Additionally, any core alterations, irradiated fuel movement, irradiated fueled experiment movement, movement of experiments with significant potential for airborne releases, and movement of concrete block shielding over the top of the core in Mode 5 must be terminated within 15 minutes if the reactor cell ventilation systems will not be returned to operation within that time frame. This is to allow an evolution in progress to be completed and placed in a safe configuration. It is not intended that evolutions that have not started would be performed. The NRC staff reviewed these action statements and finds that 15 minutes is a reasonable amount of time to allow for correction of a ventilation system anomaly before disrupting reactor operations. Additionally, the NRC staff finds that the 15 minutes to cease the operations for core alterations, irradiated fuel movement, irradiated fueled experiment movement, movement of experiments with significant potential for airborne releases, and movement of concrete block shielding over the top of the core in Mode 5 allows for a safe and orderly completion of the evolution and is reasonable.

By requiring the core vent and stack dilution systems to be operating, TS 3.5 helps to ensure that argon (Ar)-41 produced by routine operation of the reactor, or any radioactive materials released from the reactor during potential accidents, is directed out of the UFTR stack, and diluted and dispersed, thus reducing exposures to UFTR staff and members of the public. By requiring that the ventilation system maintain reactor cell pressure negative with respect to the surrounding environment, TS 3.5 also helps ensure that any radioactive material that may be released to the reactor cell will not leak directly to the environment. SR 3.5.1 requires daily verification that the reactor cell ventilation systems are operating and SR 3.5.2 requires quarterly verification that the reactor cell pressure is negative with respect to the surrounding environment. In response to request for additional information (RAI) 3.I.i, the licensee stated that the pressure measurements are taken with hand-held instrumentation (Ref. 24).

The NRC staff reviewed TS 3.5 and the ventilation system design as presented in the SAR, as supplemented, and finds that these design aspects are acceptable and are consistent with the guidance in NUREG-1537, “Guidance for Preparing and Reviewing Applications for the Licensing of Non-Power Reactors,” issued February 1996 (Ref. 51) and ANSI/ANS-15.1-2007, “The Development of Technical Specifications for Research Reactors” (Ref. 55). The NRC staff finds that the requirements specified within TS 3.5 are consistent with the analyses and dose calculation assumptions described in the SAR, as supplemented. The NRC staff also finds that TS 3.5, including its associated SRs and the performance frequencies for those SRs, is consistent with the guidance in NUREG-1537 and ANSI/ANS-15.1-2007. Therefore, based on the information above, the NRC staff concludes that TS 3.5 and the associated SRs and action statements are acceptable.

The occupational and public exposure from nitrogen (N)-16 is negligible because of the core vent and exhaust system, and because of the 7-second half-life of N-16. The core vent system minimizes the N-16 released to the reactor cell, and most N-16 decays before it can exit the stack into the environment. Therefore, during normal operations of the UFTR, the only appreciable airborne source of radiation exposure is from Ar-41, primarily resulting from the neutron activation of Ar-40 in air that is around the graphite reflector blocks of the reactor. Similarly to N-16, the core vent system helps ensure that only minimal Ar-41 is released into the reactor cell, and therefore occupational doses from Ar-41 in the reactor cell are minimal. Therefore, in SAR Section 11.1.1.1.1, the licensee stated that the only routine occupational exposure from Ar-41 occurs during performance of stack effluent surveillance measurements involving manual grab samples of stack effluent. This surveillance is performed twice a year, as required by TS 3.7.2 (discussed below). Any surveillance-related exposures are kept ALARA and well below the 5,000 mrem occupational dose limit in 10 CFR 20.1301, "Dose limits for individual members of the public." The periodic (bi-annual) surveillance measurements of the stack effluent are performed to determine instantaneous Ar-41 concentration by taking air samples from the stack while the reactor is operating at 100 percent power (100 kilowatt thermal (kWt)). This measurement is then used to estimate the Ar-41 production during reactor operation. To ensure compliance with the 10 mrem annual total effective dose equivalent (TEDE) constraint for members of the public of 10 CFR 20.1101(d), the licensee limits the annual Ar-41 production by administratively limiting (see TS 3.7.2, which is discussed below) effective full-power hours of operation (EFPHs). Based on the instantaneous concentration and stack release point parameters, a monthly EFPH limit is calculated to ensure compliance with the annual public dose constraint of 10 CFR 20.1101(d). Prior to any reactor operation, the cumulative EFPHs for the month are compared to this limit to prevent exceeding the monthly limit.

The UFTR conversion to use low enriched uranium (LEU) fuel was approved by the NRC in 2006, and the licensee began operation with LEU fuel in early 2015. In a recent measurement of Ar-41 production taken following the conversion, the reactor was estimated to produce 4,430.93 microcuries per kilowatt hour (µCi/kWh) of operation, as indicated by the 2014-2015 Annual Report (Ref. 28). Based on a total stack exhaust air flow rate of 13,628 cubic feet per minute (cfm) (6.4319 cubic meters per second (m^3/s)) (calculated as the sum of the core vent flow rate and the stack dilution flow rate, measured as reported in SAR Section 11.1.1.1.2), the Ar-41 concentration at the stack exit during operation will be about 1.914×10^{-7} microcuries per milliliter (µCi/ml) per kW of power. This corresponds to a concentration of 1.914×10^{-5} µCi/ml for full-power (100 kWt) operation.

In SAR Section 11.1.1.1.2, the licensee discussed its method for estimating the public dose from its Ar-41 stack releases, and provided an estimate of the maximum annual public dose from Ar-41. For the purposes of its calculation, the licensee assumed that the reactor is operated at full power for the entire year, and produces Ar-41 at a rate of 1.351×10^{-4} Ci per second, or 4,260.5 Ci per year. Based on the 6.4319 m^3/s exhaust air flow rate, this corresponds to an Ar-41 concentration of 2.100×10^{-5} µCi/ml at the stack exit during operation. The NRC staff finds that the Ar-41 concentration of 2.100×10^{-5} µCi/ml used for the licensee's analysis is larger (more conservative) than the 1.914×10^{-5} µCi/ml concentration determined from the information in the 2014-2015 Annual Report (Ref. 28). For its analysis, the licensee credited the elevated nature of the release. Using the average wind speed based on the wind rose for the Gainesville Regional Airport, the stack diameter, and the stack effluent exit velocity, the licensee used the Davidson equation to calculate an effective release height of 14.9 meters (m) (48.9 ft), which accounts for both the approximately 9.1 m (29.9 ft) actual stack

height, as well the upward momentum of the effluent air as it leaves the stack. For the licensee's COMPLY calculation, which is discussed in the next paragraph, a slightly lower (more conservative) effective release height of 14 m (45.9 ft) was used. The licensee calculated the location of the maximally-exposed member of the public using the standard Gaussian plume dispersion equations, the Pasquill atmospheric stability classes, and the Briggs lateral and vertical dispersion coefficients. The licensee assumed a neutral (Pasquill D) atmospheric stability class for determining the location of the maximally-exposed member of the public, consistent with Regulatory Guide (RG) 4.20 guidance (Ref. 76), and also consistent with average meteorological condition assumptions used in the COMPLY atmospheric dispersion modelling computer code (Ref. 85). The licensee calculated that the maximally-exposed member of the public would be approximately 202 m (663 ft) from the UFTR stack.

Using the information above, as well as the wind rose data for the Gainesville Regional Airport, the licensee used the COMPLY code to estimate the maximum expected public Ar-41 TEDE. To support their analysis, the licensee provided a COMPLY output (Ref. 8). The licensee calculated the maximum annual dose, which would occur approximately 202 m (663 ft) from the stack, to be 19.5 mrem. The licensee stated that although this dose exceeds the 10 CFR 20.1101(d) TEDE constraint of 10 mrem per year, it remains below the 100 mrem per year public dose limit of 10 CFR 20.1301.

The NRC staff reviewed the licensee's analysis. The NRC staff noted that, in calculating the effective stack height, the licensee uses a wind speed of 2.81 meters per second (m/s) (9.22 feet per second (ft/s)), which is an average wind speed for approximately 22.6 percent of the time when weather conditions are calm (i.e., no wind). Based on the wind rose at Gainesville Regional Airport, the wind blows most often from the east to the west or from the west to the east (approximately 7.5 percent of the time for each direction); therefore, receptors who are downwind when the wind blows in those directions (i.e., receptors who are due east or due west of the stack) are likely to receive the highest Ar-41 doses. When the wind blows from east to west or from west to east, the corresponding average wind speeds are 3.60 m/s (11.8 ft/s) and 4.07 m/s (13.4 ft/s), respectively. Since the effective stack height decreases with increasing wind speed, the licensee's use of the 2.81 m/s (9.22 ft/s) wind speed to calculate an effective stack height used to estimate the dose to the maximally-exposed member of the public may have resulted in an overestimation of the effective stack height, and, consequently, and underestimation of the dose. Therefore, in its confirmatory analysis of public doses from Ar-41, which is discussed below, the NRC staff considered receptors located due east and due west of the stack, and used average wind speeds for periods when the wind blows from east to west or west to east, as appropriate, for calculating effective stack heights. Using the Davidson equation, NRC staff calculated that wind speeds of 3.60 m/s (11.8 ft/s) and 4.07 m/s (13.4 ft/s) correspond to effective stack heights of approximately 13.2 m (43.3 ft) and 12.6 m (41.3 ft), respectively.

The NRC staff also noted that, because the methodology used by the COMPLY code differs from the standard Gaussian plume dispersion equation methodology that the licensee used to calculate the location of the maximally-exposed member of the public, the maximum dose location assumed by the licensee may not be the same as the maximum dose location for COMPLY calculations. Therefore, in its confirmatory analysis of public doses from Ar-41, the NRC staff also performed dose calculations for various distances from the stack to ensure that the confirmatory calculation represented the dose to an individual at the maximum-dose location.

The NRC staff performed an independent confirmatory calculation of the maximum public dose from Ar-41. The NRC staff analysis used the Pasquill-Gifford method and conservatively neglected building wake effects and plume meander. Similarly to the licensee's analysis, the NRC staff's analysis assumed that a neutral (Pasquill D) atmospheric stability class occurs the entire year. As discussed above, the NRC staff considered receptors located due east and due west from the stack, since these are the directions in which the wind most frequently blows, and used corresponding average wind speeds from the Gainesville Regional Airport wind rose for the calculations for each direction. The NRC staff used dose conversion factors (DCFs) from Federal Guidance Report (FGR) No. 12 (Ref. 75) for its calculations. The NRC staff calculated that the maximum public dose from Ar-41 is 19.4 mrem, received by a receptor located approximately 170 m (558 ft) west of the stack (i.e., a receptor who is exposed to Ar-41 when the wind blows from east to west). This is comparable to the 19.5 mrem calculated by the licensee. Although the NRC staff calculation uses a more conservative effective stack height value than the licensee, other differences in the models and assumptions used for the NRC staff and licensee calculations account for the slightly lower value calculated by the NRC staff.

The NRC staff Pasquill-Gifford confirmatory calculation, discussed above, uses dispersion coefficients for open country conditions. However, the NRC staff considered that the UFTR is located in an area with many other buildings nearby, and therefore, a different set of coefficients based on urban conditions (see "Handbook on Atmospheric Dispersion" or "HotSpot User's Guide" (Refs. 77 and 78)) may be more appropriate. Using the neutral (Pasquill D) atmospheric stability and the coefficients for urban conditions, the NRC staff calculated a maximum annual public Ar-41 dose of 25.2 mrem, received by a receptor located approximately 68 m (223 ft) west of the stack. Although this dose is greater than the NRC staff and licensee doses calculated based on open country conditions, it is still well below the 100 mrem per year public dose limit of 10 CFR 20.1301. Additionally, this dose, and the other NRC staff and licensee doses discussed above, are all based on an assumption that an individual will be standing at the corresponding maximum dose locations for a full year (in reality, the individual would only need to stand at the location the times that the wind is blowing in the direction of the individual to receive the dose). Although the 170 m (557 ft) and 202 m (662 ft) locations on the University of Florida campus that are discussed above are near a residence hall, and could potentially be occupied continuously for an entire year, the location 68 m (223 ft) west of the stack is not continually occupied, and consequently 25.2 mrem is an overestimate of the dose at that location.

The nearest residence to the UFTR facility is a residence hall located approximately 183 m (600 ft) due west of the reactor building. The NRC staff and licensee calculations did not include a calculation of the annual Ar-41 dose at the specific location of the nearest residence to the facility. However, the NRC staff and licensee calculations (which assumed full-time occupancy) estimated that the maximum dose would be 19.4 mrem 170 m (557 ft) west of the stack, and 19.5 mrem 202 m (662 ft) west of the stack, respectively. Given that these maximum dose locations are very near the location of the nearest residence, the NRC staff finds that the calculated maximum doses are representative of the annual dose to an individual located at the nearest residence for an entire year. (As noted above, the licensee's calculated doses used dispersion coefficients for open country conditions; using dispersion coefficients for urban conditions, the NRC staff calculated that the annual Ar-41 dose at the nearest residence is approximately 8.5 mrem.)

The NRC staff also noted during site visits that the top of the UFTR stack is only about 2 m (6.6 ft) above the roof of the reactor building, and the top of the stack is also similar in height to other buildings adjacent to the reactor building. Consequently, the NRC staff noted

that during certain weather conditions, particularly high wind conditions, Ar-41 releases from the UFTR stack could potentially behave more similarly to a ground release, rather than an elevated release, due to downwash of the Ar-41 plume exiting the stack. The NRC staff considered the potential dose to members of the public in locations near the reactor building during periods of elevated Ar-41 concentration at ground level in these locations. Using an average wind speed of 4.07 m/s (13.4 ft/s), the UFTR stack exit velocity of 10.9 m/s (35.9 ft/s), and the entrapment coefficient methodology in NRC RG 1.111, "Methods for Estimating Atmospheric Transport and Dispersion of Gaseous Effluents in Routine Releases from Light-Water-Cooled Reactors" (Ref. 84), the NRC staff conservatively estimated that these conditions could occur at a maximum of about 14 percent of the time. The NRC staff assumed that the wind blows in any one direction a maximum of about 7.5 percent of the time, consistent with the calculations above. The NRC staff also used a generic dispersion factor (X/Q value) for locations near the release point during a ground release that is one-half the conservative value used for the accident analysis in NUREG/CR-2079, "Analysis of Credible Accidents for Argonaut Reactors" (Ref. 72) (this is conservative because bounding dispersion factors used for accident analyses are typically based on low wind speeds, while greater wind speeds, resulting in more dispersion and significantly lower dispersion factors, would typically occur during the downwash periods). Assuming a 25 percent occupancy factor for locations near the release point, the NRC staff estimated an annual dose of 17.7 mrem for members of the public from exposure to Ar-41 during the downwash periods. This is below the NRC staff- and licensee-calculated doses (19.4 mrem and 19.5 mrem, respectively) for conditions during which the Ar-41 releases are considered to be elevated releases.

The analyses above assumed that the reactor was operated at full power for an entire year. In practice, however, the licensee is required by TS 3.7.2 to limit reactor operation such that the 10 mrem annual public dose constraint in 10 CFR 20.1101(d) will not be exceeded. TS 3.7.2 specifies the operational limits for the discharge of Ar-41 to the environment, and the surveillances on those limits, as follows:

TS 3.7.2 Argon-41 Discharge

Specification:

1. Ar-41 emissions resulting from licensed UFTR operation shall not exceed the total effective dose limit of 10 CFR 20.1101(d).

2. Energy generation (kW-hours) of the UFTR shall be limited to ensure TS 3.7.2.1 is not exceeded.

SURVEILLANCE REQUIREMENTS

	SURVEILLANCE	FREQUENCY
SR 3.7.2.1	Verify UFTR energy generation is within the limit	Quarterly
SR 3.7.2.2	Verify the expected total effective dose equivalent to the individual member of the public likely to receive the highest dose from Ar-41 emission is within the limit of 10 CFR 20.1101(d)	Semiannual
SR 3.7.2.3	Determine the UFTR energy generation limit based on measurement of the stack effluent discharge	Semiannual

TS 3.7.2.1 establishes a limit on UFTR operation, such that Ar-41 emission from the UFTR will not result in the maximally exposed member of the public receiving more than 10 mrem per year limit specified in 10 CFR 20.1101(d). TS 3.7.2.1 helps to ensure that the 10 CFR 20.1101(d) constraint (10 mrem) on annual public doses from the routine airborne emissions of radioactive material in is not exceeded. The NRC staff also finds that TS 3.7.2.1 limits the annual public dose to less than 100 mrem as required in 10 CFR 20.1301. Based on the information provided above, the NRC staff concludes that TS 3.7.2.1 is acceptable.

TS 3.7.2.2 establishes a limit on the energy generation of the UFTR to ensure that the limit in TS 3.7.2.1 is not exceeded. In SAR Section 11.1.1.1.2, the licensee stated that it ensures compliance with the limit in TS 3.7.2.1 by administratively limiting EFPHs of operation, which limits the Ar-41 produced by the UFTR. Semiannual surveillance measurements of the stack effluent, under SR 3.7.2.3, are used to determine instantaneous Ar-41 concentration. Based on this instantaneous concentration and stack release point parameters, a pro rata monthly EFPH limit is calculated, per the semiannual SR 3.7.2.3, to ensure compliance with the TS 3.7.2.1 limit. According to the licensee, as stated in SAR 11.1.1.1.2, prior to reactor operation, the cumulative EFPHs for the month are compared to this monthly EFPH limit to ensure that the monthly EFPH limit will not be exceeded. The NRC staff finds that this is an acceptable method to help ensure that public doses from Ar-41 are below the 10 mrem constraint of 10 CFR 20.1101(d), and also finds that TS 3.7.2.2 will help ensure compliance with the 100 mrem public dose limit in 10 CFR 20.1301. Therefore, based on the information above, the NRC staff concludes that TS 3.7.2 is acceptable.

SR 3.7.2.1 establishes the requirement to verify UFTR energy generation is within the limit established by the methodology discussed in TS 3.7.2.2 quarterly. SR 3.7.2.2 establishes the requirement for the UFTR staff to verify that the expected TEDE from Ar-41 to the maximally-exposed member of the public is within the limit established by TS 3.7.2 1 (10 mrem). SR 3.7.2.3 establishes the requirement to determine the energy generation limit based upon measurements of stack effluent discharge, which is used to limit UFTR operations to meet TS 3.7.2. The NRC staff finds that the methodology established by these SRs is acceptable because it helps ensure compliance with 10 CFR 20.1101(d) and 10 CFR 20.1301, and that the surveillance interval is consistent with the guidance in ANSI/ANS-15.1-2007 and NUREG-1537, Appendix 14.1. Therefore, on the basis of this information, the NRC staff concludes that SRs 3.7.2.1, 3.7.2.2, and 3.7.2.3 are acceptable.

As stated above, in SAR 11.1.1.1.2, the licensee calculates a monthly EFPH limit based on the instantaneous Ar-41 concentration in the stack effluent determined during the semiannual surveillance. Based on this instantaneous concentration and stack release point parameters, a monthly EFPH limit is calculated from the semiannual surveillance measurement to ensure compliance with the annual TEDE constraint of 10 mrem in 10 CFR 20.1101(d). As an example, the licensee stated that based on the Ar-41 production measurements taken during the October 2008 performance of this semiannual surveillance, and the annual TEDE calculated based on those measurements assuming continuous full-power operation (19.5 mrem), the UFTR operation was limited to 375 EFPHs per month to ensure compliance with the annual 10 mrem constraint.

TS 6.7.1.5 requires a summary of the nature and amount of radioactive gaseous effluents released from the facility to be included in the annual operating report for the facility, and TS 6.8.3.1 requires records of these effluent releases to be retained for the lifetime of the facility (TS 6.7.1.5 and TS 6.8.3.1 are discussed and found acceptable in SER Chapter 7).

The NRC staff reviewed the UFTR annual reports from 2002 through 2015 (Refs. 28-40), and noted that from September 2009 through February 2015, the reactor was not operated, so no measureable Ar-41 was released. Between March 2015 and August 2015, the reactor was operated a total of approximately 5,566 kWh (55.66 EFPHs), and the licensee calculated based on the measurement of Ar-41 production made following the UFTR conversion (4,430.93 μCi/kWh) that approximately 24.66 Ci of Ar-41 were released during this period of operation. The NRC staff finds that this Ar-41 release is very small relative to the 4,260.5 Ci release that the licensee calculated would result in a public dose of 19.5 mrem; therefore, actual public doses from exposure to Ar-41 produced by reactor operation for the remainder of 2015 would also have been very small.

The licensee has an established environmental radiation monitoring program (see SER Section 5.1.7) that measures the potential doses at locations near the UFTR. Seasonal monitoring of these measurements provides an indication of the potential public dose that could affect the reactor operational hours, also helping to maintain the annual dose below the 10 mrem constraint of 10 CFR 20.1101(d).

The NRC staff reviewed the analyses in the SAR, as supplemented, related to airborne radiation sources. For the analyses of doses from Ar-41, the NRC staff reviewed the licensee's calculation methodologies and assumptions, and except as noted above, determined that they were conservative and consistent with accepted industry practices. The NRC staff also performed confirmatory calculations of the dose from Ar-41 to members of the public. Based on the analyses that demonstrate that the UFTR routine gaseous effluent releases are within the limits in 10 CFR Part 20, as well as the NRC staff's review of historical Ar-41 releases at the UFTR reactor as described in the annual operating reports, the NRC staff concludes that the UFTR's production and control of airborne radiation sources are acceptable for the renewal period.

Liquid Radiation Sources

As stated in SAR Section 11.1.1.2, the only liquid radiation source present at the UFTR is primary coolant water. The radioactivity in the primary coolant comes from activation of corrosion products in the primary coolant when reactor pool water flows through the core. However, the primary coolant system includes a filter and demineralizer which are designed to remove impurities, including activated corrosion products, in the primary system cleanup system. Radioactive demineralizer resin and filter cartridges are treated as solid waste. The SAR also states that samples taken during previous years of operation show that typical beta radioactivity in the primary system is between 1.3×10^{-7} μCi/mL and 1.5×10^{-7} μCi/mL.

Normal operation of the UFTR does not produce large amounts of liquid radioactive waste. However, small amounts of water collected from the primary coolant system (or other systems to which primary coolant could potentially leak) during sampling activities are diluted and released as effluents. Larger quantities of water resulting from operation of the facility heating, ventilation, and air conditioning systems are used to dilute the small amounts of water from the primary coolant. These liquid wastes are sent to holdup tanks. Following sampling, the tanks are discharged to the University of Florida sanitary sewage system in accordance with 10 CFR Part 20. Liquid radioactive waste management at the UFTR is also discussed in SER Section 5.2.2.

TS 6.7.1.5 requires a summary of the nature and amount of radioactive liquid effluents released from the facility to be included in the annual operating report for the facility, and TS 6.8.3.1

requires records of these effluent releases to be retained for the lifetime of the facility (TS 6.7.1.5 and TS 6.8.3.1 are discussed and found acceptable in SER Chapter 7).

The NRC staff reviewed the information above. The NRC staff finds that liquid radioactive sources at the UFTR are of small quantity, and that the licensee has implemented procedures and controls to help ensure that doses from liquid radioactive sources associated with the continued normal operation of the UFTR are small. The NRC staff also finds that the licensee controls access to the liquid sources, and that the disposal will be in compliance with 10 CFR Part 20. Therefore, the NRC staff concludes that control of liquid radioactive sources at the UFTR is acceptable for the renewal period.

Solid Radiation Sources

SAR Section 11.1.1.3 indicates that the primary solid radiation sources include the fuel in the reactor; irradiated fuel in the fuel storage pit; new fuel stored in the fuel safe; sealed neutron startup sources; fission chambers; solid wastes; neutron-activated materials including the reactor structure and systems; and experimental devices. The irradiated fuel comprises the bulk of the total activity present. The two startup sources include an up to 25 Ci antimony-beryllium (SbBe) source and a one curie plutonium-beryllium (PuBe) source. Solid radioactive wastes at the UFTR, and the management and disposal of solid wastes, are discussed in SER Section 5.2.2. The UFTR radiation protection program describes processes for the safe use of solid radiation sources, including the use of administrative controls, radiation work procedures, training, and the use of temporary shielding to minimize exposure during the handling and storage of solid radioactive material.

The NRC staff reviewed the information on solid radiation sources above, and finds that the licensee has implemented procedures and controls to help ensure that doses from solid radiation sources at the UFTR reactor facility are small. The NRC staff also finds that the licensee controls access to the solid sources, and that their disposal will be in compliance with NRC regulations. Therefore, the NRC staff concludes that the control of solid radiation sources at the UFTR is acceptable for the renewal period.

5.1.2 Radiation Protection Program

The regulations in 10 CFR 20.1101(a) requires each licensee to develop, document, and implement a radiation protection program. SAR Section 11.1.2 describes the UFTR radiation protection program. The UFTR has a structured radiation protection program and a health physics staff that has the capabilities to determine, control, and document occupational and public radiation exposures. The basic information in the SAR is supported by detailed TSs that define the required details of the Radiation Protection Program. These requirements are in TS Section 6.0, and includes elements and topical areas needed in an established radiation protection program, including:

- Organization (structure, responsibility, staffing, and selection of trained personnel),
- review and audit,
- radiation safety,
- procedures,
- experimental review and approval,
- required actions,

- reports, and
- records.

SAR Section 11.1.2 states that the University of Florida administration established a University-wide Radiation Control Program in the early 1960s. The primary purposes of this program are to assure the radiological safety of all University personnel, to ensure that radiation exposures are maintained ALARA, and to make certain that ionizing radiation sources will be procured, used, and stored in accordance with Federal and State regulations. The SAR establishes the commitment of the University to regulatory compliance and overall radiation safety. The TSs provide an organizational chart (TS Figure 6-1), which shows that line responsibility for the Radiation Control Program is derived from the President and ultimately resides with the Radiation Control Officer (RCO). The University organization also defines a Radiation Control Committee, which is comprised of representatives from departments involved in the use of ionizing radiation.

The duties of the RCO include approving all University procedures involving radiation exposure and all changes in such procedures (radiation work permits), consulting with potential radioisotope users, and advising on radiation safety practices. The RCO has the authority to suspend any operation causing excessive radiation hazards as rapidly and safely as possible. In carrying out this duty, the RCO reports directly to the Director, Environmental Health and Safety. The Radiation Control Office distributes the "University of Florida Radiation Control Guide" that requires University of Florida radiation workers to have documented training and expertise in the handling and control of radioactive substances before granting approval for possession of radioisotopes.

The SAR indicates that specific procedures are to be followed for specific activities; for example, during maintenance operations. These procedures are outlined in a series of Standard Operating Procedures (SOPs) that include radiation limits for designated activities and other requirements for operations that involve radioactive and waste handling and shipment. Facility staff and visitors receive training on radiation protection and on the techniques for avoiding, limiting, and controlling exposure commensurate with their risk and sufficient for their work or visit.

10 CFR 20.1101(c) requires that licensees periodically (at least annually) review the radiation protection program content and implementation. The SAR indicates that the Reactor Safety Review Subcommittee (RSRS) performs formal audits periodically to determine ways by which to reduce exposures to individuals, based on exposure records and recommendations from the UFTR facility operating personnel. TS 6.2.2 requires that the RSRS meet at least annually, and TS 6.2.3 requires the RSRS to audit the conformance of facility operation (including radiation protection activities) to the TSs and license on an annual basis (TSs 6.2.2 and 6.2.3 are discussed and found acceptable in SER Chapter 7).

TS 6.3 defines the responsibility for implementation of the UFTR radiation protection program as follows:

TS 6.3 Radiation Safety

The Radiation Control Officer shall be responsible for implementation of the radiation protection program and shall report to the Director, Environmental Health and Safety.

TS 6.3 establishes the requirement that the RCO is responsible for overall implementation of the radiation protection program. This specification helps to ensure that responsibility for the program is understood and communicated. The NRC staff finds that this specification is consistent with the guidance in ANSI/ANS-15.1-2007 and NUREG-1537, Appendix 14.1. Therefore, on the basis of this information, the NRC staff concludes that TS 6.3 is acceptable. To help ensure that 10 CFR Part 20 dose limits are not exceeded during potential emergencies or accidents at the UFTR, a timely and orderly evacuation of operating personnel and reactor building occupants from the reactor cell and the reactor building is necessary (for the UFTR maximum hypothetical accident, which is discussed in SER Section 6.1, the licensee assumes that reactor cell occupants can be evacuated within 5 minutes). TS 3.4 establishes requirements for equipment to help implement that evacuation, which minimizes radioactive hazards to the personnel being evacuated, as follows:

TS 3.4 Reactor Cell Evacuation Alarm Interlock

Specification: Two area radiation monitors simultaneously alarming high shall cause an automatic actuation of the evacuation alarm.

ACTIONS

	CONDITION	REQUIRED ACTIONS		COMPLETION TIME
A.	Evacuation alarm interlock inoperable.	A.1	Restore operability	15 minutes
			AND	
		A.2	Suspend CORE ALTERATIONS, irradiated fuel movement, irradiated fueled EXPERIMENT movement, movement of experiments with significant potential for airborne releases, and movement of concrete block shielding over the top of the core in MODE 5	15 minutes

SURVEILLANCE REQUIREMENT

	SURVEILLANCE	FREQUENCY
SR 3.4	Verify proper interlock function	Weekly

TS 3.4 establishes a requirement for the automatic actuation of the building evacuation alarm if two ARMs simultaneously alarm high. This specification helps to ensure that radiation in excess of expected levels result in an evacuation alarm.

SR 3.4 establishes the requirement to verify TS 3.4, and specifies the frequency and type of testing to ensure that the building evacuation alarm is operable. SR 3.4 establishes a requirement to verify the operability of the reactor cell evacuation alarm interlock on a weekly basis. The NRC staff finds that the weekly surveillance interval is acceptable per the guidance in NUREG-1537, Appendix 14.1 and ANSI/ANS-15.1-2007. Therefore, on the basis of this information, the NRC staff concludes that TS 3.4 and SR 3.4 are acceptable.

The action statement associated with TS 3.4 and SR 2.4 allows for 15 minutes to determine and correct operation of the Reactor Cell Evacuation Alarm Interlock if it is discovered it does not

meet the minimum operability requirements of TS 3.4. Additionally, any core alterations, irradiated fuel movement, irradiated fueled experiment movement, movement of experiments with significant potential for airborne releases, and movement of concrete block shielding over the top of the core in Mode 5 must be terminated within 15 minutes if the Reactor Cell Evacuation Alarm Interlock will not be returned to operation within that time frame. This is to allow an evolution in progress to be completed and placed in a safe configuration. It is not intended that evolutions that have not started would be performed. The NRC staff reviewed these action statements and finds that 15 minutes is a reasonable amount of time to allow for correction of an evacuation alarm interlock anomaly before disrupting reactor operations. Additionally, the NRC staff finds that the 15 minutes to cease the operations for core alterations, irradiated fuel movement, irradiated fueled experiment movement, movement of experiments with significant potential for airborne releases, and movement of concrete block shielding over the top of the core in Mode 5 allows for a safe and orderly completion of an evolution that was already in progress and is reasonable.

The NRC staff has reviewed the radiation protection program and supporting TSs presented in the SAR for the UFTR. This review included an evaluation of:

- the roles, responsibilities, authorities, organization, and staffing of the radiation protection organization;
- the roles, responsibilities, authorities, staffing, and operation of committees responsible for the review and audit of the radiation protection program;
- the radiation protection training program;
- the radiation protection plans and information that form the bases of procedures and the management systems employed to establish and maintain them;
- the process to evaluate the radiation protection program to improve the program and the process to examine problems and incidents at the facility; and
- the management of records relating to the radiation protection program.

The NRC inspection program also routinely reviews the radiation protection program at the UFTR facility, and the results of these reviews are documented in IRs. The NRC staff reviewed the IRs from 2008 through 2016 (Refs. 41-50), and noted three Severity Level IV violations in 2010 (Ref. 43), 2011 (Ref. 45), and 2015 (Ref. 49) related to timely surveillance (calibration) of TS-required radiation monitoring equipment, operability of TS-required radiation monitors, and periodic familiarization training with emergency responders respectively. However, corrective actions planned and taken to correct the violation and prevent recurrence were adequately addressed during follow-on inspections, as documented in the IR (IR 50-83/2010-201 (Ref. 43), IR 50-83/2011-201 (Ref. 45), and IR 50-83/2016-201 (Ref. 50)).

The NRC staff finds that the radiation protection program presented in the SAR complies with 10 CFR 20.1101(a) and 10 CFR 20.1101(c), and is implemented in an acceptable manner. The NRC staff further finds that the licensee provides reasonable assurance that its commitment to radiation protection in all activities will protect the facility staff, the environment, and the public from exposure to radiation in excess of the 10 CFR Part 20 limits. Therefore, based on the information above, the NRC staff concludes that the radiation protection program at the UFTR is acceptable.

5.1.3 ALARA Program

10 CFR 20.1101(b) requires licensees to use procedures and engineering controls to achieve occupational doses and doses to member of the public that are ALARA. The University of Florida ALARA program is an integral part of the UFTR SOPs. The licensee's ALARA program is discussed in Section 11.1.3 of the SAR, as well as in the University of Florida's written ALARA plan entitled, "Program for Maintaining Occupational Radiation Exposure for Non-Medical Licensed Activities at the University of Florida As Low As Reasonable Achievable (ALARA)" (Ref. 25). As described in the ALARA plan, the University and the UFTR facility are committed to a program for keeping radiation exposures (individual and collective), including exposures associated with effluents and waste generation, ALARA. The UFTR SOPs contain detailed specifications, limits, and procedures to assure that ALARA exposure goals are met and documented during UFTR operations (see TS 6.4.5). In addition, TS 3.7.2 (see SER Section 5.1.1) is intended to control the generation of Ar-41 at the UFTR such that the maximum public dose from Ar-41 is below the 10 mrem ALARA constraint in 10 CFR 20.1101(d).

The administrative organization at the University of Florida and the UFTR is designed to foster the ALARA concept within the UFTR facility. While the University RCO has oversight responsibility for ensuring adherence to the ALARA concept for all activities involving radiation or radioactive materials at the University, responsibility for the actual implementation of the UFTR ALARA program rests with UFTR management. The RCO and Reactor Manager (or Facility Director) perform an annual, formal ALARA review to determine methods by which exposures, as well as effluent levels and waste generation, might be reduced. This review includes operating procedures and past exposure records, inspections, and consultations with the radiation control staff. A brief summary of the audit is prepared covering the scope of the review and the conclusions reached. The RCO and Reactor Manager are active members of the RSRS, as required by UFTR TSs and the RSRS Charter. UFTR management will consider any modifications or changes recommended by the RSRS, as well as those from the annual reviews.

The ALARA plan indicates that modifications to operating and maintenance procedures and to equipment and facilities will be made when they will reduce exposures at reasonable costs. Records will be maintained to demonstrate that improvements have been sought, that modifications have been considered, and that they have been implemented where reasonably achievable. Where modifications have been considered but not implemented, records will be maintained to document the reasons for not implementing them. These records will normally be generated as part of the UFTR Quality Assurance Program. The UFTR ALARA program requires the RCO to investigate all known instances of deviation from good ALARA practices at the UFTR facility and determine the causes, with support of and in conjunction with UFTR management. The results of such investigations will be provided to UFTR management and the RSRS for review and necessary action. The RCO may require changes in working procedures to maintain exposures ALARA.

In accordance with the ALARA plan, UFTR management has established a set of ALARA goals and a set of increasing investigation levels for individual dose and gaseous and liquid radioactive effluents. These investigation levels represent a tiered approach to assure ALARA is evaluated and maintained by requiring increased management oversight and action as each level is met or exceeded.

The ALARA plan also indicates that, in addition to maintaining doses to individuals as far below the limits as reasonably achievable, the sum of the doses received by all exposed individuals

will also be maintained at the lowest practicable level in keeping with the goals and mission of the UFTR facility. This will be ensured by the licensee's compliance with the University of Florida's radiation protection program and UFTR TS requirements related to radiation and contamination surveys at the UFTR.

The NRC staff reviewed the information above regarding the ALARA program at the UFTR facility. The NRC staff also reviewed the IRs from 2008 through 2016 (Refs. 41-50) and the UFTR annual reports from 2002 through 2015 (Refs. 28-40), and found no significant issues related to ALARA implementation at the UFTR facility, and that that the licensee met regulatory requirements related to radiation doses. The licensee's annual reports from 2002 through 2015 also showed no radiation exposures greater than 25 percent of 10 CFR Part 20 dose limits during any of the annual (September through August) reporting periods, although a 2010 NRC IR (Ref. 43) noted that one reactor staff member received a TEDE of 1,415 mrem (approximately 28 percent of the 5,000 mrem occupational dose limit in 10 CFR 20.1201, "Occupational dose limits for adults") during calendar year 2009, due to one-time activities related to disassembly and rebuilding of reactor components following a reactor coolant leak.

The NRC staff finds that the licensee's policies and procedures give reasonable assurance that doses to occupational workers and the public will be maintained below regulatory limits and ALARA. The controls and procedures for limiting access and personnel exposure (including dose limits, effluent release limits, ALARA goals, and ALARA action levels) meet the applicable radiation protection program requirements and provide reasonable assurance that radiation doses to the environment, the public, and facility personnel will be ALARA. The NRC staff finds that the ALARA program is adequately supported at the highest levels of management for the facility. The NRC staff finds that the overall UFTR ALARA program complies with 10 CFR Part 20.1101, and provides reasonable assurance that for all facility activities, radiation exposure will be maintained ALARA. Therefore, based on the information above, the NRC staff concludes that the UFTR ALARA program is acceptable.

5.1.4 Radiation Monitoring and Surveying

10 CFR 20.1501(a) requires that each licensee shall make, or cause to be made, surveys of areas, including the subsurface, that:

1. May be necessary for the licensee to comply with the regulations in this part; and
2. Are reasonable under the circumstances to evaluate
    a. The magnitude and extent of radiation levels; and
    b. Concentrations or quantities of radioactivity; and
    c. The potential radiological hazards of the radiation levels and residual radioactivity detected.

10 CFR 20.1501(c) requires the licensee to ensure that instruments and equipment used for quantitative radiation measurements (e.g., dose rate and effluent monitoring) are calibrated periodically for the radiation measured.

SAR Section 11.1.4 provides a representative list of the various radiation monitoring and surveying instruments at the UFTR facility. The licensee has a comprehensive set of radiation instruments that can detect the various types of radiation and radioactive material that may be

encountered at the facility. These radiation instruments provide information to operating personnel on any impending or existing danger from radiation. These instruments include the area radiation monitors (located at various locations in the reactor cell), the stack monitor (in the effluent stack), and the air particulate detector (on the reactor cell ground floor), which have operability, testing, and calibration requirements per TS 3.7.1, and are also discussed in more detail in SER Section 4.7. Other non-TS-required radiation monitoring instruments are also periodically calibrated as appropriate.

The routine radiation surveying and monitoring program at the UFTR facility is structured such that adequate measurements of dose rates and contamination levels are made, commensurate with the amount and type of work that is being performed with radioactive material and the potential for elevated dose rates or contamination in a given area. The intent of the surveying and monitoring is to prevent uncontrolled releases or spread of radioactive material, and to minimize radiation exposure. Surveys performed on a weekly basis include swipe surveys of surface contamination, air sampling (which provides a check on the proper functioning of the air particulate detector), water sampling (to check radioactivity levels in the reactor coolant), and gamma radiation field dose rate surveys (which are used to check for leakage around beam plugs and through the stacked-block reactor shield). As required by TS 6.8.1.5 (discussed and found acceptable in SER Chapter 7), records of facility radiation surveys that are performed to comply with 10 CFR 20.1501(a) or other NRC regulations must be maintained for at least 5 years.

As discussed in SER Section 5.1.5, operators and other personnel working in the reactor wear individual radiation dose monitoring badges, as required. The UFTR facility, in conjunction with the University Radiation Control Office, also conducts an environmental monitoring program, which is discussed in SER Section 5.1.7.

Based on its review of the information above, the NRC staff finds that the licensee's radiation monitoring and surveying, including the equipment used and the surveillances performed on the equipment, are adequate for detecting the types and intensities of radiation likely to be encountered within the facility and will help ensure compliance with 10 CFR 20.1501(a) and 10 CFR 20.1501(c). Therefore, based on the information above, the NRC staff concludes that the radiation monitoring and surveying at the UFTR facility is acceptable.

5.1.5 Radiation Exposure Control and Dosimetry

SAR Section 11.1.5 discusses radiation exposure control and dosimetry at the UFTR facility. As discussed in the SAR, the UFTR facility is of the modified Argonaut reactor type, designed to minimize radiation exposure to all individuals. SAR Table 11-5 shows that at full power, typical radiation levels on the top of the reactor shield tank are approximately 15 mrem per hour, and radiation levels in other areas of the reactor cell are approximately 2 mrem per hour or lower. The reactor is used as a teaching tool and for research operations; therefore, the UFTR management imposes a stringent radiation safety program to help ensure that radiation exposures meet the ALARA criterion. This program is implemented through UFTR SOPs, which are designed to minimize exposure rates and ensure the health and safety of the people in and around the facility. Radiation exposure control at the UFTR includes the use of shielding, ventilation systems (see SER Section 5.1.1), entry control and posting requirements, and protective clothing, as appropriate.

Operators and other personnel working in the reactor wear film, thermoluminescence dosimeter (TLD), Luxel, or other individual radiation dose monitoring badges as required to help

ensure compliance with applicable dose limits. Depending on the type of work being performed, a direct-reading pocket dosimeter, extremity or ring badge, or other dosimeter may also be worn if warranted due to expected radiological conditions. As required by TS 6.8.3.3 (discussed and found acceptable in SER Chapter 7), records of radiation exposures for all personnel monitored must be retained for the lifetime of the facility.

The NRC staff reviewed the licensee's annual operating reports for 2002 through 2015 (Refs. 28-40), and the NRC IRs from 2008 through 2016 (Refs. 41-50), and noted no significant issues related to radiation exposure control and dosimetry.

The NRC staff reviewed the information above regarding the licensee's exposure control and dosimetry, and finds that personnel exposures at the UFTR facility are satisfactorily controlled by the design of the facility, and through the UFTR radiation protection and ALARA programs. Therefore, based on the information above, the NRC staff concludes that the radiation exposure control and dosimetry and the UFTR reactor facility are acceptable.

5.1.6 Contamination Control

SAR Section 11.1.6 provides information on contamination control at the UFTR facility. Radioactive contamination is controlled by using standard operating procedures, contamination control techniques, and regular contamination surveys. UFTR procedures contain provisions to control contamination. Examples of these provisions are as follows:

- Personnel are required to monitor their hands and feet for contamination when leaving contaminated areas, areas that are likely contaminated, or the reactor cell.
- Materials, tools, and equipment are surveyed for contamination before removal from contaminated areas or restricted areas where contamination is likely.
- Contaminated areas, and restricted areas where contamination is likely, are surveyed routinely for contamination. Potentially contaminated areas are also periodically monitored as appropriate, depending on the nature and quantity of the radioactive materials present.
- Radiation work permits are required to ensure that proper radiological protective measures are followed during work which has an actual or potential radiological hazard.
- Anti-contamination clothing designed to protect personnel against contamination is used when recommended or required by work conditions.
- Facility staff are trained on the risks of contamination, and on the techniques for avoiding, limiting, and controlling contamination.

The NRC staff reviewed the information in SAR Section 11.1.6 as described above. The NRC staff also reviewed the licensee's annual operating reports for 2002 through 2015 (Refs. 28-40), and the NRC IRs from 2008 through 2016 (Refs. 41-50), and noted no significant issues related to contamination control at the UFTR facility, indicating that adequate controls exist to prevent the spread of radiological contamination within the facility. Therefore, based on its review of the information above and on the licensee's history of satisfactory contamination control, the NRC staff concludes that adequate controls exist to prevent the spread of contamination within the facility.

5.1.7 Environmental Monitoring

SAR Section 11.1.7 describes the UFTR environmental monitoring program. This program is conducted by the UFTR facility staff, under the supervision of the Radiation Control Office. The program is intended to help ensure that the effluent monitoring and control at the UFTR is effective, and that the radiological environmental impact of reactor operations is ALARA. The environmental monitoring is conducted by measuring the gamma doses at selected fixed locations outside the restricted area (outdoors, in the nearby vicinity of the reactor building, or indoors at various unrestricted areas in the building). This is done using personnel monitoring devices, such as TLDs, which are collected and evaluated monthly. TS 6.7.1.6 requires a summary of the results of these environmental monitoring surveys to be included in the annual operating report for the facility, and TS 6.8.3.2 requires records of these environmental monitoring surveys to be retained for the lifetime of the facility (TS 6.7.1.6 and TS 6.8.3.2 are discussed and found acceptable in SER Chapter 7). The NRC staff notes that these TSs require the licensee to conduct an environmental monitoring program.

The NRC staff reviewed the licensee's annual operating reports for 2002 through 2015 (Refs. 28-40). The NRC staff noted that except for one specific monitoring location near the top of the UFTR stack (which is not a publicly-accessible location, and which showed elevated dose readings due to radioactive material stored in the reactor cell during a maintenance outage), all environmental monitors showed annual doses of 40 mrem or less, which is within the 100 mrem annual public dose limit in 10 CFR 20.1301. Additionally, except for the stack location and other monitoring locations that were in close proximity to radioactive material being stored in the reactor cell, all environmental monitoring results were indistinguishable from normal environmental background levels.

The NRC staff reviewed the information above regarding environmental monitoring at the UFTR facility, including annual operating reports, which indicated that the operation of the reactor had not adversely affected the environment. The NRC staff finds that the environmental monitoring program helps to assess and provide an early indication of any environmental impact caused by the reactor facility operation. Therefore, based on the information above, the NRC staff concludes that the environmental monitoring program at the UFTR facility is acceptable.

5.2 Radioactive Waste Management

The purpose of the radioactive waste management program is to help ensure that radioactive waste materials are identified, assessed, controlled, and disposed of in accordance with all applicable regulations, and in a manner that will protect UFTR staff, the public, and the environment. SAR Section 11.2, as supplemented, discusses the waste management program at the UFTR facility. The NRC inspection program also routinely reviews radioactive waste management at the UFTR facility. The licensee's historical performance in these areas, as documented in NRC IRs and the annual operating reports of the UFTR facility, in the SAR, as supplemented, and as observed by the NRC staff during site visits, provide documentation that measures are in place to minimize radiation exposure to UFTR staff and the public and to provide adequate protection against operational releases of radioactivity to the environment.

5.2.1 Radioactive Waste Management Program

The UFTR facility generates small amounts of radioactive waste in solid form. Although the facility releases radioactive Ar-41 gas, and small amounts of radioactive water to the

environment (see SER Section 5.1.1), Ar-41 gas and radioactive water are considered effluents rather than waste gas or liquid.

The objective of the radioactive waste management program at the UFTR facility is to ensure that radioactive waste is minimized, and that it is properly handled, stored, and disposed. Radioactive waste handling and shipping/transfer activities are performed using SOPs, and are overseen by University of Florida health physics staff.

TS 6.2.4.1, which is discussed and found acceptable in SER Chapter 7, requires that the RSRS conduct an annual audit of facility operations (including the radioactive waste management program) for conformance to the TSs and license conditions.

The NRC staff reviewed the information above. The NRC staff also reviewed the licensee's annual operating reports for 2002 through 2015 (Refs. 28-40), and the NRC IRs from 2008 through 2016 (Refs. 41-50), and noted that there were no significant issues related to radioactive waste or effluent management, handling, or releases. The NRC staff finds that the licensee's practices demonstrate reasonable assurance that radiological wastes or releases from the facility will not exceed applicable regulatory limits, nor will they pose an unacceptable radiation risk to the environment or the public. The NRC staff also finds that the licensee has adequate procedures in place to prevent uncontrolled personnel exposures from radioactive waste operations and to provide the necessary accountability to prevent any potential unauthorized release of radioactive waste. Therefore, based on the information above and the annual operating reports and IRs, the NRC staff concludes that the radioactive waste management program at the UFTR facility is acceptable.

5.2.2 Radioactive Waste Controls

Gaseous Waste Controls

As discussed in SER Section 5.2.1, the UFTR facility does not dispose of gaseous wastes, although Ar-41 gas is released as an effluent. Ar-41 is the only gaseous effluent released in significant quantities during UFTR operations. The UFTR has no special off gas collection systems or storage tanks for Ar-41. The small amounts that are produced at the UFTR are typically mixed with other air from the facility in the ventilation systems, and are discharged with the ventilation system exhaust. Controls and monitoring related to Ar-41 are discussed in SER Section 5.1.1.

TS 6.7.1.5 requires a summary of the nature and amount of radioactive gaseous effluents released from the facility to be included in the annual operating report for the facility, and TS 6.8.3.1 requires records of these effluent releases to be retained for the lifetime of the facility (TS 6.7.1.5 and TS 6.8.3.1 are discussed and found acceptable in SER Chapter 7).

Liquid Waste Controls

As discussed in SAR Section 11.2.1.2, normal operation of the UFTR does not produce large amounts of liquid radioactive waste. However, small amounts of water collected from the primary coolant system (or other systems, such as the secondary coolant system and shielding tank, to which primary coolant could potentially leak) during sampling activities are diluted and released as effluents. Larger quantities of water resulting from operation of the facility heating, ventilation, and air conditioning systems are used to dilute the small amounts of water from the primary coolant. These liquid wastes are routed to a tank in a corner of the reactor cell.

Periodically, the contents of this tank are pumped to another tank, the 1,000-gallon waste water holdup tank, which is located above ground outside the reactor building, within the fenced area. Periodic samples of the liquid are taken by UFTR staff and assayed to determine the total activity level present. If activity levels are within acceptable levels for release to sanitary sewerage, as determined by 10 CFR 20.2003, "Disposal by release into sanitary sewerage," and 10 CFR Part 20, Appendix B, Table 3, then the contents of the waste water holdup tank are released into the University of Florida sanitary sewage system. The licensee uses SOPs to establish the standard procedures for the circulation, sampling, analysis, and discharge of liquid effluents to ensure compliance with the limits in 10 CFR Part 20.

TS 6.7.1.5 requires a summary of the nature and amount of radioactive liquid effluents released from the facility to be included in the annual operating report for the facility and TS 6.8.3.1 requires records of these effluent releases to be retained for the lifetime of the facility (TS 6.7.1.5 and TS 6.8.3.1 are discussed and found acceptable in SER Chapter 7).

Although liquid waste is typically not shipped or transferred from the facility, according to SAR 11.1.3, any radioactive waste that must be shipped from the UFTR facility will be processed as appropriate, per UFTR standard operating procedures.

Solid Waste Controls

SAR Section 11.2.1.3 indicates that typical solid radioactive waste at the UFTR facility consists of irradiated samples, packaging materials, contaminated gloves and clothing, used primary coolant demineralizer resin heads, filter traps on the waste water holdup tank, and other similar sources. These wastes are typically low-level and are collected using techniques that are approved by radiation control personnel. The UFTR low-level solid waste is accumulated and stored in authorized containers. When filled, the low-level waste containers are sealed and stored onsite until they are shipped off campus by a licensed carrier to a licensed facility for burial. Solid wastes are transferred and shipped in accordance with SOPs.

Conclusion on Radioactive Waste Controls

The NRC staff reviewed the information above regarding gaseous, liquid, and solid radioactive waste controls. The NRC staff also reviewed the licensee's annual operating reports for 2002 through 2015 (Refs. 28-40), and the NRC IRs from 2008 through 2016 (Refs. 41-50), and noted that there were no significant issues related to radioactive waste controls. The NRC staff finds that the licensee's practices demonstrate reasonable assurance that radiological wastes or releases from the facility will not exceed applicable regulatory limits, nor will they pose an unacceptable radiation risk to the environment, UFTR staff, or the public. The NRC staff also finds that the licensee has adequate procedures in place to prevent uncontrolled personnel exposures from radioactive waste operations and to provide the necessary accountability to prevent any potential unauthorized release of radioactive waste. Therefore, based on the information above, the NRC staff concludes that the radioactive waste controls at the UFTR facility are acceptable.

5.2.3 Release of Radioactive Waste

As stated in SAR 11.1.3, radioactive waste handling and shipment are addressed in the University-wide ALARA policies. Controls for the release of gaseous radioactive effluents are discussed and found acceptable in SER Section 5.1.1. Controls for the release of liquid

radioactive effluents, and solid radioactive wastes, are discussed and found acceptable in SER Section 5.2.2.

5.3 Conclusions

Based on its review of the information in the SAR, as supplemented, and its observations and review of the licensee's operations, the NRC staff concludes the following regarding the licensee's radiation protection program and radioactive waste management:

- The UFTR radiation protection program complies with the requirements in 10 CFR Part 20.1101(a) and 10 CFR 20.1101(c), is acceptably implemented, and provides reasonable assurance that the UFTR facility staff, the public, and the environment are protected from unacceptable radiation exposures. The radiation protection program is acceptably equipped and staffed with trained individuals. The UFTR management is committed to radiation safety and has defined a program with appropriate lines of authority and communication to allow radiation protection staff to carry out the program.

- The UFTR ALARA program is supported by the highest levels of management, and complies with the requirements of 10 CFR Part 20.1101(b). The radiation protection and radioactive material controls at the UFTR facility provide reasonable assurance that radiation doses to the environment, the public, and UFTR facility staff will be ALARA.

- Facility design and operational procedures limit the production and release of Ar-41 and N-16, and control the potential for occupational and public radiation exposures. Conservative estimates of the quantities of these gases released into restricted and unrestricted areas give reasonable assurance that doses to UFTR staff and the public will be below the applicable 10 CFR Part 20 limits. Liquid radioactive effluents from the facility are also controlled and released in accordance with applicable 10 CFR Part 20 limits. The systems and procedures provided for control of radioactive effluents, when operated and used in accordance with the TSs, are acceptable to help ensure that releases of radioactive materials from the facility are within the limits of NRC regulations and are ALARA.

- The specified surveillance and other TS requirements related to effluents provide the necessary controls to help ensure continued normal operation of the UFTR will not pose a significant risk to the health and safety of the public or the environment, and the dose from the UFTR operations will be below the applicable regulatory limits of 10 CFR Part 20.

- The licensee has adequately identified and described potential radiation sources. The licensee also sufficiently controls radiation sources.

- The radiation monitoring and surveying program at the UFTR facility helps ensure compliance with 10 CFR 20.1501, "General." The results of the radiation surveys carried out at the facility, doses to the persons issued dosimetry, and the results of the environmental monitoring program help confirm that the implementation of the radiation protection and ALARA programs are effective.

- The UFTR program for contamination control meets all regulatory requirements and helps ensure the control of radioactive contamination so that there is reasonable assurance that the health and safety of the UFTR staff, the environment, and the public will be protected.

- The facility radioactive waste management program provides reasonable assurance that radioactive waste produced at the facility will be controlled and handled in accordance with applicable regulations, and its release will not pose an unacceptable radiation risk to the environment or the public.

The NRC staff reviewed the UFTR radiation protection and radioactive waste management programs. The NRC staff finds that the licensee implements adequate and sufficient measures to minimize radiation exposure to facility workers and the public. Therefore, the NRC staff concludes that there is reasonable assurance that the UFTR radiation protection and radioactive waste management programs will provide acceptable radiation protection to UFTR staff, the public, and the environment.

6. ACCIDENT ANALYSIS

The University of Florida Training Reactor (UFTR) safety analysis report (SAR) provides a series of accident analyses discussions to demonstrate that the health and safety of the public and workers are protected during analyzed reactor transients and other hypothetical accident scenarios. The accident analyses provide the basis to establish the UFTR technical specifications (TSs) described in this safety evaluation report (SER). The accident analysis helps ensure that no credible accident could lead to unacceptable radiological consequences to the UFTR staff, the public, or the environment. Additionally, the licensee analyzes the consequences of a maximum hypothetical accident (MHA), which is considered the worst case fuel failure scenario for UFTR that would lead to the maximum potential radiation hazard to facility personnel and members of the public from fission product release. The results of the MHA are used to evaluate the ability of the licensee to respond and mitigate the consequences of this postulated radioactive release.

NUREG-1537, "Guidance for Preparing and Reviewing Applications for the Licensing of Non-Power Reactors," issued February 1996 (Ref. 51) recommends licensees consider the applicability of each of the following accident scenarios:

- Maximum hypothetical accident
- Insertion of excess reactivity
- Loss of coolant accident (LOCA)
- Loss of coolant flow
- Mishandling or malfunction of fuel (fuel handling accident (FHA))
- Experiment malfunction
- Loss of electrical power
- External events
- Mishandling or malfunction of equipment

6.1 Maximum Hypothetical Accident

The licensee described its MHA in SAR Section 13.2.1, as supplemented in the response to RAI 7 (Ref. 24) and other supplemental information (Ref. 25, Ref. 26, and Ref. 83). The MHA for the UFTR is a postulated event in which it is assumed that the reactor core is severely crushed by a heavy concrete shielding slab dropped directly onto the core. The damage to the fuel that results is assumed to be equal to stripping the cladding off of one face of all 14 fuel plates of one fuel assembly. In order to maximize the radionuclide inventory, the licensee assumes that the damage occurs to the fuel assembly with the highest power. In its response to RAI 7.a.i (Ref. 24), the licensee stated that it used a thermal assembly power of 5.44 kilowatt thermal (kWt) which is the highest individual assembly power (for assembly No. 2-3 of the 22-assembly core) given in SAR Section 4.5.2.5 (Ref. 25).

In addition, the licensee used the following assumptions and methodologies for determining the radionuclide inventory:

- The reactor is considered to be operated continuously at 100 kWt (full licensed power) for 30 days.

- The scenario assumes that the accident occurs 30 days after shutdown from full power operation. The 30-day assumption is the shortest time in which the licensee is allowed to remove the concrete blocks after shutdown, per TS 3.9.2 (see SER Section 2.2.1).

- The licensee uses the depletion module of the Scale 6.1 code (Ref. 71) to calculate the radionuclide inventories for the highest power assembly.

The licensee's radioiodine and noble gas inventories for the highest power fuel assembly, calculated using Scale 6.1, are listed in Table 6-1. Additional Scale 6.1 calculations provided by the licensee (Ref. 79), for 30 days of operation followed by 3 days of decay, indicate that some of the selected radioiodines and noble gases (e.g., iodine (I)-129, I-131, krypton (Kr)-85, and xenon (Xe)-133) would require more than 30 days of operation to reach their saturation states. However, the licensee provided an additional Scale 6.1 output, based on 385 days (instead of 30 days) of continuous full-power operation, followed by 3 days of decay (Ref. 80), showing that for I-131 and Xe-133, the inventory difference for 30 days operation plus 3 days decay, versus 385 days operation plus 3 days decay, is small (about 6.5 percent for I-131, and much less than 1 percent for Xe-133). For I-129 and Kr-85, the inventory differences are more significant (approximately one order of magnitude); however, given the comparatively small inventories of those radionuclides relative to other radionuclides released, the U.S. Nuclear Regulatory Commission (NRC) staff notes that the dose contribution from I-129 and Kr-85 relative to the total from all radionuclides would be small (much less than 1 percent). The NRC staff notes that the fission product inventory percentage differences for I-129, I-131, Kr-85, and Xe-133 for 30 days versus 385 days of operation followed by 3 days of decay would be similar if the comparison were made following 30 days of decay. Additionally, although there are no operating limits on UFTR operation other than those imposed by TS 3.7.2 (see SER Section 5.1.1) to limit doses from argon (Ar)-41, the reactor is not typically operated for continuous periods of 30 days or longer (as discussed in SER Section 5.1.1, the reactor was operated a total of only approximately 56 effective full-power hours in the 6-month period from March through August 2015). Therefore, the NRC staff finds the licensee's use of Scale 6.1 with the assumption of 30 days of full-power operation, followed by 30 days of decay, preceding the accident to be acceptable for the licensee's inventory calculation. The licensee is required by TS 6.7.1 to report operating history in the annual report. The NRC staff reviews this report. TS 6.7.2.b.2 requires the licensee to report significant changes in the accident analysis described in the SAR. If future operations would be inconsistent with the operating history assumed in the MHA analysis, the NRC staff would address the issue with the licensee.

The NRC staff performed an independent confirmatory analysis of the licensee's fission product inventories using cumulative fission product yields from the Knolls Atomic Power Laboratory Chart of the Nuclides (Ref. 88) to determine the saturated inventory for the selected isotopes in the highest power assembly, and decaying these saturated inventories by 30 days. Table 6-1 provides a comparison of the NRC staff- and licensee-calculated inventories. The depletion module of the Scale 6.1 code considers all generation (i.e., from fission and decay of other isotopes) and destruction (i.e., from burnup/neutron capture reactions, or decay) of each isotope, while the NRC staff methodology only considers generation of the isotopes from fission during the operation period, and only considers destruction from decay during the 30-day decay period. Therefore, the Scale 6.1 calculation is more accurate. Nevertheless, the NRC staff- and licensee-calculated values are similar for some isotopes, helping to confirm the accuracy of the licensee's inventory calculations. For other isotopes (particularly isotopes such as I-132 that are produced in significant quantities from decay of another fission product, and isotopes such as I-129 and Kr-85 that are long-lived and require very long duration operation to reach saturation), the NRC staff- and licensee-calculated values show significant differences due to the

differences in the calculation assumptions and methodologies used. In some cases, isotopes which have non-zero licensee-calculated values have corresponding NRC staff-calculated values of zero because the NRC calculation did not consider production from decay of other fission products and the entire inventory that existed immediately following reactor shutdown has decayed after the 30-day period.

Table 6-1 MHA – Fuel Assembly Inventory Estimates

Nuclides	UFTR-Calculated Inventories for 30-Day Operation followed by 30-Day Decay (curie (Ci))	NRC Staff Confirmatory Calculation of Saturated Inventories with 30-Day Decay (Ci)
I-129[a]	9.90E-08	3.53E+01[a]
I-130	1.83E-10	2.48E-16
I-131	9.76E+00	1.02E+01
I-132	3.17E-01	0.00E+00
I-133	5.97E-06	1.20E-08
I-135	5.43E-06	0.00E+00
Kr-85m	1.17E-06	0.00E+00
Kr-85[a]	9.12E-02	1.28E+01[a]
Kr-88	3.04E-06	0.00E+00
Xe-133	7.25E+00	5.97E+00
Xe-133m	4.26E-04	6.90E-04
Xe-135	5.66E-06	0.00E+00
Xe-135m	7.00E-07	0.00E+00
[a] The saturated inventories for these isotopes will only occur in very long duration operations, which is not a normal practice for the UFTR.		

Release Fractions

The licensee followed the method described in NUREG/CR-2079, “Analysis of Credible Accidents for Argonaut Reactors,” (Ref. 72) to estimate the potential releases of select radioiodines and noble gases from the fuel into the reactor cell. The licensee assumed that 100 percent of the radioiodines and noble gases that are produced within the recoil range of the fission fragments (about 1.37×10^{-3} centimeters (cm) (5.40×10^{-4} inches)) from the lost cladding surface of one face of 14 fuel plates will be released to the reactor cell. The licensee stated that based on this value for the recoil range of fission fragments, about 2.69 percent of the total radioiodine and noble gas activities in the highest power fuel assembly will be released.

The NRC staff reviewed the licensee's approach along with the information in NUREG/CR-2079. NUREG/CR-2079 summarizes investigations of fission fragment behavior in aluminum matrix fuel applicable to Argonaut research reactors, and indicates that the fission fragment recoil range in aluminum is approximately 1.37×10^{-3} cm. Using the fuel plate characteristic dimensions provided in SAR Table 4-1 (Ref. 27), the NRC staff independently calculated that

the fraction of the total activity that is released from each of the 14 fuel plates in the assembly to be 2.69 percent. The fraction of the activity released from the entire 14-plate assembly is therefore also 2.69 percent. Therefore, the NRC staff finds that the licensee's 2.69 percent release fraction is acceptable.

Atmospheric Dispersion

The licensee stated that the design of the reactor cell ventilation system (required to be operating during movement of concrete shielding per TS 3.5, which is discussed and found acceptable in Section 5.1.1 of this SER) ensures that any releases into the reactor cell from potential accidents are directed out the exhaust stack, where they will be diluted and dispersed.

For releases of radioactive material from the stack following the MHA or FHA (see SER Section 6.5), the licensee used the COMPLY computer code for determining atmospheric dispersion and public exposure. The licensee provided the COMPLY output for the MHA and FHA analyses in a supplemental response (Ref. 83). The COMPLY code is typically used for calculation of doses from routine operational releases, rather than from accidents. The COMPLY code, with the settings and level of calculation detail used by the licensee, calculates doses assuming that radioactive material is released over an entire year; that the wind blows in the direction of the receptor 25 percent of the time; that average (i.e., neutral or Pasquill D) atmospheric conditions and 2 meters per second (m/s) wind speed occur the entire year; and, that the receptor is exposed to radiation through consumption of contaminated food products, as well as by inhalation of, and submersion in, radioactive material. Therefore, the licensee adjusted its COMPLY result by multiplying the dose by a factor of 4, to incorporate a worst-case assumption that the wind blows in the direction of the receptor for the entire duration of an accidental release. The licensee did not adjust the result to account for the release duration, because assuming constant weather conditions and the same total amount of radioactive material released, the dose to a receptor is the same regardless of whether the material is released over one year or over a much shorter period. Additionally, the licensee conservatively assumed that during the one year release period, the most exposed member of the public consumes only potentially contaminated milk, vegetables, and meat from on-campus gardens and farms. The licensee's COMPLY calculation has input for building size parameters and release height such that the calculation would credit building wake effects and the elevated nature of the release, respectively. (The licensee used a stack height of 9 m (29.5 feet (ft)), and did not adjust the stack height higher to account for the upward momentum of the effluent air, as was done for the Ar-41 calculation discussed in SER Section 5.1.1.) The licensee assumed that the most exposed member of the public occupies (continuously, for the entire duration of the release) an outdoor location 10 m (32.8 ft) from the base of the UFTR stack, which is the distance from the base of the stack to the closest walking path in the unrestricted area.

The NRC staff reviewed the licensee's assumptions and calculation methodologies related to atmospheric dispersion, as discussed above. The NRC staff notes that the licensee used a calculation methodology that assumes average stability conditions and a wind speed of 2 m/s. The NRC staff notes that while assuming average stability may be reasonable and conservative for weather conditions averaged over an entire year, this weather condition may not represent the worst-case condition that would maximize the dose to a maximally-exposed member of the public, when a short-duration accident release is considered. (Given the free-air volume of the reactor cell, and the exhaust flow rate, if all of the radioactive material were instantaneously released to the reactor cell during the MHA, it would only take approximately 160 seconds for all of the material to be released to the environment.) Additionally, the NRC staff notes that when an elevated release is considered, the highest dose may not necessarily occur at the closest

unrestricted area; given the elevated nature of the release, the plume may have to travel some distance before reaching the ground, and the highest dose could occur at a location that is further away than the closest unrestricted area. Also, as discussed in SER Section 5.1.1, during certain weather conditions, releases from the UFTR stack may behave more similarly to a ground release than an elevated release. Therefore, in its confirmatory calculation of MHA doses to members of the public, which is discussed later in this section, the NRC staff conservatively assumed that the release occurs at ground level (i.e., no credit for the elevated release from the stack), and also conservatively assumed that stable (Pasquill E/F) atmospheric conditions occur for the entire duration of the release (for a ground release, stable atmospheric conditions always result in the highest doses). Similarly to the licensee's elevated release calculation, for its ground release calculation, the NRC staff assumed that the receptor is located 10 m (32.8 ft) from the base of the stack, because when a ground release is assumed, the dose always increases with decreasing distance from the release point. The NRC staff notes that although the licensee's assumption of a wind speed of 2 m/s is below the mean wind speeds measured near the reactor (2.81 m/s; as stated in SAR Table 11-2), stable (Pasquill E/F) atmospheric conditions are often associated with the lowest average wind speeds of any atmospheric condition. Therefore, in its confirmatory calculation of MHA doses to members of the public, the NRC staff also conservatively assumed a wind speed of 1 m/s. Lower wind speeds result in higher doses, except in some cases when effective stack heights are used. Although the licensee's Ar-41 calculations discussed in SER Section 5.1.1 use effective stack heights, the licensee's MHA calculation does not use effective stack heights.

Dose Calculations

The licensee calculated the potential MHA total effective dose equivalent (TEDE) and thyroid dose for an occupational worker inside the reactor cell, and calculated the public TEDE at the nearest normally occupied location outside the reactor building (a walking path 10 m (32.8 ft) from the base of the stack). For all dose calculations, the licensee assumed that all radionuclides released from the fuel, as discussed above, are released to the ambient air of the reactor cell and are instantaneously and uniformly distributed in the air of the cell. As discussed below, occupational workers are considered to be exposed to the contaminated air in the cell for a 5-minute period, at which point they evacuate the cell. Members of the public in the unrestricted air are exposed to contaminated air leaving the UFTR stack for the entire time it takes the plume of contaminated air to pass, and are also exposed to radiation shine through the reactor building walls. No credit for radioactive decay following the release from the fuel was taken for any of the dose calculations.

Occupational Dose Estimates

For the occupational dose calculations, the licensee assumed that radionuclides released from the fuel are instantly and uniformly distributed in the reactor cell, without leakage from the cell. This is a conservative assumption, because TS 3.5 (which is discussed later in this section) requires that the reactor cell ventilation system be operating during movement of the concrete shielding, and the ventilation system would direct radioactive material released from the fuel out of the exhaust stack, reducing exposures in the reactor cell and helping ensure that occupational doses are as low as reasonable achievable (ALARA). The reactor cell is assumed to have a free volume of 36,000 cubic ft (see TS 5.1.4, which also is discussed below). The licensee used the dose conversion factors (DCFs) from the Federal Guidance Reports (FGRs) Nos. 11 and 12 (Refs. 74 and 75). The licensee assumed that an evacuation time of 5 minutes is needed for the occupational workers. The occupational TEDE and thyroid dose calculated by the licensee are shown in Table 6-2 below.

The NRC staff reviewed the licensee's methodology and assumptions for determining the occupational doses, and finds that the methodology and assumptions are reasonable and conservative.

The NRC staff also performed an independent confirmatory analysis of the licensee's calculated occupational doses for the MHA. The NRC staff used the licensee-calculated data for the radionuclide inventories, and assumed no decay following the release from the fuel, consistent with the licensee's assumptions. The NRC staff also used the DCFs from FGR Nos. 11 and 12. Table 6-2 provides a comparison of the NRC staff- and licensee-calculated TEDE and thyroid doses. As shown in Table 6-2, the calculated TEDEs and thyroid doses are all well below the corresponding occupational dose limits in 10 CFR 20.1201, "Occupational dose limits for adults."

Table 6-2 MHA - 5-minute Occupational Dose Estimates in the Reactor Cell Area

Dose Category	UFTR-Calculated Dose	NRC Staff Confirmatory Calculation	10 CFR 20.1201 Occupational Dose Limits
TEDE (rem)	0.852	0.853	5
Thyroid (rem)	27.78	27.79	50

Public Dose Estimates

As stated above, for calculation of public doses from the MHA, the licensee assumed that the maximum public dose will be received by an individual located in the unrestricted area, 10 m (32.8 ft) from the UFTR stack, for the entire duration of the release. The licensee used the COMPLY code, and adjusted the results to make them more applicable for the accident conditions being evaluated. The licensee assumed that release occurs through the stack, took credit for building wake effects, and made other assumptions consistent with default settings and the methodology used by the COMPLY code, as discussed above. The licensee also made the assumption that 75 percent of radioiodines that are released to the reactor cell will plate out inside the reactor cell before they can enter the environment. The public dose calculated by the licensee is shown in Table 6-3 below.

The NRC staff reviewed the licensee's methodologies and assumptions for determining the public dose. As discussed above, the NRC staff noted that certain assumptions made by the licensee related to atmospheric dispersion may not be conservative. Therefore, in its confirmatory calculation of public doses from the MHA, which is discussed below, the NRC staff conservatively assumed that the release occurs at ground level, and also conservatively assumed that stable (Pasquill E/F) atmospheric conditions and a 1 m/s wind speed occur for the entire duration of the release.

The NRC staff also reviewed the licensee's assumption that 75 percent of radioiodines released from the fuel will plate out inside the reactor cell. The NRC staff reviewed Atomic Energy Commission Technical Information Document (TID) 14844, "The Calculations of Distance Factors for Power and Test Reactor Sites" (Ref. 81) and noted that although a reduction factor of two (i.e., 50 percent plate-out) is considered to be a conservative assumption to account for radioiodines that absorb onto internal surfaces of a reactor building instead of being released to the environment, it is estimated that removal of airborne radioiodines by various physical phenomena such as adsorption, adherence, and settling could give an effective reduction factor of 3 to 10 (i.e., 66.7 to 90 percent plate-out). The NRC staff notes that although the licensee's

assumption of 75 percent plate-out is greater than the conservative 50 percent plate-out assumption specified in TID-14844, the conditions at the UFTR would be favorable for radioiodine plate-out. Specifically, the UFTR typically operates at low fuel temperature (nominally below approximately 74 degrees Celsius (°C) (165 degrees Fahrenheit (°F)), as listed in SER Section 2.1.3, Table 2-2), and after the reactor is shutdown for 30 days (when the MHA is assumed to occur), the fuel will have cooled below this level. Given the low temperature of the reactor, any fuel damage accident occurring 30 days after the reactor is shutdown would also not be expected to raise the temperature of the air or internal surfaces in the reactor cell significantly above ambient temperature. Iodine is much less volatile at these low temperatures, compared to the temperatures at which power reactors typically operate. Therefore, the low temperature of the fuel, of any material released from the fuel, and in the air and surfaces of the reactor cell during the MHA would increase the amount of radioiodine that would be likely to plate out in the reactor cell following an MHA release. Additionally, the NRC staff notes that, as discussed above, the licensee assumed that 100 percent of radioiodines in the recoil range of the fuel would be released to the reactor cell, which is a conservative assumption because in actuality, much of these radioiodines would not be volatilized due to the low fuel temperature and would not be released from the fuel. Therefore, given the temperature conditions at the UFTR during the MHA, and given that the licensee made other conservative assumptions regarding the release of radioiodines from the fuel to the reactor cell, the NRC staff finds that the licensee's use of the assumption that 75 percent of the radioiodines released to the reactor cell will plate out in the reactor cell to be acceptable. In its confirmatory calculation, which is discussed below, the NRC staff also used this assumption.

The NRC staff performed an independent confirmatory analysis of the licensee's calculated public doses for the MHA. The NRC staff used the conservative assumptions discussed in the two paragraphs above. The NRC staff also used the licensee-calculated data for the radionuclide inventories, and assumed no decay following the release from the fuel, consistent with the licensee's assumptions. The NRC staff used the DCFs from FGR Nos. 11 and 12 (Refs. 74 and 75). The NRC staff's calculation took credit for building wake effects and plume meander using the guidance and methodology in Regulatory Guide 1.145, "Atmospheric Dispersion Models for Potential Accident Consequence Assessments at Nuclear Power Plants," (Ref. 73). The NRC staff used Briggs lateral and vertical dispersion coefficients for urban conditions (see SER Section 5.1.1), for the location 10 m (32.8 ft) from the base of the stack. Although Briggs dispersion coefficients estimated for open country or urban conditions are typically applied for dispersion calculations for distances between 100 m (328 ft) and 10,000 m (32,800 ft) from the release point, the NRC staff used the Briggs formulas to provide an estimate of dispersion coefficients for 10 m (32.8 ft) from the release point. This estimation is conservative because it greatly underestimates the extent to which the released radionuclides would realistically be diluted at the location 10 m (32.8 ft) from the stack, or at any other publicly-accessible location outside the reactor building. Doses from consumption of contaminated food products, which the licensee included in its calculations, were not considered in the NRC staff calculation because consumption of contaminated food products is not expected to contribute significantly to the dose to the maximally-exposed member of the public. Table 6-3 provides a comparison of the NRC staff- and licensee-calculated public doses. As shown in Table 6-3, the calculated doses are both below the 100 mrem public dose limit in 10 CFR 20.1301, "Dose limits for individual members of the public."

Table 6-3 MHA - Maximum Postulated Public Dose Estimates

Dose Category	UFTR-Calculated Dose	NRC Staff Confirmatory Calculation	10 CFR 20.1301 Public Dose Limit
TEDE (mrem)	29.2	87.6	100

The licensee and NRC calculations are based on the assumption that the reactor is continuously operated at 100 kWt steady-state power for 30 days (72,000 kW-hrs), followed by 30 days of decay, when the MHA occurs. As discussed above, the NRC staff notes that the inventory of certain isotopes would not have reached saturation after 30 days of operation. In particular, the saturation inventory of I-131, which is a significant contributor to the total dose, would be approximately 6.5 percent greater than the I-131 inventory assumed. Therefore, since there is no limit on operation time in the UFTR license, and the reactor could potentially operate for a long enough period of time such that I-131 would reach saturation, the NRC staff evaluated the public dose assuming a 6.5 percent increase in the I-131 inventory. Keeping all assumptions except for the I-131 inventory the same as the assumptions used for its confirmatory calculation above, the NRC staff calculated that this public dose would be 93.3 mrem, still below the 100 mrem public dose limit in 10 CFR 20.1301.

The licensee's calculations did not include an estimate of the dose at the nearest residence to the facility, which is a residence hall located approximately 600 ft (183 m) due west of the reactor building. The NRC staff notes that given the assumptions used for the NRC confirmatory calculation (particularly the ground release assumption), the dose at the nearest residence would be bounded by the dose 10 m (32.8 ft) from the release point, because the nearest residence is further away. However, to show how the dose at the nearest residence would compare to the dose 10 m (32.8 ft) from the release point, the NRC staff performed a calculation of the MHA dose at the nearest residence (except for the receptor location, the parameters and assumptions are the same as those used for the confirmatory calculation discussed above). The NRC staff calculated that the public MHA dose at the nearest residence would be 0.27 mrem.

The licensee also performed a calculation of the radiation shine through the reactor building structure due to the gaseous fission products (radioiodines and noble gases) released to the reactor cell, since this radiation shine could also be a source of radiation exposure to members of the public. This calculation represents a condition where the reactor cell is isolated, with none of the material released through the stack or otherwise leaking from the reactor cell. The licensee's calculations of shine from the reactor building during an MHA used the computer program MicroShield 9.07, which is a comprehensive photon/gamma ray shielding and dose assessment program that is widely used for designing radiation shields. The source inventory for this calculation is the radioiodines and noble gases released from the fuel to the reactor cell. No credit is taken for decay. The licensee calculated dose rates at the wall outside surface, and at a distance of 10 ft (3.04 m) from the wall, assuming that the wall is a 12 inches (30.5 cm) thick ordinary concrete wall. The licensee provided its MicroShield outputs (for both the MHA and FHA) (Ref. 83). The dose rates calculated by the licensee for the MHA are shown in Table 6-4 below. The NRC staff reviewed the licensee's MicroShield outputs for the MHA and FHA (Ref. 83), and the MHA and FHA shine dose rates listed in SAR Section 13.2.1.2.4 (Ref. 26), and notes that the dose rates listed in the SAR are based on the exposure rates output by MicroShield, which differ from the absorbed dose rates calculated by MicroShield. Because absorbed dose rates better represent the dose rate to humans potentially standing at the locations considered in the calculation, the licensee-calculated dose rates listed in Table 6-4

below, and in corresponding Table 6-7 of SER Section 6.5 for the FHA dose rates, are based on the absorbed dose rate values taken from the licensee's MicroShield outputs.

The NRC staff performed an independent confirmatory calculation of the dose rate to an individual 10 ft (3.04 m) from the reactor wall. Similarly to the licensee's calculations, the NRC calculations assumed that no material leaks from the reactor cell and took no credit for radioactive decay, but did take credit for the shielding provided by the 12 inches (30.5 cm) thick concrete wall. Furthermore, the NRC staff calculations assumed the building can be represented by a point source with the radiation emitted uniformly in all directions, and each disintegration is accompanied by one 1-MeV photon (gamma ray). The NRC staff's calculation uses a very simple equation, and is only an approximate method, which does not account for decay energy distributions (i.e., most of the decay photons released will have energies less than 1 MeV, and therefore will result in lower doses) or the attenuation of radiation in air. Therefore the NRC staff calculation is conservative. Table 6-4 provides a comparison of the NRC staff- and licensee-calculated direct radiation dose rates.

Assuming no decay or leakage from the reactor cell, the calculated dose rates will remain constant for the duration of the time that an individual remained at the specified location outside the reactor building. The UFTR Emergency Plan (Ref. 59) states that following the FHA (see SER Section 6.5), there would be no need for evacuation of areas outside the reactor building, given that the calculated public doses and dose rates outside the building are low. Since the MHA is not considered to be a credible accident at the UFTR, the licensee uses the FHA, rather than the MHA, as its basis for emergency planning. The NRC staff notes that, given the MHA shine dose rates in Table 6-4, a member of the public located 10 ft (3.04 m) from the reactor wall could remain at that location approximately 298 days (based on the licensee's dose rate estimate) or 17 days (based on the NRC staff dose rate estimate) before the 100 mrem public dose limit in 10 CFR 20.1301 would be exceeded. However, these stay times are based on extremely conservative dose rate estimates. As discussed above, the dose rates are calculated assuming the ventilation system remains off, and no material decays or leaks from the reactor cell during an entire year. (TS 3.5, which is discussed later in this section, requires the ventilation system to be operating during movement of shielding removing the source term from the confinement in about 160 seconds. Additionally, maintaining the ventilation system operating during an accident such as the MHA would be consistent with ALARA principles and the ventilation system would lower radioactive material concentrations in the reactor cell, helping to reduce occupational doses and any shine dose to members of the public outside the building. The ventilation system would also help dilute and disperse radioactive material leaving the reactor building; this would also help reduce doses to members of the public, because members of the public could be exposed to higher doses if air containing higher concentrations of radioactive material was allowed to leak directly from the reactor cell to the environment. Even with the ventilation system off, the airborne radioactive material would leak from the confinement eliminating the source term because the confinement is not leak proof.) The NRC staff's estimate makes additional conservative assumptions, which are also discussed above.

The NRC staff notes that publicly-accessible locations near the reactor building are areas on the University of Florida campus, and are therefore under control of the licensee. Although the MHA is not considered to be a credible accident, the NRC staff expects that if such an accident were to occur, the licensee would control access to areas near the reactor building as needed, helping to ensure that public doses from any radioactive material in the reactor cell would remain below the 100 mrem public dose limit in 10 CFR 20.1301.

Table 6-4 MHA - Maximum Radiation Shine through the Reactor Building

Parameters	UFTR-Calculated Dose Rate	NRC Staff Confirmatory Calculation
Dose rate at the surface of the reactor wall (mrem/hr)	0.019	--
Dose rate at 10 feet from the reactor wall (mrem/hr)	0.014	0.251

The NRC staff reviewed the licensee's MHA scenario and dose calculations. The NRC staff finds that the MHA scenario represents an accident that can reasonably be considered to bound any credible accident at the UFTR. The NRC staff finds that the methodologies and assumptions used by the licensee to evaluate the MHA are reasonable, conservative, and consistent with established industry practices, except as noted above. As discussed above, the NRC staff also performed independent confirmatory calculations of the occupational and public doses from the MHA. The NRC staff finds, based on its review of the licensee's dose calculations, and the results of the NRC staff confirmatory calculations, that the MHA results demonstrate that the maximum MHA doses are below the occupational dose limits in 10 CFR 20.1201 and the public dose limit in 10 CFR 20.1301. Therefore, based on the information above, the NRC staff concludes that the results of the UFTR MHA are acceptable.

6.2 Reactivity Insertion Transients

Licensees are requested to evaluate the impacts of reactivity insertion transients on the reactor focusing on the potential for fuel damage. Two categories of reactivity insertion transients should be considered for evaluation: prompt reactivity insertions and ramp reactivity insertions. Prompt reactivity insertions can result from the unplanned movement of experiments. The licensee's TS 3.8 limits the reactivity worth of any single moveable experiments to an absolute value of 720 percent millirho (pcm) and to an absolute value of 1,400 pcm on all experiments. For ramp insertions reactivity, it is assumed that the control blades add reactivity at the limit in TS 3.2.1.2 of 74 pcm/second. The maximum reactivity available for reactivity insertion transients is the excess reactivity in the reactor core. TS 3.1.2 limits excess reactivity to 1,480 pcm. The definition of excess reactivity in TS 1.2 states that no credit is taken for negative experiment worth, temperature effects or xenon poisoning when determining excess reactivity.

In SAR Section 13.2.2 (Ref. 26), the licensee presents a reactivity insertion transient analysis that postulates abnormal events where the operator violates procedures, an uncontrolled rod withdrawal (URW) event occurs, or some other event, such as an experiment failure, transpires that results in an reactivity insertion transient. The licensee states that the purpose of this analysis is to demonstrate that anticipated reactivity insertion events (such as those that could potentially occur due to an uncontrolled withdrawal of a control blade resulting from a control blade drive malfunction) will not result in power excursions that violate the UFTR safety limit (SL). The UFTR SL is provided in TS 2.1, which states that the fuel and cladding temperatures shall not exceed 986 °F (530 °C). TS 2.1 is discussed and found acceptable in SER Section 2.2.1.

The Reactor Excursion and Leak Analysis Program (RELAP5-3D), developed by the Idaho National Laboratory, and the Program for the Analysis of Reactor Transients (PARET), developed by the Argonne National Laboratory (ANL) are simulation tools that allows users to model various operational transients and postulated accidents that might occur in a nuclear reactor. The licensee analyzed reactivity insertions transients with RELAP5-3D and PARET using reactivity feedback coefficients calculated from Monte Carlo N Particle code (MCNP)

analyses. Two categories of reactivity insertion events were analyzed: a reactivity insertion limit for moving experiments when the reactor is not shut down, and a reactivity insertion due to withdrawing control blades from the reactor. The UFTR SAR, Section 13.2.2 documents a large number of calculations, with and without the reactor protection system providing a protective action (reactor scram), to cover the range of possible reactivity insertion transients. The calculations vary initial power, coolant flow rate, coolant temperature, total reactivity inserted, and the reactivity insertion rate. The UFTR SAR refers to all of the reactivity insertion transients as an URW.

The NRC staff used the TRAC/RELAP Advanced Computational Engine (TRACE) computer code to perform an independent analysis of the UFTR reactivity insertion transients using the feedback coefficients and reactivity from the UFTR SAR. The TRACE model of the UFTR facility used in the calculations includes a reactor control blade scram, opening of the reactor dump valve, and opening of the reactor rupture disc, which drains the primary coolant into the reactor cell equipment pit if the primary system pressure increases by 2 pounds per square inch gauge (psig) over normal system operating pressure. The licensee did not model the rupture disc in the URW analysis, but the NRC staff's model includes the rupture disc to evaluate for actual and potential thermal effects on reactor components and the reactor coolant. The NRC staff calculations also used a minimum film boiling temperature of 225 °C that is appropriate for aluminum cladding (Ref. 86), which is not included in the licensee's calculations (refer to the discussion in Section 6.2.2 of this SER).

6.2.1 Maximum Prompt Reactivity Addition

The limits on the reactivity worth of experiments established by TS 3.8.1 (which are discussed and found acceptable in SER Section 2.3) is analyzed as part of the licensee's reactivity insertion transient analysis. Limits of 720 pcm for the absolute value of a single moveable experiment and 1,400 pcm for the sum of the absolute values of all experiments are placed on experiment reactivity worth to help ensure that the insertion or removal of an experiment from the core region does not cause a SL violation. The licensee states that the limits in TS 3.8.1 help ensure that any reactivity excursion that could result from the failure of an experiment would be bounded by the analyses of reactivity excursions related to URWs presented in the SAR Chapter 13.2.2 analyses. The NRC staff notes that the licensee analyzed a fast reactivity insertion of 1,480 pcm which represents the maximum excess reactivity allowed in the reactor and bounds the total experiment limit of 1,400 pcm for the simultaneous failure of multiple moveable experiments. Therefore, the NRC staff finds that the licensee's analysis helps to provide the basis for TS 3.1.2 and TS 3.8.1.

Additionally, in Section 13.2.2.1 of the SAR, the licensee states that more restrictive limits are placed on moveable experiments in the UFTR procedures than in the TSs to prevent insertion or removal of an experiment from the core region unless all control blades are inserted or its absolute reactivity worth is less than that which would cause a positive 20-second stable reactor period when the reactor is operating. This is stated to correspond to a reactivity insertion of approximately 250 pcm.

The NRC staff performed independent calculations with rapid insertions of 250 pcm (based on the procedural limit stated by licensee) and 720 pcm over 0.25 seconds (for the TS 3.8.1.1 limit) from initial low power (0.01 Wt) and full power (100 kWt) operating conditions. The 720 pcm over 0.25 seconds calculation results in a short period trip or a high power trip depending on initial power level. In addition, the NRC staff's independent calculations confirm that, for both of these scenarios, there is no unacceptable power excursion, heat up of the fuel, or failure of the

rupture disc even if no scram occurs. The 250 pcm insertion will eventually scram on high power.

The NRC staff also performed a calculation with a reactivity insertion of 1,480 pcm in 0.5 seconds with and without reactor scram, based on the TS 3.8.1.2 limit. The reactor scram is assumed to occur at the 2 second delay for rod drop time in TS 3.2.1. However, because the transient occurs over a short period of time, the transient is terminated by the heat up of the fuel and moderator which adds negative reactivity to the reactor. The reactor scram occurs after the transient peak and serves to prevent subsequent transients. Both calculations, with and without scram, result in a significant fuel heatup and a breakage of the rupture disc. Because the transient occurs in a very short period of time, with or without scram, the NRC staff calculates a peak power of approximately 190 megawatts thermal (MWt) and a peak clad temperature of approximately 473 °C, which is below the SL fuel temperature of 530 °C. The licensee's calculated peak power level and maximum fuel temperatures are similar.

The NRC staff finds that the licensee's analyses of prompt reactivity insertions demonstrate that the prompt reactivity insertions associated with experiment failures would not cause the SL to be exceeded. However, some prompt reactivity insertions can result in the rupture disc failing. Although the loss of primary coolant contributes significant negative reactivity to the reactor core, the NRC staff considers the breakage of the rupture disc to be an abnormal event that should not be considered normal operation.

6.2.2 Maximum Reactivity Ramp Rate

The licensee's analysis in SAR Section 13.2.2 postulates an abnormal event where a single control blade is withdrawn in an uncontrolled manner. The analysis of the UFTR uses the coupled reactor kinetics-hydraulics codes, RELAP5-3D and PARET/ANL. The analysis was performed for transients with and without a reactor protection system (RPS) actuation (scram) for the limiting core configuration (LCC), which is the a 22-assembly core configuration (see SER Section 2.6.3), evaluated at both Beginning-of-Life (BOL) and End-of-Life (EOL) conditions. The reactor kinetics parameters, feedback coefficients, and power profiles used in the analysis are listed in Chapter 4 of the UFTR SAR (SAR Tables 4-3 and 4-9) for BOL and EOL (Ref. 27).

The licensee used RELAP5-3D that has a multichannel thermal-hydraulic solution capability that is coupled to a point kinetics neutronics model. In the UFTR model, several kinetics parameters are provided from the MCNP LCC model. They include β_{eff}, the prompt neutron lifetime, and the reactivity feedback coefficients. RELAP5-3D has been used for a wide variety of analyses of research and test reactors. The NRC staff finds that, although there is uncertainty in the results for large rapid reactivity insertions, RELAP5-3D is appropriate for demonstrating that the fuel temperature SL is not exceeded for the reactivity ramp analyses if the peak temperatures do not exceed the minimum film boiling temperature of 225 °C for aluminum. The use of the LCC derived parameters is also appropriate. The licensee also performs calculations with the PARET-ANL code which has limitations in minimum film boiling temperature similar to RELAP5-3D. However, as noted previously, the NRC staff considers any reactivity insertion transient that blows out the rupture disc to be an abnormal event that should not be considered normal operation.

Ramp Reactivity Insertion with No Reactor Scram

The licensee analyzed ramp reactivity insertion without a reactor scram in SAR Section 13.2.2.2. The NRC staff notes that this assumption would require multiple failures of the RPS. The licensee performed this analysis as a conservative bounding calculation. For the no-scram cases analyzed by the licensee, the reactivity is inserted and power is allowed to rise unchecked until the reactivity feedback from the fuel temperature increase and the coolant density decrease cause a stable, but higher, reactor power to be established. For the 32 cases analyzed with no scram, the limiting case, in terms of the UFTR SL, is the case in which the core is at EOL, initial reactor power is 0.01 Wt, coolant flow rate is 50 gallons per minute, coolant inlet temperature is 60 °F, and there is a total reactivity insertion of 1,480 pcm inserted at a rate of 74 pcm/s over 20 seconds (SAR Table 13.10, Case 30). For this case, the peak reactor total power is approximately 9.8 MWt, and the peak fuel temperature is approximately 377 °F (192 °C). This temperature is substantially less than the SL, which is 986 °F (530 °C).

The NRC staff notes that the RELAP5-3D code used by the licensee does not have a minimum film boiling temperature model that is appropriate for aluminum clad fuel. The minimum film boiling temperature for polished aluminum wiped clean of surface contamination in water is reported to be as low as 160 °C (Ref. 86). The temperature for polished aluminum with surface contamination is approximately 225 °C and is more representative of fuel in a reactor. This value is conservative for UFTR calculations because of an oxide layer on the cladding surface, as described in Section 2.2.1 of this SER, which would increase this value to higher temperatures. The effective minimum film boiling temperature calculated by RELAP5 is determined by an empirical correlation for transition boiling that was developed to be representative of power reactors. The correlation is based on data that is out of the range of conditions for the UFTR calculations. Therefore, calculations with peak cladding temperatures that exceed the minimum film boiling temperature for aluminum (approximately 225 °C) may not be valid. The UFTR model also does not include the rupture disc system in the reactor model. Because of the model limitations, the NRC staff finds that the licensee's analyses of large ramp reactivity insertions with no reactor scram using RELAP5-3D and PARET-ANL may not have given reliable results. Because of this, the NRC staff performed calculations with a model that included the rupture disc.

The NRC staff calculations showed that a large ramp reactivity insertion without scram can lead to the coolant system pressure exceeding the rupture disc pressure. The NRC staff calculations also resulted in fuel clad temperatures that exceed the UFTR licensee calculated results and were above the minimum film boiling temperature for aluminum. Although the NRC staff believes that the fuel temperature will remain below the SL, due to the uncertainty in the computational model at the temperatures observed in the NRC staff's results, the NRC staff cannot conclude with reasonable assurance that the licensee's large ramp reactivity insertion without scram results are acceptable. The constraints on the model were exceeded because the licensee's scenario contains significant conservatisms with the assumption of no reactor scram. Therefore, the NRC staff concludes that the ramp analysis with reactor scram, discussed below, has greater validity.

Ramp Analysis with Reactor Scram

For the licensee's cases that assume a reactor scram (SAR Tables 13 11 and 13-12), the reactivity is inserted and reactor power is allowed to rise. Once either the high power trip setpoint or the fast period trip setpoint are reached, a reactor scram occurs. Although TS 3.2.2 requires that the high power trip setpoint be no greater than 110 percent of licensed reactor

power (i.e., 110 kWt) and that the reactor period scram be no less than 3 seconds, the licensee conservatively assumed that these scram channels would not cause a scram to occur until reactor power reached 120 kWt or reactor period reached 1 second. The licensee also conservatively assumed that once the reactor scram occurs, the four scrammable blades insert within 3 seconds, which is more conservative than the 2 seconds allowed by TS 3.2.1. The reactivity of the blades (as calculated by MCNP) is then used to terminate the event by shutting down the reactor. (In addition to the reactor scram, the feedback from the fuel temperature increase and the coolant density decrease associated with the power rise also contribute negative reactivity that limits the maximum power rise.) Credit was taken for the short period and high power RPS trips in these calculations at the conservative trip setpoints and delay time described above. The results of the licensee's calculations show that the SL is not exceeded.

The NRC staff performed a range of confirmatory calculations to evaluate the licensee's analysis. TS 3.2.1.2 limits the reactivity insertion rate due to control blade withdrawal to a maximum of 74 pcm/second. The NRC staff's calculations show that 74 pcm/s insertion rate for 10 seconds without a RPS trip does not have an unacceptable fuel heat up, but reaches the rupture disc breaking pressure of 2 psig for calculations starting from either 0.01 Wt or 100 kWt. The NRC staff calculations of 74 pcm/s ramp from 0.01 Wt up to a total of 1,480 pcm require the period trip to prevent rupture disc breakage (in the case without a period trip, a high power trip would occur but negative reactivity from the increase in temperature of the fuel and the reactor coolant would have already turned the reactor transient). Even if a rupture disc break occurs, the fuel clad temperature stays well below the SL. The NRC staff calculations result in a peak temperatures of less than 240 °C. Sensitivity calculations performed by the NRC staff showed that the reactivity insertion rate needs to be limited to 20 pcm/s to avoid rupture disc breakage starting from 0.01 Wt without the period trip. Even though the SL for the fuel is not exceeded, scenarios where the rupture disc fails are considered by the NRC staff to be abnormal occurrences that should be avoided.

The NRC staff finds that the licensee's analyses of ramp reactivity insertions with reactor scram demonstrate that the reactivity insertions associated with potential uncontrolled rod withdrawals would not cause the SL to be exceeded. The NRC staff also finds that the licensee's analyses of reactivity insertions with scram are performed using appropriate conservative assumptions and methods.

6.2.3 Conclusion for Reactivity Insertion Analysis

The NRC staff reviewed the licensee's analyses of various prompt and ramp reactivity insertion transients as described in the SAR, as supplemented, and also performed independent confirmatory calculations, discussed above, to verify the licensee's analysis and proposed TS limits.

The NRC staff finds that for prompt reactivity insertions of 250 pcm and 720 pcm there is no unacceptable power excursion, heat up of the fuel, or failure of the rupture disc even if no scram occurs. For prompt reactivity insertions of 1,480 pcm, fuel heat up remains below the SL, but results in failure of the rupture disc. The NRC staff notes that a prompt reactivity addition of 1,480 pcm equals the limit on excess reactivity and would require more reactivity than the simultaneous failure of all allowed experiments (1,400 pcm).

Because of limitations in the models used by the licensee and the NRC staff, the NRC staff could not confirm the licensee's results for the conservative ramp reactivity insertion without scram scenario.

The NRC staff finds that the ramp reactivity insertion with scram is a more realistic scenario than the analysis without scram. The NRC staff finds that, in general, the licensee's ramp reactivity insertion with scram analyses used acceptable methods, and used reasonable and conservative assumptions and inputs that support the limits proposed in the TSs. The NRC staff examined a number of reactivity ramp scenarios and finds that potential reactivity insertion events that could occur at the UFTR would not cause the UFTR SL to be exceeded. Some scenarios with failure of the period scram (but initiation of the high power scram) could lead to failure of the rupture disc, which is considered by the NRC staff to be an abnormal occurrence. However, this would require both the failure that leads to the ramp insertion and the failure of the period scram, which is a conservative scenario. Therefore, based on the information above, the NRC staff concludes that the results of the licensee's reactivity insertion transient analysis are acceptable.

6.3 Loss-of-Coolant Accident

As discussed in SAR Section 13.2.1.1, the primary water is often drained from the core immediately after reactor shutdown. Therefore, the UFTR reactor is designed to withstand a loss of coolant without damage to the fuel or cladding, because the core is routinely uncovered during normal operations. However, an analysis of the potential for fuel damage following a LOCA at the UFTR reactor is still included here for completeness. The guidance in NUREG-1537 recommends that potential doses to reactor staff and/or members of the public from the unshielded (due to the loss of the coolant water) core be evaluated as part of a LOCA accident analysis. However, given that the reactor structure is designed such that the coolant water is not a significant part of the core shielding and the core remains adequately shielded when the primary water is drained, the NRC staff finds that an evaluation of the accident doses from a LOCA at the UFTR reactor is not necessary.

The licensee describes LOCAs in SAR Section 13.2.3. The licensee discusses a previous analysis of a hypothetical high-enriched uranium (HEU) core that had operated in equilibrium with reactor power of 625 kWt (average power per plate of 4 kWt) before experiencing a LOCA. The licensee states that this analysis showed that the decay heat after reactor shutdown would cause a temperature rise of only about 26 °F (14 °C) in the hottest fuel assembly of the core. In addition, the licensee states that these operating conditions for the HEU core analyzed are far in excess of any feasible operating condition of the UFTR's current low enriched uranium core. In its response to RAI 5 (Ref. 24), the licensee states that the maximum fuel temperature at limiting safety system settings conditions is 98.7 °C; a 14 °C increase that corresponds to a potential temperature change to 112.7 °C, which is well below the SL for the UFTR. Therefore, the temperature of the UFTR core would remain well below the SL following any temperature rise associated with a LOCA, showing that a LOCA would not have the potential to cause fuel or cladding damage.

The NRC staff performed a confirmatory calculation to verify the results of the licensee's LOCA analysis. The NRC staff analyzed this event using the TRACE model shown in Figure 2-9 in SER Section 2.7. In this simulation, the break size is 1/6 of the flow area of the dump valve (3 inches), since the TRACE model considers only one of the six fuel boxes as the hot fuel box. The simulation runs for 100 seconds at full power to establish the steady state conditions. The decay heat generated by the core is based on the SAR analysis. At 100 seconds, the pump shuts off, the dump valve fully opens, and the vacuum breaker opens, allowing water flow through the dump valve and air entry into the reactor. The reactor is assumed to scram, with the rods inserting during the 2 seconds following the opening of the dump valve. The NRC staff

notes that even if the reactor did not scram, the complete draining of water, which is also the moderator, from the UFTR core would shut down the reactor, due to the large insertion of negative reactivity.

In its response to RAI 7.b (Ref. 24), the licensee stated that the time to drain the core following opening of the dump valve is approximately 12 seconds. The NRC staff finds that this drain time is a reasonable assumption for any LOCA event, given the core geometry. In confirmatory calculations, the NRC staff assumed that after the valve opens, the water drains in 12 seconds, at atmospheric conditions. Heat structures are used to model the heat transfer to the graphite moderator elements surrounding the fuel boxes, since these elements absorb some of the decay heat. The highest fuel and cladding temperature predicted by the TRACE is 139 °C, near the bottom of the fuel plate. As the scenario continues, the water drains through the dump valve and water drain line, while the same volume of air comes into the fuel boxes through the vacuum breaker vent lines connected at the top of the fuel boxes.

The water level in the core and the fuel-cladding temperature at the top and bottom of the fuel, as a function of time, are shown in Figure 6-1 and Figure 6-2. As Figure 6-2 indicates, the fuel temperature rises to about 140 °C. This is well below the 530 °C SL for the UFTR. Therefore, the NRC staff finds that the temperature rise associated with either a LOCA event, or a full scram that includes a water dump, is controlled by air cooling of the fuel. The analyses show that the peak fuel temperature will not exceed the SL.

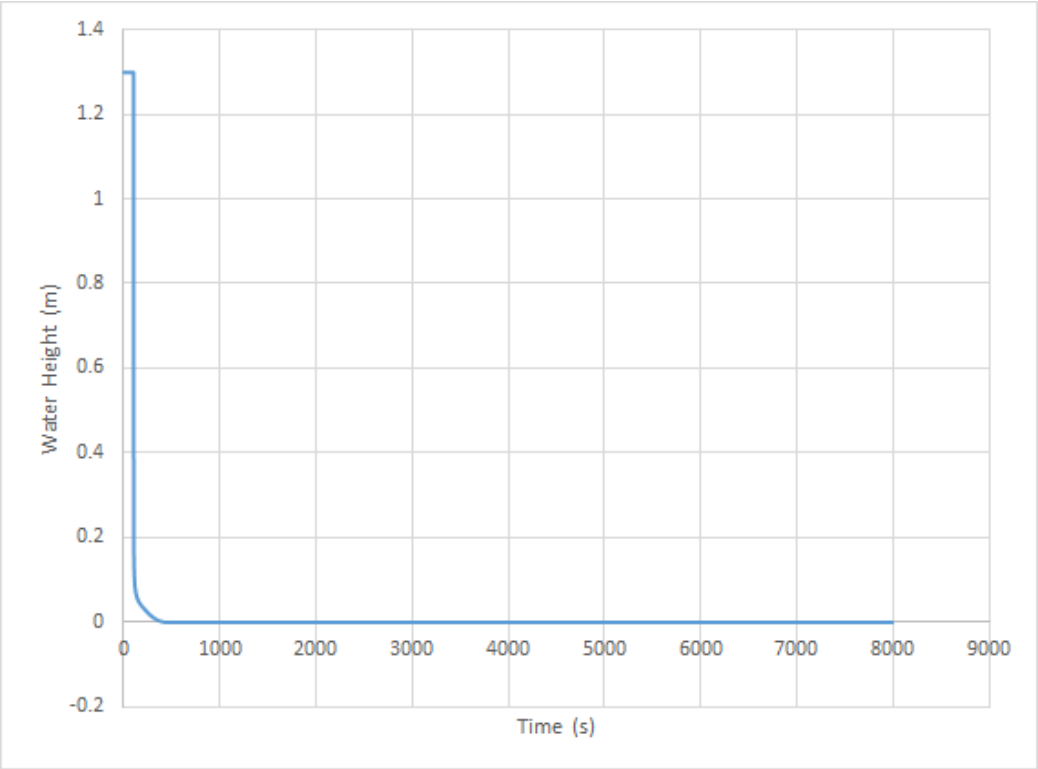

Figure 6-1 LOCA Water Level in the Fuel Box

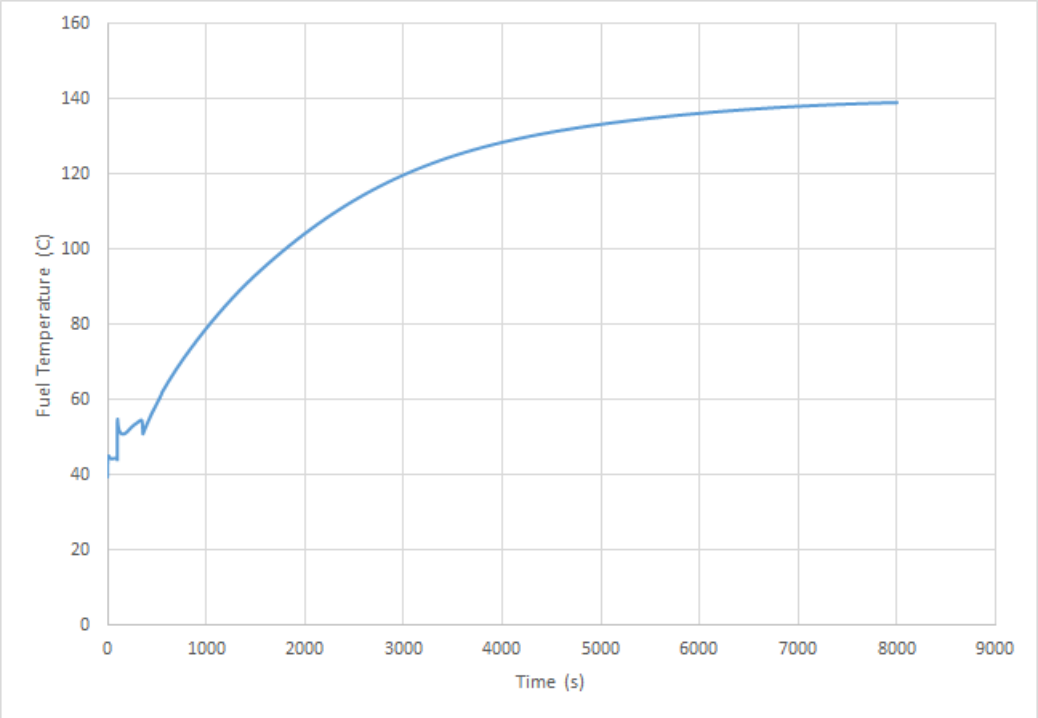

Figure 6-2 LOCA Fuel Temperature Behavior

The NRC staff reviewed the information provided by the licensee, and also performed confirmatory calculations, as discussed above, to verify the licensee's analysis. The NRC staff finds that the licensee and NRC analyses demonstrate that if a LOCA were to occur, it would not result in damage to the cladding or the fuel. Therefore, based on the information above, the NRC staff concludes that the results of the LOCA analyses are acceptable.

6.4 Loss of Flow Accident

In SAR Section 13.2.3.1, the licensee states that a loss-of-flow accident, in its most severe case, would lead to a LOCA. Therefore, its consequences are bounded by the LOCA analysis.

The NRC staff reviewed the information in the SAR related to a loss-of-flow and its impact on the reactor operation (reactor trip). In SAR Section 7.1.3.2.1, the licensee states that a primary coolant flow monitor sensor located in the primary fill line trips the reactor if the flow rate drops below the set point. In addition, a float switch activates a reactor trip if the water level in the core is below the pre-set limit. When the reactor trips, the solenoid-operated dump valve opens, allowing the water in the fuel box to drain into the coolant storage tank. This sequence of events and results are similar to a LOCA, evaluated and found acceptable in Section 6.3 of this SER. Therefore, based on the information above, the NRC staff concludes that the consequences of a loss-of-flow accident at the UFTR are bounded by those of a LOCA, and are acceptable.

6.5 Mishandling or Malfunction of Fuel Accident

The licensee described and analyzed the fuel FHA as part of its MHA discussion provided in SAR Section 13.2.1, as supplemented (Ref. 26 and Ref. 83). The licensee considers the FHA

(which is similar to the UFTR MHA in that it involves fuel damage to the highest-power assembly resulting in a release of radioactive material, but the damage occurs due to fuel mishandling, rather than due to a core crushing event) to be the most limiting credible accident for the UFTR, and therefore, it considers the FHA to be the accident that is the basis for emergency planning purposes. The FHA scenario assumes that one irradiated fuel assembly is damaged during core manipulations (fuel offload, reload, inspection, or other handing activities). For the MHA, the damage to the fuel was assumed to be equal to stripping the cladding off of one face of all 14 fuel plates of one fuel assembly; for the FHA, it is assumed that the damage is equal to stripping the cladding from one face of a single fuel plate in one assembly. Consistent with the MHA analysis assumption, for the FHA scenario, the licensee assumed that 100 percent of the radioiodines and noble gases that are produced within the recoil range of the fission fragments (about 1.37×10^{-3} cm) on the exposed fuel surface area will be released to the reactor cell. Following the approach used for the MHA and discussed in SER Section 6.1, the licensee calculated an FHA release fraction of 0.192 percent of the fission product inventory in the highest-power assembly, compared to 2.69 percent for the MHA. This is the only parameter change from those discussed under the MHA; therefore, the FHA is bounded by the MHA.

The NRC staff reviewed the licensee's assumptions for the FHA analysis, and finds that the FHA scenario is conservative, given that any damage to the assembly from fuel mishandling would likely be on the outer plates, with only minor scratches or rips/tears in the cladding. The NRC staff also verified the licensee's calculated release fraction of 0.192 percent and finds the licensee’s release fraction acceptable.

The licensee's dose calculations for the FHA followed the same methodologies and assumptions regarding radionuclide inventories, weather conditions, stay times, iodine plate-out in the reactor cell, dose conversion factors, etc., that were used for the MHA analysis. The only difference was the release fraction for the FHA, which is lower than the MHA release factor by a factor of 14. TS 3.5 (see SER Section 6.1) requires that the reactor cell ventilation systems be operating during fuel movement; therefore, these systems would be operating during the FHA, as they would be during the MHA. For the FHA calculations of public dose from material released from the reactor building, the licensee assumed that the ventilation system would be operating, similar to the MHA. Also similar to the MHA, for the FHA occupational dose calculations and the FHA calculations of external dose outside the reactor building from material in the reactor cell, the licensee conservatively assumed that the ventilation system would not be operating.

The NRC staff performed confirmatory dose calculations for the FHA. The NRC staff’s FHA calculations also used similar approaches and assumptions to those described in the NRC confirmatory calculations for the MHA, except for the release fraction. Therefore, the discussion below focuses on the estimated occupational and public doses for the FHA.

Occupational Dose Estimates

Table 6-5 provides a comparison of the licensee- and NRC staff-calculated occupational TEDE and thyroid doses for the FHA. The results in Table 6-5 show that the estimated occupational TEDEs and thyroid doses are well below the applicable regulatory dose limits in 10 CFR 20.1201, and are bounded by the occupational doses for the MHA.

Table 6-5 FHA - 5-minute Occupational Dose Estimates in the Reactor Cell Area

Dose Category	UFTR-Calculated Dose	NRC Staff Confirmatory Calculation	10 CFR 20.1201 Occupational Dose Limits
TEDE (rem)	0.061	0.061	5
Thyroid (rem)	1.99	1.99	50

Public Dose Estimates

Table 6-6 provides a comparison of the licensee- and NRC staff-calculated public doses to an individual located 10 m (32.8 ft) downwind of the stack during the FHA. As shown in Table 6-6, the calculated doses are both well below the 100 mrem public dose limit in 10 CFR 20.1301, and are also bounded by the public doses for the MHA.

Table 6-6 FHA - Maximum Postulated Public Dose Estimates

Dose Category	UFTR-Calculated Dose	NRC Staff Confirmatory Calculation	10 CFR 20.1301 Public Dose Limit
TEDE (mrem)	2.0	6.3	100

Table 6-7 provides a comparison of the licensee- and NRC staff-calculated public external dose rates outside the reactor building from radioactive material released from the fuel to the reactor cell during the FHA. The licensee-calculated values in Table 6-7 are based on the absorbed dose rates taken directly from the licensee's MicroShield output, rather than from SAR Section 13.2.1.2.4 (discussed in SER Section 6.1.) Assuming no decay or leakage from the reactor cell, the licensee states that the calculated dose rates will remain constant for the duration of the time that an individual remained at the specified location outside the reactor building. As stated above, the licensee considers the FHA to be the most limiting credible accident for the UFTR, and, therefore, the FHA is the basis for the emergency planning at the UFTR. The UFTR Emergency Plan (Ref. 59) states that following the FHA, there would be no need for evacuation of areas outside the reactor building, given that the calculated public doses and dose rates outside the building are low. The NRC staff notes that if an individual located 10 ft (3.04 m) from the reactor wall were exposed to the dose rates in Table 6-7 for an entire year, the total dose would be 8.8 mrem (based on the licensee's dose rate estimate) or 158 mrem (based on the NRC staff dose rate estimate).

As discussed above, licensee- and NRC staff-calculated doses assume the ventilation system remains off, and no material decays or leaks from the reactor cell during an entire year. TS 3.5, which is discussed in SER Section 6.1, requires the ventilation system to be operating during movement of irradiated fuel which would eliminate the source term in about 160 seconds. Additionally, maintaining the ventilation system operating during an accident such as the FHA would be ALARA. The ventilation system would lower radioactive material concentrations in the reactor cell, helping to reduce occupational doses and any shine dose to members of the public outside the building. The ventilation system would also help dilute and disperse radioactive material leaving the reactor building; this would also help reduce doses to members of the public, because members of the public could be exposed to higher doses if air containing higher concentrations of radioactive material was allowed to leak directly from the reactor cell to the environment. Even with the ventilation system operating, airborne radioactive material would leak from the confinement because the confinement is not leak tight. All of the radioactive

material would leak out eliminating the source term well before the doses discussed above would be received.)

The NRC staff's estimate makes additional conservative assumptions, which are discussed in SER Section 6.1. Additionally, these dose estimates assume a person would be located 10 feet from the reactor wall for an entire year, which would not occur because this is not a location (such as a residence) that would be continually occupied by a member of the public. Conservatively assuming a 10 percent occupancy factor for this location, which is an outdoor location on the University of Florida campus, the total 1 year dose would be 0.9 mrem (based on the licensee's dose rate estimate) or 15.8 mrem (based on the NRC staff dose rate estimate). These doses are both well below the 100 mrem public dose limit in 10 CFR 20.1301.

Table 6-7 FHA - Maximum Radiation Shine through the Reactor Building

Parameters	UFTR-Calculated Dose Rate	NRC Staff Confirmatory Calculation
Dose rate at the surface of the wall (1-ft thick concrete wall) (mrem/hr)	0.0014	–
Dose rate at 10 feet from the Reactor Wall (mrem/hr)	0.0010	0.018

The NRC staff reviewed the licensee's FHA scenario and dose calculations, and finds that the methodologies and assumptions used by the licensee are reasonable, conservative, and consistent with established industry practices, except as noted in the discussion of the MHA calculations in SER Section 6.1 (except for the fuel release fraction, the methodologies and assumptions used for the licensee's FHA and MHA calculations are similar). As discussed above, the NRC staff also performed confirmatory calculations of the occupational and public doses from the FHA. The NRC staff finds, based on its review of the licensee's dose calculations, and the results of the NRC staff confirmatory calculations, that the FHA results demonstrate that the maximum FHA doses are below the occupational dose limits in 10 CFR 20.1201 and the public dose limit in 10 CFR 20.1301. Therefore, based on the information above, the NRC staff concludes that the results of the UFTR FHA are acceptable.

6.6 Experiment Malfunction

In SAR Section 13.2.4.2, the licensee states that all experiments conducted at the reactor are subject to procedural and TS requirements. The procedural and TS requirements related to experiment review and approval are focused on ensuring that experiments will not fail in a manner that could result in reactor damage, or a release of radioactivity that could result in doses exceeding the limits of 10 CFR Part 20, "Standards for Protection against Radiation."

TS 6.4.6, which is evaluated and found acceptable in SER Chapter 7, requires the licensee to use operating procedures for the conduct of irradiations and experiments that could affect reactor safety or core reactivity.

TS 6.5, which is evaluated and found acceptable in SER Section 2.3, requires the Reactor Safety Review Subcommittee to review and approve new experiments, or substantive changes related to previously approved experiments. Reviews of proposed experiments would require the performance of specific analyses to assess items such as the generation and accidental release of radionuclides and fission products, the reactivity worth, chemical and explosive characteristics of the materials, and encapsulation requirements.

TS 3.8, which is also evaluated and found acceptable in SER Section 2.3, imposes other requirements related to experiments.

TS 3.8.1 provides reactivity limits for experiments. Reactivity limits are placed on experiments to help ensure that the movement of any single experiment could not cause an inadvertent prompt reactivity excursion, and that the total reactivity worth of all experiments is less than the maximum step reactivity insertion used in the reactivity insertion accident analysis for the reactor (refer to Section 6.2 of this SER for the reactivity insertion analyses).

TS 3.8.2 provides the requirements and limits on the material content and design of experiments, and is intended to prevent damage to reactor components resulting from the failure of an experiment. TS 3.8.2.1 and TS 3.8.2.2 require that explosive materials not be irradiated in the reactor, and corrosive materials be doubly encapsulated. TS 3.8.2.3 requires that experiments shall be designed such that they will not contribute to the failure of other experiments, core components, or fuel cladding and that radiation exposures from experiment failure is bounded by 10 CFR Part 20.

TS 3.8.2.4 provides inventory limits on fueled experiments. TS 3.8.2.4 limits the quantity of radioiodines that may be generated in fueled experiments, and also requires that fueled experiments be designed such that they will not contribute to the failure of other experiments, core components, or fuel cladding. TS 3.8.2.5 helps ensure that the consequences of any fueled experiment failure are bounded by the FHA that is analyzed for the reactor (see SER Section 6.5).

The NRC staff reviewed the information above. The NRC staff finds that the licensee has proper controls established for experiments to minimize the likelihood or consequences of an experiment malfunction. The NRC staff also finds that the performance of experiments within the requirements of the TSs provides reasonable assurance that the potential consequences of experiment malfunctions would be bounded by those evaluated in the MHA for fueled experiments, 10 CFR Part 20 for other experiments, and insertion of excess reactivity accident analyses. Therefore, based on the information above, the NRC staff concludes that the results of experiment malfunctions at the UFTR are acceptable.

6.7 Loss of Electrical Power

SAR Section 13.2.5 states that the UFTR is designed to shut itself down safely in case of a loss of electric power. SAR Section 3.1 states that the control blades are “fail-safe” in the sense that they will drop into the core by gravity in the event of a loss of power, and no control or safety system is required to maintain a safe shutdown condition. The reactor does not require primary coolant, or coolant flow, once it is shut down (see SER Sections 6.3). The licensee also states that there is no credible accident that would lead to a release of radioactivity following a loss of electrical power. The facility has battery-powered radiation detection instrumentation that can be used during a power failure. The UFTR facility has a backup diesel electric generator that will auto-start to provide certain UFTR loads; however, no credit is taken for this generator for any safety analysis considerations.

The NRC staff reviewed the information in the SAR as described above, and finds that the UFTR is designed such that the reactor will shut down safely following any loss of electrical power, and that there is no credible sequences of events that could result in any release of radioactivity following the loss of power and reactor shutdown. Therefore, based on the

information above, the NRC staff concludes that the results of a loss of electrical power at the UFTR are acceptable.

6.8 External Events

SAR Section 13.2.6 states that there are no specific external events that are credible accident initiators, and that are not bounded by other accidents analyzed in the SAR. The UFTR core is under a massive concrete shielding structure that offers protection from external events. In addition, the reactor shield is within the reactor cell. Based on the information reviewed, the NRC staff finds that the UFTR is designed to withstand external events and the potential associated accidents, and therefore external events that could damage the facility or lead to fuel disruption are unlikely. The reactor facility is designed to accommodate these events without posing any undue risk to the health and safety of the public. For events that could potentially cause facility damage, the extent of anticipated damage is bounded by other accident analyses discussed in this chapter of the SER. For example, any event that could damage the fuel is bounded by the MHA (see SER Section 6.5), and any event that could damage the primary coolant system is bounded by the LOCA (discussed in Section 6.3 of this SER). Therefore, based on the information above, the NRC staff finds that any radiation exposure to UFTR staff or the public resulting from an accident related to an external event would be within 10 CFR Part 20 limits, and the NRC staff concludes that the results of external events at the UFTR are acceptable.

6.9 Mishandling or Malfunction of Equipment

SAR Section 13.2.7 states that no additional mishandling or malfunctioning of equipment scenarios are deemed credible accident scenarios, except those that are bounded by other analyses in the SAR. The NRC staff reviewed the information in the SAR and finds that the UFTR is designed with significant margin to the SL, and that the physical limitations of the reactor are such that any mishandling or malfunction of equipment event is bounded by other accidents discussed in this chapter of the SER. Therefore, on the basis of this information, the NRC staff concludes that the consequences of mishandling or malfunction of equipment at the UFTR are acceptable.

6.10 Conclusions

The NRC staff reviewed the licensee's analyses of potential accidents at the reactor facility. The NRC staff concludes that the licensee has postulated and analyzed sufficient accident-initiating events and scenarios. On the basis of its review of the information provided in the licensee's SAR, as supplemented, the NRC staff concludes the following:

- The licensee considered the expected consequences of a sufficiently broad spectrum of postulated credible accidents and an MHA, emphasizing those that could lead to a loss of integrity of fuel element clad and a release of fission products.

- The licensee analyzed the most significant credible accidents and the MHA and determined that, under conservative assumptions, the most significant credible accidents and the MHA will not result in occupational radiation exposure of UFTR staff or members of the public in excess of the applicable 10 CFR Part 20 limits.

- The licensee has generally employed appropriate methods in performing the accident and consequence analyses.

- For accidents involving insertions of excess reactivity, the licensee has demonstrated that peak fuel temperatures will be below the TS SL of 530 °C.

Licensee calculations, including assumptions, demonstrated that a LOCA would not result in unacceptable fuel element temperatures.

- The reactor can be safely cooled with all fuel elements in an air environment.

- The accident analysis confirms the acceptability of the licensed power of 100 kWt, including the response to anticipated transients and accidents.

- The accident analysis confirms the acceptability of the assumptions stated in the individual analyses provided in the SAR, as supplemented.

The NRC staff reviewed the radiation source term and MHA calculations for the UFTR. The NRC staff finds the calculations, including the assumptions, demonstrated that the source term assumed and other boundary conditions used in the analysis are generally acceptable, as noted by the NRC staff in the discussion of the MHA in SER Section 6.1. The radiological consequences to the public and occupational workers at the UFTR are in conformance with the requirements in 10 CFR Part 20. The licensee reviewed the postulated accident scenarios provided in NUREG-1537 and did not identify any other accidents with fission product release consequences not bounded by the MHA. The UFTR design features and administrative restrictions found in the TSs help to prevent the initiation of accidents and mitigate associated consequences. Therefore, on the basis of its review, the NRC staff concludes that there is reasonable assurance that no credible accident would cause significant radiological risk, and the continued operation of the UFTR poses no undue risk to the UFTR staff, the public, or the environment.

7. TECHNICAL SPECIFICATIONS

In this section of the safety evaluation report (SER), the U.S. Nuclear Regulatory Commission (NRC) staff provides its evaluation of the licensee's proposed technical specifications (TSs). The TSs for the University of Florida (UFTR) define specific features, characteristics, organizational and reporting requirements, and conditions required for the safe operation of the UFTR facility. The TSs are explicitly included in the renewal license as Appendix A. The NRC staff reviewed the format and content of the TSs for consistency with the guidance in Chapter 14, "Technical Specifications," of NUREG-1537, "Guidance for Preparing and Reviewing Applications for the Licensing of Non-Power Reactors," issued February 1996 (Ref. 51) and ANSI/ANS-15.1-2007, "The Development of Technical Specifications for Research Reactors" (Ref. 55). The NRC staff specifically evaluated the content of the proposed TSs to determine whether they meet the requirements in Title 10 of the *Code of Federal Regulations* (10 CFR) 50.36, "Technical specifications." The NRC staff also relied on NUREG-1537 to perform its review.

7.1 Technical Specification Scope, Definitions and Surveillance Intervals

The licensee proposed the following as the scope of the UFTR TSs.

TS 1.1 Scope

This document constitutes the Technical Specifications for Facility License No. R-56 as required by 10 CFR 50.36 and supersedes all prior UFTR Technical Specifications. This document includes the "bases" to support the selection and significance of the specifications. Each basis is included for information purposes only. They are not part of the Technical Specifications, and they do not constitute limitations or requirements to which the licensee must adhere.

The NRC staff reviewed and finds TS 1.1 consistent with the guidance in NUREG-1537 and ANSI/ANS-15.1-2007 and concludes it is acceptable.

The licensee proposed the following definitions to be generally consistent with the guidance in NUREG-1537 and ANSI/ANS-15.1-2007. The licensee's proposed TSs include minor modification to, and some additional facility-specific, definitions.

TS 1.2 Definitions

ACTIONS: The definition for ACTIONS is evaluated and found acceptable in Section 7.3 of this SER.

CHANNEL: A channel is the combination of sensor, line, amplifier, and output devices that are connected for the purpose of measuring the value of a parameter.

CHANNEL CALIBRATION: Channel calibration shall be the adjustment, as necessary, of the channel output such that it responds within the necessary range and accuracy to known values of the parameter that the channel measures. The channel calibration shall encompass all devices in the channel required for channel OPERABILITY and the CHANNEL TEST.

CHANNEL CHECK: Channel check shall be the qualitative verification of acceptable performance by observation of channel behavior, or by comparison of the channel indication and status with other independent channels measuring the same parameter.

CHANNEL TEST: A channel test shall be:

a. Analog and bistable channels - the introduction of a signal into the channel for verification that it is OPERABLE.
b. Digital computer channels – the use of diagnostic programs to test digital computer hardware and the introduction of simulated process data into the channel for verification that it is OPERABLE.

CORE ALTERATION: Core alteration shall be the movement of any reactor fuel assemblies, graphite moderator elements, experimental facilities, or control blade assemblies within the reactor core region in MODE 5.

CORE CONFIGURATION: The definition for CORE CONFIGURATION is evaluated and found acceptable in Section 2.1.3 of this SER.

DAMAGED FUEL: The definition for DAMAGED FUEL is evaluated and found acceptable in Section 2.2.1 of this SER.

EXCESS REACTIVITY: The definition for EXCESS REACTIVITY is evaluated and found acceptable in Section 2.1.3 of this SER.

EXPERIMENT: Any evolution, hardware, or target (excluding devices such as detectors or foils) that is designed to investigate non-routine reactor characteristics or that is intended for irradiation within an irradiation facility. Hardware rigidly secured to the core or shield structure so as to be a part of its design to carry out experiments is not normally considered an experiment.

FUEL DEFECT: The definition for FUEL DEFECT is evaluated and found acceptable in Section 2.2.1 of this SER.

MOVABLE EXPERIMENT: A movable experiment is one where it is intended that all or part of the experiment may be moved into or adjoining the core or into and out of the core while the reactor is in MODES 1 or 2.

OPERABLE - OPERABILITY: A system or component shall be operable or have operability when it is capable of performing its intended function.

OPERATING: Operating means a component or system is performing its intended function.

RATED THERMAL POWER (RTP): RTP shall be a total reactor core heat transfer rate to the reactor coolant of 100 kWt.

REACTIVITY WORTH OF AN EXPERIMENT: The reactivity worth of an experiment is the value of the reactivity change that results from the experiment being inserted into or removed from its intended position.

REACTOR CELL: The Reactor Cell is the confinement enclosure around the reactor structure that is designed to limit the release of effluents between the enclosure and its external environment through defined pathways.

REACTOR OPERATING: The reactor is operating whenever it is not in MODES 3, 4, 5 or defueled. Reactor operation at greater than or equal to 1% RTP shall be called MODE 1. Reactor operation at less than 1% RTP shall be called MODE 2.

REACTOR SHUTDOWN: The reactor is shutdown if it is subcritical by at least 760 pcm with the core at ambient temperature with the reactivity worth of xenon equal to zero and with the reactivity worth of all installed experiments included. The reactor shutdown condition shall be called MODE 3.

REACTOR SECURED: The reactor is secured when with fuel present in the reactor there is insufficient water moderator available in the reactor to attain a k_{eff} greater than 0.8 or there is insufficient fuel present in the reactor under optimum available conditions of moderation and reflection to attain a k_{eff} greater than 0.8 or the reactor is shutdown with all control blades fully inserted; and the following conditions exist:

a. the console key switch is in the OFF position and the key is removed from the switch; and
b. no work is in progress involving fuel, core structure, installed control blades, or control blade drives unless they are physically decoupled from the control blades; and
c. no experiments are being moved or serviced that have, on movement, a reactivity worth exceeding 720 pcm.

The reactor secured condition shall be called MODE 4.

REACTOR OUTAGE: The reactor is in an outage condition anytime less than two layers of concrete block shielding are fully installed over the top of the core area with fuel in the core. The reactor outage condition shall be called MODE 5.

SHALL, SHOULD, and MAY: The word "shall" is used to denote a requirement; the word "should" is used to denote a recommendation; and the word "may" is used to denote permission, neither a requirement nor a recommendation.

SHUTDOWN MARGIN: The definition for SHUTDOWN MARGIN is evaluated and found acceptable in Section 2.6.2 of this SER.

STRUCTURE, SYSTEM, OR COMPONENT (SSC): A structure is an element, or a collection of elements, to provide support or enclosure, such as a building, free-standing tanks, basins, dikes, or stacks. A system is a collection of components assembled to perform a function, such as piping, cable trays, conduits, or ventilation. A component is an item of mechanical or electrical equipment, such as a pump, valve, or relay, or an element of a larger array, such as a length of pipe, elbow, or reducer.

UNSCHEDULED SHUTDOWN: An unscheduled shutdown is any unplanned shutdown of the reactor caused by actuation of the reactor trip system, operator error, equipment malfunction, or a manual shutdown in response to conditions that could adversely affect safe operation, not including shutdowns that occur during testing or checkout operations.

TS 1.3 Surveillance Intervals

Allowed intervals shall not exceed:

a. 10 years – interval not to exceed 12 years

b. 5 years – interval not to exceed 6 years

c. Biennial – interval not to exceed 30 months

d. Annual – interval not to exceed 15 months

e. Semiannual – interval not to exceed 7.5 months

f. Quarterly – interval not to exceed 4 months

g. Monthly – interval not to exceed 6 weeks

h. Weekly – interval not to exceed 10 days

i. Daily – prior to the first reactor startup of the day

The reactor secured definition is a facility-specific definition for the UFTR. In the case of the UFTR, dumping the moderator (referred to as a "full trip" in SAR Section 7.3.1 and discussed in Section 3.2 and Section 4.4 of this SER) introduces a substantial amount of negative reactivity since the primary water in the fuel boxes acts as both a moderator and reflector. According to SAR Section 13.2.3.1, the reactivity worth of the water itself is several times greater than the combined reactivity worth of the control blades. Additionally, the ANSI/ANS-15.1-2007 definition provided as guidance limits the amount of moderator or fissile material in the reactor to prevent attaining criticality. The UFTR TS definition limits the amount of moderator or fuel (fissile material) that would be required to attain a k_{eff} greater than 0.8, which is conservative. The NRC staff's review of the UFTR definition for reactor secured compared to the NRC guidance, finds that the licensee's definition meets the intent of the guidance and is more conservative, given the unique design aspect of dumping the moderator and is, therefore, acceptable.

The NRC staff reviewed the scope, definitions, and surveillance intervals and finds that they are either facility specific or are standard definitions used in research reactor TSs and are consistent with NUREG-1537 and ANSI/ANS-15.1-2007. Some definitions in the UFTR TSs were specifically evaluated and found acceptable in other sections of this SER, and the definitions are stated in the identified SER sections. Based on the information provided above, the NRC staff concludes that the licensee's TS scope, definitions, and SR intervals are acceptable.

7.2 Safety Limits and Limiting Safety System Settings

TS 2.1 Safety Limit

TS 2.1 Safety Limit is evaluated and found acceptable in Section 2.2.1 of this SER.

TS 2.2 Limiting Safety System Setting

TS 2.2 Limiting Safety System Settings are evaluated and found acceptable in Section 2.7 of this SER.

7.3 Limiting conditions for operations and surveillance requirements

The licensee provided proposed TSs that incorporates the surveillance requirements (SRs) directly into the specifications for the limiting condition for operations (LCOs). Although different from the guidance in ANSI/ANS-15.1-2007, the NRC staff finds that the format meets the intent of the guidance and concludes that the format proposed by the licensee is acceptable.

TS 3.0.1 LCO Applicability

Specification:

1. LCOs shall be met during the MODES or other specified conditions in the Applicability, except as provided in LCO 3.0.1.2.

2. Upon discovery of a failure to meet an LCO, the Required Actions of the associated Conditions shall be met, except as provided in LCO 3.0.1.5. If the LCO is met or is no longer applicable prior to expiration of the specified Completion Time(s), completion of the Required Action(s) is not required.

3. When an LCO is not met and the associated ACTIONS are not met, or an associated ACTION is not provided, the reactor shall be placed in a MODE or other condition in which the LCO is not applicable. Action shall be initiated within 2 minutes of discovery of failure to meet the LCO. Exceptions to this Specification are stated in the individual Specifications.

4. Suspension of CORE ALTERATIONS, irradiated fuel movement, irradiated fueled EXPERIMENT movement, movement of experiments with significant potential for airborne releases, or movement of concrete block shielding over the top of the core in MODE 5, shall not preclude completion of movement of the component to a safe position.

5. When an LCO is not met solely due to interruption of recording function or indicating lamp function, the Conditions and Required Actions associated with this LCO are not required to be entered provided the recording function or indicating lamp function is restored within 15 minutes.

6. When in MODES 1 or 2 shutdown of the reactor should never be delayed when multiple unrelated LCOs are not being met simultaneously, except as provided in LCO 3.0.1.5.

In addition to specific action statements listed in individual LCOs, TS 3.0.1.1 through TS 3.0.1.6 establish general actions to be taken by an operator when a TS (i.e., the applicable structures, systems, and components (SSC) or variable) is required, but is discovered to not be operable, or not operating, or is not within TS specified limits. In support of this LCO, the licensee defines actions as:

TS 1.2 Definitions

ACTIONS: Actions shall be that part of a Specification that prescribes Required Actions to be taken under designated Conditions within specified Completion Times. The Completion Time is the amount of time allowed for completing a Required Action referenced to the time of discovery of a situation.

(…)

TS 3.0.1.1 invokes the TS action statements under TS 3.0.1.2 when a failure to meet an LCO is discovered. Upon discovery of failure to meet an LCO, TS 3.0.1.2 requires that the required action (listed in the appropriate LCO) be met, unless the LCO is restored to normal specification or the reactor is placed in a mode in which the LCO no longer applies. Additionally, LCO 3.0.1.2 provides for a special exception under TS 3.0.1.5, as discussed below.

TS 3.0.1.3 provides specific direction to the operator to place the reactor into a mode in which the LCO that is not being met is no longer applicable within two minutes of discovery if the specified action(s) for an LCO cannot be met or an associated action is not provided under the individual LCO. In most cases, this would lead to reactor shut down if the action statement is not met.

TS 3.0.1.4 is exclusive to core alterations, irradiated fuel movement, irradiated fueled experiment movement, movement of experiments with significant potential for airborne releases, or movement of concrete block shielding over the top of the core in Mode 5, and allows the operator to complete the specific movement to allow for safe completion of a component movement already in-progress to place the component in a safe position. It is not intended for evolutions that have not started to be performed.

TS 3.0.1.5 is a special exception to TS 3.0.1.2 providing for 15 minutes to restore operability if the non-compliance is due solely to a recording or indicating lamp function.

When the reactor is operating (Mode 1 or Mode 2), TS 3.0.1.6 instructs the operator to not delay shutdown of the reactor when multiple unrelated LCOs are not being met simultaneously, except if the simultaneous failures are as provided in LCO 3.0.1.5.

The NRC staff has reviewed TS 3.0.1 for “LCO Applicability” and the facility-specific definition for “Actions” and finds that the LCO and associated definition add clarity for the operation of the UFTR when it is discovered that an LCO is not being met. The more specific actions for LCOs, where stated, are evaluated in the applicable section of SER for those TSs, but the NRC staff finds TS 3.0.1 provides adequate guidance for actions to be taken when it is discovered an LCO is not being met. TS 3.0.1.3 allows the operator to assess conditions and either quickly correct the cause of the problem or place the reactor in a mode where the LCO does not apply (e.g., shutdown). The action for orderly shutting down the reactor by the operator takes several minutes. TS 3.0.1.3 and TS 3.0.1.6 will allow for continuity of operation and will prevent equipment failures without safety significance from becoming violations of the TSs. If a failure occurs that is not self-revealing (i.e., does not cause a protective action scram), the operator must take immediate action to shut down the reactor if more than two minutes have elapsed since discovery. The NRC staff finds two minute action time is reasonable to assess the need for more immediate action by the operator. Based on the above discussion, the NRC staff concludes that TS 3.0.1 is acceptable.

Per the licensee's basis statement for TS 3.0.2, the LCOs in TS 3.0.2 provide the operator with guidance and restrictions regarding missed SRs, deferred SRs, and post-maintenance testing of TS required SSCs. TS 3.0.2 states:

TS 3.0.2 Surveillance Requirement Applicability

Specification:

1. Failure to meet a surveillance, whether such failure is experienced during the performance of the surveillance or between performances of the surveillance, shall be failure to meet the associated LCO. Failure to perform a surveillance within the specified frequency shall be failure to meet the LCO except as provided in LCOs 3.0.2.2 and 3.0.2.3.

2. SRs may be deferred during MODES or other specified conditions in which a SSC or variable is not required to be OPERABLE or within specified limits; however, they shall be completed prior to entry into a MODE or other specified condition in which the SSC or variable is required to be OPERABLE or within specified limits unless entry into the MODE or other specified condition is required for performance of the surveillance as provided in LCO 3.0.2.3.

3. The following SRs require entry into the applicable MODE or other specified condition for performance of the surveillance. These SRs shall be performed as soon as practicable after entry into the MODE or other specified condition required for performance of the surveillance:
   a. SR 3.1.1
   b. SR 3.1.2
   c. SR 3.2.1.2
   d. SR 3.2.1.3
   e. SR 3.2.3.3 for LCO 3.2.3.1
   f. SR 3.7.2.2
   g. SR 3.7.2.3

4. Appropriate surveillance testing on any Technical Specification required SSC shall be conducted after replacement, repair, or modification before the SSC is considered OPERABLE except as provided in LCO 3.0.2.3.

TS 3.0.2.1 provides the operator with guidance on actions to take if an LCO SR is not met. Specifically, anytime the operator identifies an LCO SR is not met should be deemed failure to meet the LCO. This provides clarity to the operations staff for identifying failure to meet an LCO if the failure is occurring outside of performance of the specific SR or if a SR is missed (except as provided in LCOs 3.0.2.2 and 3.0.2.3).

TS 3.0.2.2 provides guidance on when performance of a SR can be deferred. For those SRs that can be deferred, it specifies which TS SRs must be performed prior to entry into a mode where they are applicable, unless they are excepted by TS 3.0.2.3.

TS 3.0.2.3 identifies seven specific LCOs that require the reactor be in the mode for which they are applicable to perform the LCO. In these cases, the specification requires that these SRs be

performed as soon as practicable after entry into the mode or other specified condition required for performance of the surveillance.

- TS 3.1.1 and TS 3.1.2 are applicable in all modes, as such these SR cannot be performed prior to entry into the mode to which it is applicable.

- SR 3.2.1.2 and SR 3.2.1.3 require control blade manipulation and therefore, entry into Mode 1 or Mode 2 in order to perform the SR.

- SR 3.2.3.3 for LCO 3.2.3.1 is the annual calibration at power for the reactor power indicating channels.

- SR 3.7.2.2 and SR 3.7.2.3 are semiannual measurements of Argon-41 generation, which are taken at full reactor power.

TS 3.0.2.4 is to ensure that appropriate surveillance testing on any TS-required system is performed after repair, replacement, or modification before that system is considered operable and returned to service, except when the system must be operated to perform the required SR, as provided for in TS 3.0.2.3.

The NRC staff reviewed TS 3.0.2 for "Surveillance Requirement Applicability," and finds that the TS is consistent with the guidance in ANSI/ANS-15.1-2007 (Ref. 55) and NUREG-1537 (Ref. 51). On this basis, the NRC staff finds TS 3.0.2 acceptable and concludes that surveillances performed within the limits of TS 3.0.2 reasonably ensures that the facility will function as analyzed in the safety analysis report (SAR).

TS 3.1 Core Reactivity Parameters

TS 3.1 Core Reactivity Parameters is evaluated and found acceptable in Section 2.6.3 of this SER.

TS 3.2 Reactor Control and Trip Systems

TS 3.2.1 Control Blades

TS 3.2.1 Control Blades is evaluated and found acceptable in Section 3.2.1 of this SER.

TS 3.2.2 Reactor Trips

TS 3.2.2 Reactor Trips is evaluated and found acceptable in Section 4.4 of this SER.

TS 3.2.3 Reactor Measuring Channels

TS 3.2.3 Reactor Measuring Channels is evaluated and found acceptable in Section 4.6 of this SER.

TS 3.3 Coolant Systems

TS 3.3.1 Leak Detection

TS 3.3.1 Leak Detection is evaluated and found acceptable in Section 3.2 of this SER.

TS 3.3.2 Reactor Coolant System Water

TS 3.3.2 Reactor Coolant System Water is evaluated and found acceptable in Sections 2.2.1 and 3.2 of this SER.

TS 3.4 Reactor Cell Evacuation Alarm Interlock

TS 3.4 Reactor Cell Evacuation Alarm Interlock is evaluated and found acceptable in Section 5.1.2 of this SER.

TS 3.5 Reactor Cell Ventilation Systems

TS 3.5 Reactor Cell Ventilation Systems is evaluated and found acceptable in Section 5.1.1 of this SER.

TS 3.6 Emergency Power – This section intentionally blank

The licensee left TS 3.6 blank. The guidance in NUREG-1537, Part 1, Appendix 14.1, Section 3.6, "Emergency Power," states that emergency electric power should be analyzed in the SAR on a case-by-case basis. In SAR Section 8.2, the licensee states the UFTR is connected to a diesel electric generator that provides backup electrical power for all reactor systems, including the radiation monitoring and physical protection systems, as well as emergency lighting. However, no credit is taken by the licensee for the back-up electrical diesel generator for safety analysis considerations.

The guidance in NUREG-1537, Part 1, Appendix 14.1, Section 4.6, "Emergency Electrical Power System," states that channel checks and operability checks should be performed. The licensee states that the emergency electric power system is not necessary to safely shut down the reactor and is not required to ensure protection of public health and safety. The NRC staff reviewed the information provided by the licensee and, as discussed in SER Section 6.7, finds that the reactor is designed such that the reactor will shut down safely following any loss of electrical power, and that there is no credible sequences of events that could result in any release of radioactivity following the loss of power and reactor shutdown. On the basis of its review, the NRC staff concludes that emergency power and, therefore, TSs controlling emergency power are not required for UFTR.

TS 3.7 Radiation Monitoring Systems and Radioactive Effluents

TS 3.7.1 Radiation Monitoring Systems

TS 3.7.1 Radiation Monitoring Systems is evaluated and found acceptable in Section 4.7 of this SER.

TS 3.7.2 Argon-41 Discharge

TS 3.7.2 Argon-41 Discharge is evaluated and found acceptable in Section 5.1.1 of this SER.

TS 3.8 Limitations on Experiments

TS 3.8.1 Experiment Reactivity Limits

TS 3.8.1 Experiment Reactivity Limits is evaluated and found acceptable in Section 2.3 of this SER.

TS 3.8.2 Experiment Materials and Malfunctions

TS 3.8.2 Experiment Materials and Malfunctions is evaluated and found acceptable in Section 2.3 of this SER.

TS 3.9 Other Facility Specific Limitations

TS 3.9.1 Shield Tank Level

TS 3.9.1 Shield Tank Level is evaluated and found acceptable in Section 2.4 of this SER.

TS 3.9.2 Fuel and Fuel Handling

TS 3.9.2 Fuel and Fuel Handling is evaluated and found acceptable in Section 2.2.1 of this SER.

TS 4.0 This section intentionally left blank. Surveillances are included in Section 3.0

The licensee left this section blank since the applicable surveillance requirements are included along with the TS in Section 3.0. The surveillance requirements associated with each TS in Section 3.0 of the TS are evaluated by the NRC staff with the respective TS.

7.4 Design features

TS 5.0 Design Features

TS 5.1 provides specifications for the UFTR site description and specific facility design features, and is applicable at all times.

TS 5.1 reads as follows:

TS 5.1 Site Description

Specification:

1. The UFTR facility and Reactor Building shall be located on the main campus of the University of Florida at Gainesville, Florida, in the immediate vicinity of the buildings housing the College of Engineering and the College of Journalism.

2. The REACTOR CELL shall be located at the north end of the Reactor Building.

3. The REACTOR CELL shall be equipped with independent air conditioning and ventilation systems.

4. The REACTOR CELL core ventilation system effluents shall be discharged through a stack at a minimum of 25 feet above ground level.

5. The REACTOR CELL minimum free volume shall be 36,000 cubic feet.

6. Access to the REACTOR CELL shall be restricted in accordance with the facility security procedures.

TS 5.1 provides important design features governing the UFTR facility physical design. These design features are important bounding conditions contributing to the safety analysis, and the radiation dose calculations performed as discussed in SER Section 5.1.1, that demonstrate that occupational and public doses from routine operation of the UFTR and accident conditions are in compliance with 10 CFR Part 20, "Standards for Protection against Radiation," requirements. The NRC staff finds that the design features specified within TS 5.1 are consistent with the analyses and dose calculation assumptions described in the SAR, as supplemented. During site visits (and as described in Section 10.2.7 and 11.2.1.2 of the SAR), the NRC staff observed that reactor-licensed material may also be found in the rabbit receiver station in Room 104 and in the liquid waste storage tank external to the reactor cell in the west fenced-in area. The NRC staff notes to extend the licensed facility beyond the reactor cell and these areas may require a license amendment. Also, to decrease the area may require an approved decommissioning plan. Otherwise, the NRC staff find that TS 5.1 is consistent with the guidance for TSs on design features provided in NUREG-1537 and ANSI/ANS-15.1-2007. Therefore, based on the information above, the NRC staff concludes that TS 5.1 is acceptable.

TS 5.2 Reactor Coolant System

TS 5.2 Reactor Coolant System is evaluated and found acceptable in Section 3.2 of this SER.

TS 5.3 Reactor Core and Fuel

TS 5.3.1 Reactor Core Design

TS 5.3.1 Reactor Core Design is evaluated and found acceptable in Section 2.2, Section 2.2.2, Section 2.2.3, and Section 2.3 of this SER.

TS 5.3.2 Reactor Core Fuel Loading

TS 5.3.2 Reactor Core Fuel Loading is evaluated and found acceptable in Section 2.2.1 of this SER.

TS 5.3.3 Reactor Fuel Design

TS 5.3.3 Reactor Fuel Design is evaluated and found acceptable in Section 2.8 of this SER.

TS 5.4 Fuel Storage

TS 5.4 Fuel Storage is evaluated and found acceptable in Section 2.8 of this SER.

7.5 Administrative controls

TS 6.0 Administrative Controls

TS 6.1 Organization

Responsibility for the safe operation of the reactor facility is vested within the hierarchy of the licensee's organization described in TS 6.1.1 and depicted graphically in TS Figure 6-1:

TS 6.1.1 Structure

The organization for the management and operation of the reactor facility shall include the structure indicated in Figure 6-1. Four levels of authority are provided.

Level 1 - Individuals responsible for the reactor facility's licenses, charter, and site administration.

Level 2 - Individual responsible for reactor facility management.

Level 3 - Individual responsible for reactor operations, and supervision of day-to-day facility activities.

Level 4 - Reactor operations staff.

TS 6.1.1 requires the UFTR organization structure to be organized as shown in TS Figure 6.1. The NRC staff finds this specification helps ensure that the UFTR organization structure, including the communication and reporting lines, are properly delineated by the TSs. The NRC staff finds that the UFTR organizational structure in TS Figure 6.1 is consistent with the guidance in NUREG-1537 and ANSI/ANS-15.1-2007. Based on the information provided, the NRC staff concludes that TS 6.1.1 and TS Figure 6.1 are acceptable.

TS 6.1.2 Responsibility

Responsibility for the safe operation of the reactor facility shall be with the chain of command established in Figure 6-1. In addition to having responsibility for the policies and operation of the reactor facility, individuals at various management levels shall be responsible for safeguarding the public and facility personnel from undue radiation exposures, and for adhering to all requirements of the operating license and Technical Specifications. In all instances, responsibilities of one level may be assumed by designated alternates or by higher levels, conditional upon appropriate qualifications.

TS 6.1.2 provides the positions at UFTR responsible for safeguarding the public and facility personnel from undue radiation exposure and implementing the TSs. The NRC staff finds that this specification helps to ensure that key positions in the UFTR organizational structure understand their TS responsibilities to meet the conditions of the license and regulations. The NRC staff finds that the organizational responsibilities described in TS 6.1.2 are consistent with the guidance in NUREG-1537 and ANSI/ANS-15.1-2007. Based on the information provided, the NRC staff concludes that TS 6.1.2 is acceptable.

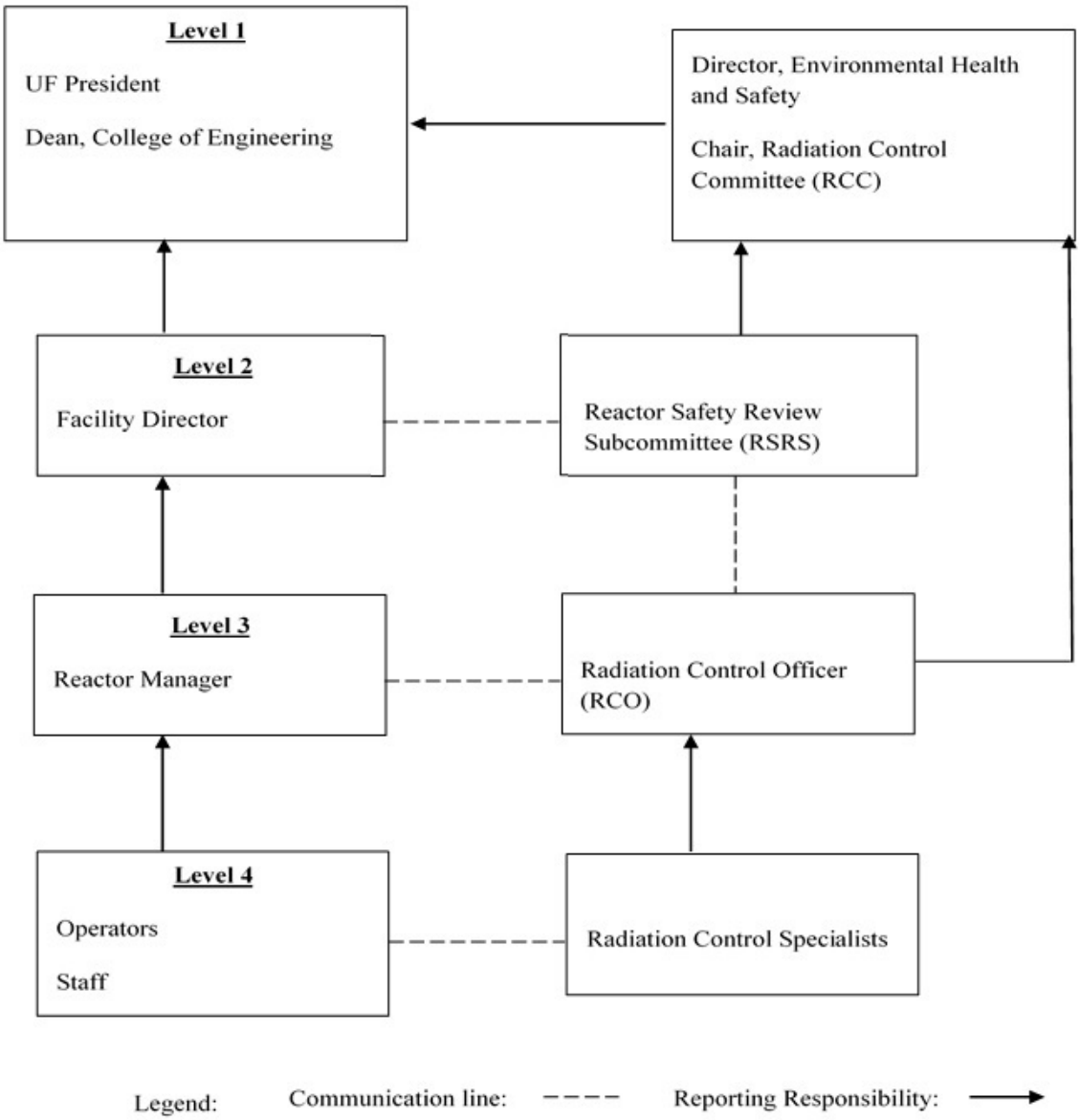

TS Figure 6-1 UFTR Organizational Chart

TS 6.1.3 addresses staffing requirements:

TS 6.1.3 Staffing

1. The minimum staffing when the reactor is in MODES 1, 2, or 3 shall be:

   a. An operator in the control room,

   b. A designated second person, physically located on the grounds of the University of Florida campus and capable of getting to the control room within 10 minutes under normal conditions, able to carry out prescribed written instructions, and

c. A designated senior operator shall be readily available on call. "Readily Available on Call" means an individual who:

i. has been specifically designated and the designation known to the operator on duty,

ii. can be rapidly contacted by phone or other means of communication available to the operator on duty, and

iii. is capable of getting to the reactor facility within 30 minutes under normal conditions.

2. A list of reactor facility personnel by name and telephone number shall be readily available in the control room for use by the operator. The list shall include:

a. Management personnel,

b. Radiation control personnel, and

c. Other operations personnel.

3. Events requiring the presence at the facility of a senior operator are:

a. All CORE ALTERATIONS,

b. Initial startup and approach to power,

c. Relocation of any EXPERIMENT with reactivity worth greater than 720 pcm,

d. Recovery from an UNSCHEDULED SHUTDOWN or unplanned reduction in power of 10 kWth or more, and

e. During movement of concrete block shielding over top of the core in MODE 5.

TS 6.1.3.1 requires that during reactor operation, there shall be a licensed reactor operator (RO) or a senior RO (SRO) in the control room and a second person must be present who is capable of carrying out prescribed instructions. Additionally, a designated senior operator must be readily available on call. The licensee defines the conditions for “readily available on call” as designated to the operator on duty, rapidly available to the operator by phone or other communication method, and capable of getting to the reactor facility within 30 minutes under normal conditions. The NRC staff finds that this TS meets the regulation in 10 CFR 50.54(k), which states that, “An operator or senior operator licensed pursuant to part 55 of this chapter shall be present at the controls at all times during the operation of the facility.” The NRC staff also finds that this specification is consistent with the guidance in NUREG-1537 and ANSI/ANS-15.1-2007. Based on the information provided, the NRC staff concludes that TS 6.1.3.1 is acceptable.

TS 6.1.3.2 requires that a list of reactor facility personnel by name and telephone number shall be readily available in the control room for use by the operator. The list shall include (1) management personnel, (2) radiation control personnel, and (3) other operations personnel. The NRC staff reviews and finds that this specification describes those key personnel whose name and telephone numbers must be readily available in the control room to the operating staff. The NRC staff also that TS 6.1.3.2 is consistent with the guidance in NUREG-1537 and ANSI/ANS-15.1-2007. Based on the information provided, the NRC staff concludes that TS 6.1.3.2 is acceptable.

TS 6.1.3.3 states the events requiring the presence of a SRO at the facility. The NRC staff finds that this specification describes those events requiring a senior operator to be present. These events include (1) all core alterations; (2) initial startup and approach to power; (3) relocation of any experiment with reactivity worth greater than 720 percent millirho; (4) recovery from an unscheduled shutdown or unplanned reduction in power of 10 kilowatt thermal or more as defined in TS 1.2; and, (5) during movement of concrete block shielding over top of the core in Mode 5. The limitation on concrete shielding is important for the UFTR because the reactor is housed in a monolith of concrete and beryllium shielding. Inadvertent dropping of one of the shield blocks is the initiating event for the maximum hypothetical accident. As such, a SRO is required to be present to supervise this movement. The NRC staff finds that limitations requiring that a senior operator be present are appropriate for the UFTR facility and are consistent with the guidance in NUREG-1537 and ANSI/ANS-15.1-2007. Based on the information provided, the NRC staff concludes that TS 6.1.3.3 is acceptable.

TS 6.1.4 addresses selection and training of personnel as follows:

TS 6.1.4 Selection and Training of Personnel

The selection and training of licensed operations personnel should be in accordance with the American National Standard, ANSI/ANS-15.4-2016, Selection and Training of Personnel for Research Reactors.

TS 6.1.4 requires that the selection and training of operations personnel should be in accordance with the requirements of ANSI/ANS-15.4-2016, “Selection and Training of Personnel for Research Reactors.” Qualification and requalification of licensed reactor operators shall be performed in accordance with an NRC approved program. The NRC staff finds that TS 6.1.4 helps ensure the selection and training of operators will be accomplished using the guidance in ANSI/ANS-15.4-2016. The NRC staff also finds that this specification is consistent with the guidance in NUREG-1537 and ANSI/ANS-15.1-2007. Based on the information provided, the NRC staff concludes that TS 6.1.4 is acceptable.

TS 6.2 states the following:

TS 6.2 Review and Audit

TS 6.2.1 RSRS Composition and Qualifications

1. The RSRS shall be composed of a minimum of three members with expertise in reactor technology and/or radiological safety.

2. Members of the RSRS shall be appointed by and report to the Chair of the Radiation Control Committee (RCC).

3. Qualified and approved alternates may serve in the absence of regular members.

TS 6.2.2 RSRS Rules

RSRS functions shall be conducted in accordance with the following charter:

1. At least one meeting shall be held annually. Meetings may be held more frequently as circumstances warrant, consistent with the effective monitoring of facility operations as determined by the RSRS Chair;

2. The RSRS Chair shall ensure meeting minutes are submitted, reviewed, and approved, no later than the next RSRS meeting; and

3. A quorum shall consist of not less than one-half of the voting members where the operating staff does not constitute a majority.

The guidance in ANSI/ANS-15.1-2007 states that the review and audit functions in accordance with an established charter including provisions for the frequency of meetings, defining a quorum, and timely review, approval, and dissemination of meeting minutes. The NRC staff reviewed TS 6.2.2 and finds that TS 6.2.2 provides the charter and rules for the review and audit functions consistent with the guidance.

TS 6.2.3 RSRS Review Functions

The following items shall be reviewed:

1. Determinations that proposed changes or experiments or tests do not require prior NRC authorization, pursuant to 10 CFR 50.59;

2. New procedures and major revisions of existing procedures having safety significance;

3. Proposed changes to a SSC having safety significance;

4. Proposed changes in Technical Specifications or license;

5. All new tests;

6. Violations of Technical Specifications or license;

7. Violations of procedures having safety significance;

8. Operating abnormalities having safety significance;

9. Reportable occurrences listed in Section 6.7.2; and

10. Audit reports required by Technical Specifications.

TS 6.2.4 Audit Functions

The audit function shall include selective but comprehensive examination of operating records, logs, and other documents. Discussions with cognizant personnel and observation of operations should be used also as appropriate. In no case shall the individual immediately responsible for the area perform an audit in that area. The following items shall be audited:

1. Facility operations for conformance to the Technical Specifications and applicable license conditions, annually;

2. The retraining and requalification program for the operating staff, biennially;

3. The results of action taken to correct deficiencies in reactor SSCs or methods of operations that affect reactor safety, annually; and

4. The emergency plan, security procedures, and emergency implementing procedures, biennially.

A written report of audit findings shall be submitted to the Dean of the College of Engineering and RSRS members within three months after the audit has been completed. Deficiencies uncovered that affect reactor safety shall immediately be reported to Dean of the College of Engineering.

TS 6.2.1, TS 6.2.2, TS 6.2.3, and TS 6.2.4 establish the requirements for review and audit of the facility and the underlying elements of the Reactor Safety Review Subcommittee (RSRS), such as composition, qualifications, charter and rules, and review and audit functions that support this requirement. SAR Section 12.2 states that independent review and audit functions are performed by the RSRS. Members are appointed by the Chair of the Radiation Control Committee. The RSRS members are chosen for their relevant expert knowledge and meet at least once each calendar year. SAR Section 12.2 also outlines quorums, review functions, frequencies of audits, and lists audit activities. The NRC staff reviewed TS 6.2.1, TS 6.2.2, TS 6.2.3, and TS 6.2.4 and the information provided in the SAR and finds TS 6.2.1, TS 6.2.2, TS 6.2.3, and TS 6.2.4 consistent with the guidance in ANSI/ANS-15.1-2007 and NUREG-1537. Based on the information provided, the NRC staff concludes that TS 6.2.1, TS 6.2.2, TS 6.2.3, and TS 6.2.4 are acceptable.

TS 6.3 Radiation Safety

TS 6.3 Radiation Safety is evaluated and found acceptable in Section 5.1.2 of this SER.

TS 6.4 Procedures

The UFTR facility shall be operated and maintained in accordance with approved written procedures. All procedures and major revisions thereto shall be reviewed and approved by the Facility Director before going into effect. Operating procedures shall be in effect for the following items:

1. Startup, operation and shutdown of the reactor;

2. Fuel loading, unloading, and movement within the reactor;

3. Maintenance of major components of systems that could have an effect on reactor safety;

4. Surveillances and inspections required by the Technical Specifications or those that may have an effect on reactor safety;

5. Personnel radiation protection, consistent with applicable regulations. The procedures shall include management commitment to maintain exposures as low as reasonably achievable (ALARA);

6. Administrative controls for operations and maintenance and for the conduct of irradiations and EXPERIMENTS that could affect reactor safety or core reactivity;

7. Implementation of the Emergency Plan and security procedures; and

8. Use, receipt, and transfer of by-product material, if appropriate.

TS 6.4 establishes the requirements pertaining to procedures used at the UFTR. TS 6.4 states that the Facility Director shall review and approve all procedures and major revisions to them before they become effective. As noted above and in TS 6.2.3, the RSRS reviews all new procedures having safety significance and major revisions to them. TS 6.4 lists the areas to be covered by such procedures, including startup, operation, and shutdown of the reactor; installation and removal of fuel; maintenance; surveillance and calibration; actions to respond to malfunctions and emergencies, including emergency plan activities; administrative control of operations, maintenance, and experiments; and radiation protection program activities. SAR Section 12.3 provides detail on the various types of procedures at the UFTR. The NRC staff finds that this is an acceptable set of activities that corresponds to the guidance in ANSI/ANS-15.1-2007.

The licensee may make substantive changes to the procedures with the review of the RSRS and the approval of the Facility Director. The NRC staff finds this is consistent with the guidance in ANSI/ANS-15.1-2007 and NUREG-1537. The NRC staff also finds that the process and method for procedures established in TS 6.4 ensure adequate management control and proper review of procedures. Based on the information provided, the NRC staff concludes that TS 6.4 is acceptable.

TS 6.5 Experiment Review and Approval

TS 6.5, Experiment Review and Approval is evaluated and found acceptable in Section 2.3 of this SER.

TS 6.6 defines the required actions for events, including those actions to be taken in case of a safety limit (SL) violation and a reportable occurrence:

TS 6.6 Required Actions

TS 6.6.1 Action to be Taken in the Event of a Safety Limit Violation

1. The reactor shall be shut down, the Facility Director shall be notified, and reactor operations shall not resume until authorized by the NRC;

2. The NRC shall be notified in accordance with Section 6.7.2; and

3. A safety limit violation report shall be prepared. The report shall describe the following:

    a. Applicable circumstances leading to the violation including, when known, the cause and contributing factors;

    b. Effect of the violation upon reactor facility components, systems, or structures and on the health and safety of personnel and the public; and

    c. Corrective action to be taken to prevent recurrence.

The report shall be reviewed by the RSRS and any follow-up report shall be submitted to the NRC when authorization is sought to resume operation of the reactor.

TS 6.6.1 establishes the requirements for action to be taken if a SL is exceeded. It requires the reactor to be shut down and maintained shut down until restart is authorized by the NRC, the Facility Director to be notified, and the SL violation to be reported to the NRC. The NRC staff finds that this specification helps to ensure prompt action and reporting are performed should a SL violation occur. It also requires that a detailed follow-up report be made to the NRC. The due date for the initial and follow-up report are specified in TS 6.7.2. The NRC staff also finds that this specification is consistent with the guidance provided in NUREG-1537 and ANSI/ANS-15.1-2007 and meets the requirements of 10 CFR 50.36(c)(1)(i)(A). Based on the information provided, the NRC staff concludes that TS 6.6.1 is acceptable.

TS 6.6.2 Actions to be Taken in the Event of an Occurrence of the Type Identified in TS Section 6.7.2.a Other Than a Safety Limit Violation

1. Reactor conditions shall be returned to normal, or the reactor shall be shut down;

2. If it is necessary to shut down the reactor to correct the occurrence, operations shall not be resumed unless authorized by the Facility Director or designated alternates;

3. Occurrence shall be reported to the Facility Director or designated alternates and to the NRC as required in Section 6.7.2; and

4. Occurrence shall be reviewed by the RSRS at its next scheduled meeting.

TS 6.6.2 requires the reporting of an abnormal occurrence, other than a SL violation, that requires a special report. The NRC staff finds that this specification helps to ensure that such reports are made and actions are taken when appropriate. The NRC staff finds that this specification is consistent with the guidance in NUREG-1537 and ANSI/ANS-15.1-2007. Based on the information provided, the NRC staff concludes that TS 6.6.2 is acceptable.

TS 6.7 lists the type of required reports that must be prepared for various situations that may occur during UFTR operations.

TS 6.7 Reports

TS 6.7.1 Annual Operating Reports

An annual report covering the previous calendar year shall be submitted to the NRC Document Control Desk by June 30 of each year consisting of:

1. A narrative summary of reactor operating experience including the energy produced by the reactor or the hours the reactor was critical, or both;

2. The UNSCHEDULED SHUTDOWNS including, where applicable, corrective action taken to preclude recurrence;

3. Tabulation of major preventive and corrective maintenance operations having safety significance;

4. A brief description, including a summary of the change evaluation, of changes, tests, and EXPERIMENTS implemented under 10 CFR 50.59;

5. A summary of the nature and amount of radioactive effluents released or discharged to the environs beyond the effective control of the facility licensee as determined at, or before, the point of such release or discharge. The summary shall include to the extent practicable an estimate of individual radionuclides present in the effluent. If the estimated average release after dilution or diffusion is less than 25% of the concentration allowed, a statement to this effect is sufficient;

6. A summarized result of environmental surveys performed outside the facility; and

7. A summary of exposure received by facility personnel and visitors where such exposures are greater than 25% of that allowed in 10 CFR Part 20.

TS 6.7.1 establishes the requirements for operating reports to be submitted to the NRC regarding conditions at the facility. This specification helps to ensure that important information will be provided to the NRC in a timely manner. The NRC staff finds that areas covered by these reports and the schedules for submittal are consistent with the guidance in ANSI/ANS-15.1-2007, and the contents of the reports are consistent with the guidance in NUREG-1537. Based on the information provided, the NRC staff concludes that TS 6.7.1 is acceptable.

TS 6.7.2 lists the special reports that must be prepared, as well as their schedules for completion and submittal, as follows:

TS 6.7.2 Special Reports

a. There shall be a report not later than the following working day by telephone and confirmed in writing by facsimile or similar conveyance to the NRC Headquarters Operations Center, to be followed by a written report that describes the circumstances of the event within 14 days of any of the following:

1. Violation of safety limit;

2. Release of radioactivity from the site above allowed limits;

3. MODE 1 or MODE 2 operation with actual trip system settings for required systems less conservative than the limiting safety system settings;

4. MODE 1 or MODE 2 operation in violation of limiting conditions for operation unless prompt remedial action is taken as permitted in Section 3;

5. A reactor safety system component malfunction that renders or could render the reactor safety system incapable of performing its intended safety function. If the malfunction or condition occurs during MODES or conditions in which the LCO is not applicable then no report is required;

   Note: Where components or systems are provided in addition to the minimum required by the Technical Specifications, the failure of the extra components or systems is not considered reportable provided that the minimum number of components or systems specified or required are capable of performing their intended function.

6. An unanticipated or uncontrolled change in reactivity greater than 720 pcm. Reactor trips resulting from a known cause are excluded;

7. Abnormal and significant degradation in reactor fuel or cladding, or both, coolant boundary (excluding minor leaks), or REACTOR CELL boundary (excluding minor leaks) where applicable; or

8. An observed inadequacy in the implementation of administrative or procedural controls such that the inadequacy causes or could have caused the existence or development of an unsafe condition with regard to reactor operations.

b. There shall be a written report within 30 days to the NRC of the following:

   1. Permanent changes in the facility organization of Level 1 or 2 personnel, and

   2. Significant changes in the transient or accident analyses as described in the Safety Analysis Report.

TS 6.7.2 establishes the requirements for special reports to be submitted to the NRC regarding conditions at the facility. TS 6.7.2 also defines those events that constitute a reportable occurrence. This specification helps to ensure that important information will be provided to the NRC in a timely manner. The NRC staff finds that areas covered by these reports and the schedules for submittal are consistent with the guidelines in ANSI/ANS-15.1-2007, and the contents of the reports are consistent with the guidance in NUREG-1537. Based on the information provided, the NRC staff concludes that TS 6.7.2 is acceptable.

TS 6.8 Records

TS 6.8.1 Records Shall be Retained for a Period of at Least Five Years or for the Life of the Component Involved if Less Than Five Years

1. Normal reactor operation (but not including supporting documents such as checklists, log sheets, etc., which shall be maintained for a period of at least one year),

2. Principal maintenance operations,

3. Reportable occurrences,

4. Surveillance activities required by the Technical Specifications,

5. Reactor facility radiation and contamination surveys where required by applicable regulations,

6. EXPERIMENTS performed with the reactor,

7. Fuel inventories, receipts, and shipments,

8. Approved changes in operating procedures, and

9. Records of meetings and audit reports of the RSRS.

TS 6.8.1.1 through TS 6.8.1.9 help ensure that certain records are retained for five years or an appropriate lesser period. The NRC staff reviewed TS 6.8.1.1 through TS 6.8.1.9 and finds that the record requirements are consistent with the guidance in NUREG-1537 and ANSI/ANS-15.1-2007. Based on the information provided, the NRC staff concludes that TS 6.8.1.1 through TS 6.8.1.9 are acceptable.

TS 6.8.2 Records Shall Be Retained for at Least One Training Cycle

Record of retraining and requalification of operators shall be maintained at all times the individual is employed or until the operator's license is renewed.

TS 6.8.2 helps ensure that records for retraining and requalification of operators are maintained at all times the individual is employed at UFTR or until the license is renewed. The NRC staff reviewed TS 6.8.2 and finds that the records retention requirements for licensed operators consistent with the guidance in NUREG-1537 and ANSI/ANS-15.1-2007. Based on the information provided, the NRC staff concludes that TS 6.8.2 is acceptable.

TS 6.8.3 Records Shall Be Retained for the Lifetime of the Facility

1. Gaseous and liquid radioactive effluents released to the environs,

2. Offsite environmental monitoring surveys,

3. Radiation exposures for all personnel monitored,

4. Drawings of the reactor facility, and

5. Reviews and reports pertaining to a violation of a safety limit, limiting safety system setting, or limiting conditions for operations.

TS 6.8.3.1 through TS 6.8.3.5 help to ensure that the appropriate records are retained for the lifetime of the facility. The NRC staff reviewed TS 6.8.3.1 through TS 6.8.3.5 and finds that TS 6.8.3.1 through TS 6.8.3.5 provide a description of the records which need to be retained for the lifetime of the facility, and are consistent with the guidance in NUREG-1537 and ANSI/ANS-15.1-2007. Based on the information provided, the NRC staff concludes TS 6.8.3.1 through TS 6.8.3.5 are acceptable.

TS 6.8 requires records to be maintained for the life of the facility, for five years, and for the requalification or employment period of operators. The NRC staff finds that this specification helps to ensure the retention of records that are required to be retained. The NRC staff finds that this specification is consistent with the guidance in NUREG-1537 and ANSI/ANS-15.1-2007. Based on the information provided the NRC staff concludes that TS 6.8 is acceptable.

7.6 Conclusion

The NRC staff has evaluated the TSs as part of its review of the application for renewal of Facility Operating License No. R-56 (NRC Docket No. 50-83). The TSs define certain features, characteristics, organizational and reporting requirements, and conditions governing the operation of the UFTR. The renewed license includes the TSs as Appendix A. The NRC staff specifically evaluated the content of the TSs to determine if they meet the requirements in 10 CFR 50.36. Based on its review, the NRC staff concludes that the proposed TSs meet the requirements of the regulations. The NRC staff also reviewed the format and content of the TSs for consistency with the guidance in ANSI/ANS-15.1-2007 and NUREG-1537 and finds that the proposed TSs are consistent with these guidance. The NRC staff based this conclusion on the following findings:

- To satisfy the requirements of 10 CFR 50.36(a), the licensee provided proposed TSs with the license renewal application. The regulation requires that the proposed TSs include appropriate summary statements of the bases or reasons for submitting the TSs, but shall not be part of the TSs as required by 10 CFR 50.36(a)(1).

- The UFTR is a facility of the type described in 10 CFR 50.21(c), and therefore, as required by 10 CFR 50.36(b), the facility license will include the TSs. To satisfy the requirements of 10 CFR 50.36(b), the licensee provided TS derived from analyses in the SAR, as supplemented by responses to requests for additional information.

- The proposed TSs specify a SL on the fuel temperature and limiting safety system settings for the reactor protection system to prevent reaching the SL to satisfy 10 CFR 50.36(c)(1) requirements.

- The TS contain an LCO for each item that meets one or more of the criteria specified in 10 CFR 50.36(c)(2)(ii).

- The TS contain surveillance requirements that satisfy the provisions of 10 CFR 50.36(c)(3).

- The TS contain design features that satisfy the requirements of 10 CFR 50.36(c)(4).

- The proposed TSs contain administrative controls that satisfy the requirements of 10 CFR 50.36(c)(5). The proposed TSs contain requirements for initial notification, written reports, and records that satisfy 10 CFR 50.36(c)(1), (2), and (7); and that the NRC staff deemed necessary in accordance with 10 CFR 50.36(c)(8).

- The proposed TSs acceptably implement the recommendations of Part 1 of NUREG-1537, and ANSI/ANS-15.1-2007, by using definitions that are acceptable.

The NRC staff reviewed and finds the TSs to be acceptable and concludes that normal operation of the UFTR within the limits of the TSs will not result in radiation exposures in excess of the limits specified in 10 CFR Part 20 for members of the general public or for occupational exposures. The NRC staff also finds that the TSs provide reasonable assurance that the facility will be operated as analyzed in the SAR, and in accordance with the applicable regulations. The NRC staff concludes that adherence to the TSs during the license renewal period will limit the likelihood of malfunctions and the potential accident scenarios discussed in Chapter 6 of this SER, and the conduct of activities by the licensee will not endanger the facility staff or members of the public.

8. CONCLUSIONS

On the basis of its evaluation of the application as discussed in the previous chapters of this safety evaluation report, the U.S. Nuclear Regulatory Commission (NRC) staff concludes the following:

- The application for license renewal dated July 18, 2002, as supplemented, complies with the standards and requirements of the Atomic Energy Act (AEA) of 1954, as amended, and the Commission's rules and regulations set forth in Title 10 of the *Code of Federal Regulations* (10 CFR).

- The facility will operate in conformity with the application, as well as the provisions of the AEA of 1954, as amended, and the rules and regulations of the Commission.

- There is reasonable assurance that (1) the activities authorized by the renewed license can be conducted at the designated location without endangering public health and safety, and (2) such activities will be conducted in compliance with the rules and regulations of the Commission.

- The facility will continue to be useful in the conduct of research and development activities.

- The facility is technically and financially qualified to engage in the activities authorized by the renewed facility operating license in accordance with the rules and regulations of the NRC.

- The applicable provisions of 10 CFR Part 140, "Financial Protection Requirements and Indemnity Agreements," have been satisfied.

- The issuance of this license is in accordance with 10 CFR Part 51, "Environmental Protection Regulations for Domestic Licensing and Related Regulatory Functions," of the NRC's regulations and all applicable requirements have been satisfied and are documented in the Environmental Assessment published on September 8, 2010 (75 FR 54657).

- The receipt, possession, and use of byproduct and special nuclear materials, as authorized by this renewed facility operating license, will be in accordance with the NRC's regulations in 10 CFR Part 30, "Rules of General Applicability to Domestic Licensing of Byproduct Material;" and 10 CFR Part 70, "Domestic Licensing of Special Nuclear Material."

- The issuance of the renewed license will not be inimical to the common defense and security or to public health and safety.

9. REFERENCES

1. University of Florida, “University of Florida Training Reactor - License Application,” July 18, 2002, ADAMS Accession No. ML022130145.
2. University of Florida, “UFTR Relicensing Application Submittal Package with Supporting Documents,” July 29, 2002, ADAMS Accession No. ML022130140.
3. University of Florida, “University of Florida Safety Analysis Report Supporting License Renewal (Redacted),” July 31, 2002, ADAMS Accession No. ML081340724.
4. University of Florida, “Redacted - University of Florida Test Reactor Safety Analysis Report Change Pages for License Renewal Application,” February 25, 2003, ADAMS Accession No. ML102240048.
5. University of Florida, “Redacted - Response to NRC Request for Additional Information Related to License Renewal for the University of Florida Training Reactor- Redacted Version,” April 7, 2008, ADAMS Accession No. ML081350571.
6. U.S. Nuclear Regulatory Commission, “Issuance of Order Modifying License No. R-56 to Convert From High- to Low-Enriched Uranium Fuel (Amendment No. 26) - University of Florida Training Reactor,” September 1, 2006, ADAMS Accession No. ML062440101.
7. University of Florida, “University of Florida Training Reactor - Request Additional Time to Respond to RAI re: License Renewal,” February 2, 2012, ADAMS Accession No. ML12053A152.
8. University of Florida, "UFTR Responses to Request for Additional Information (ML113560528),” December 21, 2012, ADAMS Accession No. ML12361A262.
9. University of Florida, “Redacted Version-University of Florida, Response to Request for Additional Information for License Renewal,” [TS, EP, ALARA, & SAR Ch. 4 and 13], August 30, 2013,” ADAMS Accession No. ML16271A533.
10. University of Florida, “UFTR Responses to Request for Additional Information (ML113560528),” [Updated SAR Submittal; Ch. 2 & 7], December 12, 2013, ADAMS Accession No. ML13353A174.
11. University of Florida, “UFTR Responses to Request for Additional Information (ML113560528), [Updated SAR Submittal; Ch. 1, 3, 5, 6, 8 and 11], February 18, 2014, ADAMS Accession No. ML14070A061.
12. University of Florida, “Redacted Version-University of Florida, Response to RAIs SAR Ch. 9, 10, 12, and 16,” April 9, 2014, ADAMS Accession No. ML16271A541.
13. University of Florida, “University of Florida Training Reactor Application for HEU-LEU Conversion,” December 2, 2005, ADAMS Accession No. ML062220375.
14. U.S. Nuclear Regulatory Commission, “University of Florida - Request for Additional Information Re: High Enriched to Low Enriched Uranium Conversion for the University of Florida Training Reactor,” May 2, 2006, ADAMS Accession No. ML061220262.
15. U.S. Nuclear Regulatory Commission, “E-mail to U of Florida - Clarification of RAI 16 and 17 of May 2, 2006,” May 18, 2006, ADAMS Accession No. ML061420119.

16. U.S. Nuclear Regulatory Commission, “Letter to Dr. William G. Vernetson from Alexander Adams re: University of Florida - Request for Additional Information Re: High Enriched to Low Enriched Uranium conversion for the University of Florida Training Reactor,” May 22, 2006, ADAMS Accession No. ML061380167.

17. University of Florida, “University of Florida Training Reactor RAI Response HEU-LEU Conversion,” June 19, 2006, ADAMS Accession No. ML062220178.

18. University of Florida, “University of Florida Training Reactor, Request for Change in Technical Specifications Approving HEU to LEU Conversion with Responses to Requests for Additional Information,” July 20, 2006, ADAMS Accession No. ML062050252.

19. University of Florida, “University of Florida Training Reactor, Responses dated August 4, 2006 to NRC request for additional information for HEU to LEU fuel conversion,” August 4, 2006, ADAMS Accession No. ML062350107.

20. University of Florida, “Submittal of Responses to NRC Request for Additional Information for the Conversion from High-Enriched Uranium to Low-Enriched Uranium Fuel,” August 22, 2006, ADAMS Accession No. ML062400265.

21. University of Florida, “University of Florida Training Reactor, Submittal of Startup Report Based on Issuance of Order Modifying License No. R-56 to Convert from High-To-Low-Enriched Uranium Fuel (Amendment No. 26),” April 6, 2008, ADAMS Accession No. ML090990541.

22. U.S. Nuclear Regulatory Commission, “University of Florida – Request for Additional Information Regarding License Renewal for the University of Florida Training Reactor,” July 18, 2016, ADAMS Accession No. ML15336A796.

23. U.S. Nuclear Regulatory Commission, “University of Florida – Request for Additional Information Regarding License Renewal for the University of Florida Training Reactor,” July 25, 2016, ADAMS Accession No. ML15336A005.

24. University of Florida, “UFTR Responses to Request for Additional Information for License Renewal Technical Specifications,” October 31, 2016, ADAMS Accession No. ML16305A354.

25. University of Florida, “Redacted Version: Univ. of Florida - Updated FSAR Supplement; SAR, ALARA, TS,” November 30, 2016, ADAMS Accession No. ML17054C281.

26. University of Florida, “Supplemental Information to Support License Renewal Application-Redacted Version,” March 6, 2017, ADAMS Accession No. ML17065A267.

27. University of Florida, “Supplemental Information to Support License Renewal Application-Redacted Version,” March 24, 2017, ADAMS Accession No. ML17084A000.

28. University of Florida, “University of Florida-Gainesville - Transmittal of 2014-2015 Annual Report,” February 29, 2016, ADAMS Accession No. ML16064A429.

29. University of Florida, “University of Florida Training Reactor (UFTR), Submittal of 2013-2014 Annual Report,” February 27, 2015, ADAMS Accession No. ML15098A638.

30. University of Florida, “University of Florida Training, Reactor (UFTR) - 2012-2013 Annual Report,” March 14, 2014, ADAMS Accession No. ML14087A123.

31. University of Florida, “University of Florida Training Reactor (UFTR) - 2011-2012 Annual Report,” February 28, 2013, ADAMS Accession No. ML13066A174.

32. University of Florida, “University of Florida Training, Reactor (UFTR) - 2010-2011 Annual Report,” February 29, 2012, ADAMS Accession No. ML12061A263.

33. University of Florida, “University of Florida, Submittal of Annual Progress Report,” [2009-10], March 18, 2011, ADAMS Accession No. ML110830086.

34. University of Florida, “University of Florida Training Reactor, Submittal of Annual Progress Report for 09/01/08 - 08/31/09,” March 5, 2010, ADAMS Accession No. ML100750242.

35. University of Florida, “University of Florida, Submittal of Annual Report for 2007 – 2008,” February 16, 2009, ADAMS Accession No. ML090500396.

36. University of Florida, “Annual Report for University of Florida Training Reactor, License R-56 [2006-07],” February 16, 2009, ADAMS Accession No. ML092390117.

37. University of Florida, “University of Florida Training Reactor Annual Report for 2005-2006,” February 16, 2009, ADAMS Accession No. ML092390039.

38. University of Florida, “University of Florida - Training Reactor Annual Progress Report September 1, 2004 - August 31, 2005,” February 28, 2006, ADAMS Accession No. ML092440258.

39. University of Florida, “University of Florida Training Reactor Annual Progress Report for September 1, 2003 - August 31, 2004,” December 31, 2005, ADAMS Accession No. ML092440257.

40. University of Florida, “University of Florida 2002-3 Training Reactor Annual Progress Report,” January 5, 2006, ADAMS Accession No. ML060190085.

41. U.S. Nuclear Regulatory Commission, “IR 05000083-08-201, on 02/25/2008 - 02/28/2008, University of Florida,” March 12, 2008, ADAMS Accession No. ML080670348.

42. U.S. Nuclear Regulatory Commission, “IR 0500083-009-201, on 02/02-05/2009 and 03/30/2009 - 04/02/2009, University of Florida Test Reactor - NRC Inspection Report,” April 29, 2009, ADAMS Accession No. ML091060755.

43. U.S. Nuclear Regulatory Commission, “IR 05000083-10-201, on March 22-25 2010, University of Florida, Onsite Review of Selected Aspects of University Of Florida's (Licensee's) Class II Research Reactor Safety Program Including: Organizational Structure & Staffing, Radiation Protection,” April 14, 2010, ADAMS Accession No. ML100980225.

44. U.S. Nuclear Regulatory Commission, “[Non-routine] IR 05000083-10-203, on August 17-19, 2010, University of Florida,” September 15, 2010, ADAMS Accession No. ML102460440.

45. U.S. Nuclear Regulatory Commission, “IR 05000083-11-201, on April 4-7, 2011 at University of Florida - Severity Level IV and Notice of Violation,” June 3, 2011, ADAMS Accession No. ML111110367.

46. U.S. Nuclear Regulatory Commission, “IR 05000083-12-201 on January 30 thru February 2, 2012 at the University of Florida - NRC Routine Inspection No. 50-083-12-201,” February 24, 2012, ADAMS Accession No. ML120540013.

47. U.S. Nuclear Regulatory Commission, “IR 05000083/13-201 on February 11-14, 2013, at University of Florida - NRC Routine Inspection Report No. 50-083/2013-201,” March 7, 2013, ADAMS Accession No. ML13056A400.

48. U.S. Nuclear Regulatory Commission, “IR 05000083-14-201 on 03/18-208/2014 at University of Florida - NRC Routine Inspection Report No. 50-083/2014-201,” April 14, 2014, ADAMS Accession No. ML14084A202.

49. U.S. Nuclear Regulatory Commission, “IR 05000083/2015201 and Notice of Violation, June 15-17, 2015, University of Florida,” July 17, 2015, ADAMS Accession No. ML15194A260.

50. U.S. Nuclear Regulatory Commission, “IR 05000083/2016201 - March 7-10, 2016, University of Florida - NRC Routine Inspection Report No. 50-083/2016-201,” April 6, 2016, ADAMS Accession No. ML16095A095.

51. U.S. Nuclear Regulatory Commission, NUREG-1537, Parts 1 and 2, “Guidelines for Preparing and Reviewing Applications for the Licensing of Non-Power Reactors,” February 1996, ADAMS Accession Nos. ML042430055 and ML042430048.

52. U.S. Nuclear Regulatory Commission, SECY-08-0161, “Review of Research and Test Reactor License Renewal Applications,” October 24, 2008, ADAMS Accession No. ML082550140.

53. U.S. Nuclear Regulatory Commission, “Staff Requirements Memorandum for SECY-08-0161,” March 26, 2009, ADAMS Accession No. ML090850159.

54. U.S. Nuclear Regulatory Commission, “Interim Staff Guidance for the Streamlined Research Reactor License Renewal Process,” A. Adams to K. Brock, October 15, 2009, ADAMS Accession No. ML092240256, Attachment 1, ADAMS Accession No. ML092240244.

55. American National Standards Institute/American Nuclear Society, ANSI/ANS-15.1-2007, “The Development of Technical Specifications for Research Reactors.” ANS, LaGrange, Park, IL.

56. University of Florida, “Proposed Amendment 27 - Security Plan,” February 29, 2012, ADAMS Accession No. ML12061A271.

57. U.S. Nuclear Regulatory Commission, “Issuance of Amendment No. 27 to Amended Facility Operating License No. R-56 for the University of Florida,” November 17, 2015, ADAMS Accession No. ML120960586.

58. U.S. Nuclear Regulatory Commission, “Closure of Confirmatory Action Letter No. NRR-04-010 on Site-Specific Compensatory Measures Implementation Plan for the University of Florida Training Reactor,” April 22, 2016, ADAMS Accession No. ML16091A471.

59. University of Florida, “University of Florida, Emergency Plan - Extracted from ML13252A141,” August 31, 2014, ADAMS Accession No. ML16200A378.

60. University of Florida, “University of Florida Operator Requalification and Recertification Training Program Plan,” August 4, 2011, ADAMS Accession No. ML11229A706

61. U.S. Nuclear Regulatory Commission, “University of Florida, Operator Requalification and Program Plan Review,” October 13, 2011, ADAMS Accession No. ML112790003.

62. Osborne, Kenny K. (DOE), email to D. Hardesty (NRC): “University Fuels Support Contracts,” January 15, 2014, ADAMS Accession No. ML14022A268.

63. University of Florida, “University of Florida, Submittal of Revised Chapter 5 of FSAR in Support of Application for License Renewal,” March 26, 2010, ADAMS Accession No. ML100880334.

64. University of Florida, “University of Florida Training Reactor (UFTR) License Renewal [RAI response],” February 26, 2010 ADAMS Accession No. ML100610445.

65. University of Florida, “University of Florida Training Reactor (UFTR) License Renewal - Revised Statement of Intent on Decommissioning Funding Assurance,” May 3, 2010, ADAMS Accession No. ML101250177.

66. U.S. Nuclear Regulatory Commission, “University of Florida - Request for Additional Information RE: Updated Financial Information for License Renewal,” June 9, 2014, ADAMS Accession No. ML13218A048.

67. University of Florida, “University of Florida - Responses to Request for Additional Information Regarding Financial Information,” September 4, 2014, ADAMS Accession No. ML14255A368.

68. University of Florida, “UFTR Supplemental Response to Request for Additional Information,” March 25, 2015, ADAMS Accession No. ML15112A817.

69. University of Florida, “E-mail, D. Cronin (UFTR) to D. Hardesty (NRC), on Pu-Be Source,” October 4, 2016, ADAMS Accession No. ML16278A737.

70. U.S. Nuclear Regulatory Commission, NUREG-1313, “Safety Evaluation Report related to the Evaluation of Low-Enriched Uranium Silicide-Aluminum Dispersion Fuel for use in Non Power Reactors,” July 1988, ADAMS Accession No. ML080950428.

71. SCALE: A Modular Code System for Performing Standardized Computer Analysis for Licensing Evaluations, ORNL/TM-2005/39, Version 6.1, July 2011.

72. Hawkley, S.C., Kathren, R.L., and Robkin, M.A., “Analysis of Credible Accidents for Argonaut Reactors,” NUREG/CR-2079, Pacific Northwest Laboratory, PNL-3691, April 30, 1981, ADAMS Accession No. ML071690021.

73. U.S. Nuclear Regulatory Commission, Regulatory Guide 1.145, “Atmospheric Dispersion Models for Potential Accident Consequence Assessments at Nuclear Power Plants,” Revision 1, February 28, 1983, ADAMS Accession No. ML003740205.

74. U.S. Environmental Protection Agency, Federal Guidance Report No. 11, “Limiting Values of Radionuclide Intake and Air Concentration and Dose Conversion Factors for Inhalation, Submersion, and Ingestion,” EPA-520/1-88-02, 1988.

75. U.S. Environmental Protection Agency, Federal Guidance Report No. 12, "External Exposure to Radionuclides in Air, Water, and Soil," EPA-402-R-93-081, 1993.

76. U.S. Nuclear Regulatory Commission, Regulatory Guide 4.20, “Constraint on Releases of Airborne Radioactive Materials to the Environment for Licensees other than Power Reactors,” Revision 1, April 2012, ADAMS Accession No. ML110120299.

77. Hanna, S.R., Briggs, G.A., & Hosker, R.P. Jr., “Handbook on Atmospheric Diffusion,” DOE/TIC-11223, National Oceanic and Atmospheric Administration, 1982.

78. Homann, S. G. and Aluzzi, F., “HOTSPOT Health Physics Codes Version 3.0 User’s Guide,” National Atmospheric Release Advisory Center, Lawrence Livermore National Laboratory, LLNL-SM-636474, May 2013.

79. University of Florida, “E-mail D. Cronin, UFTR to D. Hardesty, NRC; UFTR_ 30-day ORIGEN Files - basis for response to technical RAI No. 7.a.v (for the 30-day calculations),” November 7, 2016, ADAMS Accession No. ML16312A224.

80. University of Florida, “E-mail D. Cronin, UFTR to D. Hardesty, NRC; I-132 and I-131 ORIGEN 385-day Results - UFTR supplemental basis for technical RAIs,” November 7, 2016, ADAMS Accession No. ML16312A225.

81. DiNunno J.J., et al., “Calculations of Distance Factors for Power and Test Reactor Sites,” Technical Information Document 14844, U.S. Atomic Energy Commission, March 23, 1962, ADAMS Accession No. ML021720780.

82. U.S. Nuclear Regulatory Commission, “Research and Test Reactors Pool Water-Safety Evaluation on Electrolytic Conductivity,” May 11, 2015, ADAMS Accession No. ML15114A433.

83. University of Florida, “ORIGEN, COMPLY and MicroShield results used for MHA and FHA calculations in UFTR FSAR Chapter 13,” March 6, 2017, ADAMS Accession No. ML17065A249.

84. U.S. Nuclear Regulatory Commission, Regulatory Guide 1.111, Revision 1, “Methods for Estimating Atmospheric Transport and Dispersion of Gaseous Effluents in Routine Releases from Light-Water-Cooled Reactors,” July 1977, ADAMS Accession No. ML003740354.

85. U.S. Environmental Protection Agency, “User’s Guide for the COMPLY Code,” Revision 1, October 1989.

86. University of Florida, “Review of Draft R-56 Operating License - UFTR License Renewal,” March 23, 2017, ADAMS Accession No. ML17082A537.

87. Bernadin, J. D. and Mudawar, I., “The Leidenfrost Point: Experimental Study and Assessment of Existing Models,” ASME Journal of Heat Transfer, Vol. 121, November 1999, pp. 894-903.

88. "Chart of Nuclides," Fourteenth Edition, Knolls Atomic Power Laboratories, April 1988.