Westinghouse

Westinghouse Electric Company
Nuclear Power Plants
P.O. Box 355
Pittsburgh, Pennsylvania 15230-0355
USA

U.S. Nuclear Regulatory Commission
ATTENTION: Document Control Desk
Washington, D.C. 20555

Direct tel: 412-374-6206
Direct fax: 724-940-8505
e-mail: sisk1rb@westinghouse.com

Your ref: Docket Number 52-006
Our ref: DCP_NRC_002942

August 12, 2010

Subject: Information on Proposed Changes for the AP1000 Design Control Document Rev. 18

This letter is submitted in support of the AP1000 Design Certification Amendment Application (Docket No. 52-006). The information provided is generic and is expected to apply to all Combined License (COL) applicants referencing the AP1000 Design Certification and the AP1000 Design Certification Amendment Application.

Westinghouse provided preliminary information on changes which it proposed to include in Revision 18 of the AP1000 Design Control Document (DCD-18) in a January 20, 2010 letter (Reference 1). Supplementary information on some of those changes requested by the NRC was provided in a March 12, 2010 letter (Reference 2). Information was provided in an April 26, 2010 letter (Reference 3) for seven of the changes identified in the January 20, 2010 that were determined to meet one or more of the Interim Staff Guidance-11 (ISG-11) criteria for reporting to the NRC staff. The remaining 50 "elective" items in the January 20 letter are addressed in a letter dated May 21, 2010 (Reference 4). In a letter dated May 10, 2010 (Reference 5), information was provided for seven design changes that met one or more of the ISG-11 criteria and which supported the AP1000 Licensing Finalization schedule. In a letter dated May 25, 2010 (Reference 6), information was provided for two additional design changes that met one or more of the ISG-11 criteria and which supported the AP1000 Licensing Finalization schedule. In letters dated June 14, 2010 (Reference 7), June 18, 2020 (Reference 8), July 6, 2010 (Reference 9), July 8, 2010 (Reference 10), July 28, 2010 (Reference 11) July 29, 2010 (Reference 12), and August 13, 2010, (Reference 13) information was provided for additional design changes.

This letter provides information on one additional design change (Change Number 75) which addresses main steam isolation valve sub-compartment pressurization analysis and the corresponding venting capacity. An "NRC Review Package" is provided in Enclosure 1. Revised DCD pages which contain sensitive information are provided in Enclosure 2. Enclosure 2 contains sensitive unclassified non-safeguards information relative to the physical protection of an AP 1000 Nuclear Power Plant that should be withheld from public disclosure pursuant to 10 CFR 2.390(d). Enclosure 3 provides the redacted version (public version) of the information provided in Enclosure 2.

As noted previously, the changes described in this and the referenced letters do not constitute all of the changes which Westinghouse proposes to include in DCD-18. Rather, the changes in this letter are in addition to those which Westinghouse either has submitted or will submit to the NRC as responses to Requests for Additional Information or Safety Evaluation Report Open Items.

D063
NRO

Westinghouse will work with the NRC staff to disposition the changes described in this letter as expeditiously as possible. Questions related to the content of this letter should be directed to Westinghouse. Please send copies of such questions to the prospective COL applicants referencing the AP1000 Design Certification. A representative for each applicant is included on the cc: list of this letter.

Very truly yours,

D. A. Lindgren / FOR

Robert Sisk, Manager
Licensing and Customer Interface
Regulatory Affairs and Strategy

References:

1. DCP_NRC_002744, Re-submittal of Proposed Changes for AP1000 Design Control Document Rev.18, January 20, 2010
2. DCP_NRC_002818, Supplementary Information to DCP_NRC_002744 – Re-Submittal of Proposed Changes for AP1000 Design Control Document Rev.18, March 12, 2010
3. DCP_NRC_002850, Final Information on Proposed Changes for the AP1000 Design Control Document Rev. 18, April 26, 2010
4. DCP_NRC_002874, Final Information on Proposed Changes for the AP1000 Design Control Document Rev. 18, May 21, 2010
5. DCP_NRC_002863, Information on Proposed Changes for the AP1000 Design Control Document Rev. 18, May 10, 2010
6. DCP_NRC_002879, Information on Proposed Changes for the AP1000 Design Control Document Rev. 18, May 25, 2010
7. DCP_NRC_002909, Information on Proposed Changes for the AP1000 Design Control Document Rev. 18, June 14, 2010
8. DCP_NRC_002918, Information on Proposed Changes for the AP1000 Design Control Document Rev. 18, June 18, 2010
9. DCP_NRC_002925, Information on Proposed Changes for the AP1000 Design Control Document Rev. 18, July 6, 2010
10. DCP_NRC_002932, Information on Proposed Changes for the AP1000 Design Control Document Rev. 18, July 8, 2010
11. DCP_NRC_002939, Information on Proposed Changes for the AP1000 Design Control Document Rev. 18, July 28, 2010
12. DCP_NRC_002940, Information on Proposed Changes for the AP1000 Design Control Document Rev. 18, July 29, 2010
13. DCP_NRC_002941, Information on Proposed Changes for the AP1000 Design Control Document Rev. 18, August 13, 2010

/Enclosures

1. AP1000 Main Steam Isolation Valve (MSIV) Compartment Structural Design Information for Change Number 75, NRC Review Package
2. DCD Page Revisions – Security Related Information, Withhold from Public
3. DCD Page Revisions – Public Redacted Version

cc:	B. Anderson	-	U.S. NRC	3E
	D. Jaffe	-	U.S. NRC	3E
	E. McKenna	-	U.S. NRC	3E
	T. Spink	-	TVA	3E
	P. Hastings	-	Duke Energy	3E
	R. Kitchen	-	Progress Energy	3E
	A. Monroe	-	SCANA	3E
	P. Jacobs	-	Florida Power & Light	3E
	C. Pierce	-	Southern Company	3E
	E. Schmiech	-	Westinghouse	3E
	G. Zinke	-	NuStart/Entergy	3E
	R. Grumbir	-	NuStart	3E
	M. Melton	-	Westinghouse	3E

DCP_NRC_002942
August 12, 2010

ENCLOSURE 1

AP1000 Main Steam Isolation Valve (MSIV) Compartment Structural Design Information for Change Number 75, NRC Review Package
Non-Proprietary

AP1000 Main Steam Isolation Valve (MSIV) Compartment Structural Design Information for Change Number 75

NRC Review Package

Table of Contents

1 Background 3

2 Proposed Change 3

3 Proposed DCD Changes and Justification Table 5

4 DCD Markups 7

5 MSIV Sub-Compartment Pressurization Analysis 9

1 Background

There are requirements associated with the east main steam isolation valve (MSIV) subcompartment which have to be met per DCD Tier 2 Section 3.6.1.2.2. The DCD specifies that the subcompartment pressurization must be evaluated for a 1 square foot break in either the main steam (MS) line or main feedwater (MFW) line. The structural design limit of the MSIV rooms for subcompartment pressurization is a differential pressure of 6 psi. As a result of design finalization, recent AP1000 evaluations show that a rupture in the MFW line is bounding relative to a rupture in the MS line. Specifically, the subcompartment pressurization of both the east and west MSIV room resulting from a 1 square foot MFW rupture has been found to be more limiting than a 1 square foot MS line rupture.

This same analysis concludes that a MFW line pipe rupture, without increasing the vent area, would cause the subcompartment pressurization to exceed the 6 psi design pressure limit.

2 Proposed Change

Venting areas have been enlarged for the roof of the Auxiliary Building to meet the requirements in the DCD. These enlarged venting areas, accommodated by a modification of the design of the steam vents at Elevation 153', are shown in the provided figures. There are two doghouse structures on the roof of the Auxiliary Building, one above each of the MSIV compartments. These structures, which house the venting assemblies, will be modified to accommodate the larger venting capacity. Under the approved design revision, each doghouse will be equipped with a 10'-0" x 10'-0" blowout panel and a 6'-0" x 6'-0" louvered vent. The blowout panels will open when necessary to relieve pressure and remain firmly attached to the structure. The vents have louvers that are normally closed, but open when there is a power loss or pressure surge. The increased ventilation capacity added by this design change reduces the pressurization load of the MSIV subcompartments, allowing the 6 psi design criterion to be met with margin. The preliminary analyses for the postulated 1 square foot rupture in the MFW line gives a calculated maximum differential pressure of 4.9 psi, and therefore does not reduce the design margin relative to the previously reported value of 5.35 psi for the MS line rupture.

The roof at the area of these openings is not a Nuclear Island Critical Structural Section. In addition, preliminary structural evaluations have indicated that the proposed layout still meets security and performance requirements. The temperature profiles for rooms in the Auxiliary Building affected by an MS or MFW line break (Rooms 12306, 12406, 12506, 12404, and 12504) stay within the currently defined temperatures in the event of a 1 square foot pipe rupture in either the east or west MSIV subcompartment.

In evaluating the MSIV rooms for subcompartment pressurization, preliminary results

have indicated that a main feedwater line rupture is limiting. This has necessitated a design change to the ventilation system in order to increase vent area on the roof of the auxiliary building. Preliminary calculations have determined the differential pressure of the MSIV room structures for a main feedwater line rupture to be 4.9 psi with the increased ventilation area. Table 6.2.1.2-1 has been modified to include the main feedwater line as a postulated pipe rupture location for the MSIV room, indicating a maximum expected calculated differential pressure of "less than 5.35 psi". Thus the postulated main feedwater line rupture maintains the same margin to the design differential pressure of 6 psi as that for the main steam line rupture in the existing DCD.

The same maximum differential pressure listed for both breaks is consistent with the DCD in not identifying a limiting rupture for the MSIV room. Rather the DCD specifies, in subsection 3.6.1.2.2, that the subcompartment pressurization must be evaluated for a 1 square foot break in either the main steam (MS) line or main feedwater (MFW) line. The value of the main steam line rupture maximum differential pressure in Table 6.2.1.2-1 is also presented as "less than 5.35 psi," consistent with the preliminary status of these results and to avoid potential errors in interpreting the limiting cases when using the table. The increased vent area will decrease the differential pressure from that reported previously for a main steam line rupture, and so while this calculation has not yet been completed, it is expected that it will be less than the prior result of 5.35 psi. The final results for the pipe rupture hazards evaluation, described in DCD subsection 3.6.4.1 and captured as COL information item 3.6-1 in Table 1.8-2 of the DCD, will be presented in the topical reports that address closure of this COL information item.

3 Proposed DCD Changes and Justification Table

ATT	DCD	Title	Reason for Change
			Tier 1
1	Figure 3.3-9 (Enclosure 2, 3)	Nuclear Island Plan View at Elevation 153'-3" and 160'-6"	Doghouse structures on the roof will increase in size to provide additional area to vent a surge in pressure. The structure above west MSIV compartment (adjacent to Column Line Q) will increase in size such that the opening in the roof will increase from 35 SF to 105 SF, and the structure above the east MSIV compartment (adjacent to Colum Line L) will increase from 29 SF to 99 SF. The current steel enclosures with blowout panels and louvers will be deleted. A 10'-0" x 10'-0" blowout panel and 6'-0" x 6'-0" louvered vent will be added to the sides of each doghouse.
2	Figure 3.3-10 (Enclosure 2, 3)	Nuclear Island Plan View at Shield Building Roof	Doghouse structures on the roof will increase in size to provide additional area to vent a surge in pressure. The structure above west MSIV compartment (adjacent to Column Line Q) will increase in size such that the opening in the roof will increase from 35 SF to 105 SF, and the structure above the east MSIV compartment (adjacent to Colum Line L) will increase from 29 SF to 99 SF. The current steel enclosures with blowout panels and louvers will be deleted. A 10'-0" x 10'-0" blowout panel and 6'-0" x 6'-0" louvered vent will be added to the sides of each doghouse.
			Tier 2
1	Figure 3.7.2-12 (Enclosure 2, 3)	Nuclear Island Key Structural Dimensions Plan at Elevation 153'-0" and 160'-6" (Sheets 6, 7, and 12 of 12)	Doghouse structures on the roof will increase in size to provide additional area to vent a surge in pressure. The structure above west MSIV compartment (adjacent to Column Line Q) will increase in size such that the opening in the roof will increase from 35 SF to 105 SF, and the structure above the east MSIV compartment (adjacent to Colum Line L) will increase from 29 SF to 99 SF. The current steel enclosures with blowout panels and louvers will be deleted. A 10'-0" x 10'-0" blowout panel and 6'-0" x 6'-0" louvered vent will be added to the sides of each doghouse.
2	Figure 3H.5-1 (Enclosure 1)	Nuclear Island Critical Sections Plan at El. 180'-0" (Sheet 2 of 3)	Doghouse structures on the roof will increase in size to provide additional area to vent a surge in pressure. The structure above west MSIV compartment (adjacent to Column Line Q) will increase in size such that the opening in the roof will increase from 35 SF to 105 SF, and the structure above the east MSIV compartment (adjacent to Colum Line L) will increase from 29 SF to 99 SF. The current steel enclosures with blowout panels and louvers will be deleted. A 10'-0" x 10'-0" blowout panel and 6'-0" x 6'-0" louvered vent will be added to the sides of each doghouse.

ATT	DCD	Title	Reason for Change
3	Table 6.2.1.3-4 (Enclosure 1)	Main Steam Line Break Mass and Energy (1ft^2 Break)	Table number will be revised from Table 6.2.1.3-4 to Table 6.2.1.3-4a
4	Table 6.2.1.3-4b (Enclosure 1)	Main Feedwater Line Break Mass and Energy (1ft^2 Break)	Table 6.2.1.34b will be added to provide mass and energy data for the Main Feedwater Line.
5	Table 6.2.1.2-1 (Sheet 3 of3) (Enclosure 1)	Listing of Line Not LBB Qualified and the Calculated Maximum Differential Pressures	Two new rows have been added to provide values and references for Main Feedwater Lines A and B for Room 12404 and 12406 respectively. Also, the mass and energy references for Main Steam Lines A and B have been changed to 6.2.1.3-4a. The only updates being made are to add the Main Feedwater Line rupture results and to add "less than" (<) signs to the Main Steam Line values. The results of the Main Steam Line ruptures have not been updated to credit the proposed enlarged vent areas.

4 DCD Markups

See also Enclosures 2 and 3.

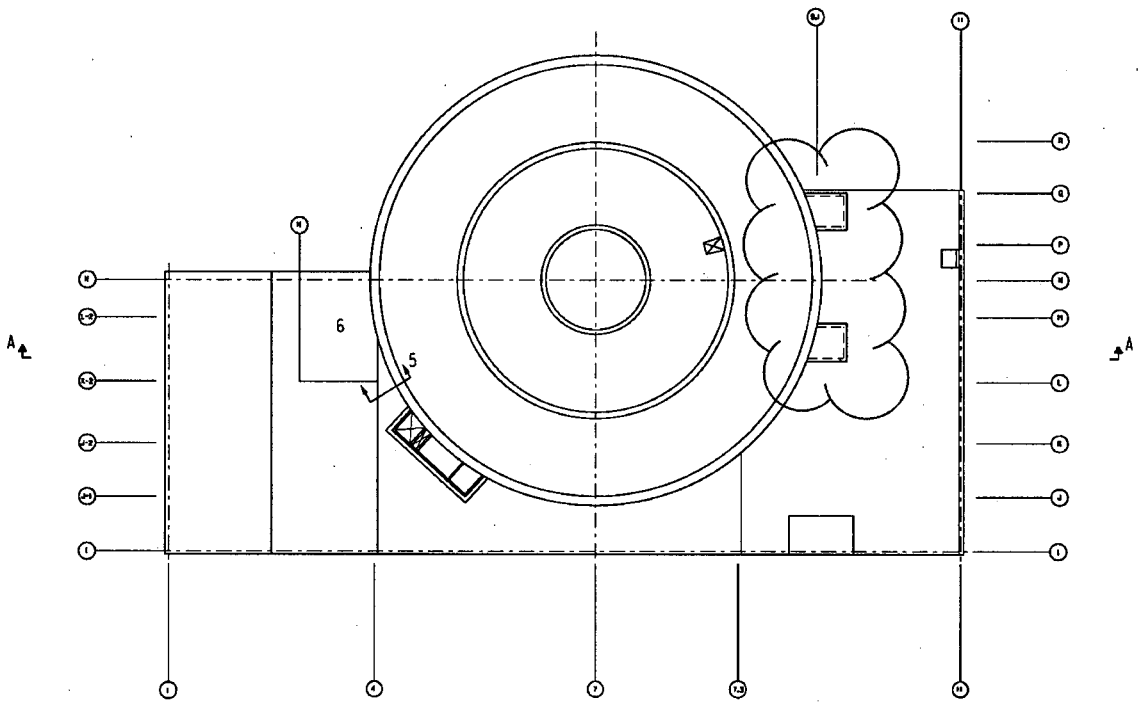

Figure 3H.5-1 (Sheet 2 of 3)

[Nuclear Island Critical Sections Plan at El. 180'-0"]*

5 MSIV Sub-Compartment Pressurization Analysis

Table 6.2.1.3-4a

MAIN STEAM LINE BREAK MASS AND ENERGY (1 FT^2 BREAK)

Time (sec)	Mass (lbm/sec)	Energy (Btu/sec)
0	2300	2734200
1.79	2300	2734200
2.79	6990	4304400
3.79	7350	4410700
4.79	7440	4436500
5.79	7440	4436500
6.79	7390	4420700
7.79	7320	4401500
8.79	7200	4366100
9.79	7060	4325700
10.79	6910	4281400
11.79	6730	4225100
12.79	6580	4180900
13.79	6390	4120300
14.79	6220	4066000
15.79	6070	4017700

Table 6.2.1.3-4b (Sheet 1 of 2)

MAIN FEEDWATER BREAK MASS AND ENERGY (1 FT^2 BREAK)

Time (sec)	Mass (lbm/sec)	Energy (Btu/sec)
0	0	0
0.000115	936.486	392,088.00
0.000255	1,637.35	684,330.00
0.000336	1,926.13	804,176.00
0.000424	2,156.24	899,345.00
0.000722	2,682.14	1,117,480.00
0.001422	4,185.47	1,744,190.00
0.001822	4,930.23	2,054,790.00
0.002322	5,702.67	2,376,970.00
0.002822	6,293.46	2,623,430.00
0.003522	6,855.78	2,858,060.00
0.003722	6,907.82	2,879,820.00
0.011422	6,174.83	2,575,080.00
0.019022	5,604.88	2,337,890.00
0.026722	5,241.14	2,186,920.00
0.034422	5,017.45	2,094,610.00
0.049722	4,723.76	1,974,030.00
0.066922	4,577.53	1,913,790.00
0.075822	5,031.59	2,100,710.00
0.081322	5,194.79	2,167,630.00
0.124622	5,668.85	2,363,150.00
0.140822	5,966.12	2,486,930.00
0.194822	6,744.81	2,812,310.00
0.282122	7,744.00	3,230,820.00
0.341122	8,219.50	3,430,430.00
0.349122	8,366.01	3,491,980.00

Table 6.2.1.3-4b (Sheet 2 of 2)

MAIN FEEDWATER BREAK MASS AND ENERGY (1 FT^2 BREAK)

Time (sec)	Mass (lbm/sec)	Energy (Btu/sec)
0.384122	9,410.57	3,931,650.00
0.404122	9,801.48	4,096,460.00
0.427122	9,932.04	4,151,410.00
0.476122	10,503.20	4,392,440.00
0.510122	10,415.60	4,355,200.00
0.552122	10,679.60	4,466,770.00
0.582128	10,701.70	4,476,089.00
0.692122	10,503.20	4,391,980.00
0.794122	10,241.50	4,281,330.00
0.824122	10,306.30	4,308,690.00
0.880122	10,233.50	4,277,910.00
1.06312	10,485.70	4,384,570.00
1.199122	10,510.20	4,395,237.00
1.29712	10,458.20	4,375,610.00
1.48712	10,299.40	4,356,860.00
1.60412	9,971.98	4,316,330.00
1.65012	9,668.72	4,237,850.00
1.83512	7,790.03	3,576,820.00
1.88112	7,436.50	3,438,490.00
2.02012	6,733.50	3,131,950.00
2.11212	6,553.68	3,048,900.00
3.83512	6,299.88	2,920,880.00
5.00012	6,226.25	2,883,290.00

Table 6.2.1.2-1 (Sheet 3 of 3)

LISTING OF LINES NOT LBB QUALIFIED AND THE CALCULATED MAXIMUM DIFFERENTIAL PRESSURES

AP1000 Room #	Possible[1] Pipe Rupture	Design Differential Pressure (psi)	Maximum Differential[2] Pressure (psi)	Table for M&E Data
11602	20" Main Feedwater 6" Startup Feedwater	5.0	NA NA	NA NA
11603	4" ADS	5.0	NA	NA
11701	None	5.0	NA	NA
11702	None	5.0	NA	NA
11703	4" ADS	5.0	NA	NA
12306	4" SG Blowdown	6.0	5.85	6.2.1.3-5
12404	1 ft^2 Main Steam Line A	6.0	$\leq$ 5.35	6.2.1.3-4a
12406	1 ft^2 Main Steam Line B	6.0	$\leq$ 5.35	6.2.1.3-4a
12404	1 ft^2 Main Feedwater Line A	6.0	$\leq$ 5.35	6.2.1.3-4b
12406	1 ft^2 Main Feedwater Line B	6.0	$\leq$ 5.35	6.2.1.3-4b

Notes:

1. "None" indicates that there are no High Energy Lines >1" in diameter that are not qualified to LBB.
2. Structures are designed to a pressurization load of 5.0 psig except as follows; the CVS room pipe tunnel is designed to a pressurization load of 7.5 psig as discussed in DCD subsection 3.8.3.5; the MSIV rooms are designed to a pressurization load of 6 psig as discussed in DCD subsections 3.8.3.5 and 3.8.4.3.1.4.
3. "NA" indicates that no calculation was performed because no rupture was postulated or that the line was postulated to rupture in a region with a large free volume so compartment differential pressures would be negligible.

DCP_NRC_002942
August 12, 2010

ENCLOSURE 3

DCD Page Revisions

Redacted Version – Withheld Under 10 CFR 2.390

Redacted-Version, Withheld Under CFR 2.390d

SRI

Figure 3.3-9
Nuclear Island Plan View at Elevation
153'-3" and 160'-6"

Redacted-Version, Withheld Under CFR 2.390d

SRI

Figure 3.3-10
Nuclear Island Plan View at Shield Building Roof

Redacted-Version, Withheld Under CFR 2.390d

SRI

Figure 3.7.2-12 (Sheet 6 of 12)

[*Nuclear Island Key Structural Dimensions Plan at El. 153'-0" & 160'-6"*]*

*NRC Staff approval is required prior to implementing a change in this information; see DCD Introduction Section 3.5.

Redacted-Version, Withheld Under CFR 2.390d

SRI

Figure 3.7.2-12 (Sheet 7 of 12)

*[Nuclear Island Key Structural Dimensions Plan at El. 160'-6" & 180'-0"]**

*NRC Staff approval is required prior to implementing a change in this information; see DCD Introduction Section 3.5.

SRI

Figure 3.7.2-12 (Sheet 12 of 12)

[*Nuclear Island Key Structural Dimensions Section J - J*]*

*NRC Staff approval is required prior to implementing a change in this information; see DCD Introduction Section 3.5.