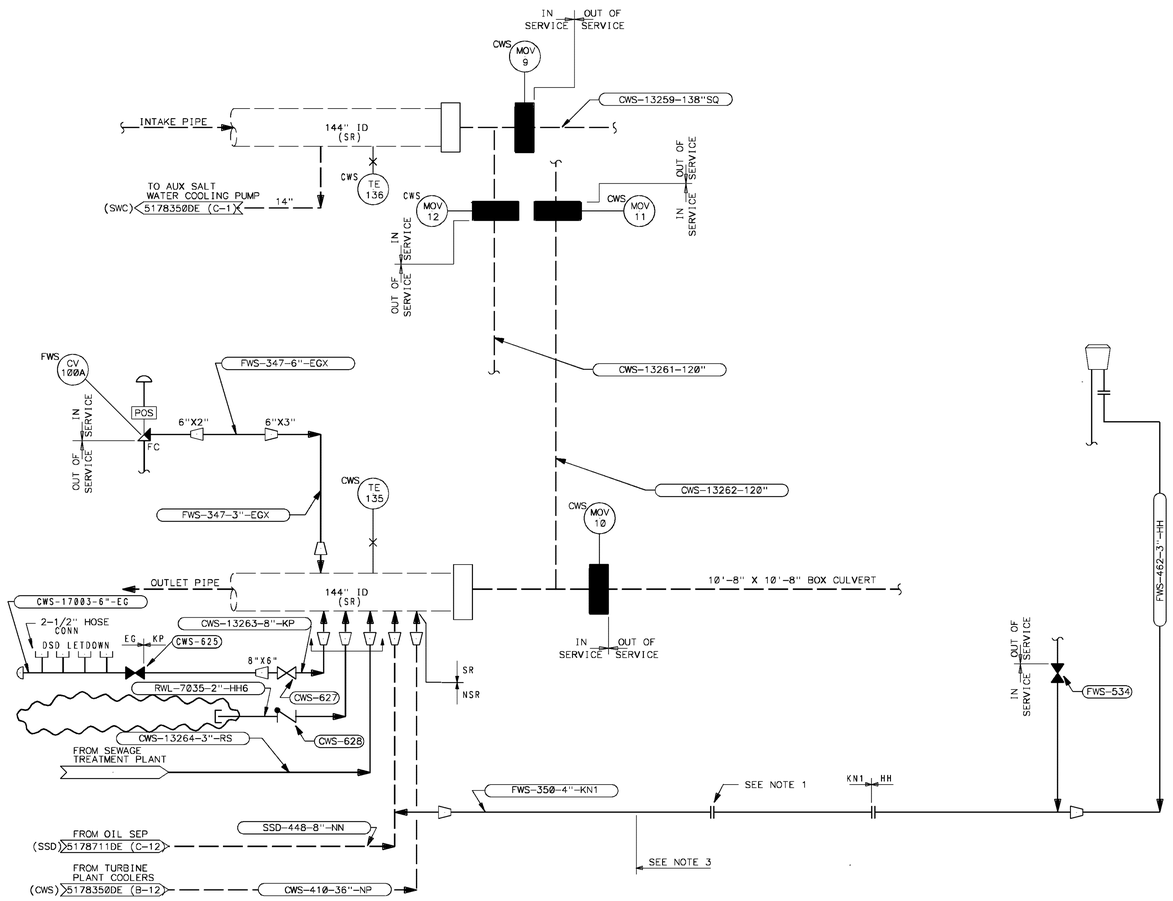

NOTES:

1. INSULATING FLANGE IS DISABLED.
2. SEE DWG 5178331DE FOR SH 2.
3. LINES ORIGINALLY SHOWN ON SUPERSEDED DWG 5178206.

DRAWING NUMBER	DESCRIPTION

NOTES

ENGINEERING CHANGE NOTICE
ECP 041100584-2 REV. 0
IF SUPERSEDING, ARE THE ORIGINAL ECP ASSESSMENTS IMPACTED? ☐ YES ☒ NO
BARONE VINCENT 2/24/2005
PREPARED BY:(ORIGINATOR) DATE:
APPROVAL REQUIRES POS T4EN00 OR T4EN01 FOR FIELD ECN'S QUAL: VIR VERIFIED: INITIALS
DEBOI KRISTI 2/25/2005
VERIFIED BY:(CHECKER/IRE) DATE:
BARONE VINCENT 2/25/2005
APPROVED BY:(PLS) DATE:
APPROVED BY:( ) DATE:

QC SR-AN UNIT 1

SAN ONOFRE NUCLEAR GENERATING STATION

DECOMMISSIONING
P & I DIAGRAM
CIRCULATING WATER SYSTEM SH. 1

SOUTHERN CALIFORNIA EDISON

Scale: NONE DRAWN BY: NGUYEN, L.

M.REVIEW DCMS STATUS = APRV FEBRUARY 24, 2005 12:48 REFERENCES ENGINEERING CHANGE (ECN) A33993

ENGINEERING CHANGE (ECN) A33993 5178330DE REV 0

Site File Copy