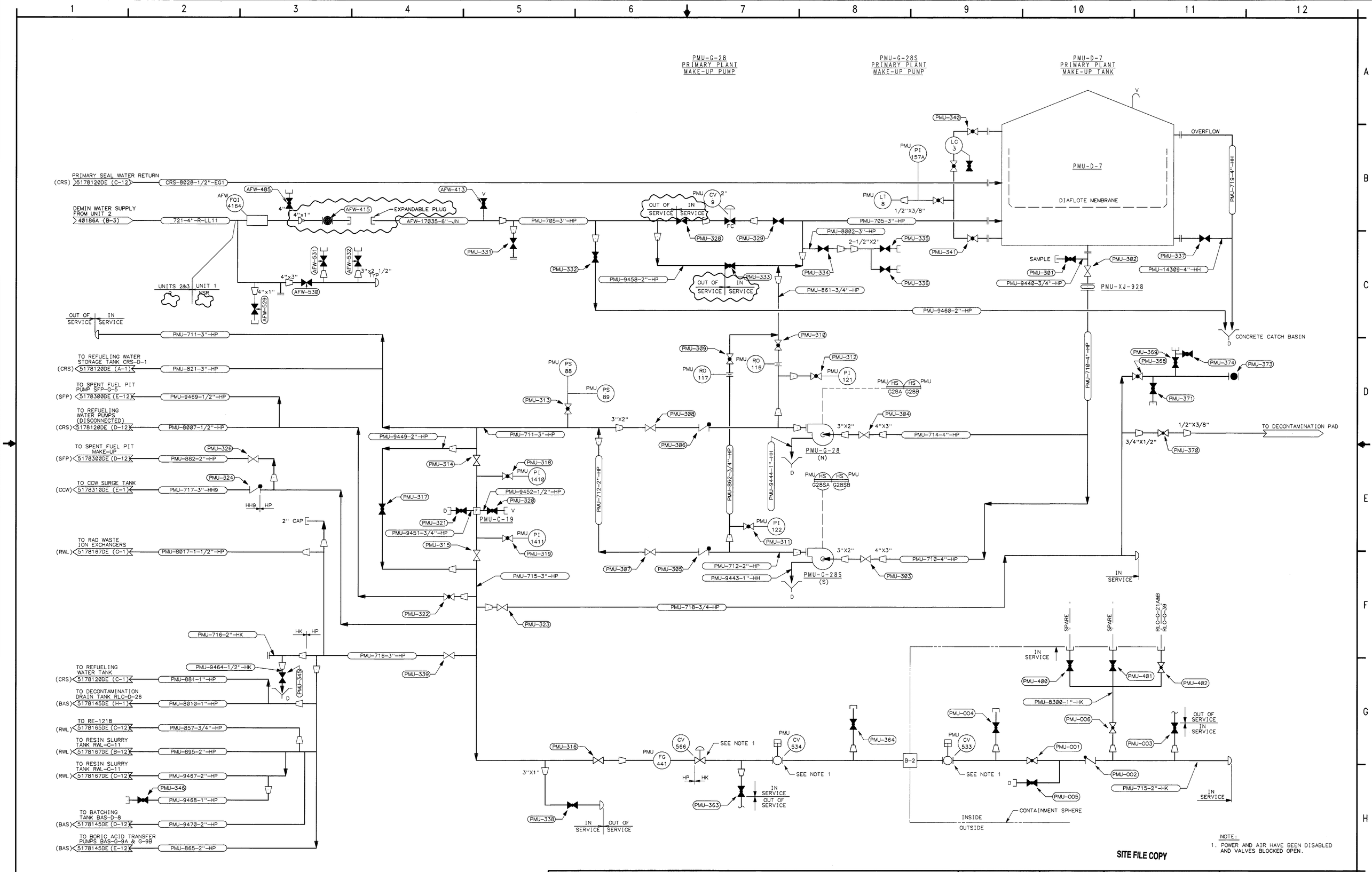

M.REVIEW	DCMS STATUS = APRV MARCH 15, 2005 08:23	DRAWING NUMBER / DESCRIPTION / REFERENCES	NOTES	ENGINEERING CHANGE (ECN) A32342

ENGINEERING CHANGE NOTICE
ECP 041100580-1 REV. 0
IF SUPERSEDING, ARE THE ORIGINAL ECP ASSESSMENTS IMPACTED? ☐ YES ☐ NO
PREPARED BY: (ORIGINATOR) DATE: 3/15/05
APPROVAL REQUIRES POS T4EN90 OR T4EN91 FOR FIELD ECN'S
QUAL. VERIFIED: INITIALS RFA
VERIFIED BY: (CHECKER/IRE) DATE: 3/15/05
APPROVED BY: (FLS) DATE: 3/15/05
APPROVED BY: DATE:

QC NSR UNIT 1
SAN ONOFRE NUCLEAR GENERATING STATION
DECOMMISSIONING
P & I DIAGRAM
PRIMARY PLANT
MAKE-UP WATER SYSTEM
SOUTHERN CALIFORNIA EDISON
Scale: NONE DRAWN BY: NGUYEN, L.

ENGINEERING CHANGE (ECN) A32342 5178370DE REV 2

Amended: June 2010

Site File Copy