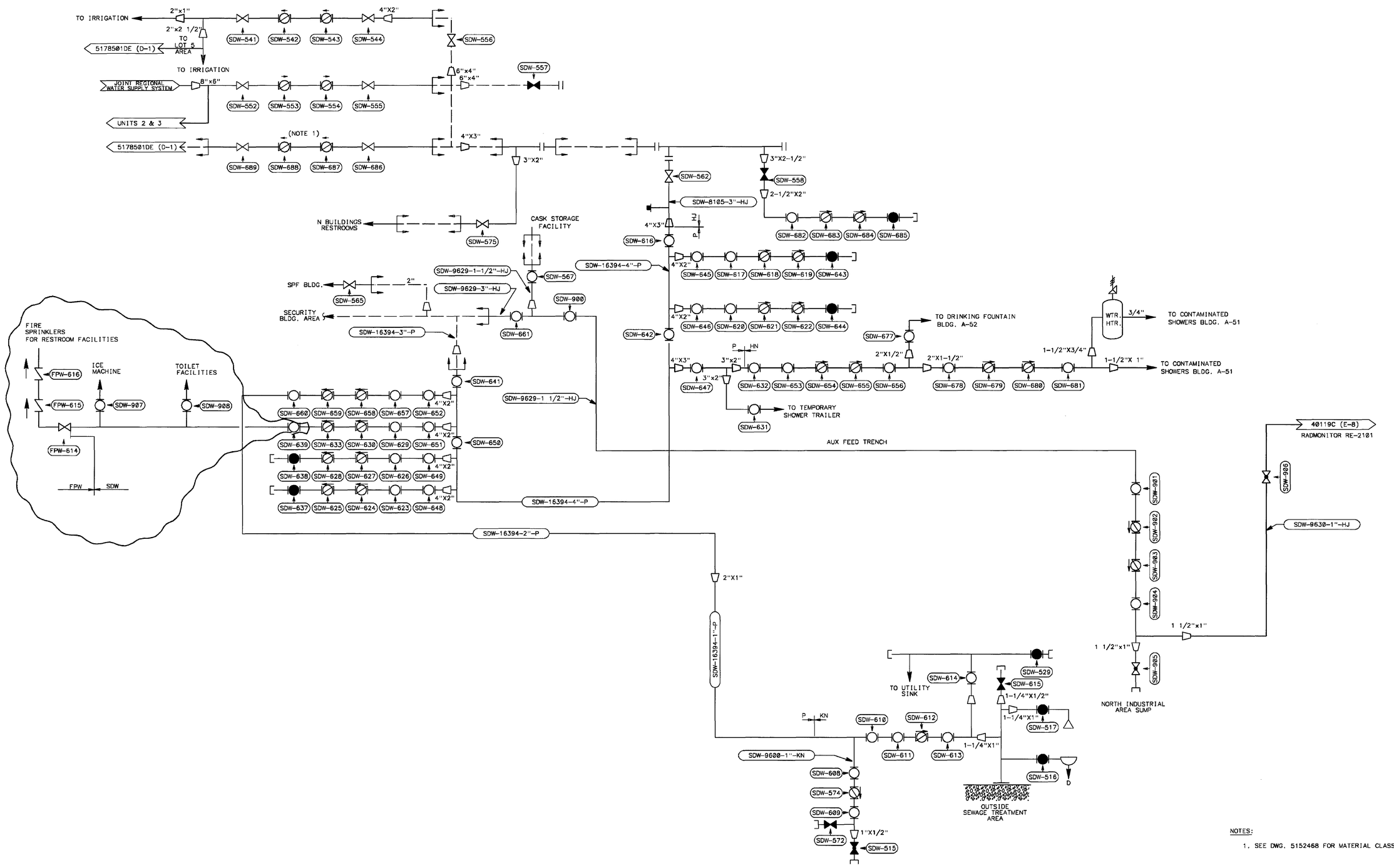

NOTES:

1. SEE DWG. 5152468 FOR MATERIAL CLASSIFICATIONS.

DRAWING NUMBER	DESCRIPTION	NOTES
REFERENCES		

SUPERSEDES A55745

ENGINEERING CHANGE NOTICE
ECP 070200609-1 REV. 0
IF SUPERSEDING, ARE THE ORIGINAL ECP ASSESSMENTS IMPACTED? ☐ YES ☒ NO
ARMOUR,RAYMOND F 4/22/2008
PREPARED BY/DATE:(ORIGINATOR)
APPROVAL REQUIRES POS T4E09 OR T4E09I FOR FIELD ECN'S
CHAN. RFA
VERIF. BY: INITIALS
COUPE,HENRY J 4/22/2008
VERIFIED BY/DATE:(CHECKER/IRE)
BARONE,VINCENT J 4/22/2008
APPROVED BY/DATE:(FLS)
APPROVED BY/DATE:( )

ENGINEERING CHANGE (ECN) A55975

QC NSR UNIT 1

SAN ONOFRE NUCLEAR GENERATING STATION

DECOMMISSIONING
P & I DIAGRAM
SERVICE AND DOMESTIC WATER SYSTEM

SOUTHERN CALIFORNIA EDISON

Scale: DRAWN BY: TYLER, A.J.

M.REVIEW DCMS STATUS = APRV APRIL 22, 2008 10:29

ENGINEERING CHANGE (ECN) A55975 5178382DE REV 4

Amended: June 2010

Site File Copy