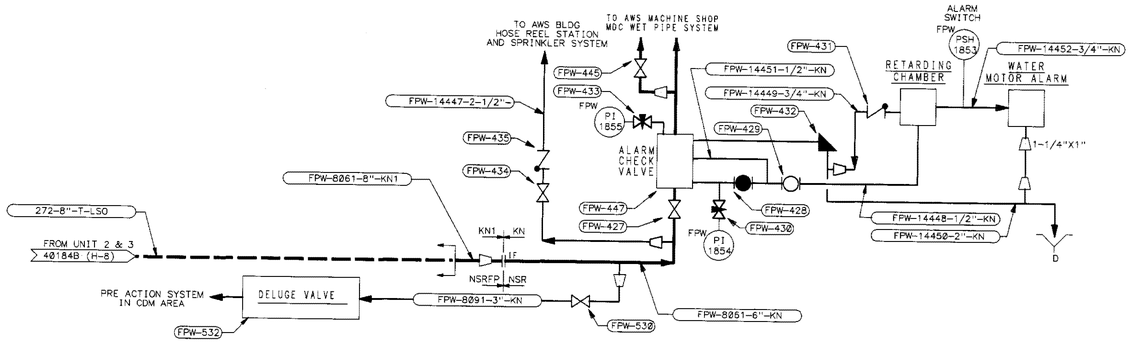

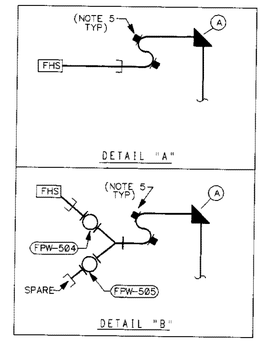

FHS-SCHEDULE
(NOTE 4)

FHS NO	DETAIL NUMBER	"A" VALVE NUMBER	LINE NUMBER
1			
2			
3	—		
4	—		
5	—		
6			
7			
8	A	FPW-459	FPW-862-1-1/2"-KN
9	—		
10	—		
11	—		
12			
13	A	FPW-470	FPW-851-1-1/2"-KN
14			
15			
16	A	FPW-476	FPW-8019-1-1/2"-KN
17	A	FPW-478	FPW-8018-1-1/2"-KN
18	—		
19	—		
20	—		
21	—		
22			
23	—		
24	A	FPW-492	FPW-8049-1-1/2"-KN
26	—		
27	—		
28	—		
29	—		
30	—		
31	GATE VALVE	FPW-451	FPW-8043-3"-LS1

NOTES:

1. ALL HOSE REEL VALVES ARE 1-1/2" UNLESS OTHERWISE NOTED
2. SEE DWG 5178500DE FOR SH 1
3. SEE DWG 5178501DE FOR SH 2
4. FHS- 8, 13, 16, 17 & 24 ARE SHOWN ON DWG 5178500DE AND 5178501DE
5. AUTOMATIC DRAIN CONNECTION
6. INSULATING FLANGE IS DISABLED
7. FIRE SYSTEM IS AVAILABLE IN MANUAL WHILE STATION SERVICE TRANSFORMER NO. 1 IS ENERGIZED

M.REVIEW

DCMS STATUS = APRV JUNE 12, 2003 08:17

DRAWING NUMBER	DESCRIPTION

REFERENCES

NO	DESCRIPTION	RE	IRE	FLS	DM	CHK	OTHER	DATE
2	INCORPORATED DCN #4	RPM					DCMS	08/12/03
1	INCORP. DCN # 1, 2 & 3 AND AS-BUILT CHANGES						DCMS	07/07/01
0	AS BUILT CATIA DWG						DCMS	05/01/00

REVISIONS

QC NSR-FP-EAN UNIT 1

SAN ONOFRE NUCLEAR GENERATING STATION

DECOMMISSIONING
P & I DIAGRAM
FIRE PROTECTION WATER SYSTEM SH. 3

SOUTHERN CALIFORNIA EDISON

Scale: NONE DRAWN BY: NGUYEN, L.

5178502DE REV 2

Site File Copy