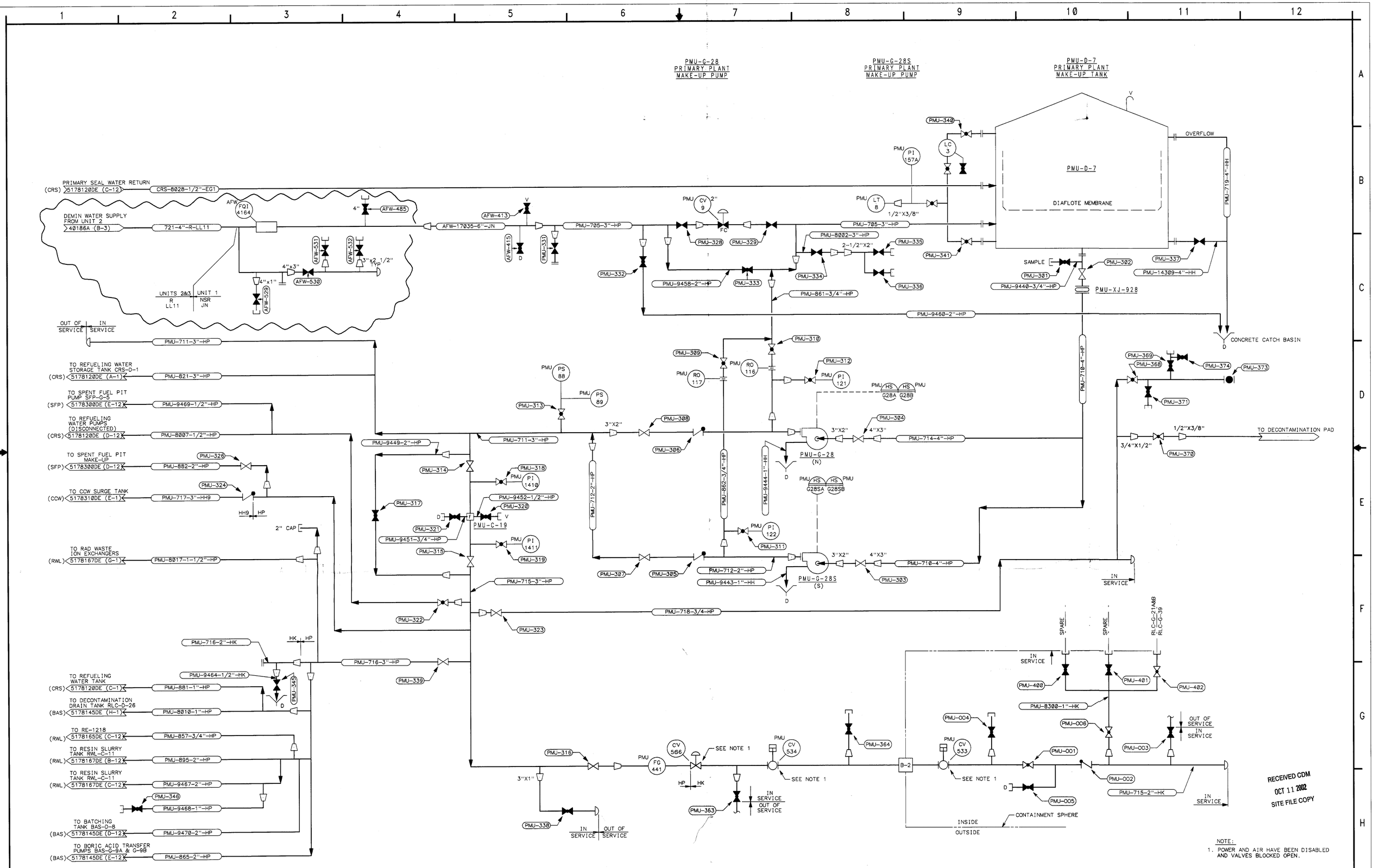

NOTE:
1. POWER AND AIR HAVE BEEN DISABLED AND VALVES BLOCKED OPEN.

RECEIVED CDM
OCT 11 2002
SITE FILE COPY

M.REVIEW	DCMS STATUS = APRV	OCTOBER 3, 2002	07:57

DRAWING NUMBER | DESCRIPTION | NOTES

REFERENCES

ENGINEERING CHANGE NOTICE
ECP 000301540-7 REV. 0
IF SUPERSEDING, ARE THE ORIGINAL ECP ASSESSMENTS IMPACTED? ☐ YES ☐ NO
PREPARED BY(ORIGINATOR) DATE: 10/3/02
VERIFIED BY(VERIFIER) DATE: 11/3/02
APPROVED BY(PE) DATE: 10/10/02
APPROVED BY(C) DATE:

ENGINEERING CHANGE (ECN) A14361

QC NSR — UNIT 1

SAN ONOFRE NUCLEAR GENERATING STATION

DECOMMISSIONING
P & I DIAGRAM
PRIMARY PLANT
MAKE-UP WATER SYSTEM

SOUTHERN CALIFORNIA EDISON

Scale: NONE — DRAWN BY: K. EDWISTEN

ENGINEERING CHANGE (ECN) A14361 — 5178370DE — REV 2