ArevaEPRDCPEm Resource

From: BRYAN Martin (EXTERNAL AREVA) [Martin.Bryan.ext@areva.com]
Sent: Thursday, August 12, 2010 5:54 PM
To: Tesfaye, Getachew
Cc: HAMMOND Philip (AREVA); CORNELL Veronica (EXTERNAL AREVA); BREDEL Daniel (AREVA); COLEMAN Sue (AREVA); NOXON David (AREVA); ROMINE Judy (AREVA); SLAY Lysa (AREVA); SANDERS Harris (AREVA); RYAN Tom (AREVA); WILLIFORD Dennis (AREVA)
Subject: DRAFT Response to U.S. EPR Design Certification Application RAI No. 384, FSAR Ch. 3, Questions 3.8.4.11-14
Attachments: RAI 384 Supplement 7 Response US EPR DC - DRAFT.pdf

Getachew,

Attached are draft responses and associated FSAR markups for Questions 3.8.4.11-14. Let me know if the staff has questions or if these can be sent as final.

Thanks

Martin (Marty) C. Bryan
U.S. EPR Design Certification Licensing Manager
AREVA NP Inc.
Tel: (434) 832-3016
702 561-3528 cell
Martin.Bryan.ext@areva.com

Hearing Identifier: AREVA_EPR_DC_RAIs
Email Number: 1826

Mail Envelope Properties (BC417D9255991046A37DD56CF597DB710732E7D6)

Subject: DRAFT Response to U.S. EPR Design Certification Application RAI No. 384, FSAR Ch. 3, Questions 3.8.4.11-14
Sent Date: 8/12/2010 5:54:10 PM
Received Date: 8/12/2010 5:54:21 PM
From: BRYAN Martin (EXTERNAL AREVA)

Created By: Martin.Bryan.ext@areva.com

Recipients:
"HAMMOND Philip (AREVA)" <Philip.Hammond@areva.com>
Tracking Status: None
"CORNELL Veronica (EXTERNAL AREVA)" <Veronica.Cornell.ext@areva.com>
Tracking Status: None
"BREDEL Daniel (AREVA)" <Daniel.Bredel@areva.com>
Tracking Status: None
"COLEMAN Sue (AREVA)" <Sue.Coleman@areva.com>
Tracking Status: None
"NOXON David (AREVA)" <David.Noxon@areva.com>
Tracking Status: None
"ROMINE Judy (AREVA)" <Judy.Romine@areva.com>
Tracking Status: None
"SLAY Lysa (AREVA)" <Lysa.Slay@areva.com>
Tracking Status: None
"SANDERS Harris (AREVA)" <Harris.Sanders@areva.com>
Tracking Status: None
"RYAN Tom (AREVA)" <Tom.Ryan@areva.com>
Tracking Status: None
"WILLIFORD Dennis (AREVA)" <Dennis.Williford@areva.com>
Tracking Status: None
"Tesfaye, Getachew" <Getachew.Tesfaye@nrc.gov>
Tracking Status: None

Post Office: AUSLYNCMX02.adom.ad.corp

Files	**Size**	**Date & Time**
MESSAGE	393	8/12/2010 5:54:21 PM
RAI 384 Supplement 7 Response US EPR DC - DRAFT.pdf	2587362	

Options
Priority: Standard
Return Notification: No
Reply Requested: No
Sensitivity: Normal
Expiration Date:
Recipients Received:

Response to

Request for Additional Information No. 384, Supplement 7 (4350, 4351, 4469, 4498, 4527), Revision 0

5/20/10

U.S. EPR Standard Design Certification
AREVA NP Inc.
Docket No. 52-020
SRP Section: 03.03.02 - Tornado Loads
SRP Section: 03.04.02 - Analysis Procedures
SRP Section: 03.08.04 - Other Seismic Category I Structures
SRP Section: 03.09.02 - Dynamic Testing and Analysis of Systems Structures and Components
SRP Section: 03.10 - Seismic and Dynamic Qualification of Mechanical and Electrical Equipment

Application Section: FSAR Chapter 3

QUESTIONS for Structural Engineering Branch 2 (ESBWR/ABWR Projects) (SEB2)
QUESTIONS for Engineering Mechanics Branch 2 (ESBWR/ABWR Projects) (EMB2)

DRAFT

Question 3.08.04-11:

Consistent with SRP Section 3.8.4, the applicant has committed to use ANSI/AISC N690-1994, "Specification for the Design, Fabrication and Erection of Steel Safety-Related Structures for Nuclear Facilities," Supplement 2 (S2) based on allowable stress design methodology in the DCD submittal of the debris interceptor design. Regulatory Guide 1.84, Rev. 33, endorses ASME Code Case N-570-2, "Alternative Rules for Linear Piping and Linear Standard Supports for Class 1, 2, 3, and MC Section III, Division 1, Supplement 7," which approves N690-1994 including S2 as an alternative to ASME Code, Section III, Subsection NF. While the use of ANSI/AISC N-690 is acceptable to the staff, this code does not contain explicit guidance regarding the design of linear type supports, which will be employed in the strainer component design.

In its technical report of February 2008 (ANP-10293-U.S. EPR Design Features to address GSI-191) and in its response to NRC question 06.02.02-32 part (a) and (b), the applicant did not provide information regarding the wall and base mat supports and anchorage types, which will be used in the debris interceptor design.

In order for the staff to complete its review and evaluation of the structural integrity of the supports and anchorages as it relates to the abilities of the trash rack, retaining baskets and sump strainers to perform their intended functions, the staff requests that the applicant provide a description of the industry codes and standards applicable to the design and analysis of the supports and anchorages related to the aforementioned seismic category I structures. In addition, the applicant should describe how the structures would be connected and anchored to the concrete walls or base for the retaining baskets and the sump strainer.

The FSAR should be revised to include the response to this RAI.

Response to Question 3.08.04-11:

a) ANSI/AISC N-690 provides guidance for the design of linear type structural steel supports, although it may not explicitly use the term "linear supports". Following are some parallels between N-690 provisions and those of the supports sections of the ASME Code, Section III, Subsection NF::
   - Tension: N-690 Q1.5.1.1 and NF-3322.1(a).
   - Shear: N-690 Q1.5.1.1 and NF-3322.1(b).
   - Compression: N-690 Q1.5.1.3 and NF-3322.1(c).
   - Bending: N-690 Q1.5.1.4 and NF-3322.1(d).
   - Bearing: N-690 Q1.5.1.5 and NF-3322.1(f).
   - Combined Stress: N-690 Q1.6 and NF-3322.1(e).
   - Stability and Slenderness: N-690 Q1.8 and NF-3322.2.

b) The debris interceptor components such as IRWST Retaining Baskets, trash racks, TSP Baskets and Sump Strainers are categorized as Seismic Category I Mechanical components in U.S. EPR FSAR, Tier 1, Table 2.2.2-1. Seismic qualification and installation of these components are covered by ITAAC items 3.3a and 3.3b in U.S. EPR FSAR, Tier 1, Table

DRAFT

2.2.2-3. Because the final design of the anchorages will be completed after the debris interceptor components are procured, ITAAC items 3.3c and 3.3d will be added to U.S. EPR FSAR, Tier 1, Table 2.2.2-3 to cover structural design details and structural evaluation of the components, including the anchorages of the components to the walls or the floor and the attachments of the screens.

Following is a general description of the debris interceptor component anchorages based on the conceptual design. The detailed description of the anchorages final design is covered by ITAAC item 3.3c and 3.3d.

The strainers, trash racks, and retention baskets will be anchored to the basemat at discrete locations using a ball and socket joint, which allows for free rotation to minimize thermal stresses. To further minimize thermal stresses, some of the anchorage points will also allow for sliding in one or two directions. Figure 3.08.04-11-1 illustrates a typical ball and socket joint at an anchorage point that allows for sliding in one direction. Similar configurations are used at anchorages that allow sliding in two directions and at those resisting movement in all three directions.

Each of the four strainers has six such anchorage points mounting the strainer frame to the basemat. Each of the two double compartment retention baskets has four anchorage points mounting the basket frame to the basemat, four anchorage points mounting the frame to the side wall, and two anchorage points mounting the top horizontal cross braces to the side wall. Each of the two single compartment retention baskets has at least eight anchorage points mounting the frame to the basemat and at least ten anchorage points mounting the frame to the two side walls. The anchorages to the side walls are similar to those shown in Figure 3.08.04-11-1. The anchorages are divided between those allowing for zero-, one-, and two-direction movement in a way that minimizes thermal stresses and still allows for the complete transfer of all forces to the concrete elements.

At the typical anchorage illustrated in Figure 3.08.04-11-1, a ball is mounted to a structural element that is part of the bolted assembly of the bottom frame of the strainer or basket. This ball is inserted into the socket of the base and held there by the split ball joint upper flanges that are bolted to the anchorage top plate that contains the socket. The top plate is bolted to the intermediate plate of the anchorage, which is field welded to the embedded plate that is anchored to the concrete by means of headed studs or other similar standard concrete anchors.

c) The following industry codes and standards are applicable to the design and analysis of the supports and anchorages:

   1) Design Properties of Materials: ASME Boiler & Pressure Vessel Code, Section II, Part D, 2004 edition.

   2) Steel Analysis: ANSI/AISC N690-1994,"Specification for the Design, Fabrication, and Erection of Steel Safety-Related Structures for Nuclear Facilities," including Supplement No. 2.

   3) Concrete Anchorages: ACI 349-01/349R-01, "Code Requirements for Nuclear Safety Related Concrete Structures and Commentary."

   4) Damping Values: NRC Regulatory Guide 1.61, "Damping Values for Seismic Design of Nuclear Power Plants," Revision 1, March 2007.

DRAFT

U.S. EPR FSAR Tier 2, Section 6.3 will be revised to add the following paragraphs.

“The debris interceptor components, including trash racks, retention baskets and ECCS strainers, are designed and analyzed per the provisions of ANSI/AISC N690-1994, “Specification for the Design, Fabrication and Erection of Steel Safety-Related Structures for Nuclear Facilities,” including Supplement 2 (S2). The structural qualification of the debris interceptors includes an evaluation of the structural integrity of the supports and anchorages as it relates to the abilities of the trash rack, retention baskets and ECCS strainers to perform their intended function.

The structural design details and structural evaluation of the debris interceptor components, including the anchorages of the components to the walls or the floor and the attachments of the screens, will be provided in a structural evaluation and stress margin report.

The following industry codes and standards are used for the structural qualification of the debris interceptor components.

1) Design Properties of Materials: ASME Boiler & Pressure Vessel Code, Section II, Part D, 2004 edition.
2) Steel Analysis: ANSI/AISC N690-1994,"Specification for the Design, Fabrication, and Erection of Steel Safety-Related Structures for Nuclear Facilities," including Supplement No. 2.
3) Concrete Anchorages: ACI 349-01/349R-01, "Code Requirements for Nuclear Safety Related Concrete Structures and Commentary."
4) Damping Values: NRC Regulatory Guide 1.61, "Damping Values for Seismic Design of Nuclear Power Plants," Revision 1, March 2007.

The debris interceptor components such as IRWST Retaining Baskets, trash racks, TSP Baskets and Sump Strainers are categorized as Seismic Category I Mechanical components in U.S. EPR FSAR, Tier 1, Table 2.2.2-1. These components are covered by ITAAC item 3.3 in U.S. EPR FSAR, Tier 1, Table 2.2.2-3.”

U.S. EPR FSAR Tier 1, Table 2.2.2-3 will be revised to add ITAAC items 3.3c and 3.3d.

FSAR Impact:

U.S. EPR FSAR Tier 1, Table 2.2.2-3 and Tier 2, Section 6.3 will be revised as described in the response and indicated on the enclosed markup.

DRAFT

Figure 3.08.04-11-1—Schematic of Typical Anchorage of Strainer or Basket to Concrete Floor

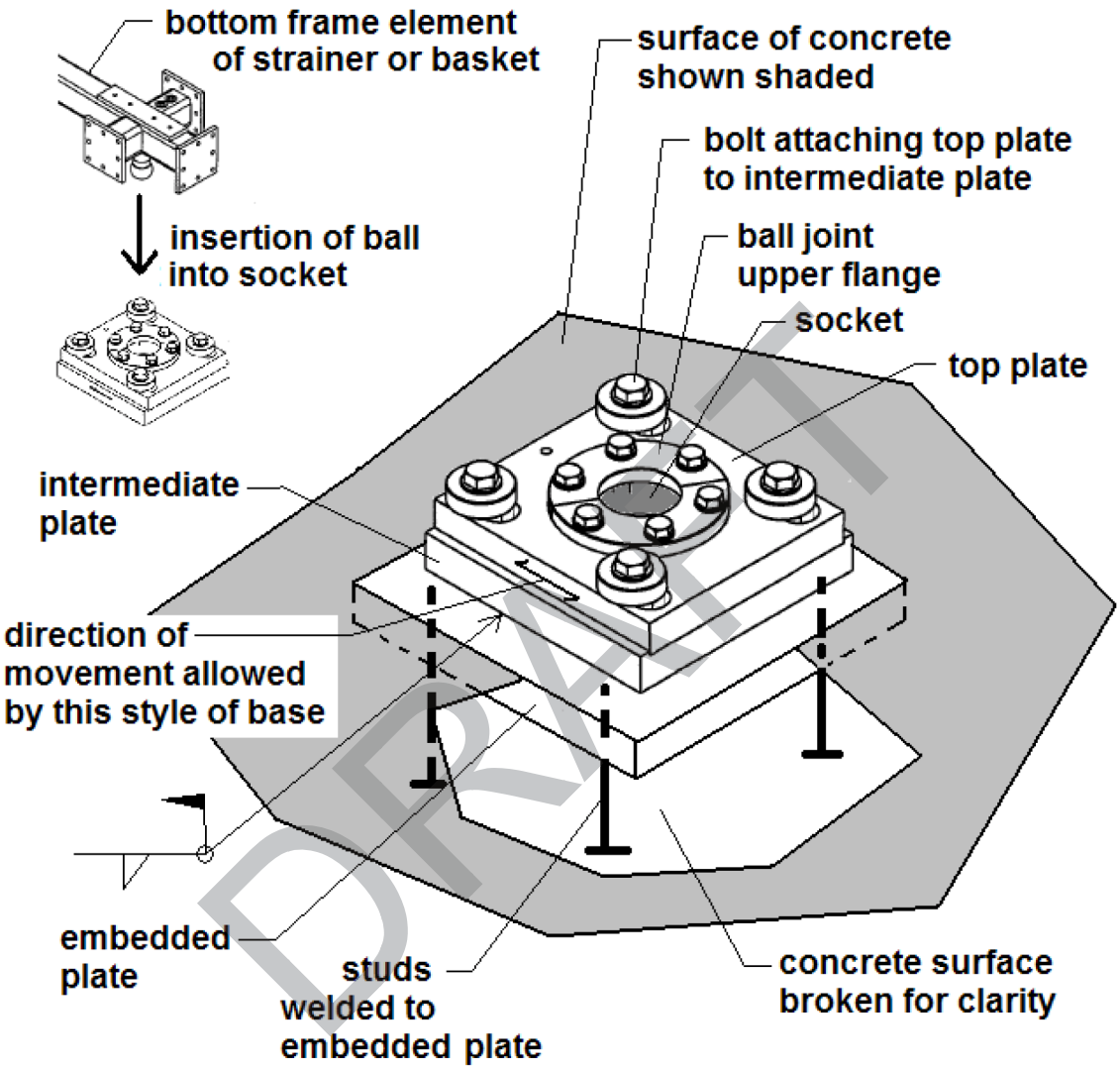

DRAFT

Question 3.08.04-12:

Follow-up to RAI 259, Question 06.02.02-32, Part (a)

The SRP Section 3.8.4, acceptance criteria II.4 requires that the applicant describe the design and analysis procedures used for Seismic Category I structures, assumptions regarding boundary conditions and the extent of compliance with the ANSI/AISC N690-1994. The description should include the expected behavior under applicable loading conditions and the methods by which vertical and lateral loads and forces are transmitted to and from the various elements to their supports and eventually to the foundation of the structure. The applicant should identify the computer programs that will be used to design the structures in accordance with acceptance criteria II.4D. If proprietary computer programs will be used, the applicant shall describe them to the maximum extent practical to establish the applicability of the programs and the method used to validate them.

Regulatory Guide 1.61 also provides guidance regarding damping values that the NRC staff considers acceptable for use in the seismic response analysis of Seismic Category I nuclear power plant structures, systems, and components (SSCs). Tables 1 and 2 of RG 1.61 provides the damping values for safe shutdown earthquake (SSE) and operating basis earthquake (OBE) levels for welded and bolted structures, respectively, which the NRC staff considers acceptable in these analyses.

The applicant in its technical report of February 2008 (ANP-10293-U.S. EPR Design Features to Address GSI-191) and in its partial response to RAI 259, Question 06.02.02-32 lists the load and load combination based on ANSI/ASCE N690-1994. The applicant, however, does not provides sufficient information regarding their structural analysis methodology, damping values, type of steel structures (e.g., welded or bolted), differential pressure loading parameters, and thermal expansion release mechanisms for the debris interceptor structures. Therefore, in order for the staff to complete its review, the staff requests that the applicant provide the following additional information:

a) A description of the methods and methodology which will be used for structural analysis of trash racks, retaining baskets and sump strainers;

b) A description of the damping values, which will be used for the specified type of steel structures, used to construct the trash racks, retaining baskets and sump strainers. If these values are not consistent with the guidance provided in RG 1.61 described above, please provide a justification such that the staff can make a conclusion regarding whether the alternative damping values used provide an adequate level of safety such that the structural integrity of the aforementioned structures is not compromised in a way that inhibits their ability to perform their intended safety functions,

c) A description of the structural elements of the debris interceptor components on which the differential pressure loadings are applied including a discussion of whether the differential pressure loadings will consider credit for the perforated screen surfaces; and,

d) A description of the design features, which may be used to accommodate the thermal expansion movements, associated with the maximum design temperature based on the post-LOCA containment environment and pool temperatures. If none of these features are

DRAFT

included in the design, please confirm that their absence will be acknowledged in the formulation of the loading combinations with respect to the thermal stresses.

The staff needs this information to ensure that the design of the debris interceptor components perform their intended function so the sump pumps can provide adequate cooling water to the core during a design basis accident in accordance with GDC 35. The FSAR should be revised to include the responses to this RAI.

Response to Question 3.08.04-12:

The loading and stress analyses of the retaining baskets, sump strainers and trash racks will be performed using standard structural mechanics equations by hand or spreadsheets, or by commercially available mathematical programs like MathCad. If detailed structural modeling is required, it will be performed using structural and stress analyses programs ANSYS and/or BWSPAN. A description of these programs is provided in U.S. EPR FSAR Tier 2, Section 3.9.1.2. The structural damping for safe shutdown earthquake (SSE) analysis of the retaining baskets, sump strainers and trash racks will be applied according to the guidance of Regulatory Guide 1.61.

a) The basic approach for the double retention baskets is illustrated in Figure 3.08.04-12-1, which illustrates a quadrant of the bottom frame for this basket, and in Figure 3.08.04-12-2, which illustrates a typical filter panel for the wall of this basket.

The following is the general sequence of steps involved in this analysis:

- Assess and calculate all loadings applied to the wire cloth of the filter panels in positive and negative directions. This includes static fluid pressure, as well as dynamic fluid pressure resulting from the seismic acceleration acting on the fluids inside and outside the basket. These loadings are discussed in further detail in subparagraph (c) of this section.
- Calculate stresses in the wires of the wire cloth, modeling it as a two-directional network of tension cable members.
- Calculate reactions at the anchorage points of the wires to the boundary elements of each filter panel. Evaluate this anchorage for these reactions as described in response to RAI 384, Question 3.08.04-14.
- Calculate direct bearing reactions to the inside and outside stiffeners of filter panels and check stresses in these stiffeners acting as flexural members.
- Check stresses in welds between stiffener pairs and between stiffeners and edge frames.
- Check adequacy of connection of inside stiffeners to basket frame members.
- From the preceding loads applied to the basket frame members from the filter panels, follow these loads through their load paths throughout the structure of beams and girders to their culmination points at the anchorage points described in the response to RAI 384, Question 3.08.04-11, calculating axial and shear forces and moments in all of these members. Check the resulting stresses in these members for adequacy.
- Check stresses in all spliced connections between the various weldments of the basket frame.
- Check stresses in the components of all of the anchorages.

DRAFT

The structural analysis of the retention baskets and sump strainers follows the same basic approach. The structural analysis of the trash racks follows a similar approach, except that there is no screen filter and there is no need to consider the submerged fluid pressures discussed below in the response to part (c) of this question.

b) The damping values will be consistent with Regulatory Guide 1.61. The retention basket frames and sump strainer frames use bolted construction, so a value of seven percent of critical damping is used per Regulatory Guide 1.61, Table 1, for "bolted steel with bearing connections." For the trash rack frame, which is fully welded, a value of four percent is used, according to the same table, for welded steel.

c) Figure 3.08.04-12-2 illustrates a typical filter panel for the wall of a double retention basket, and Figure 3.08.04-12-1 illustrates how such panels are configured in the walls and floor of the basket. Panels on the floors, walls, and roofs (as applicable) of the other baskets and sump strainers have a similar layout. The filter panels are the components that receive the direct static and dynamic pressures from the fluids inside and outside the basket. These pressures may be different inside and outside the basket, resulting in differential pressure. All states of pressure loading will be evaluated to determine the maximum value of this differential loading in both the inward and outward direction. The filter panels will then be evaluated for these pressures, with the inside stiffeners assisting in resisting pressures that are directed inward, and the outside stiffeners assisting in the resistance to pressures that are directed outward. If these devices are not plugged with debris, the pressures would be applied only on the exposed area of the wire cloth mesh. However, if functional testing reveals that these devices will be plugged with debris, then no reduction for the open area will be considered, and the pressures will be applied to the full area that is bounded by the plane of the wire cloth mesh.

d) Each of the debris interceptors is comprised of components that are fabricated from the same material, so if they were located in position without anchorage to the surrounding building, they would exhibit unrestrained growth without thermal stress when exposed to the higher temperature of the LOCA environment. To transfer their applied loads to the concrete structure, the debris interceptors are anchored to the surrounding building in some directions. However, as noted in response part (b) to RAI 384, Question 3.08.04-11, the anchorages have been configured to provide unlimited rotation in all directions and to provide translational movement in some directions at some locations, in order to limit the restraint to thermal growth during the temperature rise. This required restraint will still result in some thermal stress within the components of the debris interceptors. This stress will be accounted for in the analysis of these components.

The detailed description of the structural design and analysis of the debris interceptor components will be provided in the structural evaluation and stress margin report per the ITAAC items added in the response to RAI 384, Question 3.08.04-11.

DRAFT

Figure 3.08.04-12-1—Quadrant of Floor of Double Retention Basket

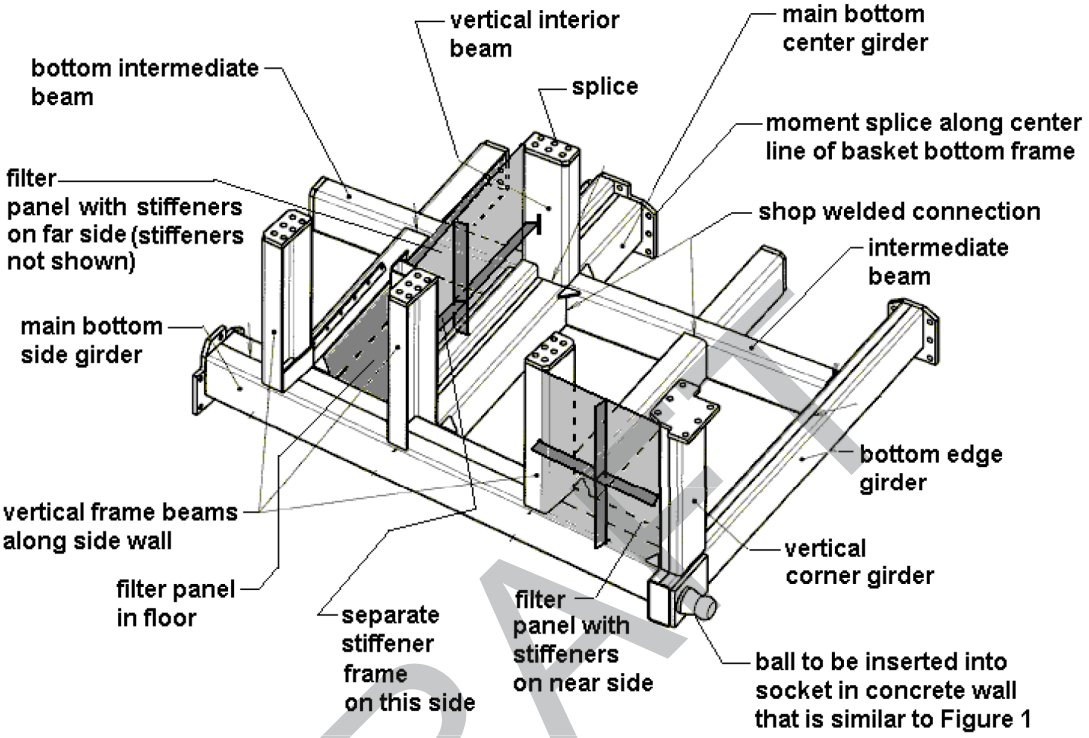

DRAFT

Figure 3.08.04-12-2—Typical Filter Panel for Side Wall of Basket

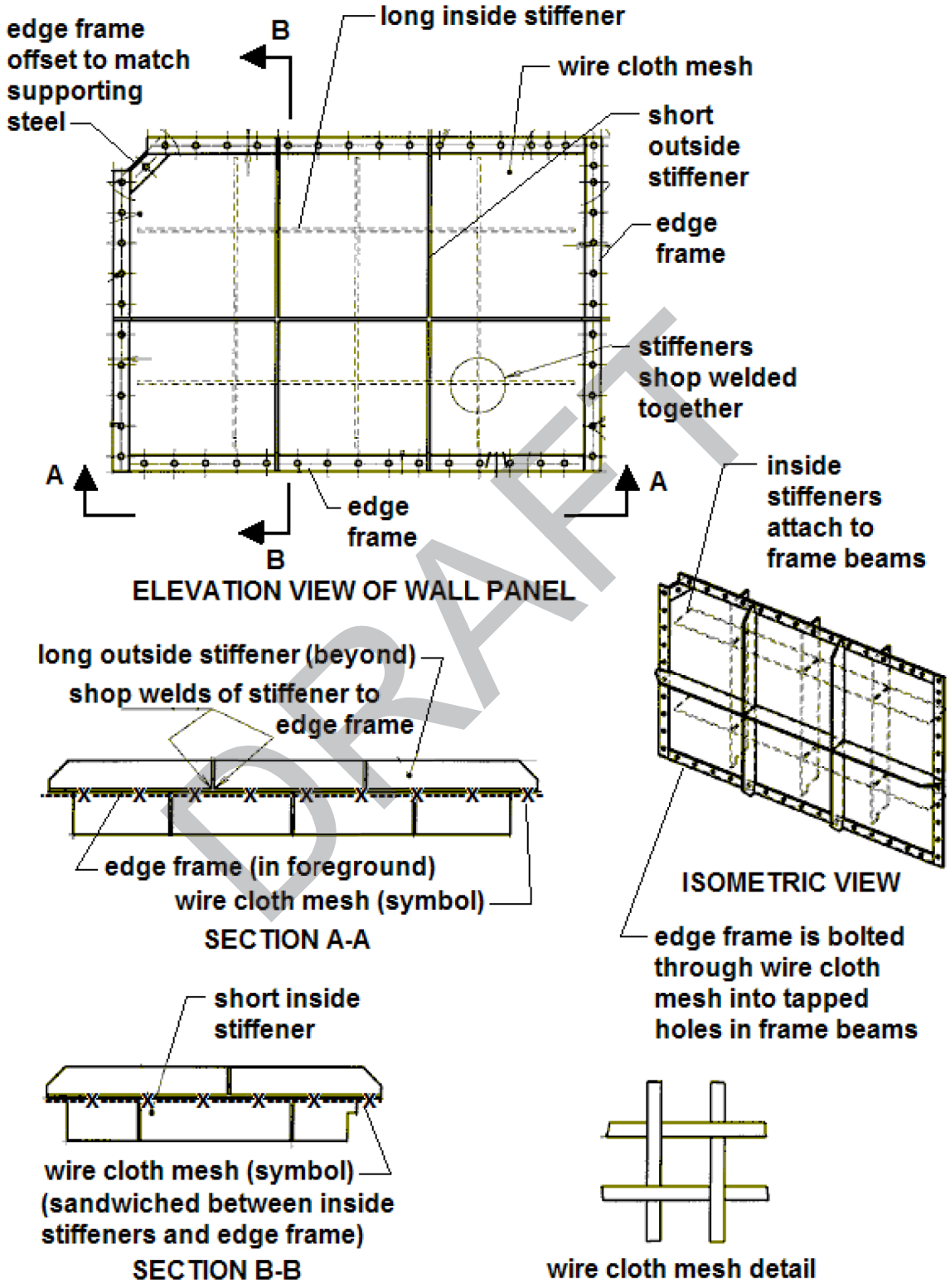

DRAFT

FSAR Impact:

The U.S. EPR FSAR will not be changed as a result of this question.

DRAFT

Question 3.08.04-13:

Follow-up to RAI 259, Question 06.02.02-32, Part (b)

In response to part (b) of question 06.02.02-32, the applicant refers to part (a) which does not clearly address the GL 2004-02 (3k) issue. In order to determine whether the design parameters of the trash racks, retaining baskets and sump strainers are assumed adequately, and the structures will perform their intended functions, the staff requests the following information:

a) Summarize the structural qualification results and design margins for the various sump debris interceptors, and

b) Identify structures considered for analysis for structural qualification purposes under the design loads and design temperature.

Alternatively, provide a COL information item or an ITAAC that addresses these requirements.

The staff needs this information to make its safety conclusions about whether the design parameters of trash racks, retaining baskets and sump strainers are assumed adequately, and the structures will perform their intended functions. The FSAR should be revised to include the responses to these RAIs, as appropriate.

Response to Question 3.08.04-13:

a) The structural qualification results and design margins for the debris interceptor components will be provided in the structural evaluation and stress margin report per the ITAAC items added in the response to RAI 384, Question 3.08.04-11.

b) The debris interceptor components including the trash racks, sump strainers and double and single compartment retention baskets will be structurally qualified using analysis. The analysis will demonstrate the structural qualification of the main girders, intermediate beams, stiffeners, wire cloth, bolts, connecting welds and other components that are part of the load bearing structures.

FSAR Impact:

The U.S. EPR FSAR will not be changed as a result of this question.

DRAFT

Question 3.08.04-14:

The SRP Section 3.8.4, I.4 requires that the applicant describe the design and analysis methods, assumptions regarding boundary conditions and the extent of compliance with the AISC specifications for steel structures. The description should include the expected behavior under load and the mechanisms of load transfer from the various elements to their supports and to the foundations. The applicant should reference computer programs to permit identification with available published programs and describe proprietary computer programs to the maximum extent practical to establish the applicability of the programs and the method used to validate them.

The integrity of the containment emergency sump pumps depends on the integrity and strength of the screens attached to the steel structural elements. These screens must withstand the design basis loads and transfer of loads to the vertical and lateral support elements especially during LOCA or SSE events thus avoiding the development of potential gaps between the screen and the steel structures and breaches in the screens.

The applicant in its technical report of February 2008 (ANP-10293-U.S. EPR-Design Features to Address GSI-191) does not address the design of joints and attachment of the screens to the structural steel members. Therefore, the staff requests that the applicant:

a) Describe the design of the joint and attachments of the screen, and how the screens are attached to the sump strainer to preclude the possibility of debris bypassing the screening, and

b) Provide a justification for assuming that the screens will remain undamaged and there will be no gaps and breaches between the screens and the structural members of the debris interceptor components, such that the operability of the recirculation core-cooling sump pump is not affected during LOCA or SSE events.

The staff needs this information to make its safety conclusions about whether the design of the joints and attachments of the screens to the debris interceptor structural components is adequate to ensure sufficient cooling of the core during design basis accidents. The FSAR should be revised to include the responses to this RAI.

Response to Question 3.08.04-14:

Design and analyses methods are addressed in the Responses to RAI 384, Questions 3.08.04-11, 3.08.04-12, and 3.08.04-13. The analytical methodology is discussed in the Response to Question 3.08.04-12, Part (a). Boundary conditions are addressed in the Response to Question 3.08.04-11, Part (b), and in the Response to Question 3.08.04-12, Part (d). The application of software is addressed in the first paragraph of the Response to Question 3.08.04-12.

The connections between the various structural elements of the devices are standard structural connections, which are validated by analysis. The styles of these connections are presented in Figures 3.08.04-11-1, 3.08.04-12-1, and 3.08.04-12-2 and have been discussed in the methodology presented in the Response to Question 3.08.04-12, Part (a).

DRAFT

Figure 3.08.04-14-1 illustrates a representative design of the connection of the wire cloth to the boundary elements corresponding to a filter panel. This figure is from a model having its various components cut away for clarity and does not reflect the continuity of these components that would occur in the actual device.

The detailed description of the structural design and analysis of the debris interceptor components, including the justification of the structural integrity of the connections such that there are no gaps and breaches between the screens and the structural members of the debris interceptor components, will be provided in the structural evaluation and stress margin report per the ITAAC items added in the Response to RAI 384, Question 3.08.04-11.

Figure 3.08.04-14-1—Attachment of Wire Cloth to Boundary of Panel

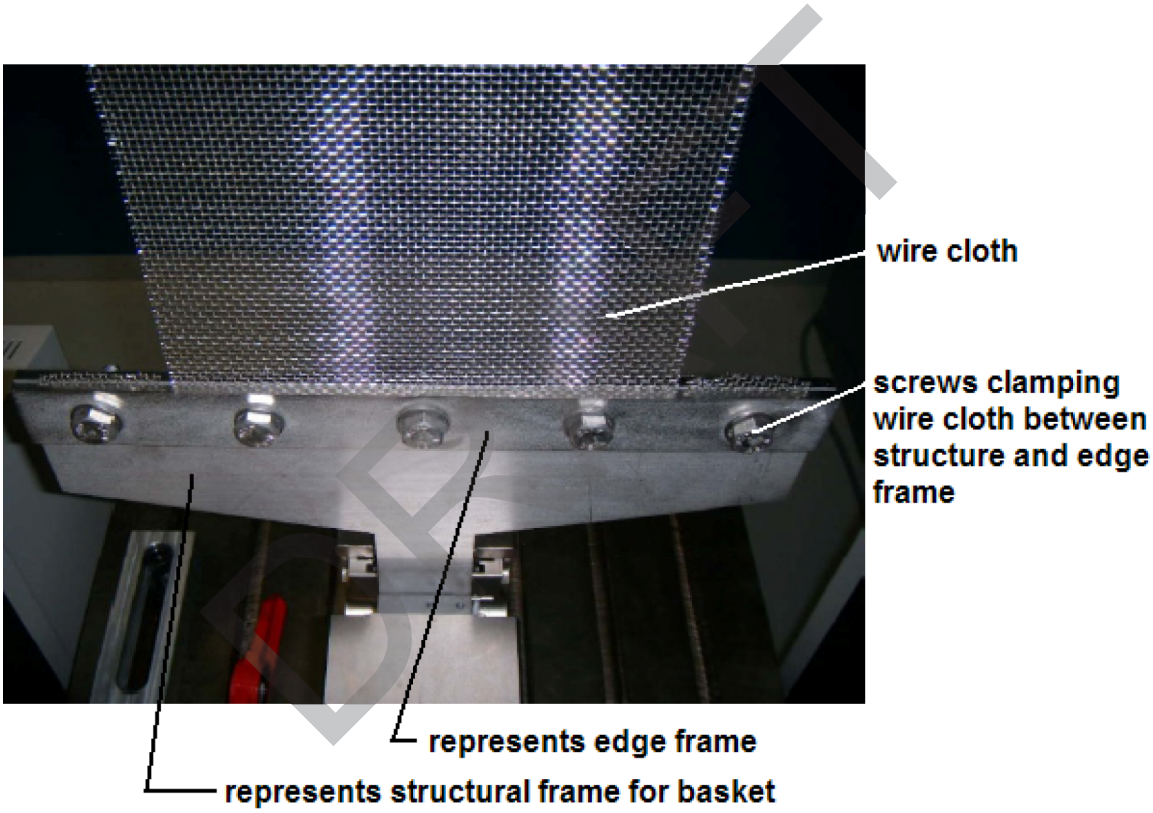

FSAR Impact:

The U.S. EPR FSAR will not be changed as a result of this question.

U.S. EPR Final Safety Analysis Report Markups

DRAFT

Table 2.2.2-3—In-Containment Refueling Water Storage Tank System ITAAC (8 Sheets)

Commitment Wording		Inspections, Tests, Analyses	Acceptance Criteria
		b. Inspections will be performed of the Seismic Category I components identified in Table 2.2.2-1 to verify that the components, including anchorage, are installed as specified on the construction drawings and deviations have been reconciled to the seismic qualification reports (SQDP, EQDP, or analyses).	b. Inspection reports exist and conclude that the Seismic Category I components identified in Table 2.2.2-1, including anchorage, are installed as specified on the construction drawings and deviations have been reconciled to the seismic qualification reports (SQDP, EQDP, or analyses).
	03.08.04-11	c. An analysis of the structural evaluation and design margins report for the Seismic Category I IRWST debris interceptor components and TSP baskets identified in Table 2.2.2-1, including the anchorages of the components to the walls or the floor and the attachments of the screen, will be performed.	c. The structural evaluation and design margins report confirms that the as-designed Seismic Category I IRWST debris interceptor components and TSP baskets identified in Table 2.2.2-1, including the anchorages of the components to the walls or the floor and the attachments of the screens, are structurally qualified.
		d. Inspection will be performed of the Seismic Category I IRWST debris interceptor components and TSP baskets identified in Table 2.2.2-1 to verify that the components, including their anchorages to the walls or the floor and the attachments of the screens, are installed as specified on the construction drawings and deviations have been reconciled to the structural evaluation and design margins report.	d. Inspection reports exist and conclude that the Seismic Category I IRWST debris interceptor components and TSP baskets identified in Table 2.2.2-1, including the anchorages of the components to the walls or the floor and the attachments of the screens, are installed as specified on the construction drawings and deviations have been reconciled to the structural evaluation and design margins report.

DRAFT

changes in analytical inputs or assumptions, or other activities that could introduce debris or potential debris sources into containment.

- Controls on the introduction of coating materials into containment and to address deficiencies of coating materials used in containment.

Coolant pH adjustment baskets containing granulated trisodium phosphate dodecahydrate (TSP-C) are strategically placed in the inlet flow path to the IRWST within the boundary perimeter of the weirs at the four heavy floor openings of the RB. Flow through the baskets dissolves the TSP-C into the coolant that returns to the IRWST to passively neutralize entrained acids and maintain the alkalinity of the coolant. The pH of the recirculated coolant is maintained above 7.0. The control of pH in the recirculated coolant reduces the potential for stress-corrosion cracking of the austenitic stainless steel components, limits the generation of hydrogen attributable to corrosion of containment metals, and minimizes the re-evolution of iodine in post-LOCA containment solution, maintaining the radioiodine in solution to reduce radioactive releases to the environment. The minimum amount of granulated TSP-C for this pH control is 12,200 lb_m. Section 15.0.3.12 provides an evaluation of post-accident water chemistry control.

The IRWST is connected to the molten core spreading area by pipes that are closed during normal operation and accident conditions. If a severe accident occurs and molten material reaches the spreading area, an actuation device melts, flooding valves open, and IRWST water flows into the spreading area to support the operation of the SAHRS. The IRWST is located at a higher elevation than the core spreading area to provide gravity flooding of the spreading area with the IRWST water inventory. The core spreading area and the SAHRS are described in Section 19.2.3.3.

03.08.04-11

The debris interceptor components, including trash racks, retention baskets and ECCS strainers, are designed and analyzed per the provisions of ANSI/AISC N690-1994, "Specification for the Design, Fabrication and Erection of Steel Safety-Related Structures for Nuclear Facilities," including Supplement 2 (S2). The structural qualification of the debris interceptors includes an evaluation of the structural integrity of the supports and anchorages as it relates to the abilities of the trash rack, retention baskets and ECCS strainers to perform their intended function.

The structural design details and structural evaluation of the debris interceptor components, including the anchorages of the components to the walls or the floor and the attachments of the screens, will be provided in a structural evaluation and stress margin report.

The following industry codes and standards are used for the structural qualification of the debris interceptor components.

DRAFT

03.08.04-11

1. Design Properties of Materials: ASME Boiler & Pressure Vessel Code, Section II, Part D, 2004 edition.

2. Steel Analysis: ANSI/AISC N690-1994,"Specification for the Design, Fabrication, and Erection of Steel Safety-Related Structures for Nuclear Facilities," including Supplement No. 2.

3. Concrete Anchorages: ACI 349-01/349R-01, "Code Requirements for Nuclear Safety Related Concrete Structures and Commentary."

4. Damping Values: NRC Regulatory Guide 1.61, "Damping Values for Seismic Design of Nuclear Power Plants," Revision 1, March 2007.

The debris interceptor components such as IRWST Retaining Baskets, trash racks, TSP Baskets and Sump Strainers are categorized as Seismic Category I Mechanical components in U.S. EPR FSAR, Tier 1, Table 2.2.2-1. These components are covered by ITAAC item 3.3 in U.S. EPR FSAR, Tier 1, Table 2.2.2-3.

6.3.2.3 Applicable Codes and Classifications

The SIS design complies with applicable industry codes and standards, and regulatory requirements, commensurate with the appropriate safety function for each of the individual components. Refer to Section 3.2 for seismic and system quality group classifications for the SIS components. Sections 3.9, 3.10, 3.11, 7.3, and 8.1.4 further address these requirements and their implementation for the U.S. EPR.

6.3.2.4 Material Specifications and Compatibility

Material selection for the SIS is based on the expected service conditions for the various components, the design life of the unit, and the materials strength and service requirements as further described in Section 3.9.3. SIS components that transport or come into contact with borated water, which are the majority of the pressure retaining, fluid bearing components, are constructed of austenitic stainless steel. The specific materials of construction for the SIS and their compatibility with system fluids are described in Section 6.1.1.

6.3.2.5 System Reliability

The instrumentation and controls (I&C) that initiate the SIS and are used to manage its operation are separated. They are independently powered from the same normal and emergency sources that power the associated motive equipment of the train. The process variables for the I&C, such as RCS pressure and pressurizer level, derive their input from independent sources. The design of the SIS I&C, including its quality, redundancy, and protection against the effects of single failure, is presented in Section 7.3.

DRAFT