UNITED STATES
NUCLEAR REGULATORY COMMISSION
REGION II
245 PEACHTREE CENTER AVENUE NE, SUITE 1200
ATLANTA, GEORGIA 30303-1257

August 12, 2010

EA-10-124
EN 45655

Mr. Cary Alstadt
Manager, Columbia Plant
Westinghouse Electric Company
Commercial Nuclear Fuel Division
5801 Bluff Road, Drawer R
Columbia, SC 29250

SUBJECT: NRC SPECIAL INSPECTION REPORT NO. 70-1151/2010-001

Dear Mr. Alstadt:

This refers to the onsite inspections conducted February 1-5, 2010 and April 19-22, 2010, and subsequent in-office review of your causal analysis documentation. The special inspection team was established to assess the facts and circumstances surrounding the overflow of approximately 200 gallons of uranium bearing, ammoniated waste water in the quarantine tank (Q-Tank) system, which resulted in airborne ammonia concentrations greater than the intermediate consequence level of 150 parts per million (ppm) on January 24, 2010. The preliminary results of this inspection were discussed with you and members of your staff on June 7, 2010, and in a subsequent teleconference conducted on July 1, 2010.

The inspection was performed in accordance with Inspection Procedure 93812, "Special Inspection," Inspection Procedure 88020, "Operational Safety," and Inspection Procedure 88003, "Reactive Inspection for Events at Fuel Cycle Facilities." The objectives of the inspection were to: 1) review the facts surrounding the spill of 200 gallons of uranium bearing ammoniated waste water on January 24, 2010; 2) assess your staff's response and investigation of the event; and 3) evaluate your immediate and long term corrective actions to prevent recurrence. The inspection examined activities conducted under your license as they relate to safety, compliance with the Commission's rules and regulations, and with the conditions of your license. The team reviewed selected procedures and records, conducted field walk downs and interviewed personnel. A copy of the special inspection team (SIT) charter is included as Enclosure 1. Enclosure 2 is the special inspection team report.

On January 24, 2010, at 2:22 a.m., Q-Tank V-116A overflowed approximately 200 gallons of uranium bearing ammoniated waste water into a diked area below the Q-Tank system. These borosilicate glass Raschig Ring containing Q-Tanks provide the final holdup of ammoniated wastewater prior to the final filtration before the waste water is transferred to the outside treatment facility. The waste water that overflowed into the diked area contained approximately 20 parts per million (ppm) uranium.

Shortly before the Q-Tank overflow, a control room operator had restarted Conversion Line 3, which resulted in a momentary increase in uranium concentration that was detected by an inline gamma monitor. The system realigned, as designed, to the recycle mode as a result of the momentary measured increase in uranium concentrations. While operating in recycle mode, pump P-116-A, the transfer pump for Q-Tank V-116, tripped and level in Q-Tank V-116A increased and eventually overflowed.

The overflow event was preceded by a spurious activation of the outside criticality accident alarm system at 11:21 p.m. on January 23, 2010, which was not deactivated until 5:37 a.m. on January 24, 2010, approximately six hours after it began. This alarm sounded inside the Conversion Area Control Room and served as a distraction to plant personnel who failed to identify the alarm as a criticality alarm. Plant personnel incorrectly identified the alarm as a gamma monitor alarm associated with the ammoniated waste water monitoring system. The failure of the control room operators and Incident Commander to identify the alarm inside the Conversion Area Control Room as a criticality alarm resulted in no evacuation being ordered as required by Site Emergency Plan Procedure Form-001-5, “Criticality Accident”, Revision 5.

Your staff conducted a root cause analysis on the criticality alarm system activation which identified the root causes of inadequate system design and operator response training and a contributing cause associated with a lack of performance management process for the incident commander and emergency director positions. In addition, an apparent cause analysis was conducted on: (1) the causes of the Q-Tank overflow, (2) the causes of apparent weakness of the process hazard analyses which was incorporated into the independent safety analysis, and (3) the incident command response. The NRC team concluded that your root cause analysis was complete and identified the appropriate causal factors for this event. However, two of the three apparent causes failed to identify important factors which contributed to the event and required corrective actions. Of note was that the NRC team identified that ammoniated spills were not uncommon at your facility and your staff may not have developed comprehensive corrective actions for those earlier spills because of the perceived low risk. This was of particular concern since that the actual airborne ammonia concentrations that resulted from this spill were higher than calculated in your original process hazard analyses. As you implement corrective actions from this event, we will be particularly interested in how your staff address these aspects.

Based on the results of this inspection, seven apparent violations were identified and are being considered for escalated enforcement action in accordance with the NRC Enforcement Policy. The current Enforcement Policy is included on the NRC’s Web site at http://www.nrc.gov/about-nrc/regulatory/enforcement/enforce-pol.html. The apparent violations discussed in Sections 2, 3, and 7 of the report involved: 1) a failure to suspend movement and processing of fissile material in an area where the criticality accident alarm system coverage was unavailable; 2) a failure to develop and/or implement alarm response procedures to assure safe operations of the Q-Tank system in response to installed process alarms; 3) a failure to implement the actions required by Site Emergency Plan Procedures in response to the activation of the criticality alarm system; 4) a failure to classify the ammoniated waste water spill as a Local Response Event in accordance with your Site Emergency Plan Procedures and the Classification Logic Flow Chart; 5) a failure to implement the actions required by Site Emergency Plan Procedures in response to a hazardous material release; 6) a failure to identify in the integrated safety analysis that an overflow in the Q-Tank system could lead to an

intermediate consequence event involving excessive concentrations of airborne ammonia; and 7) the failure to designate items relied on for safety for the Q-Tank system to limit the risk of an intermediate consequence event.

The circumstances surrounding these apparent violations, the significance of the issues, and our evaluation of your corrective actions were discussed with members of your staff on June 7 and during a teleconference on July 1, 2010. Since the NRC has not made a final determination in this matter, a Notice of Violation is not being issued for these apparent violations at this time. In addition, please be advised that the number and characterization of the apparent violations described in the enclosed inspection report may change as a result of further NRC review.

The NRC is requesting that you attend a pre-decisional enforcement conference to discuss the apparent violations. Please contact Mr. Marvin Sykes at (404) 997-4629 within ten (10) days of the date of this letter to schedule a date and time for the pre-decisional enforcement conference to be held at the NRC Region II office. This conference will be open to public observation in accordance with Section V of the NRC Enforcement Policy.

The decision to hold a pre-decisional enforcement conference does not mean that the NRC has determined that violations have occurred or that enforcement action will be taken. This conference is being held to obtain information to assist the NRC in making an enforcement decision. The conference will provide an opportunity for you to present your perspectives on these matters and any other information that you believe the NRC should take into consideration in making an enforcement decision. When presenting your perspectives, please be prepared to include information regarding the significance of the apparent violations, information related to the identification of violations, and information related to any corrective actions taken or planned to be taken. In presenting your corrective actions, you should be aware that the promptness and comprehensiveness of your actions will be considered in assessing any civil penalty for the apparent violations. The guidance described in NRC Information Notice 96-28, “Suggested Guidance Relating to Development and Implementation of Corrective Actions,” may be helpful.

You will be advised by separate correspondence of the results of our deliberations on this matter. No response regarding these apparent violations is required at this time. In accordance with 10 CFR 2.390 of the NRC's "Rules of Practice," a copy of this letter and its enclosures will be made available electronically for public inspection in the NRC Public Document Room or from the NRC’s document system (ADAMS), accessible from the NRC Web site at http://www.nrc.gov/reading-rm/adams.html. To the extent possible, your response should not include any personal privacy, proprietary, or safeguards information so that it can be made available to the Public without redaction.

Should you have any questions, please feel free to contact Marvin Sykes at (404) 997-4629.

Sincerely,

/RA/

Anthony T. Gody, Director
Division of Fuel Facility Inspection

Docket No. 70-1151
License No. SNM-1107

Enclosures: 1. Special Inspection Team Charter
2. Special Inspection Team Report

cc w/encls:
Marc Rosser
Manager
Environment, Health and Safety
Commercial Nuclear Fuel Division
Electronic Mail Distribution

Susan E. Jenkins
Assistant Director, Division of Waste Management
Bureau of Land and Waste Management
Department of Health and Environmental Control
Electronic Mail Distribution

Distribution w/encls:
T. Gody, RII
M. Sykes, RII
R. Gibson, RII
C. Evans, RII
P. Habighorst, NMSS
C. Ryder, NMSS
N. Baker, NMSS
OE Mail
PUBLIC

☑ PUBLICLY AVAILABLE ☐ NON-PUBLICLY AVAILABLE ☐ SENSITIVE ☑ NON-SENSITIVE

ADAMS: ☑ Yes ACCESSION NUMBER:_____ ☑ SUNSI REVIEW COMPLETE

OFFICE	RII: DFFI	RII: DFFI	RII: DFFI	RII: DFFI	RII: EICS		
SIGNATURE	CC 7/26/10	AG 7/27/10	RG 7/27/10	MDS 7/28/10	CE 7/28/10		
NAME	CCramer	AGooden	RGibson	MSykes	CEvans		
DATE	8/ /2010	8/ /2010	8/ /2010	8/ /2010	8/ /2010	8/ /2010	8/ /2010
E-MAIL COPY?	YES NO	YES NO	YES NO	YES NO	YES NO	YES NO	YES NO

OFFICIAL RECORD COPY DOCUMENT NAME: G:\FFBII\REPORTS\FINAL REPORTS\WEST\2010\WEST SIT IR 2010001REV1.DOCX

January 29, 2010

MEMORANDUM TO: Alphonsa Gooden, Team Leader
Westinghouse Electric Company Special Inspection

FROM: Luis A. Reyes, Regional Administrator

SUBJECT: SPECIAL INSPECTION TEAM CHARTER FOR WESTINGHOUSE ELECTRIC COMPANY, DOCKET NO. 70-1151 (INSPECTION REPORT NO. 70-1151/2010-001)

This memorandum confirms the establishment of a Special Inspection Team (SIT) at Westinghouse Electric Company (Westinghouse) to inspect and assess the facts and circumstances surrounding the spill of approximately 200 gallons of uranium bearing ammoniated liquid from the Q-Tanks. The issue was reported to the NRC Operations Center on January 25, 2010, (Event # 45655). You are the inspection leader and should report your status directly to me. Chad Cramer is assigned as a member of the team to assist in completing the objectives of the Charter.

The inspection and report will be performed in accordance with the guidance of Inspection Procedure (IP) 88003, and the applicable provisions of IP 93812 and IP 88020, and will be consistent with Management Directive 8.3 and Manual Chapter 2600. The report will be issued within 30 days of the completion of the inspection.

A copy of the Charter is enclosed for your use. The objectives of the inspection are to gather information and make appropriate findings and conclusions in the areas listed in the Charter. These results will be used as a basis for any necessary follow-up. As indicated in the Charter, the foremost objective is to determine the safety implications and adequacy of the licensee's corrective actions for the equipment design and chemical safety issues which resulted in the event.

Enclosure: As stated

CONTACT: Marvin D. Sykes, RII/DFFI
404-997-4629

Eugene Cobey, RII/DFFI
404-997-4701

Special Inspection Team Charter
Westinghouse Ammoniated Wastewater Overflow

Event

On January 24, 2010, a spill of approximately 200 gallons of uranium bearing ammoniated (5-7%) wastewater overflowed from the Q-Tanks into the diked area below the tanks. Operators responded by shutting down the process in accordance with the operational procedure, with the overflow occurring for approximately six minutes. This event was the result of a pump failure in the tank discharge line. Notification was made to the on-duty Health Physics staff and the on-duty Incident Commander. HP staff responded within minutes and used a Draeger tube to determine the ammonia concentrations present. Readings in the immediate area of the dike were as high as 256 ppm ammonia. Readings in the adjacent areas of the facility were approximately 150 ppm ammonia. Non-essential personnel were evacuated and essential personnel were instructed to don personnel protective equipment (PPE) respirators with ammonia cartridges.

Operations cleanup of the area was completed and, with normal plant ventilation running, the ammonia concentrations returned to <25 ppm within approximately two hours. The failed pump was repaired and returned to service. No workers were present near the Q-Tank when the spill occurred therefore no workers required medical attention.

The licensee reported this event on January 25, 2010, at 1833, based on 10 CFR 70 Appendix A (b)(1), "Any event or condition that results in the facility being in a state that was not analyzed, was improperly analyzed, or is different from that analyzed in the Integrated Safety Analysis, and which results in failure to meet the performance requirements of 10 CFR 70.61." In accordance with SNM-1107, License Requirements for the Columbia Plant, intermediate consequences are those where a worker receives greater than or equal to ERPG-2 chemical exposures. The ERPG-2 value for ammonia is 150 ppm. The failure to identify that an intermediate consequence event was credible accident sequence led to this event not being included in the Conversion Integrated Safety Analysis Summary and the failure to designate items relied on for safety (IROFS) for that accident sequence.

Objectives

The objectives of the inspection are to: 1) review the facts surrounding the spill of 200 gallons of uranium bearing ammoniated waste water on January 24, 2010; 2) assess the licensee's response and investigation of the event; and 3) evaluate the licensee's immediate and long term corrective actions to prevent recurrence. To accomplish these objectives, the following tasks will be completed:

1. Develop a timeline of the licensee's actions leading up to and following this process upset condition.

2. Determine the actual and potential safety significance to the workers, public, and the environment.

3. Evaluate the adequacy of the licensee's response to this process upset condition including operator response and emergency plan implementation.

4. Evaluate the adequacy of licensee's event reporting.

5. Evaluate the adequacy of the licensee's causal analysis and extent of condition review.

6. Evaluate the adequacy of the licensee's immediate corrective actions and actions to prevent recurrence.

7. Evaluate the adequacy of the licensee's integrated safety analysis to ensure that performance requirements are met for this and related accident scenarios.

Documentation

Document the inspection findings and conclusions in an inspection report within 30 days of the completion of the inspection.

U.S. NUCLEAR REGULATORY COMMISSION

REGION II

SPECIAL INSPECTION TEAM

Docket No.:	70-1151
License No.:	SNM-1107
Report No.:	70-1151/2010-001
Licensee:	Westinghouse Electric Company
Facility:	Columbia Facility
Location:	Columbia, SC 29250
Dates:	February 1 through July 1, 2010
Inspectors:	A. Gooden, Team Leader C. Cramer, Fuel Facility Inspector
Approved by:	Marvin D. Sykes , Chief Fuel Facility Inspection Branch 3 Division of Fuel Facility Inspection

Enclosure 2

EXECUTIVE SUMMARY

Westinghouse Electric Company
NRC Inspection Report No. 70-1151/2010-001

The purpose of the special inspection team was to review the facts surrounding the spill of approximately 200 gallons of uranium bearing ammoniated waste water on January 24, 2010; assess the licensee response and investigation of the event; and evaluate the licensee's immediate and long term corrective actions to prevent recurrence.

On January 24, 2010, the licensee discovered the overflow of approximately 200 gallons of uranium bearing, ammoniated waste water from the quarantine tank (Q-Tank) system into a diked area of the facility. The licensee subsequently determined that the airborne concentration of ammonia had reached levels of 256 parts per million (ppm). **(Section 1)**

Based on the results from the air sampling surveys and interviews with area workers, the conditions existed for an intermediate consequence event but prompt actions taken by area operators, including donning appropriate personal protective equipment and recovering the ammoniated waste water, resulted in minimal impact to workers inside the chemical conversion area and no release of material to the public or the environment.

An apparent violation was identified for the failure to suspend movement and processing of fissile material within the out of service criticality accident alarm system coverage area within one hour in accordance with Section 6.1.8 of the license application dated June 27, 2007. (AV 70-1151/2010-001-01). **(Section 2)**

The response by the control room operator to process alarms associated with the Q-Tank system was inadequate. An apparent violation was identified by the NRC for the failure to develop or implement alarm response procedures to assure safe operations of the Q-Tank system in response to installed process alarms (AV 70-1151/2010-001-02).

The execution of the Emergency Plan and Site Emergency Procedures in response to the ammoniated waste water spill and the spurious activation of the criticality accident alarm system was inadequate. The NRC identified three apparent violations in this area:

- Failure to activate the blue light visual warning system, instruct security to evacuate all personnel, communicate with the Emergency Director, and identify any systems that may need to be shutdown or isolated, regarding the activation of the criticality accident alarm system in accordance with Section 6.1.3 of SEP-001 Revision 1 "Emergency Response Organization" and Controlled Form Site Emergency Procedure Form (SEPF)-001-5 Revision 0 "Criticality Accident" (Apparent Violation 70-1151/2010-001-03);

- Failure to classify the spill as a Local Response Event in accordance with Section 6.1.1 of SEP-002 Revision 0 "Classification" and Site Emergency Procedure Sketch (SEPS) – 002-1 Revision 0 "Classification Logic Flow Chart" (Apparent Violation 70-1151/2010-001-04); and

- Failure to activate the blue light visual warning system, instruct security to evacuate personnel in the area, and communicate with the Emergency Director, regarding the ammonia airborne concentrations, in accordance with Section 6.1.3 of SEP-001 Revision 1 “Emergency Response Organization” and Controlled Form Site Emergency Procedure Form (SEPF)-001-8 Revision 0 “Hazardous Materials Release” (Apparent Violation 70-1151/2010-001-05). **(Section 3)**

The control room operator created a Redbook entry for the overflow, which is the licensee’s method of alerting the area engineer and licensing. However, both engineering and licensing disregarded this Redbook entry, as spills in this area are frequent and therefore are judged by licensee staff to be of reduced significance. The failure to address the Redbook entry by engineering and licensing in a timely manner was identified by the NRC as a weakness in the internal reporting program. **(Section 4)**

The licensee performed three apparent cause analyses and one root cause analysis. The three apparent cause analyses reviewed the following: 1) the events leading to the overflow of Q-Tank V-116A; 2) the Integrated Safety Analysis for the Q-Tanks; and 3) the response of the licensee’s organization to the spill. The root cause analysis reviewed the spurious activation of the criticality accident alarm system. The NRC determined that the licensee’s root cause analysis surrounding the spurious activation of the criticality accident alarm system was adequate.

The licensee’s apparent cause analyses had multiple weaknesses in the results of two of the apparent cause analyses, surrounding the overflow of the Q-Tank and the Incident Commander’s response to the Q-Tank overflow. The NRC determined that licensee management’s decision to perform apparent cause analyses instead of a more rigorous root cause analysis, led to the licensee failing to identify root causes that were identified by the NRC. (**Section 5)**

The licensee did not implement any immediate corrective actions prior to restarting the process after Q-Tank V-116A overflowed. The NRC concluded that the corrective actions for contributing causes surrounding the overflow of Q-Tank V-116A were inadequate; in that, they did not identify corrective actions to address the causal factors that were identified by the NRC. The NRC concluded that the corrective actions for contributing causes surrounding the Incident Commander’s response, when combined with the corrective actions that were implemented based on the root cause analysis surrounding the criticality accident alarm system, were adequate. The corrective actions related to the activation of the criticality accident alarm system were adequate. The NRC concluded that the corrective actions for contributing causes surrounding the Integrated Safety Analysis were adequate, but have not yet been completed and will be reviewed following completion. **(Section 6)**

The licensee’s Integrated Safety Analysis pertaining to the overflow of uranium bearing ammoniated waste water from the Q-Tank system was inadequate. Two apparent violations were identified:

- Failure to identify that an overflow in the Q-Tank system could lead to an intermediate consequence event involving greater than Emergency Response Planning Guide (ERPG)-2 concentrations of airborne ammonia (Apparent Violation 70-1151/2010-001-06); and

- Failure to designate items relied on for safety for the Q-Tank system to limit the risk of an intermediate consequence event resulting from an overflow of the Q-Tank system (Apparent Violation 70-1151/2010-001-07).

The licensee had not completed a review of other areas of the plant to determine if the potential for similar intermediate or high consequence events existed. This issue is considered an Unresolved Item (URI 70-1151/2010-001-08). **(Section 7)**

The NRC independently identified one direct cause, two root causes, and three contributing causes for the overflow of the ammoniated waste water in the Q-Tank system and the licensee's response. The NRC determined that the direct cause was related to human performance. The root causes were inadequate risk assessment and inadequate problem identification and resolution. The contributing causes were less than adequate procedures, poor response by the Incident Commander, and human factors. **(Section 8)**

Attachments:
Partial List of Persons Contacted
List of Items Open/Closed
List of Inspection Procedures Used
Documents Reviewed
List of Acronyms Used

REPORT DETAILS

Event Description (NRC Event No. 45655)

This event description was independently developed and validated by the NRC using a review of records, logs, and interviews of personnel directly involved with activities prior to and during the quarantine tank (Q-Tank) overflow.

At approximately 2:22 a.m. on January 24, 2010, Q-Tank V-116A overflowed approximately 200 gallons of uranium bearing ammoniated waste water into a diked area below the Q-Tank system. The Q-Tanks are Raschig Ring containing tanks which provide holdup of ammoniated waste water prior to the final filtration before the waste water is transferred to the outside treatment facility. Based on gamma monitoring of the ammoniated waste water that overflowed into the diked area, it was determined that it contained approximately 20 parts per million (ppm) uranium, with two spikes of approximately 50 ppm uranium and between 5-7 percent (%) ammonia. Due to the first spike of uranium, the gamma monitors detected elevated gamma ray levels in the waste water which led to an automatic closure of the valve, isolating the Q-Tank system from the outside treatment facility, putting the Q-Tank system into a recycle mode, as designed. Being in recycle mode puts the largest load on pump P-116A. Figures 1, 2 and 3 show the normal operation and upset conditions associated with the Q-Tank system.

Prior to the spill, at 1:52 a.m. a high level alarm was received on Q-Tank V-116C when level in the tank reached 60 percent (%) full. At this point, operators increased the level setpoint for Q-Tank V-116A to prevent Q-Tank V-116C from overflowing. The setpoint adjustment caused Q-Tank V-116C level to decrease while Q-Tank V-116A level increased. At 2:05 a.m., Q-Tank V-116A alarmed high at 60% full. The control room operator incorrectly assumed that the level alarm was for Q-Tank V-116C which had been hovering at approximately 60% level. The operator did not notice that Q-Tank V-116A level had exceeded 60%. At 2:06 a.m., the transfer pump for Q-Tank V-116A failed, and at 2:22 a.m. Q-Tank V-116A overflowed. An operator noticed the spill at 2:24 a.m. and informed the control room operator. At 2:25 a.m., the control room operator initiated a process shutdown to preclude more waste water from overflowing into the diked area. The overflow was terminated at 2:28 a.m. Shortly thereafter, air samples were taken by plant health physics (HP) technicians to determine the concentration of airborne ammonia. The technicians recorded a maximum airborne concentration of 256 ppm ammonia in the immediate vicinity of the dike that contained the ammoniated waste water and approximately 150 ppm ammonia in adjacent areas. During and subsequent to the overflow, operators in the area donned appropriate personal protective equipment (PPE) and either continued normal operations or began cleaning up the overflow. All conversion lines were restarted by 3:45 a.m. and cleanup of the overflow was completed by 4:00 a.m. No other immediate corrective actions were implemented prior to restart.

The ammoniated waste water overflow was further complicated by a spurious activation of the criticality accident alarm system (CAAS) that began at 11:21p.m. on January 23, 2010, and was not silenced until approximately 6 hours later at 5:37 a.m. on January 24, 2010.

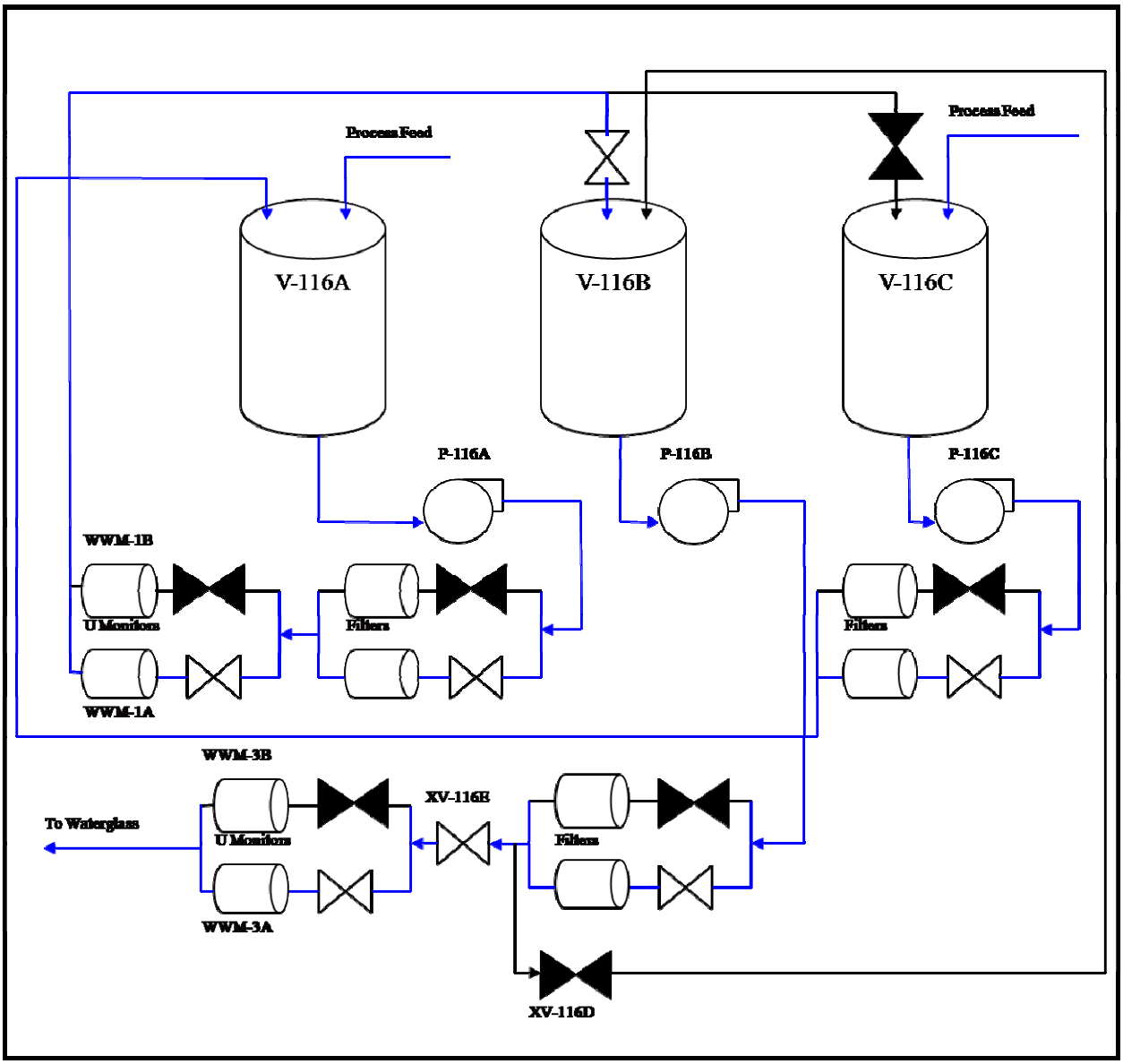

Figure 1: Normal operation of Q-Tanks (blue lines = flow, black lines = no flow)

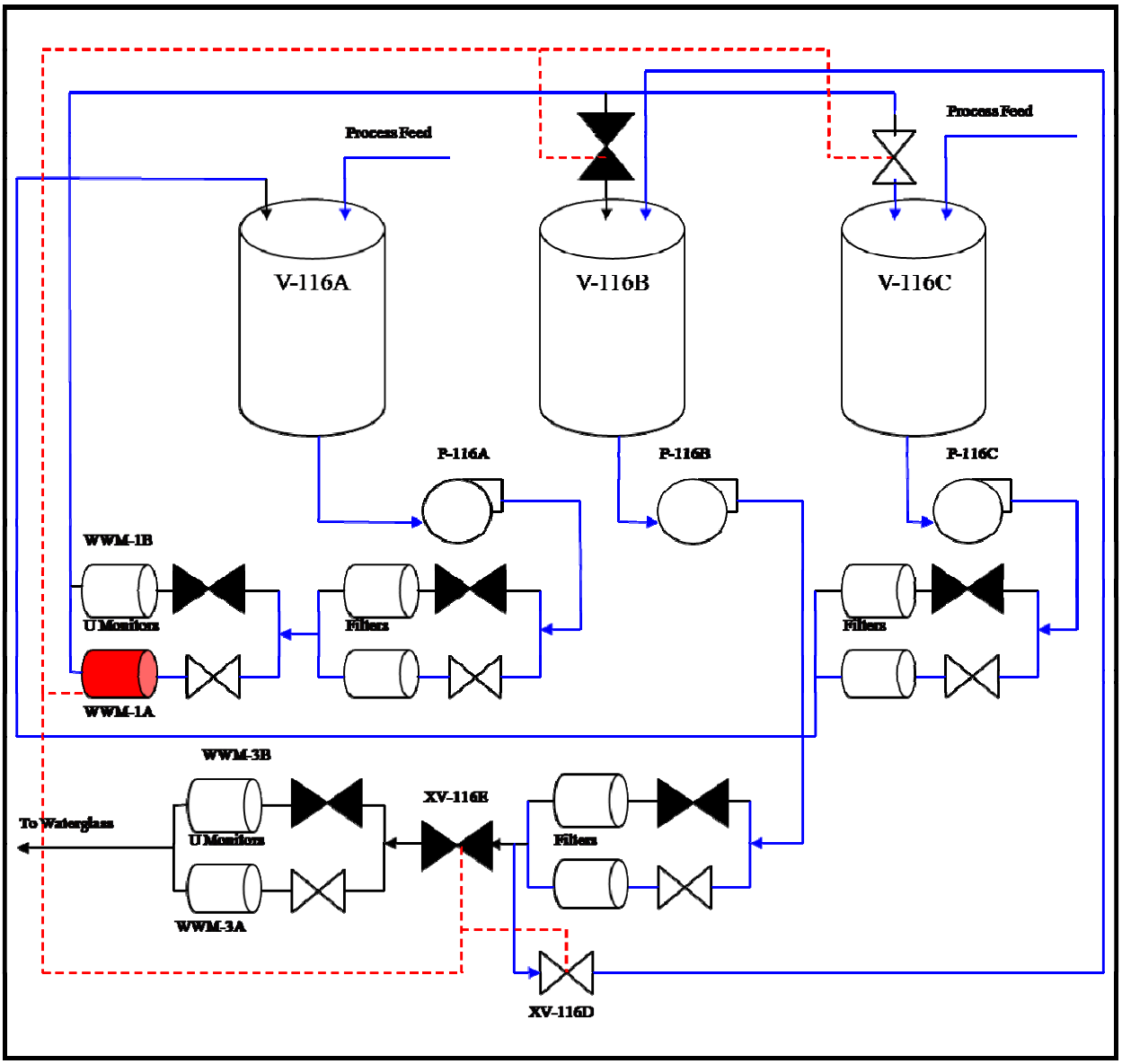

Figure 2: Gamma Monitor WWM-1A alarmed high, valves closed, recycle began

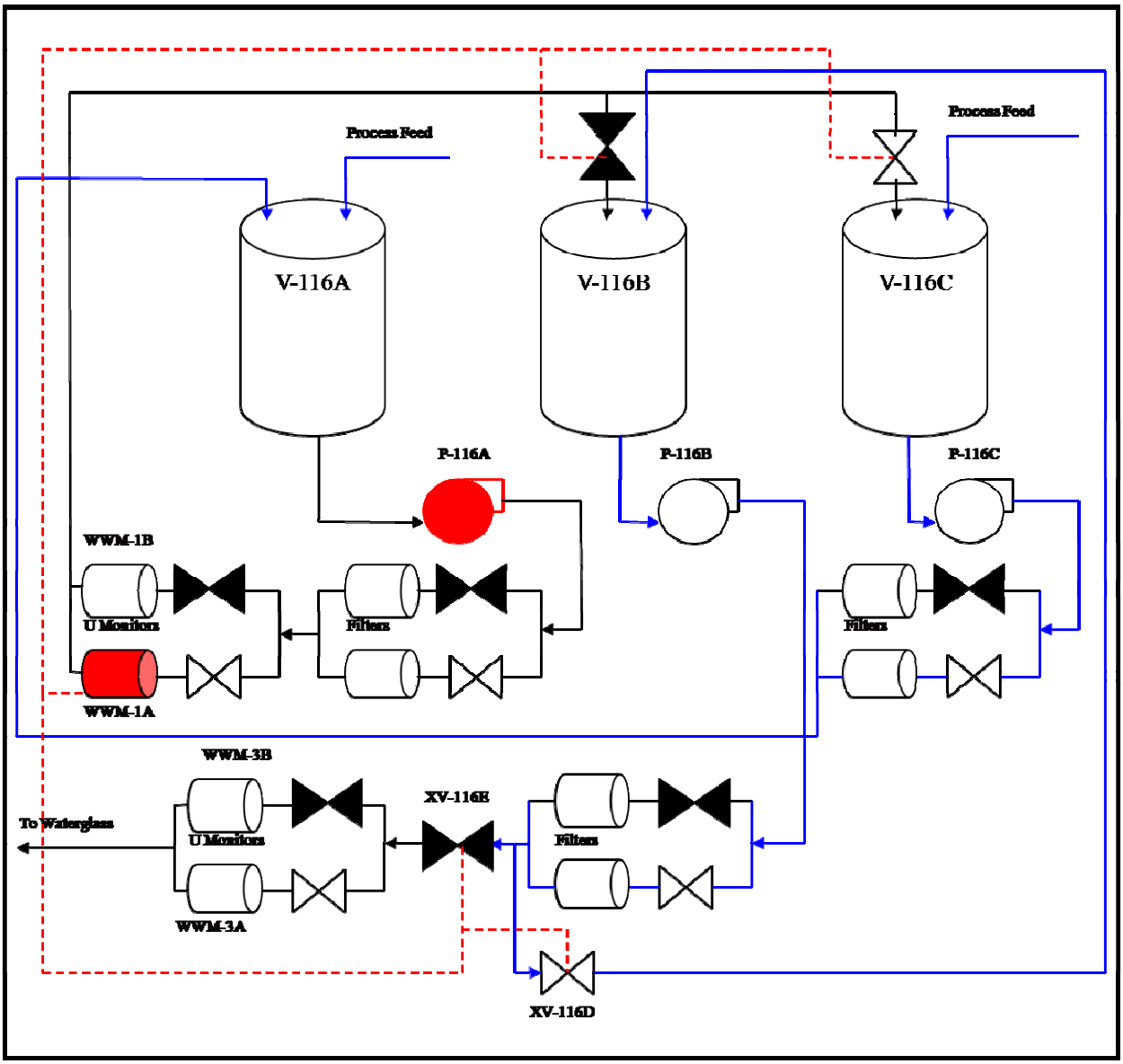

Figure 3: Pump P-116A failed, waste water accumulated in V-116A

Inspection Scope:

The purpose of the special inspection was to inspect and assess the facts and circumstances surrounding the January 24, 2010 event at the Westinghouse facility that resulted in elevated concentrations of airborne ammonia in the chemical conversion area due to a spill in the Q-Tank system. The objectives of the inspection were to: 1) review the facts surrounding the spill of 200 gallons of uranium bearing ammoniated waste water on January 24, 2010; 2) assess the licensee's response and investigation of the event; and 3) evaluate the licensee's immediate and long term corrective actions to prevent recurrence. The inspection included a review of procedures, procedural implementation, and operational decision making to determine if the facility operated safely and in compliance with its license. Areas examined during the inspection are identified in each charter item listed below. Within these areas, the inspection consisted of a selective examination of procedures and records, interviews with personnel, and observation of activities performed by Westinghouse staff following the event.

Charter Items:

1. Develop a timeline of the licensee's actions leading up to and following this process upset condition

Through interviews of licensee personnel and review of licensee records, the team developed a timeline associated with the event surrounding the Q-Tank system. The timeline is shown in Figure 4

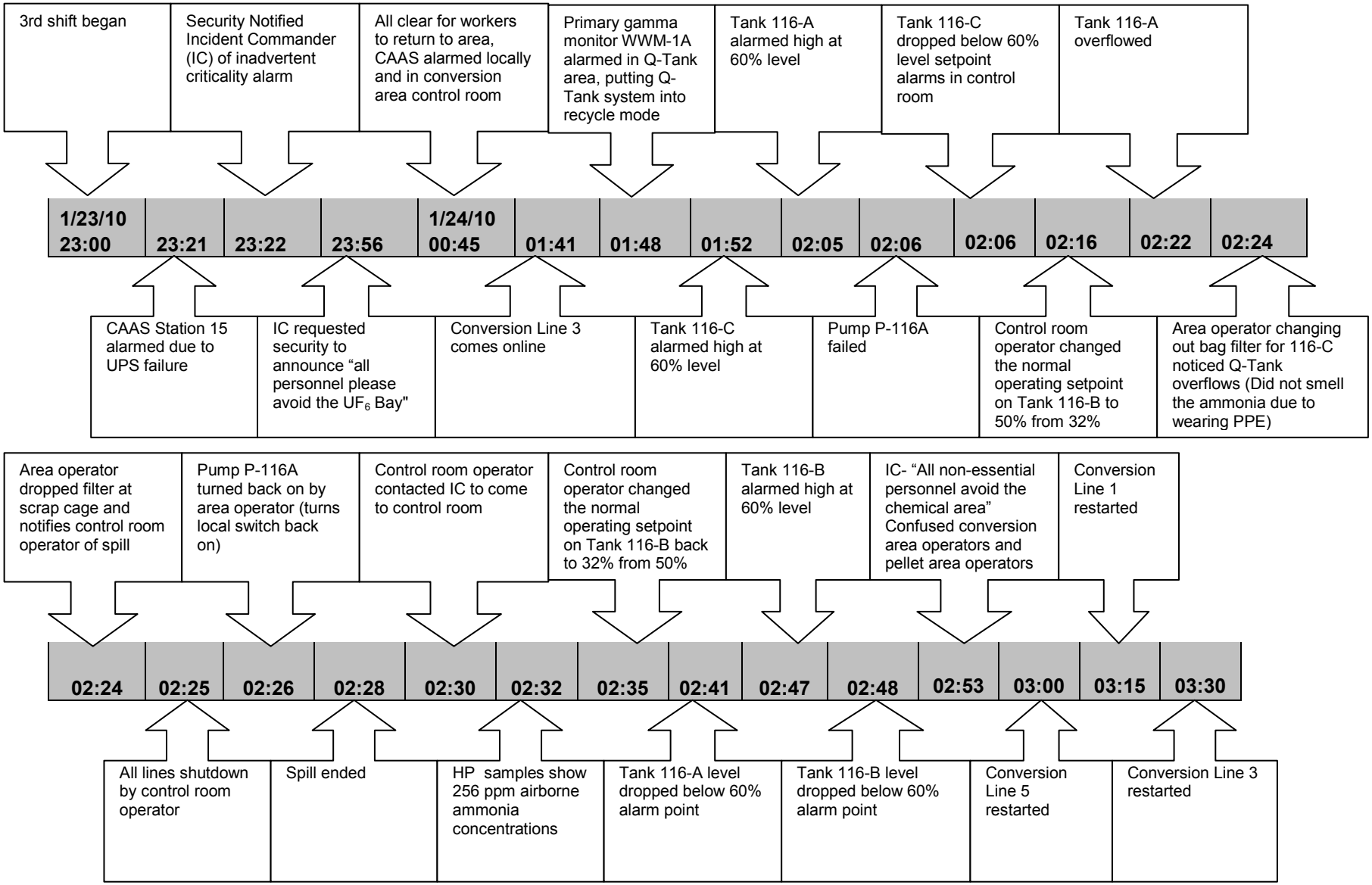
3rd shift began
Security Notified Incident Commander (IC) of inadvertent criticality alarm
All clear for workers to return to area, CAAS alarmed locally and in conversion area control room
Primary gamma monitor WWM-1A alarmed in Q-Tank area, putting Q-Tank system into recycle mode
Tank 116-A alarmed high at 60% level
Tank 116-C dropped below 60% level setpoint alarms in control room
Tank 116-A overflowed
1/23/10 23:00
23:21
23:22
23:56
1/24/10 00:45
01:41
01:48
01:52
02:05
02:06
02:06
02:16
02:22
02:24
CAAS Station 15 alarmed due to UPS failure
IC requested security to announce "all personnel please avoid the UF6 Bay"
Conversion Line 3 comes online
Tank 116-C alarmed high at 60% level
Pump P-116A failed
Control room operator changed the normal operating setpoint on Tank 116-B to 50% from 32%
Area operator changing out bag filter for 116-C noticed Q-Tank overflows (Did not smell the ammonia due to wearing PPE)
Area operator dropped filter at scrap cage and notifies control room operator of spill
Pump P-116A turned back on by area operator (turns local switch back on)
Control room operator contacted IC to come to control room
Control room operator changed the normal operating setpoint on Tank 116-B back to 32% from 50%
Tank 116-B alarmed high at 60% level
IC- "All non-essential personnel avoid the chemical area" Confused conversion area operators and pellet area operators
Conversion Line 1 restarted
02:24
02:25
02:26
02:28
02:30
02:32
02:35
02:41
02:47
02:48
02:53
03:00
03:15
03:30
All lines shutdown by control room operator
Spill ended
HP samples show 256 ppm airborne ammonia concentrations
Tank 116-A level dropped below 60% alarm point
Tank 116-B level dropped below 60% alarm point
Conversion Line 5 restarted
Conversion Line 3 restarted

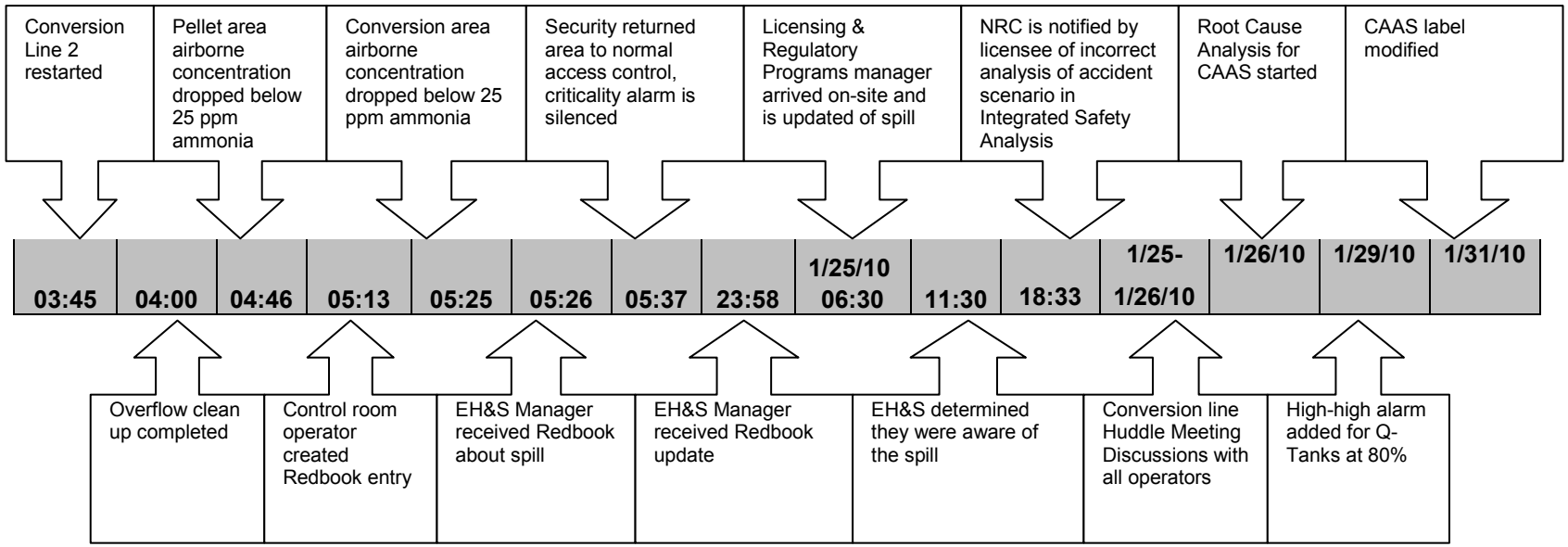

Figure 4: Timeline of events leading up to the overflow of the Q-Tank and subsequent responses

2. Determine the actual and potential safety significance to the workers, public and the environment

Based on the inventory of spilled material inside the diked area and the concentration measured inside the conversion area, the inspectors determined that a sufficient airborne concentration of ammonia was available such that a worker's ability to take protective action could have been impaired. The Westinghouse license application, Section 4.0, Table 4.3 characterizes those accident sequences involving licensed material commingled with ammonia which result in Emergency Response Planning Guideline (ERPG) airborne concentrations greater than or equal to 150 ppm (ERPG-2) as an intermediate consequence accident. Based on interviews with HP technicians and a review of the survey documentation, a maximum concentration of 256 ppm was measured in the immediate vicinity of the spill. Positive readings were measured throughout the chemical conversion area including the pellet (150-200 ppm) and rod handling (100-150 ppm) areas. The maximum measured concentration of 256 ppm exceeded the ERPG-2 level (150 ppm) for ammonia but was less than the ERPG-3 level (750 ppm). According to interviews with several operators in the area almost immediately after the spill, personnel detected the strong odor of the ammonia and donned PPE. No elevated measurements were recorded outside of the chemical conversion area. Thus the risk was limited to the workers in the immediate area and characterized as a potential intermediate consequence event as defined in 10 CFR 70.61(c). There was no significant risk of a release to the public or the environment. To minimize risk, the licensee utilizes a wet ventilation system in which the air stream is scrubbed with water to remove gaseous contaminants and/or particulate matter. This scrubbing system would have prevented any airborne ammonia from being released from the facility. While there was some risk to workers in the immediate area, a study conducted by the Board on Environmental Studies and Toxicology has shown that with airborne concentrations of ammonia at 140 ppm, the irritation caused by the ammonia would be unbearable without appropriate PPE and would force the individual(s) being exposed to the ammonia to evacuate the area. This level is below the ERPG-2 limit of 150 ppm.

The NRC reviewed the actual and potential safety significance related to plant worker response to the spurious activation of the CAAS. The NRC determined that at no time was production halted in areas where the CAAS was unable to perform its intended function. Further, staff at the Uranyl Nitrate (UNH) pad attempted to evacuate the area and headed toward the muster point, when they were informed by the security guards that there was no criticality, and advised them to return to normal operations. The staff at the UNH pad continued normal operations throughout the shift while the CAAS station remained in an alarmed state and no compensatory measures were established to protect workers if an actual nuclear criticality had occurred. Safety Condition S-1 of the license requires that material be used in accordance with statements, representations, and conditions in the license application dated June 27, 2007, or as revised, pursuant to 10 CFR 70.32 or 10 CFR 70.72 and the supplements thereto. Section 6.1.8, "Criticality Accident Alarm System (CAAS)," of the license application states, in part, that if the CAAS is out-of-service, within one hour the [Columbia Fuel Fabrication Facility] will suspend movement and processing of fissile material in the coverage area until the process is brought to a safe shutdown condition. On January 24, 2010, the licensee failed to suspend movement and processing of fissile material in the coverage area of

CAAS 15 within one hour of CAAS 15 being out-of-service. CAAS 15 was out-of-service from 11:21 p.m. on January 23 through 5:37 a.m. on January 24, 2010. Therefore, the failure to suspend movement and processing of fissile material in a coverage area within one hour of the CAAS being out-of-service is considered an apparent violation (AV) of NRC Requirements (AV 70-1151/2010-001-01).

Conclusions

Based on the results of air sampling surveys and interviews with area workers, the inspectors determined that intermediate consequence event conditions existed but prompt actions taken by area operators, including donning appropriate PPE and recovering the ammoniated waste water resulted no injuries or illness to workers inside the chemical conversion area. The potential consequences to the public and the environment remained very low as a result of the wet ventilation system and the limited volume of material that overflowed into the diked area.

An AV has been identified for the licensee's failure to suspend movement and processing of fissile material within one hour of the CAAS being out of service (AV 70-1151/2010-001-01).

3. Evaluate the adequacy of the licensee's response to this process upset condition including operator response and emergency plan implementation

The NRC determined that the control room operator failed to recognize that the high level alarm for Q-Tank V-116A. The control room operator incorrectly assumed that the alarm that sounded was the high level alarm for Q-Tank V-116C. Through reviews of the operating procedures, the NRC determined that the licensee did not have a procedure for abnormal operation of the Q-Tank system. Safety Condition S-1 of the license requires that material be used in accordance with statements, representations, and conditions in the license application dated June 27, 2007, or as revised, pursuant to 10 CFR 70.32 or 10 CFR 70.72 and the supplements thereto. Section 3.4.1, "Procedure Structure," of the license application states, in part, that operations to assure safe, compliant activities involving nuclear material are conducted in accordance with approved procedures. On and before January 24, 2010, the licensee failed to conduct operations in accordance with approved procedures, specifically, failing to have approved procedures for alarm response and off-normal conditions and is considered an AV of NRC requirements (AV 70-1151/2010-001-02).

Prior to the spill of ammoniated waste water, at approximately 11:21 p.m. on January 23, 2010, a criticality trouble alarm was received for monitoring station 15 at the main guard station. The guard indicated that the alarm automatically entered the reset mode before the guard was able to acknowledge the alarm. A security incident report indicated that a worker from the UNH pad reported to the security desk asking why the criticality horns were sounding at the UNH pad. At approximately 11:22 p.m., security notified the incident commander (IC) and health physics technicians regarding the criticality alarm.

The IC requested additional information, including the current operability status of station 15. At 11:56 p.m. (approximately 30 minutes after the initial alarm sounded), the IC requested that security announce "All personnel please avoid the UF_6 bay." However, personnel working inside the chemical conversion area were unaware of the criticality alarm activation and therefore did not evacuate.

Site Emergency Procedure (SEP)- 001, Revision 1 "Emergency Response Organization", Section 6.1.3 required, in part, "The Incident Commander shall immediately conduct a size up of the incident scene and initiate correct controlled form(s) as listed in Section 7.2 ." Site Emergency Procedure Form (SEPF)-001-5, Revision 0 "Criticality Accident" Section 2.0 regarding the Incident Commander actions in response to a criticality accident states, in part, "activate blue light visual warning system, instruct security to announce, the criticality alarm has been activated. All personnel evacuate immediately." Based on interviews with security personnel, operators, and other workers inside the chemical conversion area, no evacuation was ordered nor was the criticality alarm or blue light visual warning system activated inside the chemical conversion area. The NRC was informed by security personnel on shift at the time of the incident that the IC requested that security announce "all personnel please avoid the UF_6 bay." The IC did not request security to order an evacuation while health physics technicians performed surveys to confirm the status of radiation levels. Therefore, workers inside the chemical conversion area remained in the vicinity of a potential criticality event. Around 12:45 a.m. on January 24, 2010, health physics surveys confirmed that there was no criticality or elevated radiation levels and cleared the UNH pad for workers to return. The NRC determined that the licensee's performance in response to the criticality alarm was not in accordance with plant procedures. Had a criticality actually occurred, workers could have incurred significant exposure due to the failure of the IC to order an evacuation. Therefore, the failure to implement actions in accordance with Section 6.1.3 of SEP-001 and Controlled Form SEPF-001-05 following the activation of a criticality monitor is considered an AV (AV 70-1151/2010-01-03).

The NRC also determined that the spill was not classified as a local response event in accordance with SEP-002, Revision 0 "Classification" and Site Emergency Procedure Sketch (SEPS)-002-01, Revision 0 "Classification Logic Flow Chart". Section 6.5 of SEP-002 states, in part, that "The Incident Commander working with the Emergency Director shall decide on the classification of the event based on guidelines in Section 6.1, 6.2 and 6.3." Section 6.1.1 of SEP-002 defines a Local Response Event as "Any emergency event causing deviation from normal operations which can be managed within the confines of the plant site and control of the situation can be achieved in less than 15 minutes (less than 24 hours for powder/liquid spill)." Included as an example is a "controlled release of toxic gas or hazardous material where the source of the release can be isolated and there is no threat of escalation." In addition to the Local Response Event criteria in Section 6.1 of SEP-002, the Classification Logic Flow Chart, Sketch SEPS-002-1, includes classification as a Local Response Event, "Controlled Hazardous Material Release – Isolated Within 15 Minutes (approx). Source Confined No Threat Of Further Escalation." Contrary to procedural requirements, on January 24, 2010, following a spill of approximately 200 gallons of ammoniated waste water with maximum airborne concentration measured at 256 ppm ammonia, the IC failed to classify the spill

as a Local Response Event. Therefore, the failure to classify the spill as a Local Response Event in accordance with Section 6.1.1 of SEP-002 and the Classification Logic Flow Chart (SEPS-002-01) is considered an AV (AV 70-1151/2010-01-04).

In addition to the failure to classify the spill as a Local Response Event, actions were not implemented in accordance with Emergency Procedure SEP-001 and Controlled Form SEPF-001-08, Revision 0 "Hazardous Materials Release". Section 6.1.3 of SEP-001 states, in part, that "The Incident Commander shall immediately conduct a size up of the incident scene and initiate correct controlled form(s) as listed in Section 7.2 ." Controlled Form SEPF-001-8, Hazardous Materials Release, Section 2.0 states, in part, that the IC "Activate blue light visual warning system, instruct security to announce all personnel in the area evacuate, and communicate with the Emergency Director." The IC failed to activate the blue light visual warning system from the Conversion Control Room, no request was made to security to activate the warning system, and the Emergency Director was not notified. Further, with the exception of required staff donning PPE for manning of essential equipment, all other personnel inside the chemical conversion area should have been ordered to evacuate. Security indicated that an announcement was made via the Voice Communication System (VCS) that "all non-essential personnel avoid the chemical area." Based on interviews with selected conversion area workers on shift during the event, the announcement resulted in confusion due to the unfamiliarity with the term "non-essential personnel." Contrary to procedural requirements, on January 24, 2010, the Incident Commander failed to activate the blue light visual warning system; no evacuation was ordered; workers were told to don respiratory protection; and the Emergency Director was not contacted during the event and made aware of the spill and/or the ammonia airborne concentrations that were measured inside the conversion area. The failure to implement the actions as required by Emergency Procedure SEP-001 and Controlled Form SEPF-001-8 is considered an AV (AV 70-1151/2010-01-05).

Conclusions

Four AVs were identified for: 1) the failure to develop or implement alarm response procedures to assure safe operations of the Q-Tank system in response to installed process alarms; 2) the failure to implement actions in accordance with Section 6.1.3 of SEP-001 and Controlled Form SEPF-001-5 following the activation of a criticality monitor; 3) the failure to classify the ammoniated waste water spill as a Local Response Event in accordance with Section 6.1.1 of SEP-002 and the Classification Logic Flow Chart (SEPS-002-01); and 4) the failure to implement actions in accordance with SEP-001 and Controlled Form SEPF-001-8 in response to elevated concentrations of airborne ammonia.

4. Evaluate the adequacy of licensee's event reporting

The control room operators created a Redbook entry for the spill. This is the licensee's method of alerting the area engineer and the licensing group to any deficiency or abnormal condition. However, both engineering and licensing overlooked this Redbook entry citing that spills in this area are frequent and therefore are typically judged to be of reduced significance. The failure to address the Redbook entry by engineering and licensing has been identified as a weakness in the program. The licensee has been

working to instill in operators a pattern of creating a Redbook entry due to deficiencies or abnormal conditions. However, management failed to address the Redbook entry in a timely manner, therefore the process failed to serve its purpose.

The licensee made a timely report to the NRC Operations Center at 6:33 p.m. on January 25, 2010. The licensee reported to the NRC Operations Center, within 24 hours of discovery, in accordance with Appendix A to 10 CFR 70, Section (b)(1), any event or condition that results in the facility being in a state that was not analyzed, was improperly analyzed, or is different from that analyzed in the Integrated Safety Analysis, and which results in failure to meet the performance requirements of §70.61. The NRC has determined that the licensee's report was timely since the licensee was reporting that their facility was not properly analyzed in the ISA, not that the overflow of Q-Tank V-116A had occurred. Once the spill occurred, the licensee reviewed the results of the spill and compared the results to the ISA. At approximately 11:30 a.m. on January 25, 2010, the licensee had a meeting where they became aware that the ISA did not appropriately classify this event as an intermediate consequence event, and therefore, reported the event to the NRC Operations Center.

Conclusions

The control room operator created a Redbook entry for the overflow, which is the licensee's method of alerting the area engineer and the licensing group. However, both engineering and licensing overlooked this Redbook entry, as spills in this area are frequent. The failure to address the Redbook entry by engineering and licensing in a timely manner has been determined to be a weakness in the internal reporting program by the NRC.

The licensee made a timely report to the NRC Operations Center at 6:33 p.m. on January 25, 2010, in accordance with Appendix A to 10 CFR 70, Section (b)(1), any event or condition that results in the facility being in a state that was not analyzed, was improperly analyzed, or is different from that analyzed in the Integrated Safety Analysis, and which results in a failure to meet the performance requirements of §70.61.

5. Evaluate the adequacy of the licensee's causal analysis and extent of condition review

On April 1, 2010, the licensee completed their root cause analysis (RCA) of the UNH pad criticality accident alarm system activation due to uninterruptible power supply (UPS) failure and transmitted the RCA to the NRC for review and evaluation. Along with this transmittal, the licensee also provided three apparent cause analyses (ACAs) for NRC review. The first ACA team investigated the events leading to the overflow of Q-Tank V-116A. The second ACA team investigated the licensee's ISA. The third ACA team investigated the response of the licensee's organization to the spill. The NRC reviewed the licensee's RCA and ACA for adequacy of scope, depth, and identification of causal factors.

The RCA performed on the criticality accident alarm system activation identified the following causal factors: 1) root cause – inadequate system design and response training for [Columbia Fuel Fabrication Facility] outside criticality alarm; and

2) contributing cause – lack of performance management process for IC and Emergency Director Positions. The NRC reviewed these causal factors and is in agreement with the licensee's assessment.

The first ACA (ACA 10-032-C001) investigated the overflow of Q-Tank V-116A. The ACA identified the following apparent causes: 1) mental shortcut – operator thought he was acknowledging an alarm for Q-Tank C because that was the alarm that he expected to see; and 2) unclear – though this motor operates at maximum load when recycling water, as was the condition during this event, the reason why it tripped during this event and has not tripped in the past is unknown. The NRC reviewed this ACA and has identified multiple deficiencies. The NRC concluded that the licensee failed to identify a root cause of this incident which was inadequate problem identification and resolution **(See Section 8)**. Overflows and spills have become routine at the licensee's facility, and the practice was to respond with mitigation such as donning PPE and prompt cleanup rather than determining the root cause of the spill or overflow. The pump that failed on January 24, 2010, has failed multiple times prior to this event, and rather than track or trend these failures, operators routinely toggled a power switch to return the pump to operation without informing supervisors or engineers who may use this information to trend performance. The NRC also determined that there were two other contributing causes that the licensee failed to identify during the performance of this ACA. **(See Section 8)**

The second ACA (ACA 10-026-C001) investigated the licensee's Process Hazards Analysis (PHA) which is incorporated into the ISA in order to determine all credible intermediate and high consequence events. Based on this ACA, the licensee has identified one apparent cause: ISA process permitted use of organizational beliefs or assumptions without validation. The NRC agrees with this apparent cause and it is in agreement with one of the NRC's root causes: inadequate risk assessment system.

The third ACA (ACA 10-035-C008) investigated the IC's response to the overflow of Q-Tank V-116A that exposed the chemical area to ammonia vapors. The licensee identified two apparent causes through this investigation: 1) The IC based his decision not to activate the blue light system on previous experience. He had witnessed numerous ammonia spills in the past for which the blue light was not activated; and 2) the organization did not have a clear definition of who was "non-essential" personnel. The NRC has reviewed the licensee's apparent causes and has identified deficiencies with this ACA. The NRC determined that there was one direct cause that the licensee failed to identify **(See Section 8)**.

<u>Conclusions</u>

The licensee's RCA and identification of causal factors related to the activation of the CAAS was adequate. The licensee's ACA and identification of causal factors surrounding the overflow of Q-Tank V-116A resulting in airborne ammonia concentrations in excess of the ERPG-2 limit were inadequate in that they did not identify all possible causal factors [that were identified by the NRC]. The licensee's ACA and identification of causal factors surrounding the Integrated Safety Analysis was adequate, but corrective actions for contributing causes were not completed and will be

reviewed following completion. The licensee's ACA and identification of causal factors surrounding the IC's response was inadequate, in that it did not identify all of the causal factors [that were identified by the NRC].

6. Evaluate the adequacy of the licensee's immediate corrective actions and actions to prevent recurrence

The licensee failed to implement any immediate corrective actions following the overflow of Q-Tank V-116A in order to prevent recurrence. The licensee donned appropriate PPE and promptly recovered the ammoniated waste water from the diked area, however prior to restarting the processes, the licensee did not implement any corrective or compensatory measures to prevent the recurrence of an overflow. Further, the licensee restarted the processes prior to finishing recovery of the ammoniated waste water from the diked area. The NRC concluded that there was a significant weakness by the licensee to implement immediate corrective actions following the overflow of Q-Tank V-116A.

Based on the RCA for the spurious activation of the CAAS, the licensee has identified multiple corrective actions, including: 1) re-training all ICs on facility evacuation criteria; 2) development and implementation of a program for the selection, qualification, and performance management process for ICs and Emergency Directors; and 3) the development and implementation of a plan to connect the outside CAAS alarms with the main building CAAS alarm circuit. Based on a review of the RCA, the NRC determined that the corrective actions were adequate.

Based on ACA 10-032-C001, the licensee identified multiple corrective actions including: 1) provide pump indication in the control room including an alarm in the event that a pump shuts off unexpectedly; 2) provide a high-high level interlock on all Q-Tanks that will shut off or divert inlet flows going to the Q-Tank system; and 3) the addition of a high-high level alarm in the control room to notify the operator when the Q-Tanks are nearly full. The licensee's corrective actions address many of the issues that the NRC has identified; however, these corrective actions may not correct issues that may arise plant-wide. Since the licensee's corrective actions fail to address less than adequate problem identification and resolution plant-wide, the NRC concluded that the corrective actions implemented by the licensee may be less than adequate.

The licensee has implemented corrective actions related to the finding of ACA 10-026-C001 including: 1) complete an Extent of Condition review for similar conditions in remaining ISAs; 2) update ISAs based on the results of the Extent of Condition; and 3) designate applicable IROFS as needed and include in the ISA Summary. The NRC has reviewed these corrective actions and concluded that the corrective actions proposed by the licensee are adequate. However, the licensee had not completed the extent of condition review or, if warranted, the designation of applicable IROFS, and therefore the NRC will be tracking this issue as discussed in Section 7 of this report.

The licensee identified multiple corrective actions as a result of ACA 10-035-C008 including: 1) review the training process of incident commanders with emphasis on procedure use; 2) consideration of creating a procedure for non-evacuation size spills; and 3) improvements to Controlled Form SEPF-001-8 to provide guidance on hazardous

material spills requiring emergency response. The NRC determined that the corrective actions that have been implemented based on this ACA in addition to the corrective actions implemented from the RCA performed for the CAAS alarms related to the IC and Emergency Director are adequate.

Conclusions

The licensee did not implement any immediate corrective actions prior to restarting the process after Q-Tank V-116A overflowed. The corrective actions related to the activation of the criticality accident alarm system were adequate. The corrective actions of contributing causes surrounding the overflow of Q-Tank V-116A was inadequate in that it did not identify corrective actions rigorous enough to address the causal factors that were identified by the NRC. The corrective actions of contributing causes surrounding the ISA were adequate, but were incomplete at the time of the inspection and will be reviewed at a later date. The corrective actions of contributing causes surrounding the IC's response were adequate.

7. Evaluate the adequacy of the licensee's integrated safety analysis to ensure that performance requirements are met for this and related accident scenarios

For the uranium bearing ammoniated water spill from the Q-Tank system, the licensee did evaluate this accident scenario in the ISA. However, the licensee determined that this was a low consequence event, and therefore did not require items relied on for safety (IROFS). 10 CFR 70.62(c)(1) states, in part, that each licensee shall conduct and maintain an integrated safety analysis that is of appropriate complexity of the process that identifies: (ii) chemical hazards of licensed material and hazardous chemicals produced from licensed material; (iv) potential accident sequences caused by process deviations or other events internal to the facility and credible external events, including natural phenomenon; and (v) the consequence and the likelihood of occurrence of each potential accident sequence identified pursuant to paragraph (c)(1)(iv) of this section and the methods used to determine the consequences and likelihoods. Contrary to the requirements, on and before January 24, 2010, the licensee failed to conduct and maintain an integrated safety analysis that identified potential consequences and likelihood of occurrence of an accident sequence. Specifically, the licensee failed to identify that an overflow in the Q-Tank area could lead to an intermediate consequence event involving excessive concentrations of airborne ammonia. The licensee's failure to identify that an overflow in the Q-Tank system could lead to an intermediate consequence event involving greater than Emergency Response Planning Guide (ERPG)-2 concentrations of airborne ammonia is considered an AV (AV 70-1151/2010-001-06).

During the spill that occurred on January 24, 2010, the licensee measured ammonia concentrations of 256 ppm in the immediate area of the spill. Table 4.3, Risk Evaluation Table, of the license application defines an intermediate consequence event as greater than or equal to ERPG-2 chemical exposure to a worker. The American Industrial Hygiene Association defines the ERPG-2 airborne ammonia concentration as 150 ppm. 10 CFR 70.61(c) states, in part, that the risk of each credible intermediate consequence event must be limited. Engineered controls, administrative controls, or both shall be applied to the extent needed so that, upon implementation of such controls, the event is

unlikely or its consequences are less than those in paragraphs (c)(1)-(4) of this section. 10 CFR 70.61(e) states, in part, that each engineered or administrative control or control system necessary to comply with paragraph (c) of this section shall be designated as an item relied on for safety. Contrary to requirements, on and before January 24, 2010, the licensee failed to designate engineered or administrative controls or control systems as items relied on for safety, when necessary to meet the performance requirements of 10 CFR 70.61(c). Specifically, the licensee failed to designate items relied on for safety for the Q-Tank to limit the risk of an intermediate consequence event resulting from an overflow of the Q-Tank system. The failure to designate items relied on for safety to limit the risk of an intermediate consequence event resulting from an overflow of the Q-Tank system is considered an AV (AV 70-1151/2010-001-07).

The NRC determined that the licensee had not adequately addressed the consequences of a hydrogen fluoride spill in the bulk blending room. Also, other areas of the plant were being reviewed to determine if there is a potential chemical hazard that had not been previously identified. The licensee committed to following up on this issue as part of their corrective actions relating to this spill. The licensee was informed that the review of other areas of the plant to determine if there was a potential for an intermediate or high consequence event involving chemical hazards that was not properly analyzed in the ISA was considered an URI (URI 70-1151/2010-001-08).

Conclusions

The licensee's ISA pertaining to the overflow of uranium bearing ammoniated waste water from the Q-Tank system was inadequate. Two AVs were identified:

- Failure to identify that an overflow in the Q-Tank system could lead to an intermediate consequence event involving Emergency Response Planning Guide (ERPG)-2 concentrations of airborne ammonia is considered an AV (AV 70-1151/2010-001-06); and

- Failure to designate items relied on for safety to limit the risk of an intermediate consequence event resulting from an overflow of the Q-Tank system is considered an AV (AV 70-1151/2010-001-07).

The NRC determined that the licensee had not performed an adequate analysis of other areas of the facility relating to chemical safety. The licensee committed to following up on this item as part of their corrective actions relating to this spill and the NRC will be tracking this issue as an URI (URI 70-1151/2010-001-08).

8. Independent Root Cause Analysis

The NRC completed a Management Oversight and Risk Tree analysis to determine the direct, root, and contributing causes of the Q-Tank V-116A overflow. The NRC concluded that there were multiple causes leading to this event.

The NRC determined that the direct cause was less than adequate human performance, for both the control room operator and the IC. The operator failed to shutdown the process or restore pump P-116A prior to the spill occurring. Had the operator shut the process down at the appropriate time in response to the Q-Tank V-116A high level alarm, this event could have been prevented.

The IC failed to perform three tasks prescribed by the Emergency Plan Implementing Procedures: 1) the IC should have evacuated the building prior to the ammoniated waste water spill as a result of the activation of the criticality alarm that was sounding in the conversion control room; 2) the IC should have contacted the Emergency Director when it was determined that the airborne concentrations of ammonia were greater than the ERPG-2 levels; and 3) the IC should have evacuated the immediate area as suggested by the HP technicians once the airborne concentration was found to be greater than ERPG-2 levels of ammonia.

The NRC concluded that there were two root causes associated with this event. The first root cause was problem identification and resolution was less than adequate. Spills have become routine at the Westinghouse Electric Company, and instead of determining the cause of the spills to ensure they do not occur again, the licensee's response has been to put in place mitigating actions such as prompt cleanup and PPE rather than resolve the root cause of the issue. Further, the licensee failed to track and/or trend pump failures related to the Q-Tank system, which may have given an indication that the pump was overloaded and therefore should have been replaced. The second root cause was risk assessment system was less than adequate. The licensee failed to determine that an intermediate consequence event was possible in the Q-Tank system. Instead of performing a thorough evaluation of the worst case spills and evaluating the potential airborne concentrations from these spills, the licensee relied on the staff's operational experience. Had the risk assessment been adequate, a more thorough evaluation of the design of the Q-Tank system would have been performed and IROFS would have been implemented to prevent and/or mitigate this accident scenario.

The NRC concluded that there were three contributing causes related to this spill. The first contributing cause was procedures were less than adequate. The licensee did not have adequate emergency response (criteria for classifying hazardous material event such as concentration, quantity) or alarm response procedures in place for the operators to properly identify/control the situation which led to an overflow of Q-Tank V-116A and subsequently to a greater than ERPG-2 concentration of airborne ammonia. The second contributing cause was the less than adequate response by the IC as the interim emergency director. However, training for that position only required a forty hour training course and emergency drill training. While reviewing the emergency drill training, it was determined that the IC had performed in emergency drills twice in the past two years, while others received as many as nine drills in the same time period. The third contributing cause was human factors were less than adequate. There were multiple human factors that were less than adequate associated with this event.

a. Display difficult to read. The Q-Tank volume display in the control room is difficult to read and would make it difficult for the operator to appropriately track the volume of ammoniated waste water in the Q-Tanks.

b. No alarm for pump failure. There is no alarm in the control room that indicated a failure for this pump, while most other pumps in the plant are wired to the control room to alert the operators of a pump failure.

c. Criticality alarm sounding. An unknown alarm was sounding in the control room throughout the night, which subsequently was determined to be the criticality alarm. The operators were unable to silence the alarm, which was most certainly a distraction to the control room operator.

d. No automatic shut-off. The Q-Tank system does not have an automatic shut-off system to prevent an overflow of the Q-Tanks from occurring.

Conclusions

The NRC independently identified one direct cause, two root causes, and three contributing causes for the overflow of the ammoniated waste water in the Q-Tank system and the associated responses to the overflow and responses to alarms. The NRC determined that the direct cause was related to human performance. The root causes were less than adequate: 1) risk assessment, and 2) problem identification and resolution. The contributing causes were less than adequate: 1) procedures, 2) amelioration, and 3) human factors.

Exit Interviews

The inspection scope and results were summarized with licensee management in a meeting on June 7, 2010 and on July 1, 2010. Although proprietary information and processes were reviewed during this inspection, proprietary information was not included in this report.

ATTACHMENT

1. PARTIAL LIST OF PERSONS CONTACTED

Licensee

C. Alstadt, Plant Manager
S. Carver, Emergency Response Manager
G. Couture, EHS L&RP Manager
B. Phillips, Conversion Area Manager
D. Precht, Operations Manager
M. Rosser, EHS Manager

Other licensee employees contacted included engineers, operators, supervisors, technicians, and maintenance craft personnel.

Nuclear Regulatory Commission

D. Rich, Chief, Fuel Facility Inspection, Branch 1

2. LIST OF ITEMS OPENED, CLOSED, AND DISCUSSED

Item Number	Status	Description
EN 45655	Closed	Unanalyzed Condition – Overflow of Uranium Bearing Ammoniated Wastewater
AV 70-1151/2010-001-01	Opened	Failure to suspend movement of special nuclear material within one hour of CAAS being inoperable (Section 2)
AV 70-1151/2010-001-02	Opened	Failure to develop and/or implement alarm response procedures for Q-Tank system (Section 3)
AV 70-1151/2010-001-03	Opened	Incident Commander failed to classify a spill as a Local Response Event in accordance with Emergency Plan (Section 3)
AV 70-1151/2010-001-04	Opened	Incident Commander failed to implement Site Emergency Plan Procedure when aware of airborne ammonia concentrations (Section 3)
AV 70-1151/2010-001-05	Opened	Incident Commander failed to implement Site Emergency Plan Procedure when aware of alarming CAAS (Section 3)

AV 70-1151/2010-001-06	Opened	Failure to identify in the ISA that a spill in the Q-Tank system could lead to intermediate consequence event (Section 7)
AV 70-1151/2010-001-07	Opened	Failure to designate IROFS to limit the risk of an intermediate consequence event (Section 7)
URI 70-1151/2010-001-08	Opened	Follow-up on results of reanalysis of chemical safety accident scenarios in the ISA (Section 7)

3. INSPECTION PROCEDURES (IPs) USED

IP 88003 Reactive Inspection for Events at Fuel Cycle Facilities
IP 93812 Special Inspection
IP 88020 Operational Safety

4. DOCUMENTS REVIEWED

CNFD Columbia Plant Final Report, "Conversion Area Q-Tanks System Process Hazard Analysis (PHA)", December 11, 2007.

Chemical Operating Procedure No. COP-811601 "On Line Gamma Activity Monitors and Quarantine Tanks System Operation", Revision 26, September 29, 2009.

Westinghouse Conversion Line 1, Vibration and Infrared Analysis Data, February 4, 2010.

Westinghouse Site Emergency Plan, Revision No. 14, September 30, 2008.

Columbia Fuel Fabrication Facility Site Emergency Procedures, Procedure No. SEP-001 "Emergency Response Organization", Revision 1, January 4, 2007.

Columbia Fuel Fabrication Facility Site Emergency Procedures, Procedure No. SEP-002 "Classification", Revision 0, August 5, 2004.

Classification Logic Flow Chart, Sketch No. SEPS-002-1, "Hazardous Material Release/Spill, Power Loss, Bomb Threat," Revision 0, September 9, 2004.

Westinghouse Nuclear Fuel, Form No. SEPF-001-8, "Hazardous Materials Release, Revision 1, October 15, 2009.

Westinghouse Nuclear Fuel, Form No. SEPF-001-5, "Criticality Accident, Revision 0, September 9, 2004.

5. LIST OF ACRONYMS USED

ACA	Apparent Cause Analysis
AV	Apparent Violation
CAAS	Criticality Accident Alarm System
CFR	Code of Federal Regulations
ERPG	Emergency Response Planning Guideline
HP	Health Physics
IC	Incident Commander
IROFS	Items Relied On For Safety
ISA	Integrated Safety Analysis
NRC	Nuclear Regulatory Commission
PHA	Process Hazard Analysis
PPE	Personal Protective Equipment
PPM	Parts Per Million
Q-Tank	Quarantine Tank
RCA	Root Cause Analysis
SEP	Site Emergency Procedure
SEPF	Site Emergency Procedure Form
SIT	Special Inspection Team
UF_6	Uranium Hexafluoride
UNH	Uranyl Nitrate
UPS	Uninterruptible Power Supply
VCS	Voice Communication System
URI	Unresolved Item