Table 6.2-9 Secondary Containment Penetration List* (Continued)

Penetration Number	Name	Elevation (mm)	Diameter (mm
60	Not Used	-	-
61	Not Used	-	-
62	AFI	-1700	150
63	AFI (Drain Line)	-8200	20

* This table is provided in response to Question 430.34.
† These HVAC openings have safety-related isolation valves with both local monitoring and remote (in control room) monitoring.
‡ These doors are monitored in the control room as per Subsection 13.6.3.4.

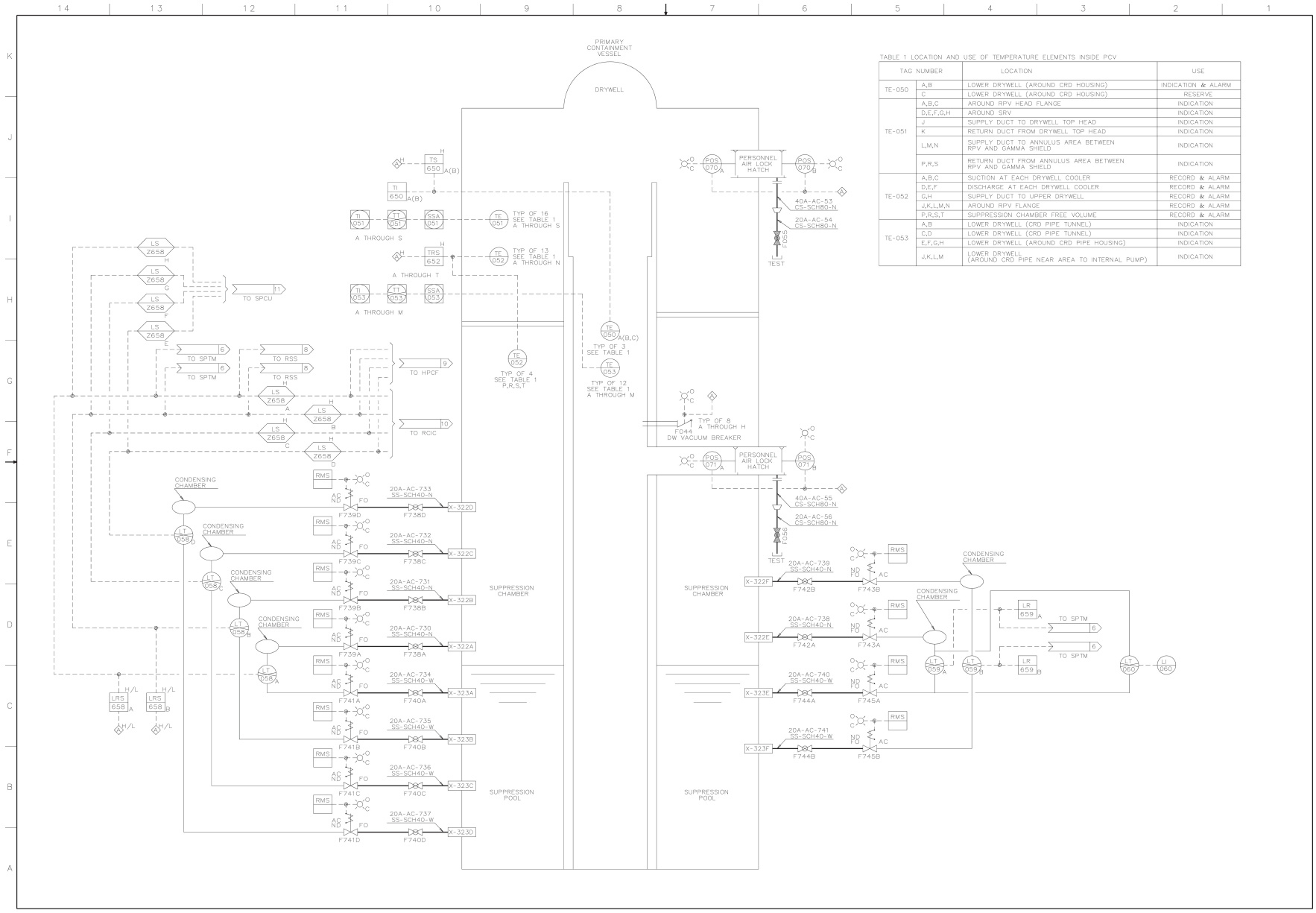

TABLE 1 LOCATION AND USE OF TEMPERATURE ELEMENTS INSIDE PCV

TAG NUMBER		LOCATION	USE
TE-050	A,B	LOWER DRYWELL (AROUND CRD HOUSING)	INDICATION & ALARM
	C	LOWER DRYWELL (AROUND CRD HOUSING)	RESERVE
TE-051	A,B,C	AROUND RPV HEAD FLANGE	INDICATION
	D,E,F,G,H	AROUND SRV	INDICATION
	J	SUPPLY DUCT TO DRYWELL TOP HEAD	INDICATION
	K	RETURN DUCT FROM DRYWELL TOP HEAD	INDICATION
	L,M,N	SUPPLY DUCT TO ANNULUS AREA BETWEEN RPV AND GAMMA SHIELD	INDICATION
	P,R,S	RETURN DUCT FROM ANNULUS AREA BETWEEN RPV AND GAMMA SHIELD	INDICATION
TE-052	A,B,C	SUCTION AT EACH DRYWELL COOLER	RECORD & ALARM
	D,E,F	DISCHARGE AT EACH DRYWELL COOLER	RECORD & ALARM
	G,H	SUPPLY DUCT TO UPPER DRYWELL	RECORD & ALARM
	J,K,L,M,N	AROUND RPV FLANGE	RECORD & ALARM
	P,R,S,T	SUPPRESSION CHAMBER FREE VOLUME	RECORD & ALARM
TE-053	A,B	LOWER DRYWELL (CRD PIPE TUNNEL)	INDICATION
	C,D	LOWER DRYWELL (CRD PIPE TUNNEL)	INDICATION
	E,F,G,H	LOWER DRYWELL (AROUND CRD PIPE HOUSING)	INDICATION
	J,K,L,M	LOWER DRYWELL (AROUND CRD PIPE NEAR AREA TO INTERNAL PUMP)	INDICATION

FIGURE 6.2-39 ATMOSPHERIC CONTROL SYSTEM P&ID (Sheet 2 of 3)

ABWR-STP AIA Amendment/Tier 2 Rev. 1

21-121

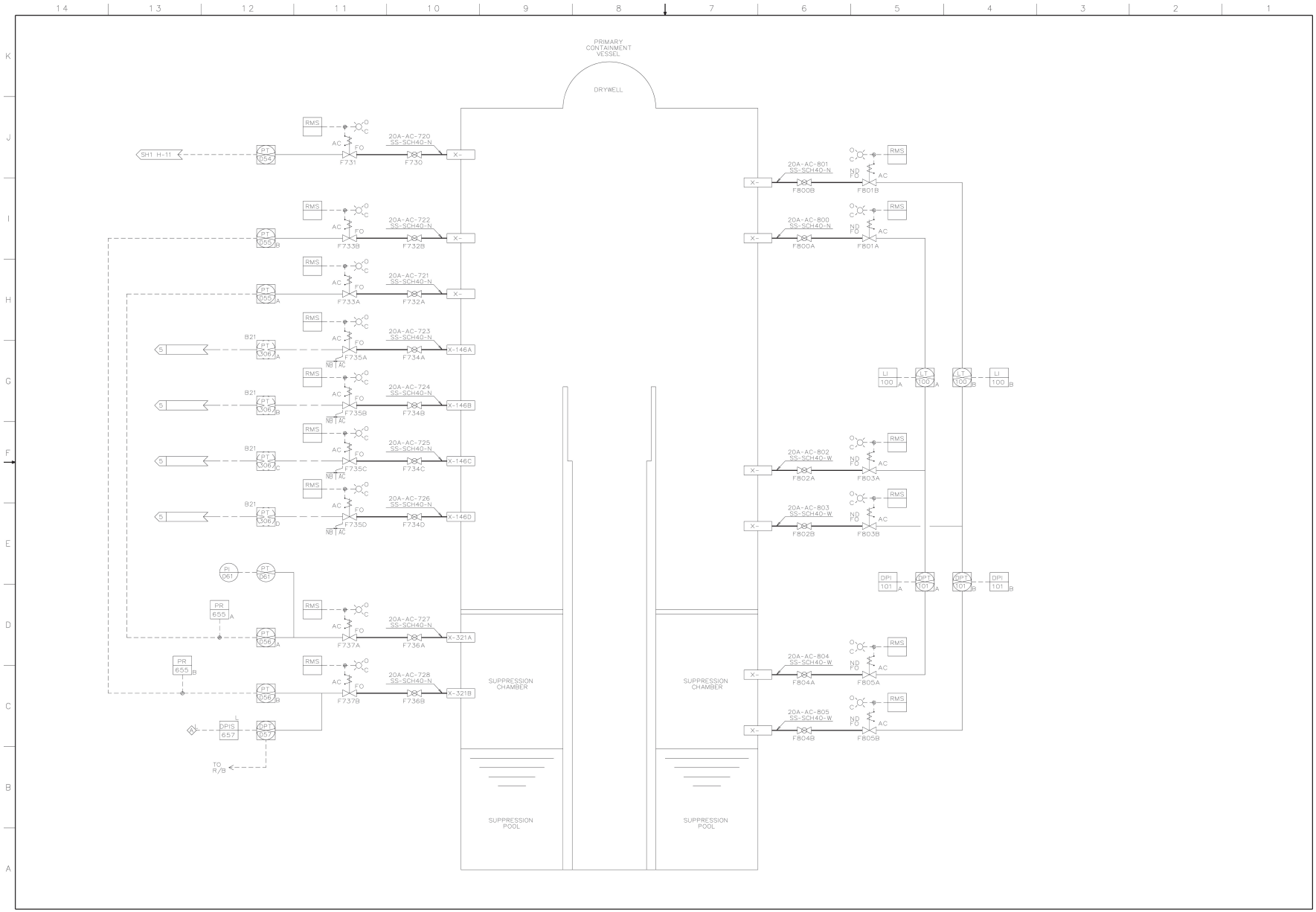

FIGURE 6.2-39 ATMOSPHERIC CONTROL SYSTEM P&ID (Sheet 3 of 3)

ABWR-STP AIA Amendment/Tier 2 Rev. 1

21-122