AMERICAN ELECTRIC POWER

COOK NUCLEAR PLANT TRAINING CENTER

Bridgman, Michigan

OPERATIONS JPM

TRAINING PROGRAM TITLE	INITIAL LICENSE TRAINING	**TIME:**	10 MINUTES
NUMBER AND TITLE:	NRC2010-A1a Calculate Reactor Vessel Void Vent Time	**REVISION:**	0
SCOPE OF REVISION	**Initial Issue.** **From: Audit06-A1a**		

			DATE:
PREPARED BY: (Exam Writer)	Name:	_____	
	Signature:	_____	_____
APPROVED BY: (Facility Reviewer)	Name:	_____	
	Signature:	_____	_____

REFERENCES/NRC KA/TASKS

Procedure:	1-OHP 4023 FR-I.3, R8				Response to Voids in Reactor Vessel
K/A Number:	EPE: 009 EA2.38				Ability to interpret existence of head bubble during SBLOCA.
	2.1.25				Ability to obtain and interpret station reference materials. (CFR: 41.7 / 45.5 to 45.8)
K/A Imp.:	RO:	3.9	SRO:	4.3	
		3.9		4.2	
Task Number:	EOP1090512				Mitigate the effects of voids in the reactor vessel

TRAINING AIDS/TOOLS/EQUIPMENT

None

HANDOUTS

Task Briefing
1-OHP 4023 FR-I.3, Response to Voids in Reactor Vessel, Attachemnt A, Instructions For Determaining Venting Time
1-OHP 4023 FR-I.3, Response to Voids in Reactor Vessel, Figure 1, Hydrogen Flow Rate Versus RCS Pressure

ATTACHMENTS

None

EVALUATION SETTINGS

Classroom

EVALUATION METHOD:	PERFORM: ☒	SIMULATE: ☐

SIMULATOR/LAB SETUP

None

EVALUATOR INSTRUCTIONS

1. Ensure simulator setup is complete
2. Brief the operator (May be performed by giving out Task Briefing Sheet)
3. Announce start of the JPM
4. Perform evolution
5. At completion of evolution, announce the JPM is complete.
6. Document evaluation performance.

TASK BRIEFING

You are the extra SRO from Unit 2.

The Unit 1 Control Room team is responding to a SBLOCA and is currently implementing ES-1.2, Post LOCA Cooldown and Depressurization. There has been significant voiding in the RCS. The Unit Supervisor has implemented FR-I.3, Response to Voids in Reactor Vessel.

The Unit Supervisor directs you to determine the maximum vent time for the Reactor vessel using Attachment A of FR-I.3. You are to report the calculated vent time to the US.

The following containment parameters were noted on 1-SG-18, Containment Air Temperature Recorder:

Point #	Point Id	Noun Name	Temperature (Deg F)
1	ETR-11	Upper Cont. 90	97
2	ETR-12	Upper Cont. 180	134
3	ETR-13	Upper Cont. 270	101
4	ETR-14	Upper Cont. 0	93
5	ETR-15	Lower Cont. Q1	173
6	ETR-16	Lower Cont. Q2	139
7	ETR-17	Lower Cont. Q3	129
8	ETR-18	Lower Cont. Q4	168
9	ETR-19	HV-CLV-1,4 Room	170
10	ETR-20	HV-CEQ-2 Room	151
11	ETR-21	HV-CLV-2,3 Room	146
12	ETR-22	INST Room	190
13	ETR-23	PZR Doghouse	367

RCS pressure is 1450 psig

Containment hydrogen concentration is 0.8%.

NOTE
Simulator Indications are NOT applicable to this JPM

GENERAL STANDARDS/PRECAUTIONS

Reactor Vessel Void Vent time is appropriately determined (+10% error) based upon initial conditions.

EXPECTED ACTIONS	CUES/STANDARDS ("**CS**" Indicates Critical Standard)

Number: 01-OHP-4023 FR-I.3	Title: RESPONSE TO VOIDS IN REACTOR VESSEL	Revision Number: 8

Attachment A
Instructions For Determining Venting Time

1. A = CNTMT Air Temperature (°R)

   = CNTMT temp (°F)* + 460

   = ____ °F + 460 = ____ °R

2. B = CNTMT Air Volume at STP

   = 1.24×10^{06} ft^3 x $\frac{492°R}{A}$

   = 1.24×10^{06} ft^3 x $\frac{492°R}{___°R}$

   = _____ ft^3

3. C = Maximum Hydrogen volume that can be vented

   = $\frac{(3.0\% - \text{CNTMT Hydrogen Concentration}) \times B}{100\%}$

   = $\frac{(3.0\% - \quad \%) \times \quad ft^3}{100\%}$

   = _____ ft^3

4. D = Hydrogen Flow Rate as a function of RCS pressure

   = Value from FIGURE 1 = _____ SCFM

5. E = Maximum venting time in minutes

   = $\frac{C}{D}$

   = $\frac{_____ ft^3}{_____ SCFM}$ = _____ minutes

*1-SG-18, Containment Air Temperature Recorder
Upper Containment, Average of Points 2, 4, and 10

-END OF ATTACHMENT-

(Attachment A, page 1 of 1)

Page 19 of 19

STANDARD: **(CS)** Determines Average Temp is 126 Deg F. (Points 2, 4, & 10 as per note at bottom of page)
SAT: ☐ UNSAT: ☐

STANDARD: Determine 586 Deg R
SAT: ☐ UNSAT: ☐

STANDARD: Determines 1.041×10^6 ft^3
SAT: ☐ UNSAT: ☐

STANDARD: Determines 2.290×10^4. ft^3
SAT: ☐ UNSAT: ☐

STANDARD: **(CS)**: Determines 3300 ± 100 SCFM
SAT: ☐ UNSAT: ☐

STANDARD: **(CS)** Determines 6.94 (range of 6.7 – 7.2) minutes.
SAT: ☐ UNSAT: ☐

JPM TERMINATION: Reports to US a vent time

Task Briefing

You are the extra SRO from Unit 2.

The Unit 1 Control Room team is responding to a SBLOCA and is currently implementing ES-1.2, Post LOCA Cooldown and Depressurization. There has been significant voiding in the RCS. The Unit Supervisor has implemented FR-I.3, Response to Voids in Reactor Vessel.

The Unit Supervisor directs you to determine the maximum vent time for the Reactor vessel using Attachment A of FR-I.3. You are to report the calculated vent time to the US.

The following containment parameters were noted on 1-SG-18, Containment Air Temperature Recorder:

Point #	Point Id	Noun Name	Temperature (Deg F)
1	ETR-11	Upper Cont. 90	97
2	ETR-12	Upper Cont. 180	134
3	ETR-13	Upper Cont. 270	101
4	ETR-14	Upper Cont. 0	93
5	ETR-15	Lower Cont. Q1	173
6	ETR-16	Lower Cont. Q2	139
7	ETR-17	Lower Cont. Q3	129
8	ETR-18	Lower Cont. Q4	168
9	ETR-19	HV-CLV-1,4 Room	170
10	ETR-20	HV-CEQ-2 Room	151
11	ETR-21	HV-CLV-2,3 Room	146
12	ETR-22	INST Room	190
13	ETR-23	PZR Doghouse	367

RCS pressure is 1450 psig

Containment hydrogen concentration is 0.8%.

AMERICAN ELECTRIC POWER

COOK NUCLEAR PLANT TRAINING CENTER

Bridgman, Michigan

OPERATIONS JPM

TRAINING PROGRAM TITLE	INITIAL LICENSE TRAINING	**TIME:**	30 MINUTES
NUMBER AND TITLE:	NRC2010-A1b-RO Determination Of Reactor Shutdown Margin	**REVISION:**	0
SCOPE OF REVISION	**Initial Issue.** **From: Audit08-A1b-RO**		

			DATE:
PREPARED BY: (Exam Writer)	Name:	_____	
	Signature:	_____	_____
APPROVED BY: (Facility Reviewer)	Name:	_____	
	Signature:	_____	_____

REFERENCES/NRC KA/TASKS

Procedure:	2-OHP-4021-001-012, R16	Determination of Reactor Shutdown Margin
Misc:	Unit 2 Technical Data Book	Cycle 18
K/A Number:	SYS 001 A4.11	Ability to manually determine shutdown margin in the control room.
K/A Imp.:	RO: 3.5 SRO: 4.1	
Task Number:	0010010501	Calculate Reactor Shutdown Margin.

TRAINING AIDS/TOOLS/EQUIPMENT

None

HANDOUTS

Task Briefing
2-OHP-4021-001-012, R16 Determination of Reactor Shutdown Margin, Attachment 1, Manual Shutdown Boron Calculation for Modes 3, 4, or 5.
Copy of Unit 2 Technical Data Book curves (Section 1, 4, 8.3 series)

ATTACHMENTS

None

EVALUATION SETTINGS

Classroom.

EVALUATION METHOD:	PERFORM: ☒	SIMULATE: ☐

SIMULATOR/LAB SETUP

None.

EVALUATOR INSTRUCTIONS

1. Ensure simulator setup is complete
2. Brief the operator (May be performed by giving out Task Briefing Sheet)
3. Announce start of the JPM
4. Perform evolution
5. At completion of evolution, announce the JPM is complete.
6. Document evaluation performance.

TASK BRIEFING

You are an extra Control Room Operator on Unit 2.

The Unit Supervisor has directed you to calculate the SHUTDOWN MARGIN using Attachment 1 of 02-OHP-4021-001-012, Determination of Reactor Shutdown Margin.

The reactor tripped from 100% steady state operations 32 hours ago. A Shutdown Margin Calculation Using Xenon Correction was performed to begin the cooldown.

You are to calculate the required Shutdown Boron Concentration for the **CURRENT** RCS conditions without use of the optional Xenon Correction.

- NERDS is NOT available.
- RCS Temperature is currently 215°F.
- PPC point U0035 indicates 8500 MWD/MTU
- RCS boron concentration is 1810 ppm per a chemistry sample taken 30 minutes ago.
- All Rods are fully inserted except Control Bank D Rod D-12 which indicates 105 steps.

NOTE
Simulator Indications are NOT applicable to this JPM

GENERAL STANDARDS/PRECAUTIONS

The net excess shutdown margin has been determined.

EXPECTED ACTIONS	CUES/STANDARDS ("**CS**" Indicates Critical Standard)

Continuous	02-OHP-4021-001-012	Rev. 16	Page 6 of 35
Determination of Reactor Shutdown Margin			
Attachment 1	Manual Shutdown Boron Calculation for Mode 3, 4, or 5		Pages: 5 - 17

3.6 Cold shutdown (cold zero power - 68°F) SHUTDOWN MARGIN must be established prior to blocking P-11 or P-12 during a normal cooldown. If cooldown is urgent, verification of SHUTDOWN MARGIN need **NOT** be complete prior to starting the cooldown. [Ref. 7.2.2b]

3.7 **IF** Core burnup is greater than the maximum value listed in the Technical Data Book, **THEN** it is acceptable to use the maximum core burnup value in the Shutdown Margin Calculation or use NERDS because it will predict a conservative Shutdown Margin value.

CAUTION: It is essential to use the proper mathematical sign (+ or -) and include proper sign when performing calculations.

NOTE:
- Curves should be read as accurately as possible.
- This procedure is referenced for use in the Emergency Operating Procedures. Use of this procedure as directed by the EOP series is subject to rules of usage found in OHI-4023.

4 DETAILS **INIT**

4.1 Cycle data:

4.1.1 Enter Cycle number from Technical Data Book (TDB):

Unit 2 Cycle _____ _____

4.1.2 Enter Date and Time of Shutdown:

Date:_____ Time:_____ _____

ACTIONS:

Instructor Note: IF candidate states that the previous Shutdown Margin calculation is No longer valid (Since it used Xenon correction and it is now > 30 hours), THEN:
- Acknowledge that the Unit Supervisor will address that issue.
- Direct candidate to complete the Shutdown Margin as directed.

STANDARD: Records cycle number 18 from Technical Data Book.
SAT: ☐ UNSAT: ☐

STANDARD: Enters Time and Date
SAT: ☐ UNSAT: ☐

EXPECTED ACTIONS	CUES/STANDARDS ("**CS**" Indicates Critical Standard)

Continuous	02-OHP-4021-001-012	Rev. 16	Page 7 of 35
Determination of Reactor Shutdown Margin			
Attachment 1	Manual Shutdown Boron Calculation for Mode 3, 4, or 5		Pages: 5 - 17

CAUTION: If the optional xenon correction is used, operators must be alert to changes in the required boron concentration to maintain SHUTDOWN MARGIN and take required actions prior to expiration of xenon correction time frame.

SHUTDOWN MARGIN calculations which include optional xenon correction expire 30 hours after shutdown.

4.2 SHUTDOWN MARGIN Expiration:

IF the optional xenon correction is to be used, **THEN** enter date AND time which follows unit shutdown by 30 hours:

SHUTDOWN MARGIN Expiration:

Date:_____ Time:_____ _____

N/A – Optional Xenon Correction NOT required.

4.3 Core Burnup:

- **IF** the Plant Process Computer (PPC) is available, **THEN** enter Core Burnup value from Plant PPC point U0035 **AND** divide by 1000 to convert the burnup from MWD/MTU to GWD/MTU:

PPC Point U0035		MWD/MTU
	÷	
conversion factor	1000	MWD/GWD
Core Burnup from PPC	=	GWD/MTU _____

PPC point U0035 reading of 8500 MWD/MTU is given in briefing.

STANDARD: Determines 8.5 GWD/MTU is burnup
SAT: ☐ UNSAT: ☐

-OR-

- **IF** the PPC is **NOT** available, **THEN** obtain Core Burnup value from Reactor Engineering:

Core Burnup from Reactor Engineering		GWD/MTU _____

N/A – Obtained from PPC

EXPECTED ACTIONS	CUES/STANDARDS ("**CS**" Indicates Critical Standard)
	STANDARD: Enters RCS Temperature of 215°F SAT: ☐ UNSAT: ☐
	STANDARD:P-11 and P-12 are blocked (Normal Cooldown Steps) SAT: ☐ UNSAT: ☐
	STANDARD: Mode 4 so penalty applies SAT: ☐ UNSAT: ☐
	Step 4.5 is N/A – Unit is in Mode 4 Following a Trip

Continuous	02-OHP-4021-001-012	Rev. 16	Page 8 of 35
Determination of Reactor Shutdown Margin			
Attachment 1	Manual Shutdown Boron Calculation for Mode 3, 4, or 5		Pages: 5 - 17

4.4 Plant Conditions for which SHUTDOWN MARGIN is being calculated:

Reactor Coolant System (RCS) Temperature [ ] °F _____

P-11 **AND/OR** P-12 safeguards actuation blocked? (✓) ❑ Yes ❑ No

Unit in MODE 4 or 5 (Boron Penalty)? (✓) ❑ Yes ❑ No _____

4.5 **IF** returning to MODE 5 from MODE 6 following refueling with newly configured fuel **AND** no applicable TDB figures are available for the new fuel cycle, **THEN** perform the following:

4.5.1 Review Tech Specs 3.1.1 and 3.9.1 _____

4.5.2 Perform one of the following:

- Contact Reactor Engineering for a determination of the minimum boron concentration for SHUTDOWN MARGIN **AND** enter the value in below. _____

  Minimum RCS Boron [ ] ppm _____

  -OR-

- Enter 2400 ppm for SHUTDOWN MARGIN below. _____

  Minimum RCS Boron [ ] ppm _____

4.5.3 Enter N/A in Steps 4.6, 4.7, 4.8, 4.9, and 4.10. _____

EXPECTED ACTIONS	CUES/STANDARDS ("**CS**" Indicates Critical Standard)

Continuous	02-OHP-4021-001-012	Rev. 16	Page 9 of 35
Determination of Reactor Shutdown Margin			
Attachment 1	Manual Shutdown Boron Calculation for Mode 3, 4, or 5		Pages: 5 - 17

4.6 Uncorrected Minimum Boron Concentration:

NOTE: To prevent over boration when SI is **NOT** blocked (Bullets 1 and 2 below), identify the RCS temperature you are "remaining in" or "transitioning to" for determining which Technical Data Book (TDB) Figure 4.5 Boron Concentration versus Cycle Burnup curve you are to utilize:

- **IF** RCS temperature is to remain greater than 541°F (for example, 547°F), **THEN** utilize bullet 1 below.
- **IF** RCS temperature is at 547°F **AND** it is anticipated that RCS temperature will go below 541°F, but remain above 510°F, **THEN** utilize bullet 2 below.

Using Plant Conditions for which boron concentration for SHUTDOWN MARGIN is being calculated (Step 4.4) and Core Burnup (Step 4.3), obtain the boron concentration and indicate curve on TDB Figure 4.5 used:

- **IF** RCS temperature is > 541°F, **THEN** use the 'T_{ave} > 541°F' curve. _____
- **IF** RCS temperature is > 510°F **AND** Safety Injection is **NOT** blocked, **THEN** use the 'T_{ave} > 510°F and Safety Injection **NOT** Blocked' curve. _____
- **IF** RCS temperature is ≥ 350°F **AND** Safety Injection is blocked, **THEN** use the 'T_{ave} ≥ 68°F MODE 3 with Safety Injection Blocked' curve. _____
- **IF** RCS temperature is ≥ 68°F MODE 4 or 5, **THEN** use the 'T_{ave} ≥ 68°F MODES 4 and 5 with Boron Penalty' curve. _____

Uncorrected Minimum Boron Concentration [ ] ppm _____

Uses Figure 4.5 Curve for Mode 4 and 5 with Boron Penalty (Top Line)

STANDARD: **(CS)** Determines Uncorrected Boron Concentration is 1910 to 1930 PPM

SAT: ☐ UNSAT: ☐

EXPECTED ACTIONS	CUES/STANDARDS ("**CS**" Indicates Critical Standard)
	Rod D-12 is stuck out at 105 steps.
4.7 **IF** rods are stuck out, **THEN** determine the correction for stuck out rods:	
4.7.1 Using Core Burnup (Step 4.3) determine the Worth of a Single Stuck Out Rod from TDB Figure 1.3b and enter below:	STANDARD: **(CS)** Enters 1 for 1 stuck rod SAT: ☐ UNSAT: ☐
4.7.2 Multiply Worth of Single Stuck Out Rod by the number of stuck out rods.	STANDARD: **(CS)** Determines worth of stuck rod is 590 to 610 pcm SAT: ☐ UNSAT: ☐
Number of stuck rods [ ] x Worth of a Single Stuck Rod [ ] pcm Total Stuck Out Rod Worth = [ ] pcm _____	STANDARD: **(CS)** Enters total stuck rod worth of 590 to 610 pcm SAT: ☐ UNSAT: ☐
4.8 **IF** optional Xenon correction is required, **THEN** perform either 4.8.1, 4.8.2, **OR** 4.8.3:	Step 4.8 is N/A – Per briefing, Xenon Correction is NOT used.
4.8.1 **IF** Xenon equilibrium has been reached before the Reactor trip, **THEN** use one of the following to determine Xenon reactivity for the 30th hour following the unit shutdown:	
NOTE: The lower Power level curve should be used for conservatism.	
• TDB 2 Figure 8.3.a, Total Xenon Reactivity Worth Following Shutdown, BOC _____	
• TDB 2 Figure 8.3.b, Total Xenon Reactivity Worth Following Shutdown, MOC _____	
• TDB 2 Figure 8.3.c, Total Xenon Reactivity Worth Following Shutdown, EOC _____	
4.8.2 Run PPC Xenon Predict Program for the 30th hour following the unit shutdown. _____	

Continuous	02-OHP-4021-001-012	Rev. 16	Page 10 of 35
Determination of Reactor Shutdown Margin			
Attachment 1	Manual Shutdown Boron Calculation for Mode 3, 4, or 5		Pages: 5 - 17

EXPECTED ACTIONS	CUES/STANDARDS ("**CS**" Indicates Critical Standard)

Continuous	02-OHP-4021-001-012	Rev. 16	Page 11 of 35
Determination of Reactor Shutdown Margin			
Attachment 1	Manual Shutdown Boron Calculation for Mode 3, 4, or 5		Pages: 5 - 17

4.8.3 Contact Reactor Engineering for Predicted Xenon for the 30th hour following the unit shutdown. _____

4.8.4 Enter Xenon Reactivity value from either Step 4.8.1, 4.8.2, or 4.8.3 for the 30th hour following the unit shutdown:

Xenon Reactivity [ ] pcm _____

4.9 **IF** there are corrections for stuck rods or xenon, **THEN** calculate Total Correction for the Minimum Boron Concentration as follows:

4.9.1 Combined Reactivity for Stuck Rods and Xenon:

Add Total Stuck Rod Worth to Xenon Reactivity, include proper mathematical signs in the calculation.

Total Stuck Out Rod Worth (Step 4.7) [ ] pcm

\+

Xenon Reactivity (Step 4.8.4) [ ] pcm

Combined Reactivity = [ ] pcm _____

STANDARD: **(CS)** Enters total stuck rod worth of 590 to 610 pcm
SAT: ☐ UNSAT: ☐

STANDARD: Enters 0 for Xenon reactivity
SAT: ☐ UNSAT: ☐

STANDARD: **(CS)** Enters Combined Reactivity of 590 to 610 pcm
SAT: ☐ UNSAT: ☐

EXPECTED ACTIONS	CUES/STANDARDS ("**CS**" Indicates Critical Standard)

Continuous	02-OHP-4021-001-012	Rev. 16	Page 12 of 35
Determination of Reactor Shutdown Margin			
Attachment 1	Manual Shutdown Boron Calculation for Mode 3, 4, or 5		Pages: 5 - 17

4.9.2 Boron Worth:

Obtain Boron Worth from TDB Figure 4.1.b, 4.1.c, or 4.1.d using the following parameters **AND** enter the value below.

- Core Burnup (Step 4.3)
- RCS Temperature* (Step 4.4)
- Uncorrected Minimum Boron Concentration (Step 4.6)

***IF** a TDB figure is **NOT** available for the recorded RCS temperature, **THEN** use the following guidance:

- **IF** Combined Reactivity (Step 4.9.1) is GREATER THAN 0, **THEN** the TDB Figure with the nearest HIGHER temperature shall be used.
- **IF** Combined Reactivity (Step 4.9.1) is LESS THAN 0, **THEN** the TDB figure with the nearest LOWER temperature shall be used.

Boron Worth [ ] pcm/ppm _____

4.9.3 Delta Boron:

Divide Combined Reactivity by Boron Worth.

Combined Reactivity (Step 4.9.1) [ ] pcm

÷

Boron Worth (Step 4.9.2) [ ] pcm/ppm

Delta Boron = [ ] ppm _____

STANDARD: **(CS)** Uses figure 4.1.c since Combined Reactivity is >0 and RCS Temperature is 215°F
SAT: ☐ UNSAT: ☐

STANDARD: **(CS)** Uses MOC line at Boron Concentration of ~ 1920 PPM to obtain Differential Boron Worth of "-9.15 to to -9.35 pcm/ppm".
SAT: ☐ UNSAT: ☐

STANDARD: Enters Combined Reactivity of 590 to 610 pcm
SAT: ☐ UNSAT: ☐

STANDARD: Enters DBW of "-9.15 to to -9.35 pcm/ppm".
SAT: ☐ UNSAT: ☐

STANDARD: **(CS)** Calculates Delta Boron of "-63.10 to – 66.67 ppm"
SAT: ☐ UNSAT: ☐

EXPECTED ACTIONS	CUES/STANDARDS ("**CS**" Indicates Critical Standard)

Continuous	02-OHP-4021-001-012	Rev. 16	Page 13 of 35
Determination of Reactor Shutdown Margin			
Attachment 1	Manual Shutdown Boron Calculation for Mode 3, 4, or 5		Pages: 5 - 17

4.9.4 Adjusted Boron Concentration:

Subtract Delta Boron from Uncorrected Minimum Boron Concentration

Uncorrected Minimum Boron Concentration (Step 4.6)		ppm
-		
Delta Boron (Step 4.9.3)		ppm
Adjusted Boron Concentration	=	ppm _____

4.9.5 Adjusted Boron Worth:

Obtain Boron Worth from TDB Figure 4.1.b, 4.1.c, or 4.1.d using the following parameters **AND** enter the value below.

- Core Burnup (Step 4.3)
- RCS Temperature* (Step 4.4)
- Adjusted Boron Concentration (Step 4.9.4)

***IF** a TDB figure is **NOT** available for the recorded RCS temperature, **THEN** use the following guidance:

- **IF** Combined Reactivity (Step 4.9.1) is GREATER THAN 0, **THEN** the TDB Figure with the nearest HIGHER temperature shall be used.
- **IF** Combined Reactivity (Step 4.9.1) is LESS THAN 0, **THEN** the TDB figure with the nearest LOWER temperature shall be used.

Adjusted Boron Worth		pcm/ppm _____

STANDARD: Enters Uncorrected Boron Concentration is 1910 to 1930 ppm
SAT: ☐ UNSAT: ☐

STANDARD: Enters Delta Boron of "-63.10 to – 66.67 ppm"
SAT: ☐ UNSAT: ☐

STANDARD: **(CS)** Calculates Adjusted Boron Concentration of 1973.1 to 1996.67 ppm
SAT: ☐ UNSAT: ☐

STANDARD: **(CS)** Uses figure 4.1.c since Combined Reactivity is >0 and RCS Temperature is 215°F
SAT: ☐ UNSAT: ☐

STANDARD: **(CS)** Uses MOC line at Adjusted Boron Concentration of ~ 1984.9 ppm to obtain Differential Boron Worth of "-9.1 to -9.3 pcm/ppm".
SAT: ☐ UNSAT: ☐

EXPECTED ACTIONS	CUES/STANDARDS ("**CS**" Indicates Critical Standard)

Continuous	02-OHP-4021-001-012	Rev. 16	Page 14 of 35
Determination of Reactor Shutdown Margin			
Attachment 1	Manual Shutdown Boron Calculation for Mode 3, 4, or 5		Pages: 5 - 17

4.9.6 Correction for Minimum Boron:

Divide Combined Reactivity by Adjusting Boron Worth.

Combined Reactivity (Step 4.9.1)		pcm
÷		
Adjusted Boron Worth (Step 4.9.5)		pcm/ppm
Delta Boron	=	ppm _____

4.9.7 Corrected Minimum Boron Concentration:

Subtract Correction for Minimum Boron from Uncorrected Minimum Boron Concentration.

Uncorrected Minimum Boron Concentration (Step 4.6)		ppm
-		
Correction for Minimum Boron (Step 4.9.6)		ppm
Corrected Minimum Boron Concentration	=	ppm _____

STANDARD: Enters Combined Reactivity of 590 to 610 pcm
SAT: ☐ UNSAT: ☐

STANDARD: Enters DBW of "-9.1 to -9.3 pcm/ppm"
SAT: ☐ UNSAT: ☐

STANDARD: **(CS)** Calculates Delta Boron of "-63.4 to –67.0 ppm"
SAT: ☐ UNSAT: ☐

STANDARD: Enters Uncorrected Boron Concentration is 1910 to 1930 ppm

SAT: ☐ UNSAT: ☐

STANDARD: Enters Delta Boron of "-63.4 to –67.0 ppm"
SAT: ☐ UNSAT: ☐

STANDARD: **(CS)** Calculates Adjusted Boron Concentration of 1973.4 to 1997.0 ppm
SAT: ☐ UNSAT: ☐

EXPECTED ACTIONS	CUES/STANDARDS ("**CS**" Indicates Critical Standard)

Continuous	02-OHP-4021-001-012	Rev. 16	Page 15 of 35
Determination of Reactor Shutdown Margin			
Attachment 1	Manual Shutdown Boron Calculation for Mode 3, 4, or 5		Pages: 5 - 17

4.10 Minimum RCS Boron Required:

4.10.1 **IF** there is NO correction for stuck rods or xenon to Minimum Boron Concentration calculated (Step 4.9 is N/A), **THEN** enter Uncorrected Minimum Boron Concentration (Step 4.6) value below. _____

-OR-

4.10.2 **IF** there is a correction for stuck rods or xenon to Minimum Boron Concentration calculated (Step 4.9), **AND**

Step 4.10.1 is N/A – Correction for Stuck rod is required.

Step 4.10.2 is N/A – Concentration is < 2200 PPM

NOTE: 2200 ppm is sufficient to ensure that SHUTDOWN MARGIN is maintained with any number of rods failing to be fully inserted. [Ref. 7.2.1d]

- Corrected Minimum Boron Concentration (Step 4.9.7) is GREATER THAN 2200 ppm, **THEN** enter 2200 ppm below. _____

-OR-

- Corrected Minimum Boron Concentration (Step 4.9.7) is LESS THAN 2200 ppm, **THEN** enter the Corrected Minimum Boron Concentration value below. _____

Minimum RCS Boron Required [ ] ppm _____

STANDARD: **(CS)** Enters Required Boron Concentration of 1973.4 to 1997.0 ppm
SAT: ☐ UNSAT: ☐
NOTE: If Candidate determines Minimum Boron Concentration is NOT MET and Emergency Boration is required, the JPM may be terminated.

4.11 Record the current RCS boron concentration as determined from chemistry sampling from Data Sheet 1, RCS Boron Concentration Sample request, which was initiated in Step 2.1 **OR** the last recorded RCS boron sample result if no significant boration or dilution has occurred since the last sample time.

RCS Boron Concentration [ ] ppm

STANDARD: Enters Current RCS Boron Concentration of 1810 PPM
SAT: ☐ UNSAT: ☐

Chemistry Sample Date: _____ Time: _____ _____

STANDARD: Enters sample time of Today's date and 30 minutes ago
SAT: ☐ UNSAT: ☐

EXPECTED ACTIONS	CUES/STANDARDS ("**CS**" Indicates Critical Standard)

Continuous	02-OHP-4021-001-012	Rev. 16	Page 16 of 35
Determination of Reactor Shutdown Margin			
Attachment 1	Manual Shutdown Boron Calculation for Mode 3, 4, or 5		Pages: 5 - 17

4.12 Boration Requirement:

Subtract the RCS Boron Concentration from the Minimum RCS Boron Required:

Minimum RCS Boron Required (Step 4.5 **OR** Step 4.10)		ppm	
	–		
RCS Boron Concentration (Step 4.11)		ppm	
Result	=	ppm	_____

Is Boration Required? (✓) ❑ Yes ❑ No _____

- **IF** the result is zero or negative, **THEN** check "NO" and boration is **NOT** required. _____

-OR-

- **IF** the result is positive, **THEN** check "Yes" **AND**:

  a. **IF** TS required SHUTDOWN MARGIN requirements are **NOT** met for current plant conditions, **THEN** emergency borate per 02-OHP-4021-005-007, Operation of Emergency Boration Flow Paths, to the Minimum RCS Boron Required concentration listed in Step 4.12. _____

  -OR-

  b. **IF** SHUTDOWN MARGIN requirements are met for current plant conditions, **THEN** borate as directed by the Unit Supervisor (US). _____

STANDARD: **(CS)** Enters Required Boron Concentration of 1973.4 to 1997.0 ppm
SAT: ☐ UNSAT: ☐

STANDARD: Enters Current RCS Boron Concentration of 1810 ppm
SAT: ☐ UNSAT: ☐

STANDARD: Determines Difference is 163.4 to 187.0 ppm
SAT: ☐ UNSAT: ☐

STANDARD: **(CS)** Informs US that Shutdown Margin is NOT met and that Emergency Boration is Required.
SAT: ☐ UNSAT: ☐

JPM TERMINATION: When operator Determines that Emergency Boration is required since the Shutdown Margin is NOT met, then **"JPM is Complete."**

EXPECTED ACTIONS	CUES/STANDARDS ("**CS**" Indicates Critical Standard)
	No actions required.

Continuous	02-OHP-4021-001-012	Rev. 16	Page 17 of 35
Determination of Reactor Shutdown Margin			
Attachment 1	Manual Shutdown Boron Calculation for Mode 3, 4, or 5		Pages: 5 - 17

Comments:

_____
_____
_____
_____

Calculated By: _____ Time: _____ Date: ___/___/___

Calculation Independently Verified By: _____ Time: _____ Date: ___/___/___

Reviewed By: _____ Date: ___/___/___
US/SM/WCC-SRO

Task Briefing

You are an extra Control Room Operator on Unit 2.

The Unit Supervisor has directed you to calculate the SHUTDOWN MARGIN using Attachment 1 of 02-OHP-4021-001-012, Determination of Reactor Shutdown Margin.

The reactor tripped from 100% steady state operations 32 hours ago. A Shutdown Margin Calculation Using Xenon Correction was performed to begin the cooldown.

You are to calculate the required Shutdown Boron Concentration for the **CURRENT** RCS conditions without use of the optional Xenon Correction.

- NERDS is NOT available.
- RCS Temperature is currently 215°F.
- PPC point U0035 indicates 8500 MWD/MTU
- RCS boron concentration is 1810 ppm per a chemistry sample taken 30 minutes ago.
- All Rods are fully inserted except Control Bank D Rod D-12 which indicates 105 steps.

NOTE
Simulator Indications are NOT applicable to this JPM

AMERICAN ELECTRIC POWER

COOK NUCLEAR PLANT TRAINING CENTER

Bridgman, Michigan

OPERATIONS JPM

TRAINING PROGRAM TITLE	INITIAL LICENSE TRAINING	**TIME:**	30 MINUTES
NUMBER AND TITLE:	NRC2010-A1b-SRO SRO Review - Determination Of Reactor Shutdown Margin	**REVISION:**	0
SCOPE OF REVISION	**Initial Issue.** **From: Audit08-A1b-SRO**		

			DATE:
PREPARED BY: (Exam Writer)	Name:	_____	
	Signature:	_____	_____
APPROVED BY: (Facility Reviewer)	Name:	_____	
	Signature:	_____	_____

REFERENCES/NRC KA/TASKS

Procedure:	2-OHP-4021-001-012, R16	Determination of Reactor Shutdown Margin
Misc:	Unit 2 Technical Data Book	Cycle 18
K/A Number:	SYS 001 A4.11	Ability to manually determine shutdown margin in the control room.
K/A Imp.:	RO: 3.5 SRO: 4.1	
Task Number:	0010010501	Calculate Reactor Shutdown Margin.

TRAINING AIDS/TOOLS/EQUIPMENT

None

HANDOUTS

Task Briefing
2-OHP-4021-001-012, R16 Determination of Reactor Shutdown Margin, Attachment 1, Manual Shutdown Boron Calculation for Modes 3, 4, or 5.
Copy of Unit 2 Technical Data Book curves (Section 1, 4, 8.3 series)

ATTACHMENTS

None

EVALUATION SETTINGS

Classroom.

EVALUATION METHOD:	PERFORM: ☒	SIMULATE: ☐

SIMULATOR/LAB SETUP

None.

EVALUATOR INSTRUCTIONS

1. Ensure simulator setup is complete
2. Brief the operator (May be performed by giving out Task Briefing Sheet)
3. Announce start of the JPM
4. Perform evolution
5. At completion of evolution, announce the JPM is complete.
6. Document evaluation performance.

TASK BRIEFING

You are the Unit Supervisor on Unit 2. Per your direction, the extra Control Room Operator completed Attachment 2 of 02-OHP-4021-001-012, Determination of Reactor Shutdown Margin.

The reactor tripped from 100% steady state operations 32 hours ago.

The RO calculated the required Shutdown Boron Concentration for the CURRENT RCS conditions without use of the optional Xenon Correction.

- NERDS is NOT available.
- RCS Temperature is currently 215°F.
- PPC point U0035 indicates 8500 MWD/MTU
- RCS boron concentration is 1810 ppm per a chemistry sample taken 30 minutes ago.
- All Rods are fully inserted except Control Bank D Rod D-12 which indicates 105 steps.

Perform a complete review of the completed Attachment 1, noting all errors.

NOTE
Simulator Indications are NOT applicable to this JPM.

GENERAL STANDARDS/PRECAUTIONS

The net excess shutdown margin has been determined.

EXPECTED ACTIONS	CUES/STANDARDS ("**CS**" Indicates Critical Standard)

Continuous	02-OHP-4021-001-012	Rev. 16	Page 6 of 35
Determination of Reactor Shutdown Margin			
Attachment 1	Manual Shutdown Boron Calculation for Mode 3, 4, or 5		Pages: 5 - 17

3.6 Cold shutdown (cold zero power - 68°F) SHUTDOWN MARGIN must be established prior to blocking P-11 or P-12 during a normal cooldown. If cooldown is urgent, verification of SHUTDOWN MARGIN need **NOT** be complete prior to starting the cooldown. [Ref. 7.2.2b]

3.7 **IF** Core burnup is greater than the maximum value listed in the Technical Data Book, **THEN** it is acceptable to use the maximum core burnup value in the Shutdown Margin Calculation or use NERDS because it will predict a conservative Shutdown Margin value.

CAUTION: It is essential to use the proper mathematical sign (+ or -) and include proper sign when performing calculations.

NOTE:
- Curves should be read as accurately as possible.
- This procedure is referenced for use in the Emergency Operating Procedures. Use of this procedure as directed by the EOP series is subject to rules of usage found in OHI-4023.

4 DETAILS **INIT**

4.1 Cycle data:

4.1.1 Enter Cycle number from Technical Data Book (TDB):

Unit 2 Cycle 18 TC

4.1.2 Enter Date and Time of Shutdown:

Date:_____ Time:_____ TC

ACTIONS:

Instructor Note: IF candidate states that the previous Shutdown Margin calculation is No longer valid (Since it used Xenon correction and it is now > 30 hours), THEN:
- Acknowledge that the Unit Supervisor will address that issue.
- Direct candidate to complete the Shutdown Margin as directed.

STANDARD: Records cycle number 18 from Technical Data Book.
SAT: ☐ UNSAT: ☐

STANDARD: Enters Time and Date
SAT: ☐ UNSAT: ☐

EXPECTED ACTIONS	CUES/STANDARDS ("**CS**" Indicates Critical Standard)

Continuous	02-OHP-4021-001-012	Rev. 16	Page 7 of 35
Determination of Reactor Shutdown Margin			
Attachment 1	Manual Shutdown Boron Calculation for Mode 3, 4, or 5		Pages: 5 - 17

CAUTION: If the optional xenon correction is used, operators must be alert to changes in the required boron concentration to maintain SHUTDOWN MARGIN and take required actions prior to expiration of xenon correction time frame.

SHUTDOWN MARGIN calculations which include optional xenon correction expire 30 hours after shutdown.

4.2 SHUTDOWN MARGIN Expiration:

IF the optional xenon correction is to be used, **THEN** enter date AND time which follows unit shutdown by 30 hours:

SHUTDOWN MARGIN Expiration:

Date: N/A Time: N/A

yc Xenon Correction NOT USED N/A

4.3 Core Burnup:

- **IF** the Plant Process Computer (PPC) is available, **THEN** enter Core Burnup value from Plant PPC point U0035 **AND** divide by 1000 to convert the burnup from MWD/MTU to GWD/MTU:

PPC Point U0035	8500	MWD/MTU
	÷	
conversion factor	1000	MWD/GWD
Core Burnup from PPC	= 8.5	GWD/MTU TC

-OR-

- **IF** the PPC is **NOT** available, **THEN** obtain Core Burnup value from Reactor Engineering:

Core Burnup from Reactor Engineering	N/A	GWD/MTU N/A

N/A – Optional Xenon Correction NOT required.

PPC point U0035 reading of 8500 MWD/MTU is given in briefing.

STANDARD: Determines 8.5 GWD/MTU is burnup
SAT: ☐ UNSAT: ☐

N/A – Obtained from PPC

EXPECTED ACTIONS	CUES/STANDARDS ("**CS**" Indicates Critical Standard)

Continuous	02-OHP-4021-001-012	Rev. 16	Page 8 of 35
Determination of Reactor Shutdown Margin			
Attachment 1	Manual Shutdown Boron Calculation for Mode 3, 4, or 5		Pages: 5 - 17

4.4 Plant Conditions for which SHUTDOWN MARGIN is being calculated:

Reactor Coolant System (RCS) Temperature [215] °F TC

P-11 **AND/OR** P-12 safeguards actuation blocked? (✓) ☒ Yes ☐ No

Unit in MODE 4 or 5 (Boron Penalty)? (✓) ☒ Yes ☐ No TC

4.5 **IF** returning to MODE 5 from MODE 6 following refueling with newly configured fuel **AND** no applicable TDB figures are available for the new fuel cycle, **THEN** perform the following:

4.5.1 Review Tech Specs 3.1.1 and 3.9.1 TC Shutdown from 100% N/A

4.5.2 Perform one of the following:

- Contact Reactor Engineering for a determination of the minimum boron concentration for SHUTDOWN MARGIN **AND** enter the value in below.

  Minimum RCS Boron [ ] ppm

  -OR-

- Enter 2400 ppm for SHUTDOWN MARGIN below.

  Minimum RCS Boron [ ] ppm

4.5.3 Enter N/A in Steps 4.6, 4.7, 4.8, 4.9, and 4.10.

STANDARD: Enters RCS Temperature of 215°F
SAT: ☐ UNSAT: ☐

STANDARD: P-11 and P-12 are blocked (Normal Cooldown Steps)
SAT: ☐ UNSAT: ☐

STANDARD: Mode 4 so penalty applies
SAT: ☐ UNSAT: ☐

Step 4.5 is N/A – Unit is in Mode 4 Following a Trip

EXPECTED ACTIONS	CUES/STANDARDS ("**CS**" Indicates Critical Standard)

Continuous	02-OHP-4021-001-012	Rev. 16	Page 9 of 35
Determination of Reactor Shutdown Margin			
Attachment 1	Manual Shutdown Boron Calculation for Mode 3, 4, or 5		Pages: 5 - 17

4.6 Uncorrected Minimum Boron Concentration:

NOTE: To prevent over boration when SI is **NOT** blocked (Bullets 1 and 2 below), identify the RCS temperature you are "remaining in" or "transitioning to" for determining which Technical Data Book (TDB) Figure 4.5 Boron Concentration versus Cycle Burnup curve you are to utilize:

- **IF** RCS temperature is to remain greater than 541°F (for example, 547°F), **THEN** utilize bullet 1 below.
- **IF** RCS temperature is at 547°F **AND** it is anticipated that RCS temperature will go below 541°F, but remain above 510°F, **THEN** utilize bullet 2 below.

Using Plant Conditions for which boron concentration for SHUTDOWN MARGIN is being calculated (Step 4.4) and Core Burnup (Step 4.3), obtain the boron concentration and indicate curve on TDB Figure 4.5 used:

- **IF** RCS temperature is > 541°F, **THEN** use the 'T_{ave} > 541°F' curve. N/A
- **IF** RCS temperature is > 510°F **AND** Safety Injection is **NOT** blocked, **THEN** use the 'T_{ave} > 510°F and Safety Injection **NOT** Blocked' curve. N/A
- **IF** RCS temperature is ≥ 350°F **AND** Safety Injection is blocked, **THEN** use the 'T_{ave} ≥ 68°F MODE 3 with Safety Injection Blocked' curve. N/A
- **IF** RCS temperature is ≥ 68°F MODE 4 or 5, **THEN** use the 'T_{ave} ≥ 68°F MODES 4 and 5 with Boron Penalty' curve. TC

Uncorrected Minimum Boron Concentration 1610 ppm TC

STANDARD: **CS –Identified that Operator the incorrect curve**.
SAT: ☐ UNSAT: ☐

Figure 4.5 Curve for Mode 4 and 5 with Boron Penalty (Top Line)is signed for but Mode 3 curve was used.

STANDARD: **(CS)** Determines Uncorrected Boron Concentration is 1910 to 1930 PPM
SAT: ☐ UNSAT: ☐

EXPECTED ACTIONS	CUES/STANDARDS ("**CS**" Indicates Critical Standard)

Continuous	02-OHP-4021-001-012	Rev. 16	Page 10 of 35
Determination of Reactor Shutdown Margin			
Attachment 1	Manual Shutdown Boron Calculation for Mode 3, 4, or 5		Pages: 5 - 17

4.7 **IF** rods are stuck out, **THEN** determine the correction for stuck out rods:

4.7.1 Using Core Burnup (Step 4.3) determine the Worth of a Single Stuck Out Rod from TDB Figure 1.3b and enter below:

4.7.2 Multiply Worth of Single Stuck Out Rod by the number of stuck out rods.

Number of stuck rods: 1

x

Worth of a Single Stuck Rod: 600 pcm

Total Stuck Out Rod Worth: = 600 pcm TR

4.8 **IF** optional Xenon correction is required, **THEN** perform either 4.8.1, 4.8.2, **OR** 4.8.3:

4.8.1 **IF** Xenon equilibrium has been reached before the Reactor trip, **THEN** use one of the following to determine Xenon reactivity for the 30th hour following the unit shutdown:

NOTE: The lower Power level curve should be used for conservatism.

- TDB 2 Figure 8.3.a, Total Xenon Reactivity Worth Following Shutdown, BOC
- TDB 2 Figure 8.3.b, Total Xenon Reactivity Worth Following Shutdown, MOC
- TDB 2 Figure 8.3.c, Total Xenon Reactivity Worth Following Shutdown, EOC

TR Xenon Correction NOT USED N/A

4.8.2 Run PPC Xenon Predict Program for the 30th hour following the unit shutdown.

Rod D-12 is stuck out at 105 steps.

STANDARD: **(CS)** Enters 1 for 1 stuck rod
SAT: ☐ UNSAT: ☐

STANDARD: **(CS)** Determines worth of stuck rod is 590 -610 pcm
SAT: ☐ UNSAT: ☐

STANDARD: **(CS)** Enters total stuck rod worth of 590 -610 pcm
SAT: ☐ UNSAT: ☐

Step 4.8 is N/A – Per briefing, Xenon Correction is NOT used.

EXPECTED ACTIONS	CUES/STANDARDS ("**CS**" Indicates Critical Standard)

Continuous	02-OHP-4021-001-012	Rev. 16	Page 11 of 35
Determination of Reactor Shutdown Margin			
Attachment 1	Manual Shutdown Boron Calculation for Mode 3, 4, or 5		Pages: 5 - 17

4.8.3 Contact Reactor Engineering for Predicted Xenon for the 30th hour following the unit shutdown. TR Xenon Correction not used N/A

4.8.4 Enter Xenon Reactivity value from either Step 4.8.1, 4.8.2, or 4.8.3 for the 30th hour following the unit shutdown:

Xenon Reactivity [N/A] pcm N/A

4.9 **IF** there are corrections for stuck rods or xenon, **THEN** calculate Total Correction for the Minimum Boron Concentration as follows:

4.9.1 Combined Reactivity for Stuck Rods and Xenon:

Add Total Stuck Rod Worth to Xenon Reactivity, include proper mathematical signs in the calculation.

Total Stuck Out Rod Worth (Step 4.7) [600] pcm

+

Xenon Reactivity (Step 4.8.4) [0] pcm

Combined Reactivity [= 600] pcm TR

STANDARD: **(CS)** Enters total stuck rod worth of 590 -610 pcm
SAT: ☐ UNSAT: ☐

STANDARD: Enters 0 for Xenon reactivity
SAT: ☐ UNSAT: ☐

STANDARD: **(CS)** Enters Combined Reactivity of 590 -610 pcm
SAT: ☐ UNSAT: ☐

EXPECTED ACTIONS	CUES/STANDARDS ("**CS**" Indicates Critical Standard)

Continuous	02-OHP-4021-001-012	Rev. 16	Page 12 of 35
Determination of Reactor Shutdown Margin			
Attachment 1	Manual Shutdown Boron Calculation for Mode 3, 4, or 5		Pages: 5 - 17

4.9.2 Boron Worth:

Obtain Boron Worth from TDB Figure 4.1.b, 4.1.c, or 4.1.d using the following parameters **AND** enter the value below.

- Core Burnup (Step 4.3)
- RCS Temperature* (Step 4.4)
- Uncorrected Minimum Boron Concentration (Step 4.6)

***IF** a TDB figure is **NOT** available for the recorded RCS temperature, **THEN** use the following guidance:

- **IF** Combined Reactivity (Step 4.9.1) is GREATER THAN 0, **THEN** the TDB Figure with the nearest HIGHER temperature shall be used.
- **IF** Combined Reactivity (Step 4.9.1) is LESS THAN 0, **THEN** the TDB figure with the nearest LOWER temperature shall be used.

Boron Worth [-10.8] pcm/ppm TR

4.9.3 Delta Boron:

Divide Combined Reactivity by Boron Worth.

Combined Reactivity (Step 4.9.1) [600] pcm

÷

Boron Worth (Step 4.9.2) [-10.8] pcm/ppm

Delta Boron [=-55.5] ppm TR

STANDARD: **(CS)** Uses figure 4.1.c since Combined Reactivity is >0 and RCS Temperature is 215°F
SAT: ☐ UNSAT: ☐

STANDARD: **CS –** Identifies that Boron Worth & Delta Boron values are Incorrect. **(Note this carries through the remainder of the calculation Step 4.9, 4.10, & 4.12)**

STANDARD: **(CS)** Uses MOC line at Boron Concentration of ~ 1920 PPM to obtain Differential Boron Worth of "-9.15 to to -9.35 pcm/ppm".
SAT: ☐ UNSAT: ☐

STANDARD: Enters Combined Reactivity of 590 -610 pcm
SAT: ☐ UNSAT: ☐

STANDARD: Enters DBW of "-9.15 to to -9.35 pcm/ppm".
SAT: ☐ UNSAT: ☐

STANDARD: **(CS)** Calculates Delta Boron of "-63.10 to – 66.67 ppm"
SAT: ☐ UNSAT: ☐

EXPECTED ACTIONS	CUES/STANDARDS ("**CS**" Indicates Critical Standard)
	STANDARD: Enters Uncorrected Boron Concentration is 1910 to 1930 ppm SAT: ☐ UNSAT: ☐
	STANDARD: Enters Delta Boron of "-63.10 to – 66.67 ppm" SAT: ☐ UNSAT: ☐
	STANDARD: **(CS)** Calculates Adjusted Boron Concentration of "-1973.1 to – 1996.67 ppm" SAT: ☐ UNSAT: ☐
	STANDARD: **(CS)** Uses figure 4.1.c since Combined Reactivity is >0 and RCS Temperature is 215°F SAT: ☐ UNSAT: ☐
	STANDARD: **(CS)** Uses MOC line at Adjusted Boron Concentration of ~ 1984.9 PPM to obtain Differential Boron Worth of "-9.1 to -9.3 pcm/ppm". SAT: ☐ UNSAT: ☐

Continuous	02-OHP-4021-001-012	Rev. 16	Page 13 of 35
Determination of Reactor Shutdown Margin			
Attachment 1	Manual Shutdown Boron Calculation for Mode 3, 4, or 5		Pages: 5 - 17

4.9.4 Adjusted Boron Concentration:

Subtract Delta Boron from Uncorrected Minimum Boron Concentration

Uncorrected Minimum Boron Concentration (Step 4.6)	1610	ppm
– Delta Boron (Step 4.9.3)	-55.5	ppm
Adjusted Boron Concentration	=1665.5	~~ppm~~ TC

4.9.5 Adjusted Boron Worth:

Obtain Boron Worth from TDB Figure 4.1.b, 4.1.c, or 4.1.d using the following parameters **AND** enter the value below.

- Core Burnup (Step 4.3)
- RCS Temperature* (Step 4.4)
- Adjusted Boron Concentration (Step 4.9.4)

***IF** a TDB figure is **NOT** available for the recorded RCS temperature, **THEN** use the following guidance:

- **IF** Combined Reactivity (Step 4.9.1) is GREATER THAN 0, **THEN** the TDB Figure with the nearest HIGHER temperature shall be used.
- **IF** Combined Reactivity (Step 4.9.1) is LESS THAN 0, **THEN** the TDB figure with the nearest LOWER temperature shall be used.

Adjusted Boron Worth -10.7 pcm/ppm TC

EXPECTED ACTIONS	CUES/STANDARDS ("**CS**" Indicates Critical Standard)

Continuous	02-OHP-4021-001-012	Rev. 16	Page 14 of 35
Determination of Reactor Shutdown Margin			
Attachment 1	Manual Shutdown Boron Calculation for Mode 3, 4, or 5		Pages: 5 - 17

4.9.6 Correction for Minimum Boron:

Divide Combined Reactivity by Adjusting Boron Worth.

Combined Reactivity (Step 4.9.1)	600	pcm
÷		
Adjusted Boron Worth (Step 4.9.5)	-10.7	pcm/ppm
Delta Boron	= -56.1	ppm TR

4.9.7 Corrected Minimum Boron Concentration:

Subtract Correction for Minimum Boron from Uncorrected Minimum Boron Concentration.

Uncorrected Minimum Boron Concentration (Step 4.6)	1610	ppm
-		
Correction for Minimum Boron (Step 4.9.6)	-56.1	ppm
Corrected Minimum Boron Concentration	= 1666.1	ppm TR

STANDARD: Enters Combined Reactivity of 590 - 610 pcm
SAT: ☐ UNSAT: ☐

STANDARD: Enters DBW of "-9.1 to -9.3 pcm/ppm"
SAT: ☐ UNSAT: ☐

STANDARD: **(CS)** Calculates Delta Boron of "-63.4 to –67.0 ppm"
SAT: ☐ UNSAT: ☐

STANDARD: Enters Uncorrected Boron Concentration is 1910 to 1930 ppm

SAT: ☐ UNSAT: ☐

STANDARD: Enters Delta Boron of "-63.4 to –67.0 ppm"
SAT: ☐ UNSAT: ☐

STANDARD: **(CS)** Calculates Adjusted Boron Concentration of 1973.4 to 1997.0 ppm
SAT: ☐ UNSAT: ☐

EXPECTED ACTIONS	CUES/STANDARDS ("**CS**" Indicates Critical Standard)

Continuous	02-OHP-4021-001-012	Rev. 16	Page 15 of 35
Determination of Reactor Shutdown Margin			
Attachment 1	Manual Shutdown Boron Calculation for Mode 3, 4, or 5		Pages: 5 - 17

4.10 Minimum RCS Boron Required:

4.10.1 **IF** there is NO correction for stuck rods or xenon to Minimum Boron Concentration calculated (Step 4.9 is N/A), **THEN** enter Uncorrected Minimum Boron Concentration (Step 4.6) value below. N/A

-OR-

4.10.2 **IF** there is a correction for stuck rods or xenon to Minimum Boron Concentration calculated (Step 4.9), **AND**

NOTE: 2200 ppm is sufficient to ensure that SHUTDOWN MARGIN is maintained with any number of rods failing to be fully inserted. [Ref. 7.2.1d]

- Corrected Minimum Boron Concentration (Step 4.9.7) is GREATER THAN 2200 ppm, **THEN** enter 2200 ppm below. N/A

-OR-

- Corrected Minimum Boron Concentration (Step 4.9.7) is LESS THAN 2200 ppm, **THEN** enter the Corrected Minimum Boron Concentration value below. TC

Minimum RCS Boron Required 1666.1 ppm TC

4.11 Record the current RCS boron concentration as determined from chemistry sampling from Data Sheet 1, RCS Boron Concentration Sample request, which was initiated in Step 2.1 **OR** the last recorded RCS boron sample result if no significant boration or dilution has occurred since the last sample time.

RCS Boron Concentration 1810 ppm

Chemistry Sample Date: TODAY Time: 30 MIN AGO TC

Step 4.10.1 is N/A – Correction for Stuck rod is required.

Step 4.10.2 is N/A – Concentration is < 2200 PPM

STANDARD: **(CS)** Enters Required Boron Concentration of 1973.4 to 1997.0 ppm
SAT: ☐ UNSAT: ☐
NOTE: If Candidate determines Minimum Boron Concentration is NOT MET and Emergency Boration is required, the JPM may be terminated.

STANDARD: Enters Current RCS Boron Concentration of 1810 PPM
SAT: ☐ UNSAT: ☐

STANDARD: Enters sample time of Today's date and 30 minutes ago
SAT: ☐ UNSAT: ☐

EXPECTED ACTIONS	CUES/STANDARDS ("**CS**" Indicates Critical Standard)

Continuous	02-OHP-4021-001-012	Rev. 16	Page 16 of 35
Determination of Reactor Shutdown Margin			
Attachment 1	Manual Shutdown Boron Calculation for Mode 3, 4, or 5		Pages: 5 - 17

4.12 Boration Requirement:

Subtract the RCS Boron Concentration from the Minimum RCS Boron Required:

Minimum RCS Boron Required (Step 4.5 **OR** Step 4.10) 1666.1 ppm

\- RCS Boron Concentration (Step 4.11) 1810 ppm

Result =-143.9 ppm TR

Is Boration Required? (✓) ❑ Yes ☒ No TR

- **IF** the result is zero or negative, **THEN** check "NO" and boration is **NOT** required. TR

-OR-

- **IF** the result is positive, **THEN** check "Yes" **AND**:

  a. **IF** TS required SHUTDOWN MARGIN requirements are **NOT** met for current plant conditions, **THEN** emergency borate per 02-OHP-4021-005-007, Operation of Emergency Boration Flow Paths, to the Minimum RCS Boron Required concentration listed in Step 4.12. N/A

  -OR-

  b. **IF** SHUTDOWN MARGIN requirements are met for current plant conditions, **THEN** borate as directed by the Unit Supervisor (US). N/A

STANDARD: **(CS)** Enters Required Boron Concentration of 1973.4 to 1997.0 ppm
SAT: ☐ UNSAT: ☐

STANDARD: Enters Current RCS Boron Concentration of 1810 PPM
SAT: ☐ UNSAT: ☐

STANDARD: Determines Difference is 163.4 to 187.0 ppm
SAT: ☐ UNSAT: ☐

STANDARD: **(CS)** Informs US that Shutdown Margin is NOT met and that Emergency Boration is Required.
SAT: ☐ UNSAT: ☐

JPM TERMINATION: When operator Determines that Emergency Boration is required since the Shutdown Margin is NOT met, then **"JPM is Complete."**

EXPECTED ACTIONS	CUES/STANDARDS ("**CS**" Indicates Critical Standard)
	No actions required.

Continuous	02-OHP-4021-001-012	Rev. 16	Page 17 of 35
Determination of Reactor Shutdown Margin			
Attachment 1	Manual Shutdown Boron Calculation for Mode 3, 4, or 5		Pages: 5 - 17

Comments:

_____
_____
_____
_____

Calculated By: _____ Time: _____ Date: ___/___/___

Calculation Independently Verified By: _____ Time: _____ Date: ___/___/___

Reviewed By: _____ Date: ___/___/___
US/SM/WCC-SRO

Task Briefing

You are the Unit Supervisor on Unit 2. Per your direction, the extra Control Room Operator completed Attachment 2 of 02-OHP-4021-001-012, Determination of Reactor Shutdown Margin.

The reactor tripped from 100% steady state operations 32 hours ago.

The RO calculated the required Shutdown Boron Concentration for the CURRENT RCS conditions without use of the optional Xenon Correction.

- NERDS is NOT available.
- RCS Temperature is currently 215°F.
- PPC point U0035 indicates 8500 MWD/MTU
- RCS boron concentration is 1810 ppm per a chemistry sample taken 30 minutes ago.
- All Rods are fully inserted except Control Bank D Rod D-12 which indicates 105 steps.

Perform a complete review of the completed Attachment 1, noting all errors.

NOTE
Simulator Indications are NOT applicable to this JPM.

AMERICAN ELECTRIC POWER

COOK NUCLEAR PLANT TRAINING CENTER

Bridgman, Michigan

OPERATIONS JPM

TRAINING PROGRAM TITLE	INITIAL LICENSE TRAINING	**TIME:**	15 MINUTES
NUMBER AND TITLE:	NRC2010-A2 Perform Unit 2 LTOP Verification	**REVISION:**	0
SCOPE OF REVISION	**Initial Issue.** **From: Audit07-A1b-R**		

			DATE:
PREPARED BY: (Exam Writer)	Name:	_____	
	Signature:	_____	_____
APPROVED BY: (Facility Reviewer)	Name:	_____	
	Signature:	_____	_____

REFERENCES/NRC KA/TASKS

Procedure:	2-OHP-4030-214-030, R14	Daily and Shiftly Surveillance Checks
K/A Number:	2.2.37	Ability to determine operability and/or availability of safety related equipment. (CFR: 41.7 / 43.5 / 45.12)
K/A Imp.:	RO: 3.6 SRO: 4.6	
Task Number:	STP0390201	Perform Shiftly Surveillance checks for MODE 5 & 6

TRAINING AIDS/TOOLS/EQUIPMENT

None

HANDOUTS

Task Briefing
Unit 2 TS 3.4.12
2-OHP-4030-214-030, R14, Daily And Shiftly Surveillance Checks:

- Data Sheet 20,LTOP Verification
- Data Sheet 20A, LTOP Verification LCO 3.4.12.A
- Data Sheet 20B, LTOP Verification LCO 3.4.12.B

ATTACHMENTS

None

EVALUATION SETTINGS

Classroom.

EVALUATION METHOD:	PERFORM: ☒	SIMULATE: ☐

SIMULATOR/LAB SETUP

None.

EVALUATOR INSTRUCTIONS

1. Ensure simulator setup is complete
2. Brief the operator (May be performed by giving out Task Briefing Sheet)
3. Announce start of the JPM
4. Perform evolution
5. At completion of evolution, announce the JPM is complete.
6. Document evaluation performance.

TASK BRIEFING

The US directs you to determine whether the Unit 2 LTOP Requirements are met per 02-OHP-4030-214-030, Daily and Shiftly Surveillance Checks, Data Sheet 20
Equipment availability, as shown below and on the attached Work Management (Open Items) Listing:

Unit 2 Equipment Status

COMPONENT	NAME	STATUS
2-NMO-152	PORV Block Valve	Open & Energized
2-NMO-153	PORV Block Valve	Open & Energized
2-NRV-152 Control Selector	Cold Over-Pressure Block for 2-NRV-152	Cold Over Press
2-NRV-153 Control Selector	Cold Over-Pressure Block for 2-NRV-153	Cold Over Press
2-IMO-128	Return from Hot Leg 2	Open & Energized
2-ICM-129	Return from Hot Leg 2	Open & Energized
Annunciator Panel 208 Drop 27	2-NRV-152 EMER AIR TANK PRESSURE LOW	NOT Lit
Annunciator Panel 208 Drop 28	2-NRV-153 EMER AIR TANK PRESSURE LOW	Lit
2-PP-50E	East Centrifugal Charging Pump	PTL (Racked Out)
2-PP-50W	West Centrifugal Charging Pump	Running (Racked In)
Loop 2 WR Cold Leg Temp	RCS Lowest Cold Leg Temperature	185° F
RCS WR Pressure	RCS Highest Reading Pressure	230 psig

2-NPS-121		
2-PP-26N	North Safety Injection Pump	PTL (Racked Out)
2-PP-26S	South Safety Injection Pump	PTL (Racked Out)
2-NTA-251	Pressurizer Liquid Temp	400° F
2-IMO-110, 120, 130, 140	SI Accumulator Isolation Valves	Closed & De-Energized

NOTE
Simulator Indications are NOT applicable to this JPM

GENERAL STANDARDS/PRECAUTIONS

When directed by the Unit Supervisor, determine if the LTOP Requirements for Unit 2 are met per 02-OHP-4030-214-030, Daily and Shiftly Surveillance Checks, Data Sheet 20.

EXPECTED ACTIONS	CUES/STANDARDS ("**CS**" Indicates Critical Standard)

Continuous	2-OHP-4030-214-030	Rev. 14	Page 66 of 85
Daily And Shiftly Surveillance Checks			
Data Sheet 20	LTOP Verification		Pages: 66 - 68

1 PURPOSE AND SCOPE

1.1 Provide instructions for performing LTOP verification.

2 DETAILS

2.1 Complete one of the following flowcharts:

- Data Sheet 20A, LTOP Verification TS 3.4.12.A
- Data Sheet 20B, LTOP Verification TS 3.4.12.B

NOTE: When responding to OPERABILITY questions on the following flowchart:

- An LTOP PORV, (2-NRV-152 or 2-NRV-153), is considered OPERABLE if all of the following exist:
  - It has passed the required stroke time testing.
  - Backup and normal air supplies are available (and reading within limits).
  - Its setpoint is within Tech Spec requirements.
  - Its controls are in the Cold Overpressure Mode.
- The RHR Suction Safety is considered OPERABLE if both of the following exist:
  - Its relief setpoint is set in accordance with Tech Spec requirements.
  - The suction path isolation valves are full open.

3 ACCEPTANCE CRITERIA (✓ applicable conditions, mark others N/A)

❑ Accumulators are isolated per SR 3.4.12.3. _____

❑ RHR suction isolation valves are open for the required suction relief valve per SR 3.4.12.4. _____

❑ PORV block valve is open for each required PORV per SR 3.4.12.6 _____

❑ Data Sheet 20A is met to satisfy Tech Spec 3.4.12 _____

❑ Data Sheet 20B is met to satisfy Tech Spec 3.4.12 _____

General Instructions:

Provide a copy of 2-OHP-4030-214-030, Daily and Shiftly Surveillance Checks:

- Data Sheet 20
- Data Sheet 20A
- Data Sheet 20B

STANDARD: **(CS)** Operator determines based on Task Briefing information that Data Sheet 20A, LTOP Verification LCO 3.4.12.A is applicable.
SAT: ☐ UNSAT: ☐

Instructor Note: Data Sheet 20B is for LCO 3.4.12.B when Both CCPs are available.

Instructor Note: Operator will complete Data Sheet 20A, per following page prior to completing the remainder of Data Sheet 20.

EXPECTED ACTIONS	CUES/STANDARDS ("**CS**" Indicates Critical Standard)

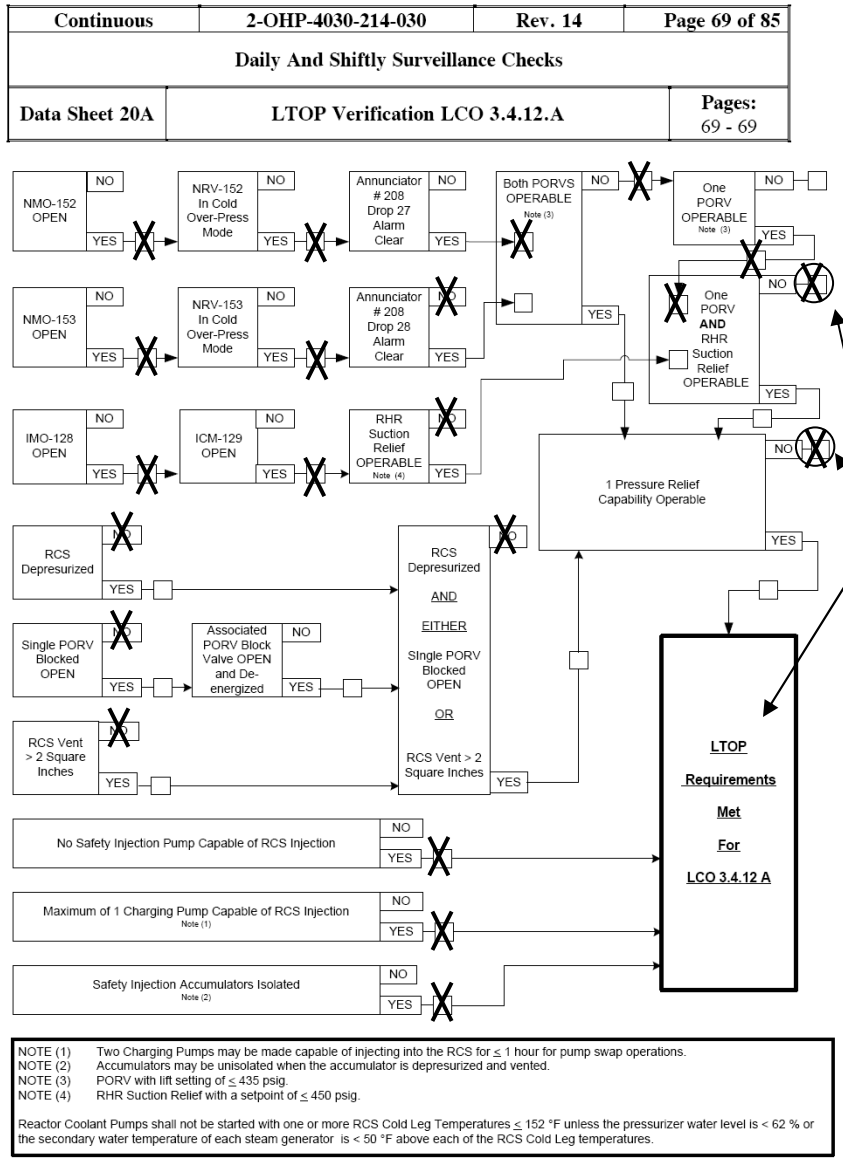

STANDARD: **(CS)** Student Marks page as shown [X's] (one PORV is operable, RHR Suction Relief In-Operable)

CUE: IF asked, **THEN** provide the following information for 2-NRV-153 and 2-NRV-152:
Both PZR PORVs passed their required stroke time test. Normal and Backup air supplies are available. Setpoints are within the functional testing criteria.

STANDARD: **(CS)** Determines that LTOP Requirements are NOT Met.

STANDARD: Informs Unit Supervisor/Shift Manager That requirements are NOT Met.

EXPECTED ACTIONS	CUES/STANDARDS ("**CS**" Indicates Critical Standard)

Continuous	2-OHP-4030-214-030	Rev. 14	Page 66 of 85
Daily And Shiftly Surveillance Checks			
Data Sheet 20	LTOP Verification		Pages: 66 - 68

1 PURPOSE AND SCOPE

1.1 Provide instructions for performing LTOP verification.

2 DETAILS

2.1 Complete one of the following flowcharts:

- Data Sheet 20A, LTOP Verification TS 3.4.12.A
- Data Sheet 20B, LTOP Verification TS 3.4.12.B

NOTE: When responding to OPERABILITY questions on the following flowchart:

- An LTOP PORV, (2-NRV-152 or 2-NRV-153), is considered OPERABLE if all of the following exist:
  - It has passed the required stroke time testing.
  - Backup and normal air supplies are available (and reading within limits).
  - Its setpoint is within Tech Spec requirements.
  - Its controls are in the Cold Overpressure Mode.
- The RHR Suction Safety is considered OPERABLE if both of the following exist:
  - Its relief setpoint is set in accordance with Tech Spec requirements.
  - The suction path isolation valves are full open.

3 ACCEPTANCE CRITERIA (✓ applicable conditions, mark others N/A)

- ❑ Accumulators are isolated per SR 3.4.12.3. _____
- ❑ RHR suction isolation valves are open for the required suction relief valve per SR 3.4.12.4. _____
- ❑ PORV block valve is open for each required PORV per SR 3.4.12.6 _____
- ❑ Data Sheet 20A is met to satisfy Tech Spec 3.4.12 _____
- ❑ Data Sheet 20B is met to satisfy Tech Spec 3.4.12 _____

STANDARD: Operator completes Section 3 based in Task Brief information and Data Sheet 20A:
SAT: ☐ UNSAT: ☐

- Accumulators Isolated (Yes)
- RHR Suctions Isolations Open (Yes)
- PORV Block Valves Open (Yes)
- Data Sheet 20A is Met (No)
- Data Sheet 20B is met (N/A)

EXPECTED ACTIONS	CUES/STANDARDS ("**CS**" Indicates Critical Standard)

Continuous	2-OHP-4030-214-030	Rev. 14	Page 67 of 85
Daily And Shiftly Surveillance Checks			
Data Sheet 20	LTOP Verification		Pages: 66 - 68

4 FINAL CONDITIONS

4.1 Test Performance:

Testing has been completed. All problems reported to Department Supervision.
WO/PMRQ_____

Test Start Time: _____ Start Date: _____

Test Completed By: _____ Time: _____ Date: ___/___/___
Test Performer or Lead Worker

Comments:_____

4.2 Department Review:

Reason for test: ☐ Scheduled surveillance ☐ PMT ☐ IST CM WO _____ ☐ Other _____

❑ Testing is complete and acceptance criteria has been met for all components tested.

❑ Testing (partial) is complete and acceptance criteria has been met for all components except for the following components (include applicable ESAT numbers):
_____

❑ Testing is complete and acceptance criteria has NOT been met. Reason test not acceptable (include applicable ESAT number): _____
_____

Reviewed By: _____ Time: _____ Date: ___/___/___
Licensed Operator or STA

STANDARD: Operator completes Section 4.1.
SAT: ☐ UNSAT: ☐

CUE: When reported, Acknowledge Test Results.

STANDARD: **(CS)** Operator completes and signs Step 4.2, including Reason for Test (Surveillance) and checking "Test is complete and acceptance criteria bas NOT been met…," with appropriate reason.
SAT: ☐ UNSAT: ☐

JPM TERMINATION: When operator reports Acceptance Criteria is NOT met in section 4.2, then **"JPM is Complete."**

Task Briefing

The US directs you to determine whether the Unit 2 LTOP Requirements are met per 02-OHP-4030-214-030, Daily and Shiftly Surveillance Checks, Data Sheet 20 Equipment availability, as shown below and on the attached Work Management (Open Items) Listing:

Unit 2 Equipment Status		
COMPONENT	NAME	STATUS
2-NMO-152	PORV Block Valve	Open & Energized
2-NMO-153	PORV Block Valve	Open & Energized
2-NRV-152 Control Selector	Cold Over-Pressure Block for 2-NRV-152	Cold Over Press
2-NRV-153 Control Selector	Cold Over-Pressure Block for 2-NRV-153	Cold Over Press
2-IMO-128	Return from Hot Leg 2	Open & Energized
2-ICM-129	Return from Hot Leg 2	Open & Energized
Annunciator Panel 208 Drop 27	2-NRV-152 EMER AIR TANK PRESSURE LOW	NOT Lit
Annunciator Panel 208 Drop 28	2-NRV-153 EMER AIR TANK PRESSURE LOW	Lit
2-PP-50E	East Centrifugal Charging Pump	PTL (Racked Out)
2-PP-50W	West Centrifugal Charging Pump	Running (Racked In)
Loop 2 WR Cold Leg Temp	RCS Lowest Cold Leg Temperature	185° F
RCS WR Pressure 2-NPS-121	RCS Highest Reading Pressure	230 psig
2-PP-26N	North Safety Injection Pump	PTL (Racked Out)
2-PP-26S	South Safety Injection Pump	PTL (Racked Out)
2-NTA-251	Pressurizer Liquid Temp	400° F
2-IMO-110, 120, 130, 140	SI Accumulator Isolation Valves	Closed & De-Energized
NOTE Simulator Indications are NOT applicable to this JPM		

AMERICAN ELECTRIC POWER

COOK NUCLEAR PLANT TRAINING CENTER

Bridgman, Michigan

OPERATIONS JPM

TRAINING PROGRAM TITLE	INITIAL LICENSE TRAINING	**TIME:**	15 MINUTES
NUMBER AND TITLE:	NRC2010-A3 Perform Monthly Rad Liquid And Gaseous Monitor Source Checks	**REVISION:**	0
SCOPE OF REVISION	**Initial Issue.** **From: Audit06-A1a**		

			DATE:
PREPARED BY: (Exam Writer)	Name:	_____	
	Signature:	_____	_____
APPROVED BY: (Facility Reviewer)	Name:	_____	
	Signature:	_____	_____

REFERENCES/NRC KA/TASKS

Procedure:	1-OHP-4030-114-030, R18	Daily And Shiftly Surveillance Checks
K/A Number:	2.3.5	Ability to use radiation monitoring systems, such as fixed radiation monitors and alarms, portable survey instruments, personnel monitoring equipment, etc. (CFR: 41.11 / 41.12 / 43.4 / 45.9)
	SYS 073 A4.03	Ability to manually operate and/or monitor in the control room: (CFR: 41.7 / 45.5 to 45.8) *Check source for operability demonstration*
K/A Imp.:	RO: 2.9 SRO: 2.9 4.3 4.0	
Task Number:	0130310201	Perform monthly source checks on Westinghouse radiation monitors.

TRAINING AIDS/TOOLS/EQUIPMENT

None

HANDOUTS

Task Briefing
1-OHP-4030-114-030, R18, Daily And Shiftly Surveillance Checks. Data Sheet 12, Monthly Rad Liquid And Gaseous Monitor Source Checks

ATTACHMENTS

None

EVALUATION SETTINGS

Classroom/Simulator

EVALUATION METHOD:	PERFORM: ☒	SIMULATE: ☐

SIMULATOR/LAB SETUP

Unit 1 SG Blowdown is removed from service.

EVALUATOR INSTRUCTIONS

1. Ensure simulator setup is complete
2. Brief the operator (May be performed by giving out Task Briefing Sheet)
3. Announce start of the JPM
4. Perform evolution
5. At completion of evolution, announce the JPM is complete.
6. Document evaluation performance.

TASK BRIEFING

You are the RO from Unit 1.

The Unit Supervisor has requested that you perform the monthly radiation monitor source checks in accordance with 1-OHP-4030-114-030, Daily And Shiftly Surveillance Checks,. Data Sheet 12, for scheduled surveillance.

Unit 1 SG Blowdown has been removed from service.

GENERAL STANDARDS/PRECAUTIONS

Perform Monthly Rad Liquid And Gaseous Monitor Source Checks.

EXPECTED ACTIONS	CUES/STANDARDS ("**CS**" Indicates Critical Standard)

Continuous	1-OHP-4030-114-030	Rev. 18	Page 42 of 94
Daily And Shiftly Surveillance Checks			
Data Sheet 12	Monthly Rad Liquid And Gaseous Monitor Source Checks		Pages: 42 - 44

1 PURPOSE AND SCOPE

1.1 To provide directions for recording the monthly radiological source checks in all modes.

2 DETAILS INIT

CAUTION: SOURCE CHECK of 1-R-19 and 1-R-24 may cause Steam Generator Blowdown to isolate.

2.1 **IF** desired, **THEN** remove Steam Generator Blowdown prior to source checking 1-R-19 and 1-R-24. _____

2.2 Source check the following:

NOTE: The following alarms may be received when performing source checks on 1-R-20 and 1-R-28:

Annunciator #138, Drop 16, R20 EAST ESW HEADER
Annunciator #138, Drop 22, R28 WEST ESW HEADER
Annunciator #123, Drop 46, RMS RAD LEVEL HI OR SYSTEM ABN

MONITOR		Initials	Reference Criteria
East ESW	1-R-20		PMP-6010-OSD-001 SOURCE CHECK
West ESW	1-R-28		
Plant Vent Radiogas	1-VRS-1505		

General Source Check Instructions: Westinghouse Rad Monitor

1) Switch to Source Check
2) Observe upscale reading
3) Reset
4) Place switch in Operate

General Source Check Instructions: Eberline Rad Monitor

1) Choose "Start Check Source"
2) Observe upscale reading
3) Observe monitor back to Normal
4) Optional review of Source Check Report

STANDARD: Operator verifies SG Blowdown has been removed from service (Or N/As step if desired).
SAT: ☐ UNSAT: ☐

STANDARD: **(CS)** Operator performs successful source check of 1-R-20 on Westinghouse Rad Monitor Drawer.
SAT: ☐ UNSAT: ☐

STANDARD: **(CS)** Operator performs successful source check of 1-R-28 on Westinghouse Rad Monitor Drawer.
SAT: ☐ UNSAT: ☐

STANDARD: **(CS)** STANDARD: **(CS)** Operator performs successful source check of 1-VRS-1505 on the Eberline Rad Monitor Terminal.
SAT: ☐ UNSAT: ☐

EXPECTED ACTIONS	CUES/STANDARDS ("**CS**" Indicates Critical Standard)

Continuous	1-OHP-4030-114-030	Rev. 18	Page 43 of 94
Daily And Shiftly Surveillance Checks			
Data Sheet 12	Monthly Rad Liquid And Gaseous Monitor Source Checks		Pages: 42 - 44

NOTE:
- A 1-R-19 or 1-R-24 High Alarm received while performing source checks should be left standing long enough to verify blowdown isolation occurs.
- The following alarms may be received when performing source checks on 1-R-19 and 1-R-24:
  Annunciator #138, Drop 15, R19 SG BLOWDOWN SAMPLING
  Annunciator #138, Drop 19, R24 SG BLOWDOWN TREATMENT
  Annunciator #123, Drop 46, RMS RAD LEVEL HI OR SYSTEM ABN

2.3 **IF** in service, **THEN** source check the following:

MONITOR		Initials	Reference Criteria
Steam Generator Blowdown	1-R-19		PMP-6010-OSD-001 SOURCE CHECK
Steam Generator Blowdown Treatment	1-R-24		
Steam Generator Blowdown	1-DRS-3101		
Steam Generator Blowdown Treatment	1-DRS-3201		

3 FINAL CONDITIONS

3.1 Test Performance:

Testing has been completed. All problems reported to Department Supervision.
WO/PMRQ_____

Test Start Time: _____ Start Date: _____

Test Completed By: _____ Time: _____ Date: ___/___/___
Test Performer or Lead Worker

Comments:_____

STANDARD: **(CS)** Operator performs successful source check of 1-R-19 on Westinghouse Rad Monitor Drawer.
SAT: ☐ UNSAT: ☐

STANDARD: **(CS)** Operator performs successful source check of 1-R-24 on Westinghouse Rad Monitor Drawer.
SAT: ☐ UNSAT: ☐

STANDARD: **(CS)** Operator performs successful source check of 1-DRS-3101 on the Eberline Rad Monitor Terminal.
SAT: ☐ UNSAT: ☐

STANDARD: **(CS)** Operator performs successful source check of 1-DRS-3201 on the Eberline Rad Monitor Terminal.
SAT: ☐ UNSAT: ☐

STANDARD: Operator completes step 3.1 included: WO/PMQR (N/A), Start/Stop Time, Test Completed by section, Any Comments.
SAT: ☐ UNSAT: ☐

JPM TERMINATION: When Data Sheet 12 has been signed at step 3.2, the **"JPM is Complete."**

Task Briefing

You are the RO from Unit 1.

The Unit Supervisor has requested that you perform the monthly radiation monitor source checks in accordance with 1-OHP-4030-114-030, Daily And Shiftly Surveillance Checks, Data Sheet 12, for scheduled surveillance.

Unit 1 SG Blowdown has been removed from service.

AMERICAN ELECTRIC POWER

COOK NUCLEAR PLANT TRAINING CENTER

Bridgman, Michigan

OPERATIONS JPM

TRAINING PROGRAM TITLE	INITIAL LICENSE TRAINING	**TIME:**	25 MINUTES
NUMBER AND TITLE:	NRC2010-A4 Prepare Prompt NRC Notification Worksheet	**REVISION:**	0
SCOPE OF REVISION	**Initial Issue.** **From: N06-SRO-e**		

			DATE:
PREPARED BY: (Exam Writer)	Name:	_____	
	Signature:	_____	_____
APPROVED BY: (Facility Reviewer)	Name:	_____	
	Signature:	_____	_____

REFERENCES/NRC KA/TASKS

Procedure:	PMP-7030-001-001, R11	Prompt NRC Notification
	10 CFR 50.72	Notification of NRC
	NUREG-1022	Recent Reporting Guidelines
K/A Number:	2.4.30	Knowledge of events related to system operation/status that must be reported to internal organizations or external agencies, such as the State, the NRC, or the transmission system operator. | (CFR: 41.10 / 43.5 / 45.11)
K/A Imp.:	RO: 2.7 SRO: 4.1	
Task Number:	ADM1250304	Make a prompt NRC notification

TRAINING AIDS/TOOLS/EQUIPMENT

None

HANDOUTS

Task Briefing
Copy of procedure PMP-7030-001-001

ATTACHMENTS

None

EVALUATION SETTINGS

Classroom

EVALUATION METHOD:	PERFORM: ☒	SIMULATE: ☐

SIMULATOR/LAB SETUP

None

EVALUATOR INSTRUCTIONS

1. Brief the operator (May be performed by giving out Task Briefing Sheet)
2. Announce start of the JPM
3. Perform evolution
4. At completion of evolution, announce the JPM is complete.
5. Document evaluation performance.

TASK BRIEFING

You are the extra SRO.

The Shift Manager directs you to determine the NRC notification requirements and prepare an event notification worksheet (Data Sheet 1) for prompt NRC NOTIFICATION in accordance with PMP-7030-001-001.

The following plant conditions exist as noted.

- Current time is 1400
- DC Cook Unit 1 was in MODE 3 at Operating Temperature and Pressure. The Shutdown and Control Rods were fully inserted with the Reactor Trip Breakers Open.
- At 1325 today, Steam Generator #12 Safety Valve has opened and did not reseat (remains partially open).
- The Unit 1 operation crew manually initiated Safety Injection due to uncontrolled lowering of RCS temperature / pressure, and Steam Generator #12 pressure continues to lower.
- The Unit 1 operating crew has completed E-0, Reactor Trip and Safety Injection, E-2 Faulted Steam Generator Isolation, and is currently in ES-1.1, SI Termination. SI flow has been terminated per ES-1.1.
- Present RCS conditions: RCS is stable in Mode 3; level in SG #12 is at 5% WR and slowly lowering; all other SGs are being maintained between 26% and 50% NR on auxiliary feedwater; and there is no detectable radiation release in progress.
- All other plant systems responded normally to the event.
- The SM has determined that NO Emergency Classification is required per PMP-2080-EPP-101.

GENERAL STANDARDS/PRECAUTIONS

Determine NRC notification requirements and prepare an event notification worksheet.

EXPECTED ACTIONS	CUES/STANDARDS ("**CS**" Indicates Critical Standard)

Information	PMP-7030-001-001	Rev. 11	Page 5 of 32
PROMPT NRC NOTIFICATION			

3 DETAILS

3.1 **Reporting – Notification**

3.1.1 The purpose of this section is to outline the reportability process to be followed when issues arise as it applies to the following reports:

- One (1) hour
- Four (4) hour
- Eight (8) hour
- Twenty-four (24) hour
- Two (2) day

a. It is a requirement of 10 CFR 50.72 that the above reports be made within the required time frames.

b. If an event occurs or an engineering issue is brought to light that may be reportable based on 10 CFR 50.72 reporting criteria, initiate the reportability process by promptly contacting the Shift Manager. The following activities shall be performed:

1. The SM, in consultation with the Shift Technical Advisor, Operations and Regulatory Affairs Duty Personnel, will determine if assistance from other plant organizations is required to determine reportability.

2. Notify Regulatory Affairs of event or issue.

c. The individuals from step 3.1.1b.1 reviewing the event/issue shall make a determination of reportability.

d. Use the Figure 1, Reportability Flowchart, to aid in determining the reportability of the event or issue. Use the text in the procedure as an additional source of information and clarification. In addition, NUREG-1022, Revision 2, Event Reporting Guidelines 10 CFR 50.72 and 50.73, contains additional information including examples that may clarify reportability.

e. Reports not specifically identified in 10 CFR 50.72 are found in their respective parts of the CFR.

STANDARD: **(CS)** Determine from conditions stated that the event is reportable per guidance provided in PMP 7030-001-001
SAT: ☐ UNSAT: ☐

STANDARD: Refers to FIGURE 1 to identify reportability and the reference text section for information and clarification
SAT: ☐ UNSAT: ☐

Instructor Note: Step 3.1.1.f (Filling out Data Sheet 1) will be completed following the Reportability Determination using Figure 1.

EXPECTED ACTIONS	CUES/STANDARDS ("**CS**" Indicates Critical Standard)

Information	PMP-7030-001-001	Rev. 11	Page 27 of 32
PROMPT NRC NOTIFICATION			
Figure 1	Reportability Flowchart		Pages: 27 - 32

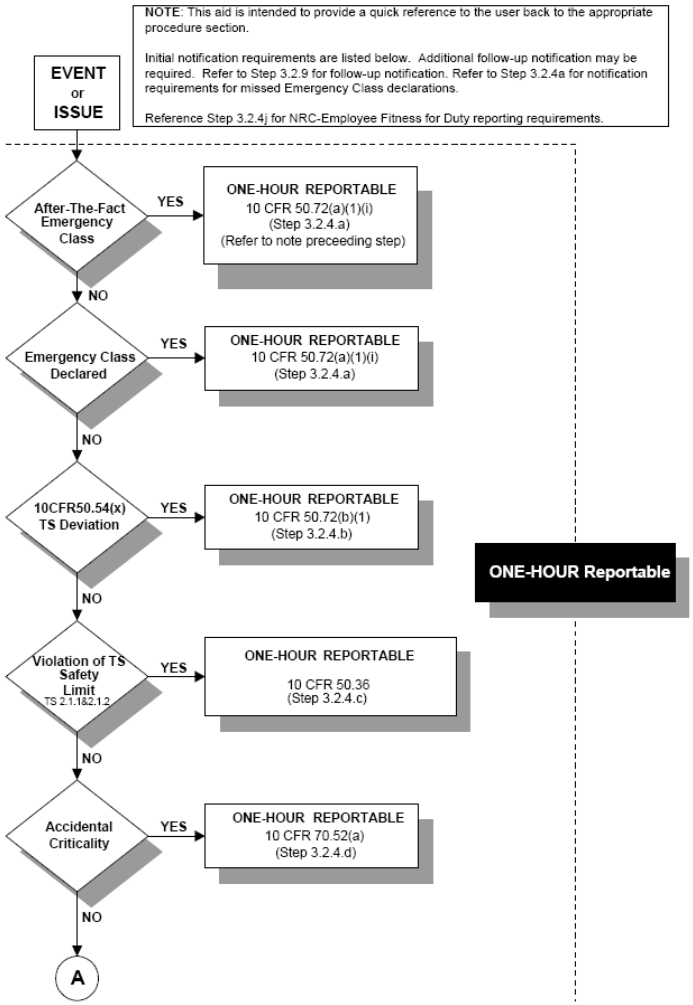

NO CRITERIA ON THIS PAGE APPLY TO THE STATED PLANT CONDITIONS.

EXPECTED ACTIONS	CUES/STANDARDS ("**CS**" Indicates Critical Standard)
	NO CRITERIA ON THIS PAGE APPLY TO THE STATED PLANT CONDITIONS.

Information	PMP-7030-001-001	Rev. 11	Page 28 of 32
PROMPT NRC NOTIFICATION			
Figure 1	Reportability Flowchart		Pages: 27 - 32

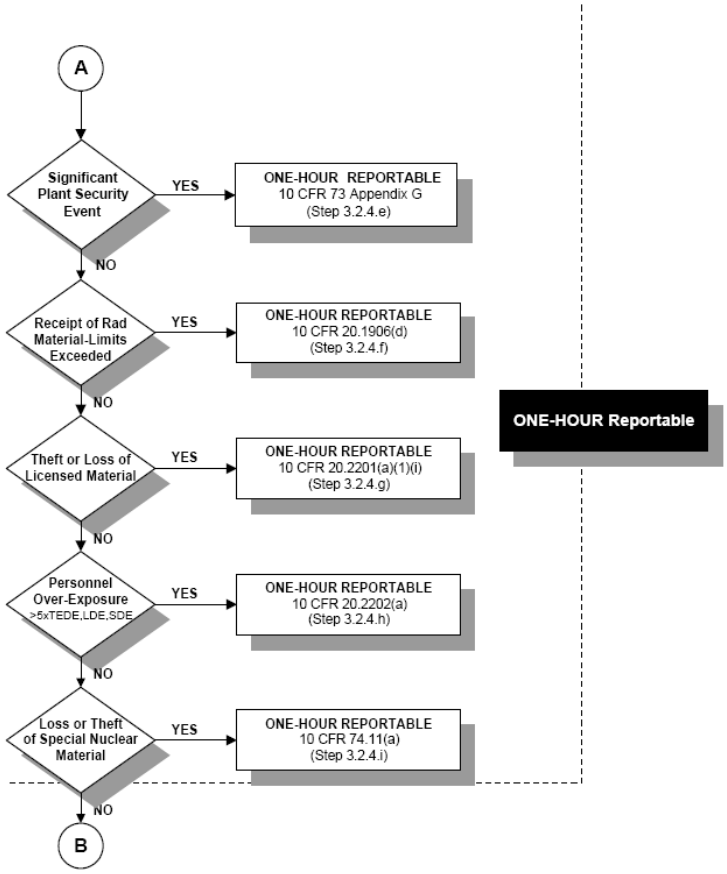

EXPECTED ACTIONS	CUES/STANDARDS ("**CS**" Indicates Critical Standard)

Information	PMP-7030-001-001	Rev. 11	Page 29 of 32
PROMPT NRC NOTIFICATION			
Figure 1	Reportability Flowchart		Pages: 27 - 32

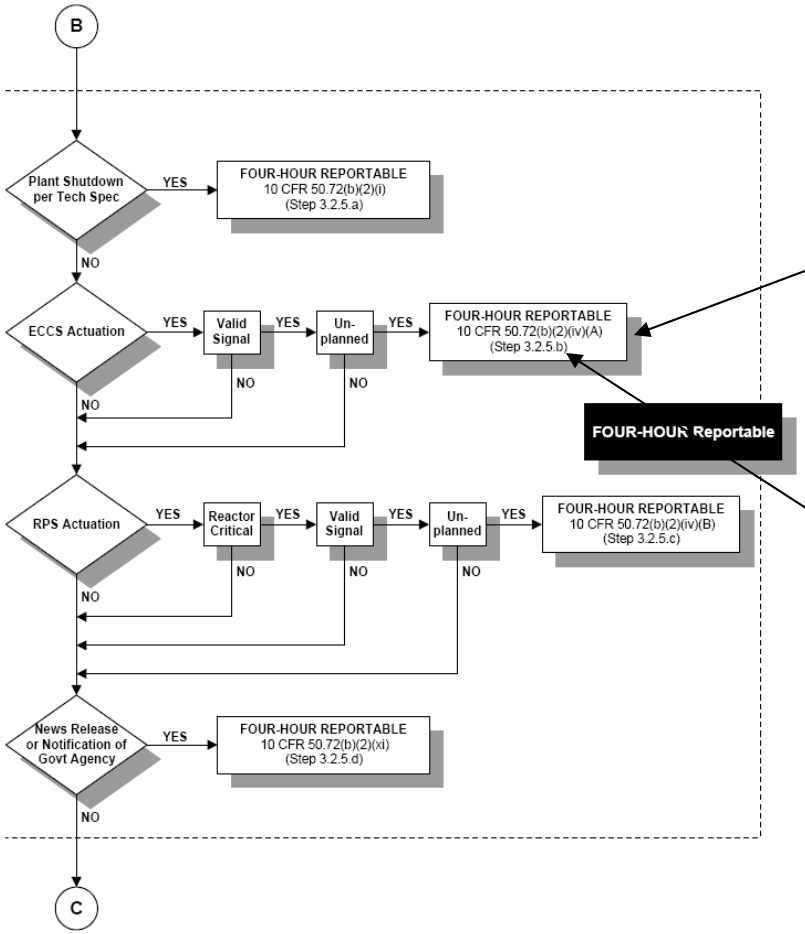

STANDARD: **(CS)** Identifies that an unplanned ECCS actuation from valid signal (Manual SI) requires a report within 4 hours.
SAT: ☐ UNSAT: ☐

STANDARD: Observes note of the sections in the procedure text that provide information or clarification of this flow chart determination.
SAT: ☐ UNSAT: ☐

EXPECTED ACTIONS	CUES/STANDARDS ("**CS**" Indicates Critical Standard)
Information | **PMP-7030-001-001** | **Rev. 11** | **Page 11 of 32** **PROMPT NRC NOTIFICATION**	
2. The release of radioactive material, inside or outside of a restricted area, so that, had an individual been present for 24 hours, the individual could have received an intake five times the annual limit on intake.	
h. The discovery of any loss or theft or other unlawful diversion of special nuclear material or any incident in which an attempt has been made to commit a theft or unlawful diversion of special nuclear material. [10 CFR 74.11(a)]	
i. Fitness for Duty. See Attachment 1, Section 3.3 for additional information.	
1. The regulations found in 10 CFR 26 do not apply to NRC employees, law enforcement personnel, or offsite emergency fire and medical response personnel while responding onsite. [10 CFR 26.2(b)]	**NO STEPS ON THIS PAGE APPLY TO THE STATED PLANT CONDITIONS.**
2. If a licensee has a reasonable belief that an NRC employee may be under the influence of any substance, or otherwise unfit for duty, the licensee may not deny access, but shall escort the individual. In any instance of this occurrence, the appropriate Regional Administrator must be notified immediately by telephone. During other than normal working hours, the NRC Operations Center must be notified. Concurrently, notify the Senior Resident Inspector. [10 CFR 26.27(d)]	
3.2.5 **Four Hour Reports** Notify the NRC as soon as practical and in all cases, within **four hours**, of the discovery of any event similar to the below listed events and identify that event as being reported as a Four Hour Report.	
NOTE: This includes initiation of any shutdown due to expected inability to restore equipment prior to exceeding the LCO action time. This does not include mode changes required by TS if initiated after the plant is already in a shutdown condition. [NUREG 1022, Sect. 3.2.1]	
a. The initiation of any nuclear plant shutdown required by the plant's Technical Specifications. [10 CFR 50.72(b)(2)(i)]	

EXPECTED ACTIONS	CUES/STANDARDS ("**CS**" Indicates Critical Standard)

Information	PMP-7030-001-001	Rev. 11	Page 12 of 32
PROMPT NRC NOTIFICATION			

NOTE: Any valid unplanned automatic or manual ECCS signal is reportable. [NUREG 1022, Sect. 3.2.6]

b. Any event that results or should have resulted in Emergency Core Cooling System (ECCS) discharge into the reactor coolant system as a result of a valid signal except when the actuation results from and is part of a pre-planned sequence during testing or reactor operation. [10 CFR 50.72(b)(2)(iv)(A)]

STANDARD: **(CS)** Refers to sections in procedure text for information of clarification of flow chart results

SAT: ☐ UNSAT: ☐

NOTE: Any valid unplanned automatic or manual critical scram is reportable. If an operator were to manually scram the reactor in anticipation of receiving an automatic reactor scram, this would be reportable. [NUREG 1022, Sect. 3.2.6]

c. Any event or condition that results in actuation of the Reactor Protection System (RPS) when the reactor is critical except when the actuation results from and is part of a pre-planned sequence during testing or reactor operation. [10 CFR 50.72(b)(2)(iv)(B)]

d. Any event or situation, related to the health and safety of the public or onsite personnel, or protection of the environment, for which a news release is planned or notification to other government agencies has been or will be made. Such an event may include an onsite fatality or inadvertent release of radioactively contaminated materials. Some minor environmental reports to other government agencies do not need follow up NRC reporting. [10 CFR 50.72 (b)(2)(xi), NUREG 1022, Sect. 3.2.12]

Instructor Note: Once determination is made using Figure 1, return to Step 3.1.1.f to fill out Data Sheet 1.

3.2.6 **Eight Hour Reports**

Notify the NRC as soon as practical and in all cases, within **eight hours**, of the discovery of any event similar to the below listed events and identify that event as being reported as an Eight Hour Report.

a. Any event or condition that results in: [10 CFR 50.72(b)(3)(ii)]

EXPECTED ACTIONS	CUES/STANDARDS ("**CS**" Indicates Critical Standard)

Information	PMP-7030-001-001	Rev. 11	Page 6 of 32
PROMPT NRC NOTIFICATION			

f. Complete the Event Notification Worksheet, NRC Form 361 (Data Sheet 1), or facsimile, and attach all supporting documentation utilized in the determination.

STANDARD: **(CS)** Goes to Data Sheet 1
SAT: ☐ UNSAT: ☐

g. Once an event/condition is determined to be reportable (or potentially reportable), immediately notify the Shift Manager.

h. The Shift Manager shall, for all non-one hour reportable events notify and actively engage the Operations Manager, Plant Manager (or designee), Site Vice President (or designee), Regulatory Affairs Manager, and the Regulatory Affairs Duty Person, in the reportability evaluation and notification process to ensure accurate and timely communication of the event to the NRC.

CUE: The SM will notify the NRC**.**

i. Brief plant management on the event/issue and review the basis for the reportability determination.

j. **IF** time allows, **THEN** contact the on-call NRC Resident Inspector prior to making the notification. **IF** the Resident Inspector cannot be contacted prior to notification, **THEN** contact the Resident as soon as time permits.

k. The SM or designee makes the report to the NRC Operations Center by phone. Support from involved departments should remain available to respond to any questions the NRC contact may have.

NRC OPERATIONS CENTER NUMBERS

1-301-816-5100 (Main)
1-301-951-0550 (Back-Up)
1-301-415-0550 (Back-Up)
8-1-301-816-5151 (Fax)

NRC REGION III REGIONAL ADMINISTRATOR

1-630-829-9657
8-1-630-515-1096 (Fax)

1. **WHEN** informing the NRC of complex issues, **THEN** it is recommended that a copy of the notification be faxed to the NRC to ensure proper documentation of the event.

EXPECTED ACTIONS	CUES/STANDARDS ("**CS**" Indicates Critical Standard)

Information	PMP-7030-001-001	Rev. 11	Page 25 of 32
PROMPT NRC NOTIFICATION			
Data Sheet 1	Event Notification Worksheet		Pages: 25 - 26

PAGE 1 OF 2

NRC FORM 361 (12-2000)

REACTOR PLANT
EVENT NOTIFICATION WORKSHEET

U.S. NUCLEAR REGULATORY COMMISSION OPERATIONS CENTER

EN #

NRC OPERATION TELEPHONE NUMBER: PRIMARY – 301-816-5100 OR 800-532-3469*, BACKUP – [1 ST] 301-951-0550 OR 800-449-3694* [2 ND] 301-415-0550 AND [3 RD] 301-415-0553 *Licensees who maintain their own ETS are provided these telephone numbers.

NOTIFICATION TIME	FACILITY OR ORGANIZATION	UNIT	NAME OF CALLER	CALL BACK #
1400	DC COOK	1	(Candidate Name)	(Any Ext.)

EVENT TIME & ZONE	EVENT DATE	POWER/MODE BEFORE	POWER/MODE AFTER
1325 EDT	6/21/10	0% / MODE 3	0%/ MODE 3

EVENT CLASSIFICATIONS			1-HR NON-EMERGENCY 10 CFR 50.72(b)(1)			
	GENERAL EMERGENCY	GEMA/AAEC	TS Deviation	ADEV	(v)(A) Sub S/D Capability	ASNA
	SITE AREA EMERGENCY	SIT/AAEC	4-HR NON-EMERGENCY 10 CFR 50.72 (b)(2)		(v)(B) RHR Capability	ASNB
	ALERT	ALE/AAEC	(i) TS Required S/D	ASHU	(v)(C) Control of Rad Release	ASNC
	UNUSUAL EVENT	UNU/AAEC	X (iv)(A) ECCS Discharge to RCS	ACCS	(v)(D) Accident Mitigation	ASND
X	50.72 NON-EMERGENCY	(see next column)	(iv)(B) RPS Actuation (scram)	ARPS	(xii) Offsite Medical	AMED
	PHYSICAL SECURITY (73.71)	DDDD	(xi) Offsite Notification	ADPE	(xiii) Loss Comm/Assmt/Resp	ACOM
	MATERIAL/EXPOSURE	E???	8-HR NON-EMERGENCY 10 CFR 50.72 (b)(3)		60-Day Optional 10 CFR 50-73 (a)(1)	
	HUMAN FOR DUTY	HRT	(ii)(A) Degraded Condition	ADEG	Invalid Specified System Actuation	ADSV
	OTHER UNSPECIFIED REQMT.	(see last column)	(ii)(B) Unanalyzed Condition	AUNA	Other Unspecified Requirement (Identity)	
	INFORMATION ONLY	NONR	(iv)(A) Specified System Actuation	AESF		NONR

DESCRIPTION

Include: Systems affected, actuations and their initiating signals, causes, effect of event on plant, actions taken or planned, etc. *(Continue on back)*

Manual ECCS Actuation on lowering RCS Temp & Pressure from steam release through SG #12 safety valve that opened and failed to reseat. RCS stable in mode three, SI terminated per ES-1.1, SI Termination, SG #12 has blown down and all other SGs are stable at 26% to 50% NR level.

NOTIFICATIONS	YES	NO	WILL BE
NRC RESIDENT			X
STATE(S)		X	
LOCAL		X	
OTHER GOV AGENCIES		X	
MEDIA/PRESS RELEASE		X	

ANYTHING UNUSUAL OR NOT UNDERSTOOD? ☐ YES (Explain above) ☒ NO

DID ALL SYSTEMS FUNCTION AS REQUIRED? ☒ YES ☐ NO (Explain Above)

MODE OF OPERATION WHEN CORRECTED: M3

ESTIMATED RESTART DATE: (+72 hrs)

ADDITIONAL INFO ON BACK ☐ YES ☒ NO

STANDARD: Fill in applicable data to include:

- **(CS)** Notification of Time / Facility or organization / Unit
- **CUE:** Use Current time for Notification time
  SAT: ☐ UNSAT: ☐
- Caller / Call Back Number (Can be any plant extension)
  SAT: ☐ UNSAT: ☐
- **(CS)** Event Time & Zone/ Date / Power-Mode(Before and After)
  SAT: ☐ UNSAT: ☐
- **(CS)** Event Classification
  SAT: ☐ UNSAT: ☐
- **(CS)** 4 hr Classification (ECCS Discharge to RCS)
  SAT: ☐ UNSAT: ☐
- Description
  SAT: ☐ UNSAT: ☐
- Notifications (NRC)
  SAT: ☐ UNSAT: ☐
- Other Information
- **CUE**: Estimated restart is 72 hours.
  SAT: ☐ UNSAT: ☐

EXPECTED ACTIONS	CUES/STANDARDS ("**CS**" Indicates Critical Standard)

Information	PMP-7030-001-001	Rev. 11	Page 26 of 32
PROMPT NRC NOTIFICATION			
Data Sheet 1	Event Notification Worksheet		Pages: 25 - 26

ADDITIONAL INFORMATION

PAGE 2 OF 2

RADIOLOGICAL RELEASES: CHECK OR FILL IN APPLICABLE ITEMS (*specific details/explanations should be covered in event description*)

	LIQUID RELEASE		GASEOUS RELEASE		UNPLANNED RELEASE		PLANNED RELEASE		ONGOING		TERMINATED
	MONITORED		UNMONITORED		OFFSITE RELEASE		T.S. EXCEEDED		RM ALARMS		AREAS EVACUATED
	PERSONNEL EXPOSED OR CONTAMINATED				OFFSITE PROTECTIVE ACTIONS RECOMMENDED		*State release path in description.				

	Release Rate (Ci/sec)	% T.S. Limit	HOO GUIDE	Total Activity (Ci)	% T.S. Limit	HOO GUIDE
Noble Gas			0.1 Ci/sec			1000 Ci
Iodine			10 µCi/sec			0.01 Ci
Particulate			1 µCi/sec			1 mCi
Liquid (*excluding tritium & dissolved noble gases*)			10 µCi/min			0.1 Ci
Liquid (tritium)			0.2 Ci/min			5 Ci
Total Activity						

	PLANT STACK	CONDENSER/AIR EJECTOR	MAIN STEAM LINE	S/G BLOWDOWN	OTHER
RAD MONITOR READINGS:					
ALARM SETPOINTS					
% T.S. LIMIT (*if applicable*)					

RCS OR SG TUBE LEAKS: CHECK OR FILL IN APLLICABLE ITEMS: (*specific details/explanations should be covered in event description*)

LOCATION OF THE LEAK (*e.g. SG#, valve, pipe, etc.*):

LEAK RATE:	UNITS: gpm/gpd	T.S. LIMITS:	SUDDEN OR LONG TERM DEVELOPMENT:
LEAK START DATE:	TIME:	COOLANT ACTIVITY & UNITS: PRIMARY -	SECONDARY -

LIST OF SAFETY RELATED EQUIPMENT NOT OPERATIONAL:

EVENT DESCRIPTION (*Continued from front*)

NO ITEMS ON THIS PAGE ARE APPLICABLE

JPM TERMINATION: When Data Sheet is submitted for review, then **"JPM is complete."**

Task Briefing

You are the extra SRO.

The Shift Manager directs you to determine the NRC notification requirements and prepare an event notification worksheet (Data Sheet 1) for prompt NRC NOTIFICATION in accordance with PMP-7030-001-001.

The following plant conditions exist as noted.

- Current time is 1400
- DC Cook Unit 1 was in MODE 3 at Operating Temperature and Pressure. The Shutdown and Control Rods were fully inserted with the Reactor Trip Breakers Open.
- At 1325 today, Steam Generator #12 Safety Valve has opened and did not reseat (remains partially open).
- The Unit 1 operation crew manually initiated Safety Injection due to uncontrolled lowering of RCS temperature / pressure, and Steam Generator #12 pressure continues to lower.
- The Unit 1 operating crew has completed E-0, Reactor Trip and Safety Injection, E-2 Faulted Steam Generator Isolation, and is currently in ES-1.1, SI Termination. SI flow has been terminated per ES-1.1.
- Present RCS conditions: RCS is stable in Mode 3; level in SG #12 is at 5% WR and slowly lowering; all other SGs are being maintained between 26% and 50% NR on auxiliary feedwater; and there is no detectable radiation release in progress.
- All other plant systems responded normally to the event.
- The SM has determined that NO Emergency Classification is required per PMP-2080-EPP-101.