Official Transcript of Proceedings

NUCLEAR REGULATORY COMMISSION

Title: Advisory Committee on Reactor Safeguards
Plant License Renewal Subcommitee
Prairie Island Nuclear Generating Station

Docket Number: (n/a)

Location: Rockville, Maryland

Date: Tuesday, July 7, 2009

Work Order No.: NRC-2945 Pages 1-138

NEAL R. GROSS AND CO., INC.
Court Reporters and Transcribers
1323 Rhode Island Avenue, N.W.
Washington, D.C. 20005
(202) 234-4433

1 UNITED STATES OF AMERICA

2 NUCLEAR REGULATORY COMMISSION

3 + + + + +

4 ADVISORY COMMITTEE ON REACTOR SAFEGUARDS

5 + + + + +

6 SUBCOMMITTEE ON THE PLANT LICENSE RENEWAL FOR THE

7 PRAIRIE ISLAND NUCLEAR GENERATING STATION

8 + + + + +

9 TUESDAY, JULY 7, 2009

10 + + + + +

11 ROCKVILLE, MD

12 The Subcommittee convened in Room T2B3 in the

13 Headquarters of the Nuclear Regulatory Commission, Two

14 White Flint North, 11545 Rockville Pike, Rockville,

15 Maryland, at 8:30 a.m., Harold Ray, Chair, presiding.

16 SUBCOMMITTEE MEMBERS PRESENT:

17 HAROLD RAY, Chair

18 MARIO V. BONACA

19 SAID ABDEL-KHALIK

20 WILLIAM J. SHACK

21 JOHN D. SIEBER

22 J. SAM ARMIJO

23 DANA A. POWERS

24 OTTO L. MAYNARD

25 JOHN T. STETKAR

1

2 CONSULTANT TO THE SUBCOMMITTEE:

3 JOHN J. BARTON

4

5 NRC STAFF PRESENT:

6 CHRISTOPHER BROWN, Designated Federal Officer

7 BRIAN HOLIAN

8 SAMSON LEE

9 RICK PLASSE

10 STU SHELDON

11 RUI LI

12 DUC NGUYEN

13 ERACH PATEL

14 GANESH CHERUVENKI

15 ABDUL SHEIKH

16 ON YEE

17 ALSO PRESENT:

18 GENE ECKHOLT

19 MIKE WADLEY

20 STEVE SKOYEN

21 JOE RUETHER

22 PHIL LINDBERG

23 RICHARD PEARSON

24 SCOTT McCALL

25 TOM DOWNING

1 MATTHEW McCONNELL

2

3 TABLE OF CONTENTS

4 Introductions.....5

5 Applicant Presentation.....9

6 NRC Presentation.....85

7 Subcommittee Discussion.....129

8

9

10

11

12

13

14

15

16

17

18

19

20

21

22

23

24

25

P-R-O-C-E-E-D-I-N-G-S

INTRODUCTIONS

CHAIRMAN RAY: The meeting will now come to order. This is a meeting of the plant license renewal sub-committee. I'm Harold Ray, chairman of the Prairie Island Plant License Renewal Sub-committee.

ACRS members in attendance are Mario Bonaca, William Shack, Sam Armijo, Dana Powers, Otto Maynard, John Stetkar, Jack Sieber, Said Abdel-Khalik, and our consultant, John Barton. I expect that member Mike Ryan will join us during the course of the meeting.

The purpose of this meeting is to review the application for the Prairie Island Plant License Renewal, the Draft Safety Evaluation Report, and associated documents. We will hear presentations from the representatives of the Office of Nuclear Reactor Regulation and the applicant, Northern States Power, a Minnesota corporation.

The sub-committee will gather information, analyze relevant issues and facts, and

1 formulate proposed position and action as appropriate
2 for deliberation by the full committee.
3 The rules for participation in today's
4 meeting were announced as part of the notice of the
5 meeting, previously published in the Federal Register
6 on June 16, 2009. We have not received any requests
7 from members of the public wishing to make oral
8 statements.
9 A transcript of the meeting is being kept
10 and will be made available as stated in the Federal
11 Register notice, therefore we request that
12 participants in this meeting use the microphones
13 located throughout the meeting room when addressing
14 the sub-committee. Participants should first identify
15 themselves and speak with sufficient clarity and
16 volume so that they can be readily heard.
17 Somewhere I overlooked the fact that our
18 designated federal official is Mr. Brown, Christopher
19 Brown.
20 We will now proceed with the meeting and
21 I'll call on Brian Holian of the Office of Nuclear
22 Reactor Regulation to introduce the presenters.
23 Brian?
24 MR. HOLIAN: Thank you. Good morning. My
25 name is Brian Holian. I'm director of the Division of

1 License Renewal. To my right is Dr. Sam Lee, deputy
2 director of the Division of License Renewal, and to
3 his right is Mr. Rick Plasse, the project manager for
4 the Prairie Island review.
5 We have several other branch chiefs from
6 both technical divisions and license renewal in the
7 audience and we'll hear probably from some of those
8 later during the NRC presentation. We would like to
9 highlight two of the staff or one staff and one
10 contractor that's also with us today.
11 First is Dr. Stu Sheldon, who is the
12 senior rafter inspector from region 3. You'll be
13 hearing from him on inspection results and he's right
14 here in the first row.
15 Secondly, we have a contractor here from
16 Oak Ridge. That's Dr. Naus. He helped the staff with
17 a site visit and part of our review on some of the
18 containment structural issues at Prairie Island.
19 Just a couple other opening items on the
20 Prairie Island review. One, the staff does have three
21 open items that you'll be hearing in part of the
22 presentation today. Progress is being made on all the
23 open items.
24 One was a scoping issue related to the
25 waste gas decay tank. The second item where the staff

still -- was more of a timing issue. We still needed to just review the PWR vessel internals program that they submitted, so that's why that's open.

The third item was some leakage and water seepage from a refueling cavity. That's been an item, I think, yes, the committee has heard from on Indian Point a few months back and is an item we're paying particular attention to on some of the plants that have had some historical leakage.

The only other item I'd like to mention really has two parts, and that's just to note that Prairie Island is a hearing plant. They are on a hearing schedule.

There were originally seven contentions that were admitted. Five of those have been closed. There were four safety contentions and one environmental contention that have been closed through the ASLB process. There's just two contentions remaining and they're both on the environmental side of the house, environmental review.

The last item I'd like to recognize is that on Prairie Island, we did have a unique memorandum of understanding that we established with the Prairie Island Indian community and in

1 particular, to get their input on environmental
2 issues surrounding the plant.
3 So that's been working well and we've
4 been working with Prairie Island, both on the
5 inspection and on the review.
6 With that, I'll turn it over to the site
7 vice-president, Mr. Mike Wadley.
8 CHAIRMAN RAY: Mike, before you begin, I
9 also failed to introduce our consultant to the sub-
10 committee, Mr. John Barton. Please proceed.
11 MR. WADLEY: Thank you, Chair. Gene, I was
12 going to lead us through the introductions here.
13 MR. ECKHOLT: Yes. My name is Gene
14 Eckholt. I'm the project manager for the Prairie
15 Island License Renewal Project.
16 I want to thank the committee for the
17 opportunity to discuss license renewal at Prairie
18 Island and run through some introductions.
19 At the front table, we've got Mike
20 Wadley, the site vice-president and we've got Steve
21 Skoyen, our engineering program manager.
22 We've also got a number of license
23 renewal project team members and subject matter
24 experts with us today.
25 At the side table are my four engineering

1 supervisor leads for the project. Phil Lindberg, the
2 programs lead. Scott Marty, the mechanical lead,
3 Richard Pearson, the civil structural lead, and Joe
4 Ruether, the electrical lead.
5 We also have Scott McCall, the plant
6 system engineering manager and from the projects
7 organization, we have Charlie Bomberger, the vice
8 president of nuclear projects and Ken Albrecht, the
9 general manager of major nuclear projects.
10 Sticking to the agenda, we'll start with
11 some background information on the plant -- the
12 operating history, brief information on the plant,
13 major improvements. We'll talk some on the license
14 renewal project and the methodology we used in
15 developing the licensure application.
16 We'll talk briefly about implementation
17 of license renewal at Prairie Island and the status
18 of that. Then we will talk on specific items of
19 technical interest, in particular, the three open
20 items in the SER.
21 At this point, I'd like to turn it over
22 to Mike Wadley.
23 APPLICANT PRESENTATION
24 MR. WADLEY: Thanks, Gene. Chair,
25 committee members, good morning.

1 NSP, Northern States Power - Minnesota is
2 a wholly owned subsidiary of Xcel Energy and is the
3 owner and operator of the Prairie Island Nuclear
4 Generating Plant.
5 The plant is located on the Mississippi
6 River southeast of Minneapolis and Saint Paul.
7 Prairie Island is a two-loop Westinghouse pressurized
8 water reactor with a thermal output of 1600 megawatts
9 and a gross electrical production of 575 megawatts
10 electrical.
11 Pioneer Service and Engineering was the
12 plant's architect engineer. Prairie Island has a dual
13 containment consisting of a steel containment
14 surrounded by a limited leakage concrete shield
15 building separated by a five foot annular space.
16 The ultimate heat sink for the units is
17 the Mississippi River via our clean water system. The
18 plant's steam cycle cooling is once-through cooling
19 supplemented by forced draft cooling towers, which
20 are used on a seasonal basis to support effluent
21 discharge per metric requirements.
22 Construction permits were issued in June
23 of 1968 and operating licenses were later. One was
24 issued in August of `73 and unit two in October of
25 1974. We submitted our license renewal application in

1 April of 2008.

2 Both units completed their 25th refueling

3 outage in 2008. Both units operate on an 18-20 month

4 cycle. Lifetime capacity factors for the station are

5 84.2 and 86.5 for units 1 and 2, respectively.

6 Current cycle capacity factors are 96.6

7 and 98. Refueling outages are scheduled for unit 1

8 this fall and next spring, for unit 2.

9 Some major improvements have taken place

10 at the station since it began operation. In 1983, we

11 constructed a new intake screen house and re-

12 configured our intake and discharge canals. That

13 allowed us to go to seasonal operation with our

14 cooling towers.

15 In 1986 and 87, we replaced the reactor

16 vessel and internals as our response to the split-

17 pin issues the industry had experienced.

18 In 1993, we added two new diesel

19 generators on unit 2 and were able to separate the

20 safety-related electrical systems on unit 1 and unit

21 2.

22 At the same time, to improve operational

23 flexibility, one of our three non-safeguards or

24 safety-related cooling water pumps was upgraded to

25 safety related to provide a backup to the two diesel-

1 driven cooling water pumps used in the safety related
2 system.
3 With that, I'll turn it back to Gene.
4 MR. ECKHOLT: I want to talk a little bit
5 about the license renewal project, the development of
6 the license renewal application, get into the various
7 phases of the project, and wrap up talking about the
8 commitment that was made in response to license
9 renewal.
10 The license renewal project team was
11 headed up by four engineering supervisors that are
12 full time NSP employees. They have extensive plant
13 knowledge and experience.
14 In addition to that -- I mean, they had a
15 lot of plant experience, but they didn't have a lot
16 of background in license renewal, so coming into the
17 project, at the time the project started in 2005, we
18 were part of the Nuclear Management Company.
19 There were three other active license
20 renewal projects underway in NMC at that time, so we
21 used the experience of the other members of the fleet
22 to help train our folks. We utilized their processes
23 extensively and used that to beef up our knowledge
24 and program going into the project.
25 We also utilized a number of contract

1 support staff members that all had significant
2 license renewal experience, both within NMC and at
3 other plants.
4 Plant staff, plant subject matter experts
5 were also very actively involved in the project. They
6 reviewed a number of the LRA input documents during
7 the development of the LRA.
8 They also were very actively involved in
9 support of the license renewal audits and the region
10 3 inspection in January.
11 We also remained engaged with the
12 industry, mainly through the NEI license renewal
13 taskforce and the associated working groups.
14 We also observed audits at a number of
15 plants, NRC audits at a number of plants and
16 participated in the peer reviews of other plants'
17 LRA's as we were developing ours.
18 Again, our project started in 2005, which
19 is about the time that NEI 95-10 was brought to Rev
20 6, so our project's process and procedures were based
21 on Rev 6 of NEI 95-10. The processes we used were
22 consistent with the guidance of that NEI document.
23
24 The boundary drawings that we provided
25 highlighted components for all the scoping criteria.

1 One other thing to note is that the switchyard
2 scoping boundary in the Prairie Island LRA does
3 include breakers at the transmission system voltage.
4 MR. BARTON: Question on your scoping,
5 please.
6 I noticed you have site lighting as
7 listed as in scope for license renewal. It's the
8 first application I've seen with site light. What's
9 different about your site lighting?
10 MR. ECKHOLT: Joe, maybe you'd like to
11 touch on that.
12 MR. RUETHER: This is Joe Ruether. We took
13 a bounding approach, so we brought all electrical
14 components in and dealt with the scoping screen on a
15 commodity basis.
16 So it didn't make any difference what the
17 -- site lighting was basically all the components for
18 electrical and brought into scope.
19 MR. BARTON: Okay, thank you.
20 MR. ECKHOLT: The next slide is a
21 simplified drawing of our switchyard, showing in red
22 those components that were brought into scope based
23 on our CLB.
24 In blue, is the expanded scope that was
25 brought in to meet the expectations of the proposed

1 ISG 2008-01 on SBL.

2 Again, the aging management reviews were

3 done in accordance with NEI 95-10. We maximized all

4 consistency to the extent possible. In the end, we

5 were just a little over 89 percent consistent with

6 GALL for the AMR line items. That's assuming notes A-

7 D.

8 Some plants have gone and used E as well.

9 We did not do that.

10 Aging management programs -- there were

11 43 aging management programs identified in the LRA.

12 29 are existing at the plant. 14 are new.

13 Program consistency with the GALL -- 31

14 are consistent. Of those 31, nine also include

15 enhancements. 10 programs are consistent with

16 exceptions. Of those, six also contain enhancements.

17 There are two plant-specific programs,

18 the nickel alloy nozzles and penetrations program and

19 the PWR vessel internals program are both plant-

20 specific.

21 Of the GALL exceptions, we've tried to

22 summarize here what we'd call typical GALL

23 exceptions. They include the use of more recent

24 revisions of industry standards and the revisions

25 cited in the GALL, the use of different or additional

1 industry standards, alternatives to performance
2 testing specified in the GALL.
3 Those would be in cases where there
4 wasn't instrumentation or equipment available to
5 perform the performance testing specified in the
6 GALL.
7 Also, the use of alternative detection
8 techniques or more recent NRC guidance than GALL
9 requirements in cases where we used alternates to
10 inspection test frequencies specified in the GALL.
11 Time limiting aging analysis was
12 performed in accordance with NUREG-1800 guidance and
13 95-10. The TLA's were evaluated in accordance with 10
14 CFR 54.21(c)(1).
15 MEMBER SHACK: Question. Are you currently
16 using a stress-based fatigue monitoring system?
17 MR. ECKHOLT: No.
18 MEMBER SHACK: Okay, that's a will.
19 MR. ECKHOLT: The LRA was submitted with
20 stress-based, but we completed the ASME code
21 confirmatory analysis and eliminated the stress-based
22 fatigue from the LRA.
23 MEMBER SHACK: And so you can leap the
24 environmentally enhanced fatigue?
25 MR. ECKHOLT: Yes.

1 MEMBER SHACK: Are you strictly cycle
2 counting on all these -- I mean, you've got a list of
3 components here from 6260, some of which you had
4 planned to do cycle counting and some of which you
5 had planned to do --
6 MR. ECKHOLT: This is Phil. Phil Lindberg,
7 our programs lead. He could maybe give more detail.
8 MR. LINDBERG: This is Phil Lindberg, Xcel
9 Energy.
10 Could you repeat the question again?
11 You're interested in our cycle counting?
12 MEMBER SHACK: I'm looking at Appendix B
13 for the fatigue monitoring and you take the 6260
14 locations and you've got -- essentially, there's
15 three different methods.
16 There's cycle counting. There's stress-
17 based fatigue usage monitoring, and then there's
18 cycle based fatigue usage monitoring.
19 I'm not sure what the differences between
20 the two are, but then the statement seems to be that
21 you're not going to use stress-based monitoring
22 anymore.
23 MR. LINDBERG: That is correct. We're not
24 planning to use stress-based fatigue monitoring for
25 any of those EAF locations. We have section 3 fatigue

1 analysis of all six new reg 6260 locations.
2 Initially, as Gene mentioned, the
3 original submittal went in with SBF numbers for a few
4 of those locations and given the issues with the
5 industry with SBF, we redacted that information. We
6 went ahead and did -- for the hot leg nozzle and the
7 charging nozzle, we went ahead and did full ASME
8 section 3 analyses, which used design cycles.
9 So we have standing section 3 analyses
10 with applied FEN values that we show acceptance for
11 60 years. We do intend to continue to count cycles of
12 those design cycles as part of our metal fatigue
13 program.
14 MEMBER SHACK: And there's an update of
15 the Appendix B that makes that statement?
16 MR. LINDBERG: Yes. It was submitted via
17 RAI responses.
18 MEMBER SHACK: Okay.
19 MR. LINDBERG: Thank you.
20 MR. ECKHOLT: There are 36 regulatory
21 commitments that were identified that currently
22 exist, with respect to license renewal.
23 Those commitments are tracked to the
24 Prairie Island Commitment Tracking Program. They have
25 been assigned to the station personnel responsible

1 for implementation prior to the period of extended
2 operation.
3 At this point, I'll turn it over to Steve
4 Skoyen who will talk about the implementation
5 activities.
6 MR. SKOYEN: Well, the implementation
7 impacts all of our plant departments. The
8 coordination of the implementation itself is the
9 responsibility of our engineering programs
10 department.
11 Because we're going to be implementing a
12 number of new requirements associated with 10 CFR 54,
13 we are managing that under a changed management plan,
14 which is a formal process at the site.
15 All of our aging management programs have
16 assigned owners. Those owners have been involved in
17 the aging management program reviews as well as the
18 audits and inspection.
19 In support of the additional staff
20 required to implement the license renewal program, we
21 hired two additional staff earlier this year so that
22 they can work with a project team who has been
23 working on the project for the last three or four
24 years.
25 They are currently working on planning

1 and scheduling of new requirements.

2 MEMBER POWERS: What does it mean that the

3 programs have planned owners?

4 MR. SKOYEN: They are assigned program

5 owners. Two are aging management programs. Some of

6 those are existing. Some of those are new programs.

7 There are individuals associated with

8 those that understand they have that responsibility

9 going forward for coordinating associated inspections

10 and requirements.

11 MEMBER POWERS: I guess I still don't

12 understand. If I'm a program owner, what is it? What

13 do I have to do?

14 MR. SKOYEN: As program owner, you're

15 responsible for ensuring the requirements of that

16 program are implemented at the station, whether it's

17 performance of inspections, evaluations analyses.

18 MEMBER POWERS: If I get hit by a truck?

19 MR. SKOYEN: We have back-up program

20 owners identified for each program. Most of those are

21 managed in accordance with our program health process

22 for existing programs.

23 Going forward, new programs would be

24 incorporated into that process as well.

25

1 MEMBER POWERS: This is different how? It
2 doesn't seem like an unusual management structure at
3 all on how you would do anything.
4 MR. SKOYEN: Yes, I don't know that it
5 isn't that much different.
6 There are new requirements that we have
7 to ensure that we implement. That's what the
8 additional staff will be monitoring and tracking to
9 ensure that those new commitments we made are
10 implemented.
11 MEMBER POWERS: If I'm sitting at my desk
12 and one day you come in and you say okay, you're in
13 charge of this program, has anything changed in my
14 life other than that I now have another job?
15 MR. SKOYEN: You have additional
16 responsibility for that program, additional
17 responsibility for ensuring that those requirements
18 are implemented. There may be some training
19 associated, add a qualification.
20 MR. WADLEY: I think what we were trying
21 to convey is that we're already starting to integrate
22 the programs into the plant operation. It's not
23 just sitting in a project group, but we're trying to
24 bridge that gap between now and a period of extended
25 operation to make it so it's seamless. That's really

1 all we're trying to say.
2 MEMBER POWERS: That's really I was
3 looking for. You guys now have it.
4 MR. WADLEY: Yes.
5 MEMBER POWERS: And presumably, they're
6 learning what it means because they haven't part of
7 your project team.
8 MR. WADLEY: Exactly.
9 MEMBER POWERS: I mean, if somebody came
10 in and told them they were in charge of this and they
11 said what the hell is this, right?
12 MR. WADLEY: Yes, there would be a glazed
13 look on their face and they wouldn't move forward.
14 MEMBER POWERS: Yes.
15 MR. WADLEY: But that's really what we're
16 trying to get is that we're starting.
17 MEMBER POWERS: That's what I was looking
18 for.
19 MR. ECKHOLT: And keeping them involved or
20 getting them involved during the review of the LRA
21 input documents and the audits helps them understand
22 so that it isn't dumped on them at the last minute as
23 our project wrapped up. They've been involved all
24 along.
25

1 MR. SKOYEN: Any additional questions?
2 MR. ECKHOLT: Okay, we will move onto what
3 we're calling specific technical items of interest.
4 We'll talk about underground medium
5 voltage cables of Prairie Island. We'll also talk
6 about the three SER open items under this topic.
7 CHAIRMAN RAY: Before you do that, I'm
8 mindful of the fact that we'll go into some areas
9 that are currently open and have a lot of interest
10 perhaps.
11 But I wanted, if this is the right spot
12 to ask some questions about some issues that aren't
13 open, but were addressed in your RAIs and had at
14 least triggered some questions in my mind.
15 MR. ECKHOLT: Sure.
16 CHAIRMAN RAY: One of them has to do with
17 coatings. There was quite a lengthy discussion of
18 your response to not having an aging management
19 program for coatings, side containment.
20 I guess the essence of it is that, to
21 quote here a sentence here from the response,
22 analysis demonstrated that debris will not prevent a
23 safety-related component from performing its intended
24 function. It assumes that all qualified coatings are
25 within the zone of influence. In the worst case, pipe

1 break will fail and all unqualified coatings and site
2 containment fail and become debris along with other
3 debris that could be generated by a pipe break.
4 I guess I'm asking myself isn't this true
5 everywhere? I mean, why is a coatings program called
6 for at all for anyone given -- is there something
7 unique, I guess I'm asking, about this pant that
8 makes it invulnerable to coatings failure as compared
9 with other plants?
10 MR. ECKHOLT: We're no different than any
11 other plant with respect to coatings. The difference
12 is that when our LRA was initially submitted, we did
13 not include containment coatings.
14 However, it was raised as a contention as
15 part of the hearing process that it wasn't there. So
16 in an effort to resolve the contention, we went ahead
17 and brought containment coatings into the license
18 renewal program. We added containment coatings
19 program.
20 Well, actually, we brought the existing
21 program into license renewal space. That was the
22 intent of bringing it in -- was to resolve the
23 concerns raised in the hearing process.
24 CHAIRMAN RAY: So it is in scope even
25 though -- I'm still not clear. Do you have a program

1 for monitoring coatings?

2 Elsewhere here, it says, for example,

3 therefore coatings inside containment do not fall

4 within the scope of 10 CFR 50.54(a)(2). Since they

5 are not components, it's fair to prevent satisfactory

6 accomplishment and so on.

7 MR. ECKHOLT: Right. We did not bring the

8 coatings into scope. We did not feel in the initial

9 application that the coatings performed an intended

10 function. But again, we brought the program in --

11 CHAIRMAN RAY: What's the status now? Do

12 you have a coatings?

13 MR. ECKHOLT: Yes, we have a coatings

14 program that meets all the industry and NRC

15 expectations and standards.

16 CHAIRMAN RAY: And that's a change, is it?

17 MR. ECKHOLT: No. No, that was in place.

18 That was an existing program and basically, we

19 brought that into scope.

20 MR. WADLEY: But it's a change from our

21 original application.

22 MR. ECKHOLT: It's a change from the

23 original application.

24 CHAIRMAN RAY: That's what I was trying to

25 get at. Right, thank you, because I was really

puzzled by having read this and then listening to what you said.

MR. BARTON: Let me make sure I understand. You now have an aging management program for coatings?

MR. ECKHOLT: Yes.

MR. BARTON: Okay.

CHAIRMAN RAY: All right. That, I think, settles that.

MEMBER POWERS: How do you tell when a coating has aged? Is that the indicator or do you have something that --?

MR. ECKHOLT: Maybe Richard, you can --?

MR. PEARSON: Yes. This is Richard Pearson from Xcel Energy, Prairie Island.

The coatings program that's in place at the plant, first of all, you have qualified coatings. They are monitored, like on a containment vessel well, by inspection, but the qualified coatings have been demonstrated really not to degrade.

Then you have the other series of coatings that total program involves inspection. It involves how we put new coatings on. It involves qualification of painters, qualifications of coatings that go into containment. It involves lockdowns that

1 ensure the amount of unqualified coatings we have in
2 containment is still understood and is being able to
3 be tracked.
4 MEMBER POWERS: Your indicator of a failed
5 coating, qualified or not, is it falls off --
6 blistered, delaminated -- whatever?
7 MR. PEARSON: That's correct.
8 MEMBER POWERS: You do not have an
9 instrumental indication of aging?
10 MR. PEARSON: No. It's only a visual
11 inspection.
12 MEMBER POWERS: I'll tell you an amusing
13 anecdote. I got interested in coatings on aircraft in
14 the military. They spend a huge amount of money
15 trying to design a device to inspect the coatings, to
16 tell them when to re-paint their airplanes.
17 So I went over to the Military Airlift
18 Command to see if they used this and the guy says, we
19 never used that. We just look at it and when it looks
20 like it's about to fall off, we re-paint it.
21 MR. WADLEY: Visual inspections.
22 MEMBER POWERS: Visual inspections.
23 MR. PEARSON: This is Richard Pearson
24 again. If we find degraded coatings, there's some
25 standards we can use for testing them out or the

extent of degradation. We'll take measurements, characterize it as best we can.

MR. ECKHOLT: Thanks, Richard.

CHAIRMAN RAY: Okay on coatings?

Another question I had -- similarly, you have a discussion about flow-accelerated corrosion, correlation methods, and so on, ending up with use of CHEKworks. But it says Prairie Island does not experience excessive flow of accelerated corrosion that was not predicted by CHEKworks. That's good.

Could you just comment on what -- have you done much replacement of piping for flow-accelerated corrosion reasons or do you expect to, I guess?

MR. ECKHOLT: Steve?

MR. SKOYEN: We've not done a great deal of replacement. Typically, during a re-fueling outage, we'll replace a couple of typically smaller lines -- two or three inch, as well as penetrations into the condenser -- but in terms of large components, we've not experienced a great deal of replacement.

MEMBER ARMIJO: When you do these replacements, do you replace them with the same material or more resistant materials -- chrome moly

1 and things like that?

2 MR. SKOYEN: Typically, they're replaced

3 with the same material, but if in the determination

4 of the engineer, replacing that with a more resistant

5 material because of the wear rate in that particular

6 area is higher than expected, we will replace for

7 that in materials.

8 CHAIRMAN RAY: Enough on that. I have only

9 one or two more in this category.

10 One of them that caught my attention was

11 having to do with above-ground steel tanks program.

12 The response to the RAI on this asserts that

13 inspection is done of just one of the three storage

14 tanks because it's representative of the other two

15 and is sufficient.

16 Can you say a little bit more about why

17 you're so confident that you don't need to inspect

18 all three condensate storage tank bottoms?

19 MR. ECKHOLT: Phil?

20 MR. LINDBERG: This is Phil Lindberg, Xcel

21 Energy.

22 Basically, we felt we had similar

23 materials and similar environments such that our

24 inspection of one condensate storage tank would

25 reflect all three tanks.

1 Certainly, if we were to find any
2 evidence of degradation on that one tank, we would
3 certainly expand our inspection scope to the
4 remaining tanks.
5 MR. WADLEY: Phil, could you talk a little
6 bit about how we intend to inspect those tanks?
7 MR. LINDBERG: It is a visual external
8 inspection. The tanks are insulated, so the
9 inspection would be of the external insulation
10 looking for insulation damage or signs of rust or
11 discoloration coming from the insulation.
12 We've also stated that we would remove
13 insulation at lower points or at points that would be
14 expected that might indicate damage and that we would
15 physically inspect the exterior tank, the carbon
16 steel tank surface underneath that insulation on a
17 periodic basis.
18 CHAIRMAN RAY: Well, I'm referring to the
19 ultrasonic inspection of the tank bottom.
20 MR. LINDBERG: I'm sorry.
21 CHAIRMAN RAY: And it just says that we're
22 just going to do one because that will tell us all we
23 need to know. I'm just curious about why you think
24 just one UT inspection is representative of all three
25 tanks. I mean, that's what asserted here, but it's

1 not clear why.

2 MR. LINDBERG: I guess from the way we

3 looked at it, it was similar to how the inspections

4 for, for example, for the one time inspection program

5 -- were done to confirm the absence of aging on a

6 sampling approach.

7 CHAIRMAN RAY: Okay, but you don't have

8 any other rationale for one is enough?

9 MR. LINDBERG: I don't have any plant-

10 specific OE, no.

11 CHAIRMAN RAY: Okay. And then my

12 colleagues on the committee here probably can help me

13 with this last one that has to do with materials

14 leaching program. It's something I'm not familiar

15 with.

16 But basically, your response to the RAI

17 indicated that a visual inspection was deemed to be

18 sufficient and adequate. Do you have any other

19 comment on that or I offer my esteemed colleagues to

20 question whether that's enough selective leaching of

21 materials.

22 It's elevated a status of a program, but

23 some folks felt that it was sufficient simply to do a

24 visual inspection, as I read this. I gather you

25 haven't had any experience with it?

1 MR. WADLEY: No, we haven't. No.
2 CHAIRMAN RAY: Can you add anything to my
3 --?
4 MR. LINDBERG: This is Phil Lindberg. No,
5 actually, our selective leaching program will use
6 visual inspection in conjunction with either hardness
7 testing or a mechanical scraping. It's not strictly
8 visual.
9 MEMBER ARMIJO: What are the materials in
10 your leaching program? What materials are you
11 inspecting?
12 MR. LINDBERG: Could you repeat the
13 question?
14 MEMBER ARMIJO: Yes. What materials are
15 concerned?
16 MR. LINDBERG: This would be for cast iron
17 and for copper alloys containing greater than 15
18 percent zinc.
19 MEMBER ARMIJO: Okay, so it's basically
20 brass and cast iron?
21 MR. LINDBERG: That's correct. Like I
22 said, we would be doing visual inspection in addition
23 to either a mechanical scraping or hardness test or
24 other available detection technique.
25 We have an exception to the program that

1 discusses the use of alternate detection techniques
2 beyond hardness testing.
3 MEMBER ARMIJO: Have you had to replace
4 any of these materials?
5 MR. LINDBERG: We have not done any
6 inspections to date. This is a new program.
7 CHAIRMAN RAY: It just caught my attention
8 that it was an exception, as he indicated. I'm not
9 familiar enough with it to know whether it's
10 exception --
11 MR. LINDBERG: The GALL recommendation is
12 for a visual inspection in conjunction with hardness
13 test.
14 CHAIRMAN RAY: Right.
15 MR. BARTON: Expand on Mr. Ray's question
16 on the condensate storage tank, the bottom
17 inspection.
18 How are these tanks mounted? What's the
19 foundation? Tell me how they're installed.
20 MR. PEARSON: This is Richard Pearson. The
21 condensate storage tanks sit on a concrete base and
22 then they actually have some hold-downs on them. The
23 tank is held down to the concrete base.
24 I'm not sure what kind of coating was put
25 on the tank when it was installed, but when you look

1 at them as a concrete base, you see the joint,
2 basically, between the condensate storage tank, the
3 insulation, the concrete base.
4 Does that answer the question?
5 MR. BARTON: Yes, so my next question is,
6 how can you be assured that you don't have moisture
7 under the tank that you didn't inspect and you do
8 have some corrosion going on in the tank bottom if
9 you're only going to do one of three -- what do you
10 have? Two tanks? Three tanks, okay. Suppose you pick
11 the wrong tank.
12 I mean, how are you assured that there's
13 no leakage getting underneath between the joint in
14 the bottom of the tank and the concrete foundation?
15 MR. LINDBERG: This is Phil Lindberg. Part
16 of that external visual inspection would be of that
17 joint between the tank and the foundation. So if,
18 again, if we were to find degradation of that joint,
19 that would be an indication of potential intrusion,
20 water intrusion, and we would likely end up doing
21 some UT inspection on that.
22 MEMBER STETKAR: That joint is not sealed,
23 am I correct?
24 MR. LINDBERG: This is a -- I'm not sure
25 what the material is. There's some type of sealant at

1 the joint.

2 MEMBER STETKAR: If the tank would leak,

3 would you see traces of that leakage on the concrete

4 base and outside the tank?

5 MR. ECKHOLT: You should, yes.

6 MR. BARTON: Well, if it's sealed, how

7 would you see it?

8 MEMBER ARMIJO: That is the question.

9 MEMBER MAYNARD: Are you doing the visual

10 inspection on all three or just on one?

11 MR. LINDBERG: On all three. The visual is

12 on all three,

13 MEMBER STETKAR: Yes, you can't visually

14 inspect the bottom of them.

15 MEMBER MAYNARD: Right.

16 CHAIRMAN RAY: Okay on the tank bottoms?

17 John Stetkar had a question.

18 MEMBER STETKAR: Two quick ones. Back to

19 the selective leaching. Do you have any in-scope

20 systems that have buried cast iron piping?

21 MR. MCCALL: Hi, this is Scott McCall with

22 Xcel. Yes, fire protection piping is buried in cast

23 iron.

24 MEMBER STETKAR: That's the only one?

25 MR. MCCALL: Yes.

1 MEMBER STETKAR: The second question I had
2 -- you had a couple of exceptions on your fuel oil
3 chemistry program. I think I understand the
4 rationale.
5 One of the exceptions you took is you
6 weren't going to sample for biological activity. I
7 think, as I understand it, the argument is that you
8 have very small filters and your normal sampling
9 program would detect any sludge that might be
10 generated by any type of biological attack.
11 Are all your samples taken directly from
12 the bottom of each of your tanks or are your sample
13 points elevated above the bottom of the tank so that
14 you could have a sludge build up without actually
15 detecting it?
16 MR. MCCALL: I'm not sure if I have the
17 answer to that question. I know some of our sampling
18 is done at top, middle, and bottom locations. The
19 sampling is coming from some place near the bottom of
20 the tank.
21 MR. ECKHOLT: We'll verify that. We can
22 get an answer for that. We'll verify that.
23 MEMBER STETKAR: I think in the interest
24 of time, let's go on to the more interesting topics.
25 CHAIRMAN RAY: All right, we'll reserve

1 the -- return to these less interesting ones later.
2 Go ahead.
3 MR. ECKHOLT: All right. I'll turn it back
4 over to Steve to talk about underground medium
5 voltage cables.
6 MR. SKOYEN: We did have a failure of a
7 circulating water pump cable that resulted in a unit
8 1 trip in May of this year.
9 That cable was replaced. It was a ground
10 fault. We are currently in the process of continuing
11 a cause evaluation and the cable is currently at EPRI
12 for testing.
13 We have experienced three other cable
14 failures. Two of those on 14.8 kilovolt lines and one
15 on a 41.16.
16 The two on the 14.8 volts were identified
17 at the cable terminations. Both of them related to
18 water intrusion. One actually resulted in a ground
19 fault. One was taken out of service prior to failure.
20 Those cables were subsequently replaced in 2005.
21 We've also had one 41.16 failures, I
22 mentioned. That was also at a termination. That one
23 was actually identified during an outage. The cause
24 of that particular one was manipulation over time
25 during maintenance that had weakened the insulation.

1 Going forward, our cable insulation
2 testing will be part of a new program that's being
3 implemented called the inaccessible medium voltage
4 cables. That's subject to 10 CFR 50.49 Environmental
5 Qualification Requirements Program.
6 MEMBER BONACA: This is a new program?
7 MR. SKOYEN: Yes, this is a new program.
8 That's correct.
9 MEMBER BONACA: You did not have a program
10 that responds to the failures you experienced.
11 MR. SKOYEN: In response to generic letter
12 2000-701, we have a cable program currently at the
13 site. We had been MEGR testing cables for a number of
14 years.
15 MR. BARTON: In that letter, you said you
16 would have a program in place by the end of the 2007.
17 When the inspection team was out there in
18 September 2008, they said you didn't have a program
19 in place, although it was in the commitment tracking
20 system. Yet, the SER says you had a program in place
21 in March 2008.
22 What's the story? Is there a cable
23 maintenance program in place at the site at this
24 time?
25 MR. SKOYEN: There currently is a cable

1 program in place, as you mentioned, that we had
2 intended to implement that program by the end of
3 2007. That implementation was delayed. That program
4 has now been implemented.
5 MR. BARTON: Is that because somebody
6 missed it in the commitment tracking system or did
7 you change the date in the commitment tracking
8 system?
9 MR. ECKHOLT: That was never entered -- it
10 was not identified as a formal commitment.
11 MR. BARTON: It was not?
12 MR. ECKHOLT: It was not. It was not in
13 the commitment tracking system. It was basically a
14 statement of our intent to implement the program by a
15 certain date.
16 MR. BARTON: So your answer to the generic
17 letter was you intended to have it, but you didn't
18 put any commitment? You didn't cite commitment on it?
19 MR. ECKHOLT: It was not identified as a
20 formal commitment.
21 MR. BARTON: Okay.
22 MEMBER STETKAR: To what extent do you
23 have water intrusion in underground medium voltage
24 cable ductwork?
25 MR. SKOYEN: Joe?

1 MR. RUETHER: This is Joe Ruether. I
2 didn't hear the question.
3 MEMBER STETKAR: To what extent have you
4 found water intrusion in underground medium voltage
5 cable ductwork or other conduits and holes?
6 MR. RUETHER: The two examples in the
7 13.8, we've seen water in those cables and replaced
8 that, as we referred to earlier.
9 And then, also, in this recent May, cable
10 -- a motor pump cable for unit one that looks like it
11 may have water involved in that as well. The root
12 cause is not complete, so it's --
13 MEMBER STETKAR: Do you pull manholes or
14 other types of covers to inspect? If you do, how
15 often do you do it? Which ones do you do?
16 MR. RUETHER: We have, as far as in scope
17 of license renewal, medium voltage. We have one
18 manhole involved there.
19 When we replaced the 13.8 kV cable, we
20 put in a whole new ditch, a whole new routing. We put
21 a new manhole at that time in 2005.
22 We've looked at water level -- opened up
23 the cover several times, have not seen water or any
24 indication of water, looking on the sides to see if
25 any water has been in there.

MEMBER STETKAR: Do you have a procedure to periodically pull the manhole covers to inspect the water?

MR. RUETHER: Yes, we do.

MEMBER STETKAR: Is that on occasion?

MR. RUETHER: No -- yes, we do. It's in the PM program.

MEMBER STETKAR: How often?

MR. RUETHER: We initially looked at quarterly and then it was determined that we didn't see evidence. That was subsequently changed to every four years.

Based on the experience from license renewal, we'll be committed to doing that inspection every two years.

MEMBER STETKAR: That's a long time. If I were to look at a site clock plan, where's the manhole where you have seen water or where you inspect? Is it the one out at the screenhouse? 13 kV and all?

MR. ECKHOLT: It's actually located -- I have a site plan. I'll pull it up.

MR. RUETHER: This is Joe Ruether again. The 13.8 manhole is actually away from the river from

1 the plant. You got the river and then you have the
2 physical plant and then going in is where the manhole
3 is. It used to be the middle parking lot.
4 MR. ECKHOLT: The manhole is in this
5 location right here. It's an old parking lot that's
6 no longer used now.
7 One other thing to note with the manhole,
8 the bottom of the manhole is sand, so should any
9 water enter --
10 MEMBER STETKAR: It's an opportunity for
11 water to come in.
12 MR. ECKHOLT: But it also drains out very
13 readily both ways.
14 MEMBER STETKAR: If you say so.
15
16
17 MEMBER MAYNARD: I'm not sure that once
18 every two years -- I'd have to see the program to
19 know whether -- I mean, it could be getting wet deep
20 down and if you're just looking at it at a time it
21 may be down, but I also consider this probably more
22 of a current operating issue as much as a license
23 renewal issue that should get resolved as part of
24 this. The two year cycle doesn't really excite me as
25 far as an adequate inspection.

1 MEMBER STETKAR: Yes, and that is sort of
2 the reason why I brought it up because it is a
3 current operating issue.
4 On the other hand, there are a lot of
5 plants out there that have water in manholes that
6 don't have cable failures.
7 For this purpose, I would disregard
8 termination failures because it's obviously not an
9 environmental thing. It's a work process issue.
10 But I think inspections every four years,
11 every two years are scant. I'm also surprised you
12 only have one manhole that carries medium voltage,
13 important to safety cables. I have to do a little
14 research on that.
15 CHAIRMAN RAY: Okay?
16 MEMBER ABDEL-KHALIK: This program -- when
17 do you expect them to be completed?
18 MR. SKOYEN: The actual development of the
19 program?
20 MEMBER ABDEL-KHALIK: The actual testing.
21 MR. SKOYEN: Implementation of our
22 existing program -- you're referring to generic
23 letter program?
24 MEMBER ABDEL-KHALIK: You have a cable
25 testing program in place.

1 MR. SKOYEN: Correct.
2 MEMBER ABDEL-KHALIK: When do you expect
3 testing to be completed of all medium voltage cables?
4 MR. SKOYEN: Of all medium voltage cables?
5 The testing that's required by the program requires
6 that we determinate the cable at both ends, so those
7 will take place over a series of outages over the
8 next few years.
9 In terms of a -- pardon me?
10 MEMBER BONACA: Somewhere around four
11 years?
12 MEMBER ABDEL-KHALIK: It said four
13 outages, which carries you through the period of
14 extended operation. I'm just trying to find out why
15 that is acceptable.
16
17 MR. SKOYEN: I believe that would be two
18 outages on each unit.
19 MEMBER ABDEL-KHALIK: So when would that
20 end?
21 MR. SKOYEN: That would end approximately
22 four years or the less of four years --
23 MEMBER ABDEL-KHALIK: Which is right
24 before the period of extended operation.
25 MR. SKOYEN: Right, a little bit before

1 then.

2 MEMBER ABDEL-KHALIK: Okay, thank you.

3 MR. ECKHOLT: The commitment for the

4 license renewal aspect of this program is to be

5 completed by the PEO. Anything more on --?

6 CHAIRMAN RAY: No thanks.

7 MR. ECKHOLT: Okay, moving on to the SER

8 open items. We'll talk first about the PWR vessel

9 internals program.

10 The GALL anticipates a future program. It

11 anticipates that the program under development by

12 EPRI and MRP will be reviewed and approved by the NRC

13 and put in place.

14 Our original LRA was submitted with the

15 associated GALL statement submitting to implement the

16 program as approved by the NRC. As part of the

17 hearing process, a contention was raised on the

18 adequacy of just providing a commitment rather than a

19 detailed discussion of an internals program.

20 So in order to resolve that contention,

21 we've submitted a plant-specific vessel internals

22 program back in mid-May that was based on the EPRI

23 MRP-227 Rev 0 document that was submitted for NRC

24 review.

25 We did retain the commitment to update

1 the program based on whatever is finally approved by
2 the NRC.
3 Subsequent to us adding that to our LRA,
4 all the parties involved in the contention process
5 agreed that it resolved the issue and agreed to
6 dismiss the contention. The ASLB subsequently
7 dismissed the contention.
8 And then, as Brian noted, the NRC staff
9 review is still in progress on the submittal we made.
10 MEMBER SHACK: And this is basically an
11 inspection plan?
12 MR. ECKHOLT: Yes. Any other questions?
13 The second open item relates to scoping of the waste
14 gas decay tanks. SSCs are in-scope per part 54 in
15 part if they prevent or mitigate the consequences of
16 an accident which could result in off-site exposures
17 comparable to those referred to in 10 CFR 100.
18 The Prairie Island waste gas decay tanks
19 are classified as safety-related. However, we did not
20 initially bring them into scope because the off-site
21 exposure potential was not considered comparable. It
22 was not what we consider -- it didn't reach a 10
23 percent threshold.
24 The NRC reviewers took issue with that
25 interpretation and in the end, we agreed to re-

1 classify the waste gas decay tanks as in-scope and we
2 made a submittal that went in in early June bringing
3 those tanks into scope. Again, the NRC staff is
4 currently reviewing that submittal.
5 Then the third SER open item relates to
6 reviewing cavity leakage. Just a little bit of
7 background on the NRC review of this issue. The NRC
8 was briefed on this issue during the aging management
9 audit in the fall of 2008.
10 We also held a public meeting with the
11 NRC staff to give them more detailed information on
12 the issue and the actions we were taking. There were
13 a number of REIs that we responded to and there was
14 an NRC team that came on-site to do an audit of some
15 of our documentation as well.
16
17 We have responded to all the REIs. The
18 last response went in on June 24th of this year.
19 Again, the NRC review is still in progress.
20 We'll also provide some more detailed
21 information. Steve Skoyen will give us a little
22 background on the leakage, our containment
23 configuration, the leak locations, the leak paths,
24 our inspection results to date, the corrective
25 actions we're taking, and what we're looking at for

1 long term aging management as well as an evaluation
2 we've done on potential degradation. So with that,
3 I'll turn it over to Steve.
4 MR. SKOYEN: Thank you, Gene. Prairie
5 Island has experienced intermittent leakage
6 indications in both units since the late 1980's.
7 Approximately 1987 was the first documentation of a
8 problem.
9 The cumulative leak rate that we see from
10 the refueling cavity is approximately one to two
11 gallons per hour. It's most commonly seen in the ECCS
12 sump and then in the regenerative heat exchanger
13 room.
14 Sources has been determined to be
15 refueling cavity water, based upon the chemistry of
16 the water that accumulates in those two locations,
17 and the fact that the leakage indications typically
18 begin two to four days after the refueling cavity has
19 been flooded. They end approximately three days after
20 the cavity has been drained.
21 We've been successful with sealing
22 activities, either application of a strippable liner
23 or caulking, but our success has been inconsistent.
24 MR. BARTON: Let me ask a question. I've
25 seen that you've taken some corrective actions, but

1 this subsequent -- I assume when you do a strippable
2 coating prior to a refueling outage, do you do the
3 same spots all the time, but yet when you fill up for
4 that outage, do you still have leakage, which means
5 that you've got -- that the coating either failed or
6 you've still got leakage in other parts of the pool
7 that you haven't found.
8 MR. SKOYEN: We had some success with a
9 coating when it was applied properly and when we were
10 able to apply it to all areas, we were successful.
11 We were unsuccessful when it was applied
12 improperly. We saw the coating delaminating in the
13 application to the location that we believe are
14 leaking is not done properly, so we didn't -- the
15 process wasn't applied.
16 MR. BARTON: Were you ever successful in
17 an outage of sealing and not having any leakage in
18 that outage of did you always have leakage?
19 MR. SKOYEN: We were successful with the
20 application of the strippable coating approximately
21 50 percent of the time.
22 We were also successful when we caught
23 around the base plates and underneath the support
24 stand nuts approximately 50 percent of the time.
25 MR. WADLEY: Sufficiency of application is

--

MR. BARTON: You think it's an application, but if you had applied it properly you think you would have stopped it?

MR. WADLEY: Yes.

MR. BARTON: So you think you know where the leaks are?

MR. WADLEY: Correct, yes.

MR. ECKHOLT: We'll get into that here.

MR. BARTON: Okay.

MR. WADLEY: We demonstrated a correlation during a --

MR. BARTON: I just wondered whether we were chasing a ghost here or whether we're just having a problem fixing what's there. Okay.

MEMBER STETKAR: Well, you know if you've been successful part of the time and unsuccessful other parts of the time, you may want to consider another sealing method or do additional work and make sure the sealing method you use actually performs its function.

MR. ECKHOLT: We'll get into --

MR. SKOYEN: Well get into the action we plan to take.

Following the most recent refueling

1 outage in which our sealing method was not
2 successful, we determined that we needed to perform a
3 root cause evaluation on this issue. So that was
4 performed earlier this year.
5 As a result of that root cause
6 evaluation, we determined the sources of leakage to
7 be the embedment plates for the reactor internal
8 stands which are in the lower cavity and then the rod
9 control cluster change fixture supports which are in
10 the transport.
11 We determined that based upon the
12 correlation between when we are successful in
13 mitigating a leakage and when we were not, when we
14 could relate that back to problems during application
15 of the coating or application of the caulking.
16 Some background on our containment vessel
17 because it may be different from others you've seen -
18 - bring up the drawing.
19 Actually, if you turn to the last slide
20 in your presentation -- we did include a figure so we
21 can look at that. The containment pressure vessel
22 itself has an inch and a half thick bottom head, an
23 inch and a half thick shell, and the top head is 3/4
24 of an inch thick.
25 At the ECCS sump location, as well as

other penetrations, the thickness of the shell is 3/4 of an inch for reinforcement.

Material is an SA 51670 low temperature carbon steel.

The lower head, as you can see in the drawing, is fully encased in concrete on both sides. The remainder of the containment pressure vessel -- and there's a five foot annular gap between the containment vessel itself and the one in the leakage -- reinforce the concrete shield building. That allows us access to the vast majority of the containment pressure vessel itself.

I'd also like to point out on this slide, because we'll be talking about this later, the regenerative heat exchanger room. That lies right below our lower cavity and we have seen evidence of leakage there.

The fuel transfer tube and canal, as well as the upper refueling cavity. This is the reactor head.

At this time, I would also like to point out our sump charley, which is below the reactor vessel. We'll also be referring to that later. At that particular point, the thickness of the concrete is approximately 16 to 18 inches.

MEMBER ABDEL-KHALIK: So how would a leak make its way all the way to the sump there?

MR. SKOYEN: Actually, that is not the sump where we typically see the leak. We'll get to that in the next section.

MEMBER ABDEL-KHALIK: Okay.

MR. SKOYEN: Okay, the top view, you'll notice our ECCS sump -- that's at an elevation of 693.7. 693 and 7 inches. We didn't see that in the prior view because it was in a different plane. That's typically where the leakage would show up, in that particular location.

MEMBER STETKAR: So that's 693.7, so that's --

MR. ECKHOLT: We've just got another --

MEMBER STETKAR: Do you have another elevation that shows that?

MR. ECKHOLT: It's down in this location. The refueling cavity bottom is up here.

MR. SKOYEN: Can we go back to the cut-away drawing again, the elevation drawing. It may b easier to see here.

Although it's not shown on this picture relative to the other elevations, you can get an idea of approximately where that is located.

1 MR. ECKHOLT: That's basically down --
2 MR. SKOYEN: 693 elevation.
3 MEMBER MAYNARD: That's at the bottom of
4 that thing over on the right.
5 MEMBER ARMIJO: You have a slide 51, page
6 51, that's shows the ECCS sump. Is that one of those
7 locations that where you're finding the water?
8 MR. SKOYEN: That's correct. That's the
9 location that we're referring to on this particular
10 slide, in the center -- the cut-away drawing in that
11 particular location.
12 And you'll note that the grout between
13 the containment pressure vessel itself and the sump
14 is relatively thin in that particular area.
15 MR. ECKHOLT: This area here.
16 MEMBER ARMIJO: This looks thicker there
17 also, for some reason.
18 MR. SKOYEN: Correct. That's a penetration
19 so it has some reinforcements. That's approximately
20 three and a half inches. Next slide, Gene.
21 The actual leak locations themselves, the
22 typical reactor vessel internals support stand is in
23 the left and the typical RCC change fixture support
24 stand is on the right. There are eight internal
25 support stands and we have three NRCC change fixture

supports.

The leakage, we believe to be flowing the threads down past the nut. Once past the nut, there's a seal weld -- this is the RCC change fixture -- seal weld that was installed when this was originally put in.

That ground flush, we believe that there's a leakage path to that location that's allowing the refueling cavity water then to pass completely through the stud and then come out underneath the embedment plate.

Similar arrangement on the internal support stands.

MR. ECKHOLT: Maybe you can describe the caulking we've done on these in the past?

MR. SKOYEN: Yes. Past actions that we've taken, most recently was caulking and we would remove the nuts from the top of the base plate, underneath those nuts to prevent the leakage from going past the threads. Then between the base plate and the embedment plate, we would try to caulk there.

If you look at this and go back to the prior slide, Gene, that orange material that you see there is the caulking. That is applied and removed

1 each outage.

2 MEMBER STETKAR: Is that borated water?

3 MR. SKOYEN: That's correct.

4 MEMBER STETKAR: What are the materials

5 for the nuts, the studs, face plates?

6 MR. SKOYEN: It's all like a pore

7 stainless.

8 MEMBER STETKAR: Okay. Have you seen

9 corrosion of any sort that is significant that would

10 change the strength of the structure?

11 MR. SKOYEN: In the refueling cavity

12 itself?

13 MEMBER STETKAR: Of these supports.

14 MR. SKOYEN: No, we have not. No corrosion

15 and no reports of any deficiencies related to the

16 integrity of the supports for the studs.

17 Okay, next slide, Gene. Do you want to go

18 to the cut-away drawing? We are referring to slide

19 number 33 when we talk about the path the leakage

20 takes.

21 Once the leakage is underneath the

22 refueling cavity and liner -- or seeped through -- it

23 will travel through construction joints between the

24 floor of the transfer pit and the wall behind the

25 transfer tube. Once it's behind the wall in the

transfer tube, it can travel horizontally and circumferentially around the containment, which is between that space between the concrete and the shell.

Once it gets into the lower elevation of containment, we see that come through the ECCS sump. As we mentioned earlier, grout is relatively thin in that area and that's why we believe it shows up in that particular location.

The leak rate that we see in this particular location is approximately one gallon per hour -- up to one gallon per hour. It has been the last -- depending on our success with mitigation.

We have also seen evidence of leakage in our regenerative heat exchanger room, which is directly below the lower refueling cavity. That particular leakage will travel and once it's underneath the liner. It can follow hairline cracks in the concrete and then seep through the sealing in the walls in that particular room.

MEMBER ARMIJO: Do you have some sort of a sump pump in that area, that 851 -- slide 851.

MR. SKOYEN: In the ECCS sump? Yes, there is not an existing pump in there, but during

1 refueling outages, we will pump that occasionally if
2 that particular outage has some leakage.
3 MEMBER STETKAR: A portable pump?
4 MR. SKOYEN: Yes, correct.
5 MEMBER SHACK: I thought you said before
6 you didn't see leakage into sump C.
7 MR. SKOYEN: Sump Charley is underneath
8 the reactor vessel. What we're talking about here is
9 the ECCS sump.
10 MEMBER SHACK: Do you see leakage in both
11 of the sumps?
12 MR. SKOYEN: No. We see the -- commonly,
13 we see the leakage in the ECCS sump. Sump Charley, if
14 there's leakage in that particular area, it is more
15 than likely due to leakage through the cavity seal.
16 CHAIRMAN RAY: I was going to say how the
17 heck are you going to separate that?
18 MEMBER STETKAR: Well, you can tell just
19 be -- well, you have insulation on the reactor vessel
20 so you can't see.
21 MR. SKOYEN: Correct.
22 MEMBER STETKAR: The pathway is going to
23 be between the vessel.
24 MR. DOWNING: I would like just to add one
25 clarification if I may, My name is Tom Downing. I'm

1 at Prairie Island site.

2 There is evidence of leakage in the sump

3 under the reactor vessel only in that there's a stain

4 in the wall that originates from a construction joint

5 and comes down the wall. Actual leakage has never

6 been witnessed because that sump is not accessible

7 when the pool is flooded.

8 You can also see on the diagram there

9 that the one horizontal line coming over to the sump

10 directly under the reactor vessel is just to indicate

11 that there is a stain on the wall there.

12 MR. SKOYEN: Any additional questions

13 regarding leakage?

14 CHAIRMAN RAY: Well, you demonstrated or

15 illustrated I should say a hypothetical path. It's

16 one that I assume could exist. It's not a unique path

17 from the site of the leakage to the sump of interest.

18 MR. SKOYEN: Correct. Regarding

19 inspections that we've done related to the leakage,

20 we have poured ultrasonic examinations and visual

21 examinations of the containment vessel.

22 In particular, in the ECCS sump, we have

23 removed the grout at that location more than once and

24 performed inspections there.

25 All readings have been above nominal. All

1 readings have been consistent, which should indicate
2 no corrosion in that particular area. The visual
3 inspection confirmed that as well.
4 The annulus area, we have also inspected
5 there because as we've mentioned, once the refueling
6 cavity leakage would get past underneath the liner,
7 once it gets to the transfer tube, it can go down
8 along the wall. So we have inspected from the annulus
9 from external to the pressure vessel looking back in
10 to determine if there's been any corrosion on the
11 interior side. We've seen none on the exterior.
12 At that location, we have not identified
13 any corrosion either. Again, all of our wall
14 thickness measurements are above nominal in that
15 location and they're also consistent.
16 MEMBER STETKAR: Now, I take it every
17 place where leakage ends up is in some kind of a
18 concrete vault with the liner, metallic liner?
19 MR. SKOYEN: No, that's not correct.
20 MEMBER STETKAR: What's not correct about
21 it? No liner?
22 MR. SKOYEN: No liner.
23 MEMBER STETKAR: Okay, so you're flat up
24 against the concrete?
25 MR. SKOYEN: Correct.

1 MR. ECKHOLT: Yes. There's no steel liner
2 on the surface --
3 MR. BARTON: But ECCS sump.
4 MEMBER STETKAR: Have you found any
5 deterioration of the concrete or the coating or do
6 you usually have some kind of a coating here?
7 MR. SKOYEN: No. We see the leakage
8 seeping through the coating. We have not seen that
9 the coating has deteriorated in that location and we
10 have no evidence of concrete degradation either.
11 MEMBER STETKAR: Have you inspected the
12 areas for cracks that would take you far enough into
13 it rebar?
14 MR. SKOYEN: We have looked at cracks. The
15 cracks that we have looked at as part of our
16 structures monitoring program could be characterized
17 as hairline cracks. We have no significant cracking.
18 MEMBER STETKAR: You have no way of really
19 determining what condition of rebars?
20 MR. SKOYEN: Not directly, that's correct.
21 CHAIRMAN RAY: Well, now, aren't you
22 planning to excavate --
23 MR. SKOYEN: Yes.
24 CHAIRMAN RAY: Let me hear you out. Tell
25 me about -- what's the plan?

1 MR. SKOYEN: Yes, we'll be covering that a
2 little bit later.
3 CHAIRMAN RAY: All right.
4 MEMBER ABDEL-KHALIK: Now, when you say
5 the leak rate is one to two gallons per hour, this is
6 your measured leak, right?
7 MR. SKOYEN: That's correct.
8 MEMBER ABDEL-KHALIK: Do you have any idea
9 what your actual leak rate is? How would you go about
10 estimating that?
11 MR. SKOYEN: That is probably the most
12 direct way to measure it. Tom, if you have something
13 to add?
14 MR. DOWNING: Yes. My name is Tom Downing.
15 When you first -- well, I shouldn't say
16 when you first start experiencing -- back in `98, `99
17 time-frame when we experienced leakage, we hung
18 plastic sheeting up in the leak areas and drained it
19 into a bucket, five gallon bucket, and timed it.
20 At that time, the leakage in the region
21 room was estimated at 1.25 gallons per hour.
22 Similarly, we estimated the amount of leakage into
23 the ECCS sump at .5 gallons per hour.
24 So the sum of total leakage and
25 containment generally ranges between one and two

gallons per hour.

MEMBER ABDEL-KHALIK: Well, but my question was aimed at finding out are there any other locations where water could actually be accumulating?

MR. DOWNING: It's a potential that water is accumulating on the bottom head of the reactor vessel itself. There's really no way to know for sure exactly where the water travels or where water resides.

I would expect that the leakage either comes through the construction joint or follows the transfer tube directly, comes down the wall, comes around containment, and could potentially fill the interface between the interior concrete in the inside diameter of the reactor vessel bottom head.

MEMBER ABDEL-KHALIK: If that were the case, what would be the consequences?

MR. SKOYEN: Of the actual water at that location?

MEMBER ABDEL-KHALIK: Right.

MR. SKOYEN: We'll also be getting into that as part of the presentation a little bit later when we talk about evaluation of potential degradation.

MEMBER ABDEL-KHALIK: Okay.

1 CHAIRMAN RAY: We can run a little over,
2 but we've got 20 minutes.
3 MR. SKOYEN: All right. We plan to prepare
4 to permanently eliminate the leakage during our next
5 refueling outage on each unit.
6 MR. BARTON: Let me ask you. This thing
7 has gone on for so long. Why now do you decide you're
8 going to fix it?
9 MR. SKOYEN: Well, we had, as I mentioned
10 earlier, we had tried a number of sealing methods.
11 Given the inconsistency of performance, we determined
12 that we could no longer rely on that to eliminate
13 this leakage.
14 We were successful during our unit 1
15 outage in the spring of 2008, the sealing on that
16 unit.
17 We had less success in the fall. We
18 didn't see leakage for approximately 10 days, but
19 after 10 days, we did see leakage into our ECCS.
20 MR. ECKHOLT: We had some difficulty. We
21 couldn't remove the nuts and get the caulking under
22 them for that outage so --
23 MR. SKOYEN: That is a concern as well
24 because that's a stainless to stainless interface.
25 There is a concern for GALLing and repeated removal

1 and installation in that area.

2 What we're performing now is a permanent

3 repair so that we don't have to do that anymore.

4 MR. WADLEY: It's not acceptable to

5 continue to have this leak. Too many unknowns.

6 CHAIRMAN RAY: Mike, I must say that that

7 was hard to figure out from a lot of the rhetoric

8 that was submitted here -- that it wasn't acceptable.

9 I'm glad to hear you say that.

10 MR. BARTON: Yes, thank you.

11 MR. SKOYEN: The repair method that we're

12 going to employ is shown on this particular slide. As

13 you can see, on the right hand side of the slide is

14 the existing configuration with an open nut.

15 We will be installing blind nuts, as

16 noted on the lefthand side in the particular

17 locations where it's attainable to surface area and

18 the thread engagement.

19 Then putting a seal weld all the way

20 around the location, that will eliminate the leak

21 path that could occur there.

22 We'll also be putting a seal weld between

23 the base plate and the embedment plate to eliminate

24 that leak path.

25 We believe that by doing this, we will

1 permanently eliminate the leakage that occurs from
2 both the internal stands and the RCC change fixture
3 support stands.
4 MEMBER ARMIJO: There was no seal weld
5 there initially?
6 MR. BARTON: There was initially. They
7 said down here, they think that --
8
9 MEMBER ARMIJO: Yes, just around the
10 threads.
11 MR. SKOYEN: Yes. Just around the threads.
12 So we believe this to be a much more
13 robust design than was the original. It also allows
14 us to inspect these welds going forward and identify
15 any concerns with those in repair.
16 It also, from a dose consideration,
17 perspective, is we receive far less dose employing
18 this method of repair than going back to the original
19 drawing.
20 So for a number of reasons, we believe
21 this is the correct method for repair.
22 CHAIRMAN RAY: I take for granted that
23 there aren't any leak chases on the seams of the
24 cavity and so on.
25 MR. SKOYEN: That's correct, right.

MEMBER ABDEL-KHALIK: Have you done a simple calculation to -- if you have a certain water level in the refuelings, storage, how big a crack in terms of equivalent diameter would you have to have to have to give you water flow of one to two gallons per hour all the way from that location to that sump?

MR. SKOYEN: I don't know that -- we haven't done a calculation on a crack size. We do know that it would be somewhere between 165 and 350 drips per minute.

MEMBER ABDEL-KHALIK: No, I mean, size of the hole.

MR. SKOYEN: I don't believe we've done that. Tom?

MR. DOWNING: Yes. Again, my name is Tom Downing. We've never actually calculated what size hole would be needed to generate a one to two gallon per hour leak, but intuitively it would seem that it would be pretty small.

MEMBER ABDEL-KHALIK: It has to travel a very, very long distance.

MR. DOWNING: Yes, it does travel a torturous path. Again, leakage manifests itself in ECCS sump anywhere from three to ten days after the pool is flooded to a level of -- is pool at 35 feet,

above 35 feet of head.

MEMBER ABDEL-KHALIK: But that would be a relatively simple calculation to do just to get an idea how big a hole is that.

MR. WADLEY: We'll take a look at that. We'll get back to you.

CHAIRMAN RAY: You guys are persuaded that you know where the leakage is coming from. I would just observe the seam leakage in these liners is not uncommon.

MR. SKOYEN: We have inspected for seam leakage in the past, both through vacuum box testing, POINT testing. We will be doing some additional seam leakage testing this upcoming outage.

MEMBER SHACK: Well, I think that was the point of Said's thing is to see whether that hole size is really consistent with what you think is the mechanism, a small crack in that seal weld or a bigger hole which might indicate --

MR. SKOYEN: We have other problems. Okay, thank you.

CHAIRMAN RAY: But the fact is you do know that these things are leaking? There's no doubt about that.

MR. SKOYEN: That's correct.

1 MEMBER ARMIJO: And you had good success
2 when you seal them, although it's unreliable when you
3 seal them with coatings or caulking or whatever.
4 MR. SKOYEN: That's correct.
5 MEMBER ARMIJO: So there may be other
6 leaks, but these you know for sure.
7 MR. WADLEY: We have high confidence that
8 this is the most probable location of the leak. The
9 repairs that we'll perform then will validate whether
10 or not those -- our assumptions and our confidence
11 was truly supported in this location.
12 CHAIRMAN RAY: What's your experience on
13 the spent fuel pool?
14 MR. WADLEY: No leakage at all that I can
15 recall. Does anyone else have a --?
16 CHAIRMAN RAY: We may return to that if we
17 have time, but you're focused on this now so lets
18 continue.
19 MR. WADLEY: Yes.
20 MR. SKOYEN: Okay, we're going to enhance
21 our monitoring of the tank pressure vessel by
22 removing concrete from our sump Charley, which we
23 referred to before. That's the sump below the reactor
24 vessel. It's a relatively --
25 CHAIRMAN RAY: Jack, this is the

1 excavation I was talking about that he's referring to
2 here.
3 MR. SKOYEN: We'll be removing concrete at
4 that location because it's the lowest -- as close as
5 we get to the lowest point in containment.
6 With respect to the head, there was
7 stagnant water there. That would be the most probable
8 location.
9 Again, that's 16 to 18 inches of concrete
10 we'll have to remove. Once that's removed, we'll be
11 performing both a visual examination and an
12 ultrasonic examination to assess the containment
13 pressure vessel.
14 If there's any water observed in that
15 particular area, that will be removed. We'll be doing
16 this in the outages following the repair locations.
17 MEMBER STETKAR: I take it you don't
18 expect to find any water in there, right?
19 MR. SKOYEN: I don't know if I'd make that
20 statement. We'll talk about that a little bit later
21 as well.
22 We'll also be performing some additional
23 assessments. We will be performing a margin
24 assessment of the containment vessel concrete and
25 rebar, as well as evaluating the structural

1 requirements potential degradation around the fuel
2 transfer tube.
3 Long term aging management -- we are
4 going to be monitoring areas that previously
5 exhibited leakage for the next two outages after the
6 repairs. That is in our corrective action program.
7 We'll continue general monitoring for new
8 leakage using the structures monitoring program per
9 ASME section 11 IWE program for the remainder of the
10 plant life.
11 For any new issues that are identified,
12 we will be utilizing the corrective action program
13 for evaluation and application of additional
14 corrective actions.
15 We have performed evaluations of
16 potential degradation for the steel containment
17 vessel, the concrete, and the rebar.
18 With respect to the steel containment
19 vessel, as previously mentioned, we have not
20 identified any corrosion, nor have we identified any
21 wall thickness concerns. All of the readings we've
22 taken for wall thickness have been at or above
23 nominal. The water that would be done in that lower
24 elevation of containment would be essentially
25 stagnant. Oxygen would be consumed to preclude

1 continued corrosion.

2 The alkalinity from the concrete -- we've

3 demonstrated that that would elevate to a pH

4 sufficient to inhibit corrosion in those areas.

5 The containment vessel corrosion behind

6 the concrete in the areas wetted by the cavity

7 leakage, we would expect to be no more than 10 mils.

8 MEMBER ABDEL-KHALIK: Based on what?

9 MR. SKOYEN: That was based on evaluation

10 and the different factors that the time that the

11 refueling cavity actually leaks. It's very limited.

12 It's only during outages for approximately 15 days --

13 the buffering effect that you get from the concrete

14 and elevated pH.

15 MEMBER ARMIJO: This is 10 mils over the

16 whole life of this leakage?

17 MR. SKOYEN: That's correct.

18 MR. BARTON: How many years has this been

19 going on?

20 MR. SKOYEN: In performing our evaluation,

21 we assume the entire plant life, although there

22 wasn't evidence of it prior to 1987.

23 With respect to the concrete, long term

24 exposure to the acid can dissolve the calcium

25 hydroxide in the cement binder in the soluble

1 aggregate.

2 Dissolving the calcium hydroxide

3 neutralizes the acid if it's not refreshed, so if

4 it's not continually refreshed, that reaction would

5 stop.

6 The refueling cavity liner -- our

7 evaluation has concluded that there would be

8 negligible effect on the refueling cavity walls and

9 floor because those are all fortified feet thick with

10 the exception of one location which is adjacent to

11 the transfer tube. That evaluation of that area is

12 still ongoing.

13 At the containment vessel inside surface,

14 the water would essentially be stagnant so the acid

15 would be neutralized by the alkalinity in the

16 concrete, again having minimal effect. It's not

17 refreshed other than during refueling outages.

18 Cracks in the concrete -- essentially the

19 same situation. The water would be stagnant so the

20 acid would be neutralized by the alkaline in the

21 concrete there as well.

22 MR. BARTON: How long after refueling

23 outage do you think that the containment vessel

24 remains wet? That that area remains wet?

25 MR. SKOYEN: How long will the area remain

1 wet?

2 MR. BARTON: What do you think, yes, after

3 refueling outage and leakage stops, how long do you

4 think that area remains wet?

5 MR. SKOYEN: At the lowest elevation of

6 the containment vessel, potentially it could remain

7 wet indefinitely.

8 MEMBER SHACK: Is that how you calculated

9 your 10 mils? That indefinitely at some pH that you

10 assume from the concrete?

11 MR. SKOYEN: That's correct.

12 MEMBER SHACK: Okay.

13 MR. SKOYEN: With respect to the rebar,

14 there is some potential for the refueling cavity

15 leakage to reach re-bar in the cracks. Corrosion of

16 the wetted rebar would be inhibited, again, by the

17 alkalinity in the concrete promoting a protective

18 layer.

19 Qualitative assessment concluded that

20 there had been no significant signs of corrosion.

21 We've not seen any spalling, concrete cracking at

22 these locations. We've only had minor rustings that

23 have come through hairline cracks.

24 So the conclusion is that the corrosion

25 of the rebar, whether wetted periodically or

1 continuously, would be minimal.

2 CHAIRMAN RAY: Well, that's the rhetoric

3 that I was referring to. We don't need to go into it,

4 I don't think, if we're committed to stop the

5 leakage.

6 The main conclusion one draws from this

7 is it's not an alarming condition.

8 MR. SKOYEN: Right, correct.

9 CHAIRMAN RAY: But if we stop it, then we

10 don't need to draw the ultimate conclusions that

11 you're presenting here.

12 This is an awkward context for us to

13 address fundamental issues like you're dealing with

14 here. We'll talk to the staff about that later.

15 MR. SKOYEN: Right, I understand.

16 MEMBER ABDEL-KHALIK: But the statement

17 has been made that leakage is unacceptable.

18 MR. WADLEY: Yes, that's true. Correct.

19 MEMBER ABDEL-KHALIK: Yet this has been

20 going on for more than 20 years. Is this sort of a

21 new management attitude?

22 MR. WADLEY: Well, we've tried a number of

23 different methods to solve the problem. Performing

24 the root cause evaluation provided some additional

25 insights that we didn't -- we tried to do a fix,

1 quick fix, with caulk and strippable material.
2 This approach is a more rigorous approach
3 to a deeper understanding of what we're dealing with
4 so I think we have a better solution.
5 It's never been acceptable, but we've
6 never spent the time and the effort to get to the
7 details. We didn't come up with a proper solution.
8 MEMBER ARMIJO: I just had a quick
9 question. When you excavate under that sump C, now
10 that won't be the lowest point on your containment
11 vessel. Is that a concern, you know, that you're
12 going to look for evidence of water or corrosion
13 damage, but that's still -- I don't know -- maybe a
14 foot or two higher than the bottom. I don't know. The
15 low point of the vessel seems to be -- you won't ever
16 see that.
17 MR. SKOYEN: Tom, do you know the
18 difference between exact elevation?
19 MR. DOWNING: Yes. If I'm understanding
20 your -- again, my name is Tom Downing from Prairie
21 Island.
22 If I understand your question, you're
23 asking about the location of the excavation and it's
24 not bottom, dead center.
25 MEMBER ARMIJO: Yes.

1 MR. DOWNING: That's true and I would
2 agree that in an ideal world, it would be nice to be
3 able to excavate bottom, dead center because if water
4 had pooled there, that you would expect it to be.
5 It's just not really physically possible
6 in that the concrete is so thick there. It gets three
7 to four feet thick and even trying to excavate
8 through 16 to 18 inches of concrete with a mat of
9 steel at the top and then a double mat towards the
10 bottom would be very difficult.
11 MEMBER ARMIJO: No. I'm just -- I agree
12 with that and I wouldn't expect a pool of water
13 there. I just -- if it's spreading out and it's
14 wetted, I just wondered how many inches difference
15 there is between the dead center bottom and where
16 you're excavating.
17 MR. DOWNING: My recollection, from
18 looking at past drawings and trying to determine how
19 thick that concrete is, is that it's approximately
20 eight feet from bottom, dead center where we're going
21 to be excavating.
22 MR. ECKHOLT: What's the difference in
23 elevation, Tom?
24 MR. DOWNING: Yes, the difference in
25 elevation -- again, this is just pure -- my

1 recollection. I think it was in the realm of about a
2 foot and a half.
3 It's the 105 foot containment and then it
4 comes up as an ellipse so if you assume it's a
5 perfect ellipse, you can kind of figure that out.
6 MEMBER ABDEL-KHALIK: And the purpose of
7 this is to confirm that your 10 mil calculation is
8 correct?
9 MR. SKOYEN: That's correct. To assess at
10 that particular location, ensure that our centers are
11 correct, as well as provides us an opportunity that
12 if any water has pooled there, to evacuate that
13 water.
14 MEMBER ABDEL-KHALIK: Do you know the
15 thickness of the containment anywhere to within 10
16 mil accuracy?
17 MR. SKOYEN: We have performed containment
18 vessel inspections as we mentioned previously, both
19 from the annulus in the transfer tube area and at the
20 ECCS sump. Within 10 mils of accuracy is what you're
21 referring to?
22 MEMBER ABDEL-KHALIK: Right. Anywhere.
23 MR. SKOYEN: We know the nominal plate
24 thickness that was delivered so we have a fairly
25 strong understanding of what the thickness will be.

1 MR. ECKHOLT: I think the UT measurements
2 have been pretty uniform.
3 MR. SKOYEN: They've been fairly
4 consistent uniform.
5 CHAIRMAN RAY: Well, the excavation isn't
6 intended to verify the 10 mils, I don't think.
7 MEMBER SHACK: But you don't want to see
8 significant corrosion there because then it raises
9 Sam's question. Exactly how much corrosion is
10 significant may be argued but --
11 MEMBER ABDEL-KHALIK: But the presentation
12 earlier indicated that this analysis led you to the
13 10 mil estimate was done in a very conservative way.
14 MR. SKOYEN: That's correct.
15 MEMBER ABDEL-KHALIK: So in a sense, by
16 doing this, you're trying to confirm that your
17 analysis was indeed conservative, that indeed that
18 reduction and thickness, if any, does not exceed the
19 10 mil. The question is, how can you tell?
20 MR. SKOYEN: We would have a pretty good -
21 - from the surface examination, we would also have an
22 idea if there had been any reduction, evidence of any
23 corrosion.
24 MEMBER ABDEL-KHALIK: Okay.
25 CHAIRMAN RAY: You also had some

1 experiments done by your consultants, I believe, and
2 those ideal experiments showed it was very low. I
3 just think 10 mils is a very small number. I would
4 have put more windage on that.
5 MR. WADLEY: And I appreciate the question
6 and the comment.
7 MEMBER MAYNARD: I understand that the
8 conclusion on the significance here. I'm just not
9 sure how long that's valid. The concrete kind of
10 neutralizing the boric acid -- you do have a chemical
11 process going on and I don't know how long that can
12 go on without starting to degrade the concrete or the
13 rebar.
14 At some point, you lose the ability to
15 continue to neutralize it. I don't know if that's
16 1000 years or if's that's five years. I don't have a
17 feel for that, but I'm kind of curious as to how long
18 those conclusions are good for.
19 MR. DOWNING: Hi. This is Tom Downing
20 again. The 10 mils was based on 36 years of operation
21 to date. Again, we have not see any corrosion.
22 We do not believe there's any corrosion,
23 but we would expect a similar evaluation for 36 years
24 forward so that a total over 72 years is potentially
25 20 mils.

1 CHAIRMAN RAY: That's what I was referring
2 to, Otto, and I mentioned this is an awkward place to
3 try and deal with fundamental physics of something
4 like what's the threat of borated water in the wrong
5 place for a long time, which is not to say that we
6 shouldn't have some way of dealing with that.
7 It's just that I'm not sure that all the
8 work the applicant has done here, we can conclude is
9 persuasive. The inspection of the
10 containment itself by this excavation was what I felt
11 was most valuable and the commitment now heard to
12 arrest the continued leakage. Go ahead.
13 MR. SKOYEN: Okay. Just in conclusion, the
14 expected containment vessel corrosion behind the
15 concrete in the wetted areas, we would expect to be
16 minimal, as we've been discussing.
17 We would also expect the concrete
18 degradation and any associated rebar corrosion not to
19 have had a significant effect on the reinforced
20 concrete that has been wetted in a leakage.
21 CHAIRMAN RAY: Okay, we're almost on time.
22 MR. ECKHOLT: Almost, just a final
23 summary.
24 The LRA was developed by an experienced
25 team. It conforms to the regulatory requirements and

1 follows industry guidance.

2 Prairie Island will be prepared to manage

3 aging during the period of extended operation.

4 CHAIRMAN RAY: Would you put up your back-

5 up slide 49, please? I want to make sure that members

6 still have the list here. We've read about many of

7 the items that are accepted here.

8 I don't recall reading about the steam

9 generator tube integrity program exception. Can you

10 comment on that?

11 MR. ECKHOLT: Phil, can you touch base on

12 that?

13 MR. LINDBERG: Excuse me. This is Phil

14 Lindberg, Xcel.

15 The exception to the steam generator tube

16 integrity program falls in the category of using a

17 later revision of an industry standard then what's

18 recommended in GALL.

19 I believe it's NEI 97-06 standard. I

20 believe we used Rev 2 where GALL recommends Rev 1, so

21 that's the exception.

22 CHAIRMAN RAY: That's why I didn't read

23 about it, I guess. All right, other questions of the

24 applicant.

25 MR. BARTON: I got -- there's a

1 description in the LRA on the stem generator system.
2 You mentioned unit 1 steam generators have flow-
3 limiting devices, steam nozzle for main steam line
4 break limits steam flow, but on the second unit, you
5 don't mention anything about the flow limiting
6 devices in the case of a main steamline break. You do
7 have them?
8 MR. ECKHOLT: Yes, they're intervaled in
9 the main steam line. Richard, can you --?
10 MR. PEARSON: This is Richard Pearson. The
11 flow limiting devices in the steam nozzle exist only
12 on the unit 1 replacement steam generators.
13 For unit 2, there is no flow limiting
14 orifice, so the break at the top of the steam
15 generator sees the full opening of the steam outlet
16 nozzle.
17 MR. BARTON: So limiting the flow limiting
18 device is somewhere in the steam line through that?
19 MR. PEARSON: Yes, just downstream of the
20 elbow at the top -- well, there is a flow-limiting
21 device. It's the flow orifice and that does limit
22 flow for the breaks downstream of the flow element.
23 MR. BARTON: Okay, I was just wondering
24 why you described the unit 1 was and unit 2, you
25 didn't --

1 MR. PEARSON: Because it's part of the new
2 steam generator.
3 MR. BARTON: I got you, thank you.
4 CHAIRMAN RAY: Speaking of steam
5 generators, you said unit 2 replacement is planned,
6 Mike.
7 MR. WADLEY: 2013.
8 CHAIRMAN RAY: 2013. Any other questions?
9 We will take a 15 minute break and return at 10:25.
10 (Whereupon, the hearing went off the
11 record at 10:07 a.m. and resumed at 10:23 a.m.)
12 NRC PRESENTATION
13 CHAIRMAN RAY: Back to order, please. We
14 will now hear the NRC staff presentation on Prairie
15 Island. Mr. Plasse?
16 MR. PLASSE: Yes, good morning. My name is
17 Rick Plasse. I am the project manager for Prairie
18 Island's license renewal application.
19 For today's presentation, we'll be
20 discussing the results of the staff safety review of
21 the application.
22 With me, to my right is the lead
23 inspector from region 3, Dr. Stuart Sheldon. He led
24 and conducted the regional inspection in January.
25 Stuart will be presenting the results of that

1 inspection.

2 Seated in the audience are various

3 members of the NRC staff that participated in the

4 reviews. Results are contained in the SER with open

5 items. They're here to assist and answer any

6 questions that may arise.

7 For today's presentation, we'll start

8 with a brief overview of the application and then a

9 discussion on section 2, scoping and screening

10 results.

11 Then I'll turn it over to Stu to address

12 the regional inspection, followed by a review of

13 section 3, aging management program and aging

14 management review results, and then section 4, TLAA

15 discussion.

16 The applicant discussed the open items in

17 detail. Brian had mentioned staff is continuing to

18 make progress on the open items. Some of it was due

19 to timing of some of the recent information provided

20 by the applicant.

21 I will provide a snapshot of the status

22 of those items at the applicable portions and

23 sections where we have a discussion on those items.

24 Next slide overview, I think the

25 applicant pretty much touched upon this. I don't want

1 to go back and rehash it unless someone wants me to.
2 I'll go to the next slide.
3 Overview -- the SER with open items was
4 issued June 4. There were the three open items as
5 discussed in detail, which we'll touch upon.
6 There were 168 REIs that were issued as
7 the staff went through its review process. There's 36
8 commitments to each unit. There's no unit-specific
9 commitments. They're all pretty much applicable to
10 both units.
11 As you probably noticed, I believe
12 there's more numbers. In the actual commitment list,
13 there was a couple of items which were updated that
14 were in use and there were several environmental
15 commitments that are in the record, in the commitment
16 list. But as far as the safety review, there's 36
17 commitments for each unit.
18 This slide just gives a list of the
19 activities that the staff and the region undertook
20 going through the review. We have the scoping and
21 screening methodology, which was in August of `08. We
22 have the aging management program documents, which
23 was September of `08. The regional inspection was in
24 January of `09. They had a formal exit in February of
25 `09.

1 Then we had a follow up audit on the
2 topic that we had and the technical discussion
3 earlier on reactive cavity leakage -- a one day audit
4 included one of our contractors and some of the NRC
5 tech staff.
6 A couple things I just wanted to note. As
7 the staff completed its review, had completed its
8 audit, we had a couple issues that we still needed
9 follow up. We had follow up REI's.
10 Also, we asked Stu, as part of his
11 review, to do some reviews in the field in January
12 and give a couple of examples of those. We talked in
13 detail about the medium voltage cables and the
14 manhole, the 13.8 kV safety related manhole.
15 When we did the audit in September, we
16 had the applicant open that manhole for our audit
17 team to inspect, so we inspected that in September.
18 We did not see any evidence of any water intrusion.
19 Also, in January, when the region was
20 there, they opened it again in the cold of the winter
21 of Minnesota and I believe they didn't see any
22 evidence also.
23 And one point I'd like to make, the
24 applicant mentioned in their slide on the medium
25 voltage cables, the recent failure they had with the

1 circ water. That is a non-safety related circ water
2 pump.
3 They are doing a root cause and there
4 will be an LAR and any extended condition, they'll
5 address in that LAR. It did result with a plant trip,
6 so that LAR is not due till 60 days following the
7 event. I believe the event was mid-May -- May 18 or
8 so.
9 With that, I'll go to the next slide.
10 MEMBER ABDEL-KHALIK: I know it was kind
11 of facetious, talking about the mid-winter in
12 Minnesota, but are there any submerged cables at all
13 on site? If they go through the winter and they go
14 through a freezing, thawing process, is that more
15 damaging than wetting and drying cycle?
16 MR. PLASSE: Anyone on the staff like to
17 respond to that one?
18 MR. LI: My name is Rui Li. I'm an
19 electrical engineer for the division of license
20 renewal.
21 I went to Prairie Island for an audit.
22 The cables in Prairie Island are direct buried, so
23 most of the cables are underground so you wouldn't be
24 able to see them.
25 Unlike most of the other plants that we

1 visited previously, there is only one manhole in this
2 plant.
3 MEMBER ABDEL-KHALIK: But my question
4 pertains to whether or not going through a freezing,
5 thawing process would be more damaging than wetting
6 and drying cycles?
7 MR. LI: I can get back to you on that,
8 but the point I'm trying to make is because these
9 cables at Prairie Island are on direct bury, it's
10 hard to observe that phenomenon in this place -- to
11 see if there's actually any ice underneath close to
12 the cables.
13 MEMBER ABDEL-KHALIK: Okay, thank you.
14 MR. MCCONNELL: This is Matthew McConnell
15 with the electrical engineering branch. I was
16 involved with the review of the Prairie Island
17 license renewal application.
18 To answer your question, the answer is I
19 don't know. I mean, it may be, It depends on the
20 chemical make up of the cables, the insulation and
21 type, and how long the cables would be exposed to
22 such condition.
23 My understanding is there's no evidence
24 of that type of activity going on at Prairie Island,
25 specifically with safety-related cables, so that

1 phenomenon really has not been addressed as far as
2 I'm aware.
3 MEMBER MAYNARD: I would suspect that most
4 of the cable would be below the freezing level there,
5 but there may be areas where --
6 MEMBER STETKAR: Yes.
7 MEMBER ABDEL-KHALIK: I mean, if they have
8 an inspection frequency of once every two years, it
9 is conceivable that you can accumulate enough water
10 in a pool box without detecting it. That water would
11 go through the water, freeze, and you would have a
12 cable that would undergo that kind of cycle.
13 MR. HOLIAN: This is Brian Holian. Just a
14 reminder for the committee, they did start off with a
15 quarterly inspection program and hopefully, taken
16 that through several quarters to check that very
17 theory.
18 But we were talking about the regional
19 aspects too on how well they follow through on their
20 commitments in that aspect and what those commitments
21 are based on. So I'm sure Dr. Sheldon will be able to
22 monitor. Hopefully, we've historically looked at did
23 they do enough to base their current inspection
24 frequency on.
25 I don't know if the region can talk to

1 that, but that is one time the staff will continue to
2 follow.
3 MEMBER ABDEL-KHALIK: Thank you.
4 MR. PLASSE: Okay, to go on to section 2
5 of the application. The applicant had mentioned that
6 they have now placed the radwaste decay tank in
7 scope.
8 By letter dated June 5, the applicant
9 included the waste gas decay tank within the scope of
10 license renewal. I said I'd give a status of the
11 ongoing activities.
12 The staff has completed its review of the
13 information provided by the applicant in the June 5
14 letter. I have been told by the staff that this item
15 can be closed and it will be documented in the final
16 SER.
17 With that, for section 2.1, the staff's
18 audit and review has been concluded that the
19 applicant's methodology is consistent with 54.4 for
20 in scope and 54.21(a)(1) for components subject to an
21 AMR.
22 Section 2.2, the staff found no omissions
23 of plant-level scoping systems and structures within
24 the scope of license renewal.
25 Section 2.3, mechanical systems -- the

1 staff completed a review of all systems. As
2 documented in the LRA, there were 37 mechanical
3 systems. 29 of the systems were a balance of plant
4 auxiliary and steam and power conversion systems.
5 I've got a sampling of some of the things
6 that were added to scope based on RAIs, plant floor
7 drains, flex connections, fire dampers, the waste
8 gasket K-tank. There were several stainless steel
9 flex connections in the heating system, diesel
10 generator and support systems.
11 Also, several boundary drawings were
12 noted where in-scope components were inadvertently
13 shown as out of scope on the drawings.
14 The components, however, typically were
15 already addressed in the LRA tables and therefore,
16 there were no LRA changes required. But the staff did
17 do a 100 percent and those RAIs are documented in the
18 SER where these applicable things were addressed.
19 Section 2.4 and 2.5, there were no
20 omissions of components within a scope of license
21 renewal. However, just as a note, during the
22 acceptance review, a discussion was made with the
23 applicant to understand the station black-out, which
24 the applicant kind of discussed in their
25 presentation, so there were some additional scope

adds in the switchyard, which the applicant addressed with the blue coloring in his slide, slide number 13.

With that, with the one open item, which the staff has since determined should be able to be closed, there were no omissions from the scope of license renewal in chapter 2.

At this time, I will turn the presentation over to Dr. Stuart Sheldon to discuss the regional inspection.

MR. BARTON: Rick, before you do that, I have a question. What's the current staff position on fuse holders? Has there been a change to GALL or something that I missed?

Since day one, I always thought fuse holders ought to be in scope for aging management programs. I keep beating a dead horse and was told to get off of it, and now I notice that in the applications I've been reviewing in the past year, people are now starting to have aging management programs for fuse holders. I don't understand what's going on.

MR. NGUYEN: This is Duc Nguyen from license renewal. Right now, we don't intend to change the GALL. It can sit with the regulation if the fuse folder at the assembly, then this is our scope of the

1 aging management review and depending on the plant-
2 specific, if the fuse holder will determine that they
3 have no aging effect, then they are not required in
4 the aging management program. This is a plant-
5 specific review.
6 MR. HOLIAN: This is Brian Holian. Just to
7 add on to that, I think you've seen some, maybe a
8 consistency over the years.
9 MR. BARTON: Yes.
10 MR. HOLIAN: Just as a reminder, that
11 plant lighting issue was a similar item in here.
12 License renewal, if the applicant puts it in scope,
13 we'll take it.
14 So that's a short answer. If they go
15 ahead and add it and it's part of their program and
16 they do it for simplicity or however they're
17 organized on site by discipline, we'll keep it in
18 scope. So that's what you're seeing here.
19 We are going through a GALL update now.
20 People are giving us comments. I know fuse holders is
21 one of those areas where historically it's been
22 thought should it be in scope, generically or not.
23 I think you heard from a reviewer that
24 our initial thought is that it still would not be
25 generically required to be in scope. We'll be able to

1 ferret that out this year as we finish our reviews of
2 that.
3 MR. BARTON: Thank you.
4 MR. SHELDON: Okay. I'm Stu Sheldon. I led
5 the license renewal inspection for the region at the
6 end of January of this year.
7 We had five experienced inspectors and
8 one newly qualified inspector as an observer on this
9 inspection.
10 We conduct the inspection under
11 inspection procedures 71002. Our focus is on scoping
12 and screening in aging management. We focus on (a)(2)
13 non-safety affecting safety systems. Our primary
14 means are physical walkdowns of systems to verify
15 their proper scoping and material condition.
16 We didn't identify any issues within the
17 scoping aspect of this. They're very conservative in
18 their scoping aspects. We did identify a few minor
19 material condition issues that they entered in their
20 corrective action program some corrosion that they
21 had not identified previously, some very small fuel
22 oil leaks, that type of thing.
23 We reviewed 24 of the 43 aging management
24 programs. This was conducted by reviewing their
25 program documentation. Our focus is on implementation

1 of the existing programs -- that they have an
2 existing program.
3 We also conducted walk downs of any
4 applicable systems -- if the program has an
5 applicable system, we conduct walkdowns then. We also
6 had the opportunity to accompany a unit 1 containment
7 entry. During this inspection, one of our -- ISI
8 inspector -- would have to go within the unit 1
9 containment and in the annulus area surrounding the -
10 -
11 MR. BARTON: What did you think of the
12 material condition inside containment?
13 MR. SHELDON: My report is that it's very
14 good. He did identify a leaking valve while he was in
15 there. I don't remember how many drops per minute it
16 was. It was a very small leak on a valve that --
17 that's what they were in there looking for.
18 CHAIRMAN RAY: Are you talking about a
19 packing leak?
20 MR. SHELDON: Right, packing leak.
21 MR. BARTON: That seems to be an issue. I
22 think you pointed out in your inspection report that
23 there have been historically a lot of packing leaks
24 and boric acid leaks, etcetera. Is that still an
25 ongoing issue or have they got their hands around

1 that?

2 MR. SHELDON: I don't remember --

3 MR. BARTON: That was in the audit report.

4 MR. SHELDON: Okay, I don't remember

5 making that kind of statement.

6 MR. BARTON: As far as, during your

7 inspection, did you look at that? Was that an issue?

8 MR. SHELDON: The ISI programs, we did

9 look at. We didn't find any issues with what they

10 were doing on their ISI.

11 MR. BARTON: I was just wondering whether

12 it was a training issue or whether it was still

13 ongoing.

14 It was in the audit report. It wasn't --

15 you guys probably -- you didn't point that out. Do

16 you know, Rick?

17

18 MR. PLASSE: Maybe some of the staff can

19 help me out. There were several RAIs and also

20 subsequent follow-up RAIs on the boric acid program.

21 MR. SHELDON: We did have some questions

22 associated with it on whether they were meeting the

23 code and leaving the boric acid on the components.

24 The results of that is no, they are not.

25 They are cleaning it off -- not necessarily during

1 that containment entry, but when the problem is
2 corrected, then the boric acid is cleaned off. There
3 were questions concerning that.
4 MR. PLASSE: My recollection is -- and the
5 applicant can, if I misrepresent something, they can
6 correct me -- is that they don't intend to leave
7 boric acid residue. They intend to clean it up as
8 soon as they can.
9 In some cases, there may be a dose case
10 or something where they make a decision to not get it
11 at that point and time, but they evaluate those
12 specific cases. Erach did those RAI's. He can
13 probably --
14 MR. PATEL: Hi. I'm Erach Patel. I'm with
15 the boric acid corrosion program.
16 Yes, you're right. They did have a
17 significant temporal valve packaging -- packing their
18 leakages on. They took a generic evaluation of that
19 and they reviewed live load packings and they
20 replaced a whole bunch of packings and they're trying
21 to make sure that they're going into the source of
22 the leakage itself to make sure that they prevent
23 those leakages.
24 So the corrective action program does
25 include a whole number of changes in the valve

1 packings.

2 MR. BARTON: Thank you.

3 MR. SHELDON: As part of our review, we

4 also interviewed plant personnel, specifically the

5 program owners who are going to be responsible for

6 implementing these programs to verify that they

7 understand what the program is and are involved with

8 the development.

9 Our operating experience review consisted

10 of reviewing system health reports, program results

11 from sampling programs, and we had access to the

12 corrective action program and did searches on our own

13 to look for anything that might be inconsistent with

14 what they said in their application. We did not

15 identify anything there.

16 One unique aspect of this is we had an

17 observer from the Prairie Island Indian community. On

18 our inspection, the tribal counsel president of the

19 Prairie Island Indian community came and observed as

20 we did our inspection.

21 Of the aging management programs that we

22 reviewed, this is a list of those which we identified

23 some sort of issue. Primarily, they were issues with

24 -- the program was stated as consistent with the GALL

25 and there were minor differences between what we read

as being required of the GALL and their procedures.

For example, with the external services monitoring program, the applicant agreed to improve their procedures to add specific acceptance criteria for degradation and include other types of degradation besides just corrosion, like blistering paint, flaking paint, that sort of thing.

MEMBER ABDEL-KHALIK: Back to the previous slide, is there a system health report for the refueling cavity?

MR. SHELDON: I couldn't tell you that. Does anybody over there -- can answer that?

MR. MCCALL: Yes. This is Scott McCall. I'm the system entering manager at Prairie Island.

There's not a specific system health report for refueling cavity. However, the spent fuel pool and its associated components -- there is a health report for that.

MEMBER ABDEL-KHALIK: What does the health report say -- system health report?

MR. MCCALL: I has -- have there been problems with the system.

MEMBER ABDEL-KHALIK: No. Specifically with regard to the leakage issue.

MR. MCCALL: For the refueling cavity? It

1 says that there has been problems in the past
2 regarding that. However, we have used, like we
3 previously talked about, means to arrest the leakage.
4 MEMBER ABDEL-KHALIK: And this problem has
5 been documented in the system health reports for the
6 past 20 years?
7 MR. MCCALL: No. System health reports
8 have really only been around the station in the last
9 five years, so five to six years. Don't quote me on
10 the exact date, but we've not had system health
11 reports since the late 80's.
12 MEMBER ABDEL-KHALIK: Thank you.
13 MR. BARTON: Stu, during the inspection on
14 the aging management review of the closed cooling
15 water system, your inspection team discovered that
16 the site hadn't taken some chemistry samples for
17 several years due to a shortage of chem techs -- this
18 is probably a question for the applicant.
19 They took the samples while you were
20 there, but my question is, if I hadn't taken a sample
21 for three years, do I really need the samples? And
22 have you corrected the chem tech issue, shortage of
23 chem techs?
24 I guess I'm addressing that to the
25 applicant. It was an item that you brought up in your

1 inspection report.

2 MR. ECKHOLT: This is Gene Eckholt. The

3 answer is yes, we need to take the samples. They

4 weren't stopped because there was a lack of need or a

5 perceived lack of need. There were some personnel

6 losses that we responded to probably inappropriately

7 by management, supervision at the time that suspended

8 the inspections. That has been remedied. They are

9 being taken again.

10 These are EPRI-required parameters we're

11 monitoring, They are to monitor the long-term

12 condition of the components, so they were never

13 stopped because of any perception that they weren't

14 important.

15 MR. BARTON: Since that's been corrected

16 and they are important and you are taking them as

17 scheduled. Is that what I'm hearing?

18 MR. ECKHOLT: That's correct.

19 MR. BARTON: Okay, thank you.

20 MR. SHELDON: Okay, any other questions

21 about the aging management program?

22 So the results of our inspection, which

23 we presented at our February 18 public exit meeting,

24 is that our results support a conclusion that there's

25 reasonable assurance that the effects of aging will

1 be adequately managed.

2 We found scoping of the non-safety

3 systems was acceptable and that documentation

4 supporting the application was auditable and

5 retrievable. I've listed the inspection report there.

6 The next few slides deal with current

7 licensee performance. All other performance

8 indicators are currently green. Both units are in the

9 regulatory response column, column 2, to do some

10 white inspection findings.

11 The fourth quarter 2008 finding was aux

12 feedwater pump failure because of a mispositioning of

13 a valve. The most recent white finding was a

14 transportation issue where the package arrived and

15 the survey showed that it had existed DOT limits.

16 CHAIRMAN RAY: Is the aux feed pump

17 turbine driven or motor driven?

18 MR. SHELDON: I don't know. I can't tell

19 you on this particular pump.

20 MR. PLASSE: I believe it's turbine

21 driven.

22 MR. SHELDON: But it was a discharge

23 pressure switch that was isolated to protect the pump

24 so that it doesn't build up discharge pressure.

25 MR. MCCALL: I can speak to that.

1 MR. SHELDON: Go ahead.

2 MR. MCCALL: Scott McCall again. It was a

3 turbine driven aux feedpump. Was that the question?

4 CHAIRMAN RAY: It was. I was interested in

5 then, but I've already found out what the

6 misalignment was.

7 MR. SHELDON: That's all I have.

8 MR. PLASSE: Any more questions? Okay,

9 we'll move on to section 3. This first slide shows

10 the break down of section 3. It's pretty standard

11 with license renewal applications.

12 I did not plan on covering each

13 subsection. I will touch again on the open items and

14 other information that may be of interest.

15 The first slide, that's just documents. I

16 think the applicant had a similar slide. He might

17 have broken them up a little differently.

18 This shows the breakdown of the aging

19 management programs. 14 were identified as new

20 programs. There's a total of 43 programs. 29 were

21 existing programs. 22 were identified as consistent

22 with GALL. 9 were identified as consistent with the

23 GALL with enhancements. 4 were ere identified with

24 exceptions to GALL. 6 were identified with exceptions

25 and enhancements to GALL. 2 were identified as plant-

1 specific programs. We have a bullet.
2 We mentioned earlier about the
3 contentions. One of them was they didn't have a 10
4 element program, nickel alloy, which they put a
5 plant-specific program March 27. Also, the vessel
6 internals program, which is an open item I'll get to
7 on a subsequent slide. With that, unless someone has
8 question on the break down of the AMPs, I'll move to
9 the next slide.
10 The vessel internals program, as Brian
11 had mentioned in his lead-in, is a timing issue. The
12 applicant put in on May 12 -- they voluntarily
13 submitted an amended program with the 10 elements.
14 The staff is in the process of reviewing that.
15 It also has additional AMR line items,
16 which the staff is going to have to digest the
17 document, so that is a task that's in place right
18 now. That will all be documented in a final SER.
19 I don't have anything negative with
20 respect to the letter at this point, other than that
21 the staff is still continuing to review that item.
22 MEMBER SHACK: Just on a generic question
23 -- that commitment for the PWR internals has been in
24 all the license renewal applications and the 24 month
25 clock is ticking.

When is the first guy up to the plate? When are we actually going to see a plan?

MR. CHERUVENKI: This is Ganesh Cheruvenki. I work with the MMR, vessel and technical branch.

The first one is being reviewed. They submitted the PWR AMP, vessel internals. We are currently reviewing it. We are also reviewing MRP-227, which was submitted in early January of this year.

So we are trying to issue the SC some time next year for both the reports, AMP and also MRP-227.

MEMBER SHACK: Okay.

MR. PLASSE: Next slide is relative to the ground water in the area of the plant. What the data shows is that the ground water in the area of the plant is not aggressive to rebar embedded in concrete. The data and the results are in a table.

The structure monitoring program includes sampling of the ground water and river water chemistries once every five years for the period of extended operation.

The bottom line is the ground water is non-aggressive to rebar in concrete.

1 The next item -- we went through at
2 length with the applicant on the status of this open
3 item with respect to the water seepage from the
4 reactor cavity.
5 I don't have anything to add at this
6 point, unless you have a specific question that you
7 would like to gear towards the staff on the issue.
8 MEMBER ABDEL-KHALIK: Have you done a sort
9 of a calculation that would show how much margin
10 there is, so if they were to do an inspection and
11 find that there's a quarter of an inch of wastage,
12 would they still have plenty of margin?
13 MR. SHEIKH: My name is Abdul Sheikh. I
14 work in the license renewal branch. So far, we
15 haven't done any calculations on this issue.
16 MEMBER ABDEL-KHALIK: Wouldn't it be a
17 reasonable thing for the staff to do?
18 MR. SHEIKH: Are you talking about the
19 liner?
20 MEMBER ABDEL-KHALIK: Right. We're talking
21 about 10 mils. What if it was 100 mils. What
22 difference does it make?
23 MR. SHEIKH: We looked at the report,
24 which the licensee as applicant has produced and
25 there's not too much margin in their calculations. So

1 if it is, say 100 mils or 200 mils, it won't satisfy
2 the code requirements. This is according to the
3 licensing department.
4 MEMBER ABDEL-KHALIK: Let me just try to
5 understand what you just said. By reviewing the
6 analysis of record, you have determined that they
7 really don't have much of a margin. Is that correct?
8 MR. SHEIKH: I have not looked at the
9 analysis of record. I have looked at the report
10 produced by the applicant in which they stated that
11 there is not too much margin.
12 MEMBER ARMIJO: Can you put a number on
13 that? What do you mean by not too much?
14 MR. SHEIKH: It is just barely -- I mean,
15 it's like 1.5 inches thick, the containment. The
16 actual figure quoted in the report was about that
17 number.
18 MEMBER SHACK: Remember, if you assume
19 uniform thinning, you can't take all that much. You
20 can take localized thinning, sort of a la that famous
21 New Jersey plant.
22 MEMBER ARMIJO: But the burden is going to
23 be on the applicant to find this. Whatever they find,
24 they're going to have to justify acceptability of it
25 to be reviewed by the staff.

1 MR. HOLIAN: This is Brian Holian again.
2 We had wanted to put this in -- the licensee did a
3 good job, I think, in the presentation earlier. But
4 in safety significance perspective, it's an item that
5 we think we're ahead of. I mean, ahead of in some
6 ways.
7 They've been living with leakage for
8 awhile, but they've been allowed to live with leakage
9 based on regional inspectors and other folks looking
10 over their shoulders for years and assessing the
11 safety significance.
12 So in this particular plant, they thought
13 they've had it fixed a few times and that's come back
14 at them. On safety significance though, we do believe
15 that there have not been instances where there's been
16 corrosion through and isolated instances.
17 I think that comment on the margin was
18 more of an overall view. We'll take a look at that
19 again closer. I think it was, as was mentioned there,
20 kind of uniform thinning along that line.
21 We don't see that and we think the
22 licensee is getting ahead of that, but I did want to
23 mention that from a safety significance perspective.
24 This is minor leakage, all within containment -- no
25 isolated instances, so we think we're ahead of it. We

1 have seen it on other plants.

2 I think license renewal has taken a

3 closer look at it because this plant, in particular,

4 raised the issue of what is the flow path. It was

5 harder for the staff to understand here.

6 We had presented to this committee

7 another plant a few months ago that had much larger

8 leakage, but had a little better idea of where it was

9 coming down from the refueling cavity -- out of the

10 welds and almost straight down.

11 So that's one reason why, in particular,

12 we're looking at an issue like this for, is the GALL

13 sufficient? Is there any other aging mechanisms or

14 programs that need to be in place to increase the

15 inspection frequency as you go over longer periods of

16 time?

17 MEMBER ABDEL-KHALIK: I was just trying to

18 put this thing in perspective. When the applicant

19 says they've done a conservative analysis and it

20 shows that the maximum is 10 mils, I want to compare

21 that against what margin they have.

22 It would seem like a reasonable question

23 to ask for which somebody should have an answer right

24 off the top of their head.

25 MR. HOLIAN: The applicant can respond to

1 that, if you like.

2 MR. DOWNING: Hi. My name is Tom Downing.

3 There are a couple of things one considers on that

4 question. One was the design code of the vessel. It

5 was built for section 8. Under that code, we

6 calculated minimum thickness was 1.5 inches.

7 Now, that's very conservative in that

8 pressure vessels are designed with a safety factor of

9 4. The allowable stress is 17.5 KSI. The actual

10 minimum potential stress is 70. So consequently, you

11 could potentially have thinning of 3/4 of the way all

12 the way through wall and not expect the vessel to

13 fail.

14 However, once the vessel is built and

15 installed, it moves from section 8 code to section 11

16 code. Under section 11, any thinning will need to be

17 evaluated. However, thinning of 10 percent or less is

18 acceptable without further evaluation.

19 So consequently, we could have up to 150

20 mils of thinning over a very large area and

21 immediately evaluate it as acceptable. Any more

22 thinning would require further evaluation, but could

23 still be acceptable under section 11.

24 MEMBER ABDEL-KHALIK: Thank you.

25 MEMBER STETKAR: Just to clarify my

1 understanding of the leakage. There is no place where
2 they have actually found evidence of leakage against
3 the liner itself. Is that correct?
4 MR. DOWNING: That's correct.
5 MEMBER STETKAR: The places where they
6 have found leakage is places where the liner is
7 embedded between two layers of concrete -- one below
8 and one above. Is that correct?
9 MR. DOWNING: That's also correct.
10 MEMBER STETKAR: Okay, thank you.
11 CHAIRMAN RAY: The discussion just given,
12 by the way, does appear in the response to one of the
13 RAIs in part C.
14 What I would observe, Brian, is that
15 we've learned through bitter experience to be very
16 concerned about leakage of borated water on
17 mechanical components. We're now aggressively
18 removing deposits of boric acid.
19 We don't have any comparable way of
20 assessing in a context like this what would be the
21 significance of the leakage we're talking about here
22 for structures or, in this case, the containment
23 pressure vessel.
24 It does seem as if we ought to -- I mean,
25 the applicant has done all that, I think, in the

1 context of a license renewal application, one would
2 expect him to do in terms of trying to address things
3 such as the interaction between boric acid and
4 concrete and the likelihood that it doesn't represent
5 a threat to the rebar and so on and so forth.
6 And now we've been talking about the
7 containment, which we have other reason to be
8 concerned about as well, just from an experience
9 stand point.
10 But what's lacking is some generic
11 conclusion about this subject. I just think it would
12 be bad for us to wait until we, in fact, discovered
13 something that was seriously problematic to then say,
14 well, we need to decide whether this is a serious
15 problem or not.
16 As I said, the applicant has said we're
17 going to stop it. Although it has gone on for along
18 period of time, it doesn't -- we don't have any
19 reason to think that there's a problem. Nevertheless,
20 they're going to excavate and look at a sensitive
21 area here and tell us, at least with regard to the
22 period of extended operation, that it's okay.
23 So my personal view is that we've got as
24 much from the applicant as we can, but still, it's
25 not very satisfying that we don't have a better

1 generic way of assessing these kinds of things and
2 saying is this a big deal or not a big deal? Should
3 we worry about it or not worry about it?
4 I'll just leave you with that comment.
5 You can respond as you wish.
6 MR. HOLIAN: No, I think that's a good
7 comment. Prior to making our presentation, we've come
8 here particularly to talk on the license renewal
9 presentation and oftentimes the staff doesn't bring
10 in at these same meetings what we might be looking at
11 generically or generic correspondence or even with
12 research.
13 I know research is pushing NRR and the
14 license renewal staff for operating experience on
15 these type of issues. They are themselves working
16 with EPRI on light water reactor sustainability and
17 cables and concrete for extended periods. So there
18 are actions back at the staff that we're doing.
19 We do interface from license renewals
20 with the reminder with the ROP, reactor oversight
21 process, for kind of moving inspection insights.
22 Should we be doing more from inspection oversight
23 over the years for a problem like this? Is it worth
24 more samples from an inspector? That's one piece.
25 We interface with the individual tech

1 branches on the containment and the cables issue. We
2 do, and I compare this to a recent issue with
3 submerged cables. It's both a license renewal issue.
4 It is in GALL and it is a current operating issue.
5 I don't know what the answer is,
6 particularly today. I did want to put it in the
7 safety significance that the issue does not appear at
8 the plants we've seen to date to be a current issue
9 over the next one year, two years, four years, five
10 years at all at any of these plants.
11 It is something we know we need to track
12 through the period of extended operation and we will
13 pick it up on a generic aspect in some of our task
14 within OR.
15 CHAIRMAN RAY: Well, I don't know where
16 we'll ultimately and the full committee come out on
17 this, but I just don't think we want to leave the
18 impression that while we read all of this stuff, we
19 waited, and we've come to a conclusion in this
20 context.
21 MR. PLASSE: Okay, any other questions for
22 the staff on this issue?
23 Well, with that, that concludes the
24 section 3 review with the exception of the two open -
25 - the new plant-specific vessel internals 10 element

1 program and the cavity issue.

2 The staff concluded that the applicant

3 has demonstrated that aging effects will be

4 adequately managed during a period of extended

5 operation in accordance with 10 CFR 54.21(a)(3).

6 Moving on to chapter 4, just as a note in

7 section 4, we do not have any open items. This is the

8 general layout of section 4.

9 MEMBER ABDEL-KHALIK: Back to the previous

10 slide, if you don't mind.

11 MR. PLASSE: Sure.

12 MEMBER ABDEL-KHALIK: Have you reviewed

13 their root cause evaluation report?

14 MR. PLASSE: We spent -- early on, I

15 showed a slide of the activities of the staff. The

16 staff sent out a team of three individuals -- our

17 contract from Oak Ridge, a branch chief, and a tech

18 staff to review the root cause.

19 Subsequent to that, they had an RAI,

20 which went out, that the applicant responded to on

21 June 25. I can have someone from the staff who was on

22 that one day audit could speak to that, if you would

23 like?

24 MEMBER ABDEL-KHALIK: And you're satisfied

25 that the root cause they have identified is indeed

1 the root cause?

2 MR. PLASSE: That item is still under

3 review. As I stated, the letter just came in June 25.

4 Abdul spoke. He was the tech staff individual.

5 At this point, the staff is still

6 reviewing it. I can't comment unless they would like

7 to comment.

8 MEMBER BONACA: That is a critical element

9 because they now have created a monitoring problem.

10 Then of course, you got the knowledge you're going to

11 monitor and why you're monitoring.

12

13 MR. HOLIAN: Yes, I think from the staff

14 perspective, we're still reviewing the root cause.

15 You heard another plant talk about

16 refueling cavity leakage right through the weld

17 connections halfway up -- refueling cavity.

18 So I know there's some thought of are the

19 bolted connections the primary aspect of the leakage,

20 but the staff will still cover that and cover that in

21 the SER update for the final.

22 MR. PLASSE: Any other comments? Okay,

23 back to section 4.As I stated, we do not have any

24 open items in section 4 in TLA.

25 We do have a few slides of some items

1 that have been of interest in previous ACRS
2 subcommittees and we provide some of that data for
3 your interest.
4 The first area is section 4.2, reactor
5 vessel neutron embrittlement. Review was performed to
6 evaluate fluence and embrittlement in terms of upper
7 shelf energy and pressurized thermal shock. That will
8 be the first couple slides.
9 With respect to upper shelf energy, the
10 limiting beltline materials are stated. Of note is
11 the last two columns, the irradiated Charpy V notch
12 upper shelf energy at 54 effective full power years
13 is 59 foot-pounds for unit one, and 57 foot-pounds
14 for unit two.
15 The acceptance criteria of appendix G for
16 a period in operation is greater than 50 based on
17 since the upper shelf energy values are projected to
18 be greater than the acceptance criteria at 50 pounds.
19 The vessel will have margins of safety
20 against fracture equivalent to those required by
21 appendix G through the end of the period of extended
22 operation.
23 The next slide is with respect to thermal
24 shock, pressurized thermal shock values. Again,
25 eliminating beltline materials, the RTPTS off unit 1

1 is 157 degrees Fahrenheit. For unit 2 is 136. The
2 acceptance criteria for 10 CFR 50.61 is less than
3 270.
4 The staff independently calculated RTPTS
5 values and these values are below the threshold
6 criterion specified in 50.61. Therefore, end of light
7 RTPTS values for all beltline materials at Prairie
8 Island are acceptable.
9 Any questions? The final slide, metal
10 fatigue, we kind of got into a little bit of
11 discussion with the applicant early on.
12 The original application did use
13 FatiguePro. The applicant, as he stated earlier,
14 understood some of the recent issues in the industry
15 and they went through a contract with Structural
16 Integrity in June of `08, completed calcs, which was
17 commitment number 36, which they docketed April 28.
18 Staff competed a review and basically,
19 the results of that were the 60 year fatigue re-
20 analysis applicable to the 6260 locations. None of
21 the cumulative usage factors were greater than one.
22 As the applicant stated earlier, they will continue
23 to manage the cycle counting in accordance with
24 54.21(c)(1)(iii).
25 Any questions on that? Okay, with respect

1 to chapter 4 -- well, with respect to the application
2 in total, pending resolution of the three open items,
3 the staff has determined on the basis of its review,
4 there's reasonable assurance that the requirements of
5 54.29 have been met with respect to managing aging
6 effects through the period of extended operation for
7 the Prairie Island plant.
8 With that, if there's any other further
9 questions, that's the end of my presentation.
10 CHAIRMAN RAY: Thank you, Rick. I have at
11 least one. You heard our discussion of the
12 measurement of the condensate storage tank bottom
13 thickness and the applicant's position that measuring
14 the bottom UT on one tank is sufficient to verify the
15 integrity of all three. I understand the staff has
16 accepted that.
17 The explanation for it, I'm still
18 somewhat at a loss for except maybe the dialogue that
19 said well, if either of the other two were subject to
20 a lot of corrosion, you would see some rust stains
21 external to the tank.
22 Does the staff have anything to add to
23 that?
24 MR. PLASSE: Well, a lot of -- we go
25 through a lot of the one time inspections. There is

1 sampling done to give you data points and then if you
2 find something then you do extended condition --
3 maybe increase the scope.
4 We had several discussions on that
5 particular issue and I probably could have the
6 responsible individual speak to that.
7 CHAIRMAN RAY: Please.
8 MR. YEE: This is On Yee from the division
9 of license renewal.
10 As the applicant stated, they're doing it
11 on a sampling basis of the three tanks. They are
12 going to do the inspection of one tank and then if
13 based on those results, they'll extend the scope and
14 increase the frequency depending on what it is that
15 they find. Other than that, I'm not --
16 MEMBER BONACA: I have a related question.
17 If you find expected degradation in that tank, will
18 you -- do you have a program that says how you will
19 expand your inspection or are you just simply waiting
20 for it to happen and then you'll go to corrective
21 action program and figure out what you have to do?
22 That's important because one could have a
23 narrow view and say okay, we're going to fix the tank
24 and that's it or monitor the tank, but do nothing
25 about the other two.

1 Or you could have a comprehensive
2 response that says since you have found a problem in
3 this tank, I should expand it to the other two and
4 have additional monitoring. We haven't heard anything
5 about the fallback.
6 MR. YEE: This is On Yee again. It's my
7 understanding that of the inspection that they do on
8 that one tank, if they find anything, they'll expand
9 the scopes to the other tanks. If I'm incorrect,
10 correct me.
11 MR. LINDBERG: This is Phil Lindberg. That
12 is correct.
13 MEMBER ARMIJO: The assumption is that all
14 the tanks are identical. They've operated in the
15 identical manner and they're all going to behave
16 identically. I just don't see why that's a sound
17 assumption.
18 CHAIRMAN RAY: One out of three -- the
19 reference to sampling just doesn't seem to fit here
20 to me because nothing has been done to demonstrate
21 that the three tanks would be identical if for some
22 reason there was water intrusion in one in the area
23 of concern because of a failure of the seal at some
24 time in the past.
25 It just seems very odd to have three

1 tanks like this and to decide that just one of them
2 needs to be inspected because it will be indicative
3 of the other two. I'll leave it at that.
4 MR. BARTON: I have a question. What's the
5 consequences of a failure of the bottom of one
6 condensate storage tank?
7 CHAIRMAN RAY: Well, we're doing about a
8 seismic event presumably. Some design basis event,
9 which there's a need for condensate to remove decay
10 heat following the event.
11 It's very hard to say if there's one tank
12 or two of the three tanks that has a weakened tank
13 bottom. I guess you've answered the question.
14 MR. HOLIAN: This is Brian Holian. Just to
15 add, the staff appreciates these comments because we
16 similarly during reviews, we bring up those same
17 questions and we're not constrained by GALL. GALL is
18 written as guidance.
19 We're continuing to learn from operating
20 experience, as we expect the applicant to do so. On
21 this particular item, we'll take a closer look at
22 their justification for three tanks in a similar
23 environment.
24 On these tanks, we do expect current tech
25 specs control, water level in the condensate storage

1 tanks. Those get monitored by operators on a daily
2 basis. So there's other layers of safety here for
3 reviews that might pick up degradation in these tanks
4 vice this one time inspection.
5 But the general thought about crediting
6 one term inspections and going from there -- the last
7 item I'll add in is that the region will be back.
8 They will be back at the 71003 inspections during
9 another period of extended operation.
10 We've learned a lot from the region 1
11 inspections that we've just done on the plants prior
12 to going into a period of extended operation. I know
13 the next RIC that's going to be an item of discussion
14 with the industry is in general.
15 But that's a time for us to learn and
16 kind of generic industry learn on is this sampling
17 appropriate for what we're seeing as they go into the
18 extended period.
19 CHAIRMAN RAY: That's fair enough, Brian.
20 I would just say we sometimes forget that what we're
21 looking at here are, as I say, design basis events
22 and not simply as a leak developed during the course
23 of normal operation. So I'm not sure that ongoing
24 satisfactory operation is always an adequate
25 indicator that we're in compliance with our design

1 basis.

2 MEMBER BONACA: I guess my question goes

3 in the direction of a one time inspection concept is

4 you do it once because you believe that there is an

5 effect in place. You just want to verify it.

6 By definition, when you do that, you

7 don't provide any information about what else you may

8 do should you find, in fact, that there is some

9 degradation.

10 The implication is that you throw it to

11 the corrective action program and then you establish

12 some kind of program. So it's hard for us to make a

13 judgement about the adequacy of the thought process

14 there because of that.

15 I guess I don't have an objection with

16 one time inspections, but I'm always left with a

17 question in my mind of what answer can you except the

18 licensee to do and I can see a big range, depending

19 on how they respond to a root cause of an event of

20 that nature.

21 MR. PLASSE: Let me see if I can maybe

22 shed some light from a part 50 perspective. I used to

23 be a resident and I worked for an applicant for 13

24 years as a licensing engineer.

25 Plants, every day that they find

1 deficiencies, over a course of a year, a single unit
2 will write 3000 corrective action reports. The
3 challenge for the applicant for a licensee is to
4 review those and take the appropriate corrective
5 actions, look at extended condition.
6 That's always subject to second-guessing,
7 Monday morning quarter-backing by their own people
8 and the NRC. So to be able to sit here and tell you
9 for any deficiency that the plant identifies, what
10 are they going to do, what's the right thing --
11 that's kind of that little bit abstract.
12 But in the course of business, everything
13 that they identify, it is a challenge to them to do
14 the right thing.
15 Now, they don't always do the right thing
16 in 100 percent of the cases and they have lessons
17 learned and they try to improve it the next time.
18 The NRC will do what the residents --
19 they do reviews on a daily basis and then
20 periodically, they do what's called a problem
21 identification review inspection, P&IR, or they look
22 at in total from a little bit of a big picture to see
23 is their corrective action program effective.
24 I mean, that's a little bit outside of
25 this area, but that's --

1 MEMBER BONACA: I agree with you. I
2 believe the corrective action program is the
3 foundation of everything. However, this proceeding
4 here is about license renewal --
5 MR. PLASSE: Exactly.
6 MEMBER BONACA: Where you put on paper
7 problems that you intend to implement to address
8 degradation, should you find it. So I don't think
9 it's inappropriate.
10 Now, the question is, to what extent
11 should you define that future. I agree that in some
12 cases, you don't want to have a fall back program
13 behind a one time inspection.
14 I'm only saying that given that these
15 events have happened, I'm uneasy to not know really
16 how it's going to be handled.
17 Anyway, that's as far as I'll go.
18 CHAIRMAN RAY: Okay, other questions for
19 the staff? Hearing none, thank you, Rick.
20 MR. PLASSE: Thank you.
21 SUBCOMMITTEE DISCUSSION
22 CHAIRMAN RAY: Okay, it's now time for the
23 subcommittee to have some discussion of the license
24 renewal application for Prairie Island.
25 I would like to start with our

1 consultant, John Barton, and ask him to summarize
2 anything that he'd like to put on the table for us to
3 consider.
4 MR. BARTON: The only concern I have in
5 looking at all the documents I reviewed is the
6 decision finally to do something with the cavity leak
7 that's been going on for years and years without
8 really understanding maybe what damage has been going
9 on for all these years.
10 I mean, when you look at the fix, the fix
11 is relatively simple. I think when you have a problem
12 like this, you may try initially try to find the
13 leak, seal the leak.
14 If that doesn't correct the problem, I
15 think you get in. You don't wait 30-something years
16 before you decide to make the correction. The
17 correction that they're going to do is relatively
18 simple.
19 As far as overall, that's the -- I don't
20 have any other issues that impede this applicant from
21 license renewal.
22 CHAIRMAN RAY: Thank you. Jack?
23 MEMBER STETKAR: I have no comments beyond
24 John's and those that I made during this discussion.
25 I didn't find serious problems with what they were

1 doing.

2 I do have curiosity about the limitation

3 of the inspection of all three condensate storage

4 tanks, recognizing however, that the more likely

5 thing that will happen is not necessarily a seismic

6 event but just general leakage and its safety

7 function is in aux feed as opposed to normal plant

8 operation. So it depends on the magnitude of the

9 catastrophic effect.

10

11 MR. ECKHOLT: This is Gene Eckholt. We

12 should clarify. The condensate storage tanks at

13 Prairie Island are not safety relayed.

14 MEMBER STETKAR: That's right.

15 MR. ECKHOLT: The safeguard supply is

16 river water to the aux feed pumps.

17 MEMBER STETKAR: Okay.

18 CHAIRMAN RAY: Well, they are, I assume,

19 used for decay heat removal under some emergency

20 conditions.

21 MR. ECKHOLT: That's correct.

22 MEMBER STETKAR: That's right and that

23 puts them in scope.

24 MEMBER MAYNARD: But what they're taking

25 credit for is the river water. In normal operation,

1 they're going to use the condensate storage tank and
2 in an emergency, they will, if the condensate storage
3 tanks are there, so they can use the cleaner water.
4 But the river water is always there available for an
5 emergency.
6 MEMBER STETKAR: That's a one shot deal
7 though. Then you replace the irrigation.
8 CHAIRMAN RAY: Okay, Sam?
9 MEMBER ARMIJO: I would like to see the
10 staff's final evaluation of the root cause analysis
11 and make sure that the staff agrees with the
12 applicant on the source of the leakage.
13 It seems to me, based on what I've heard,
14 that they have identified the leakage because they've
15 been capable on more than one occasion of stopping it
16 with the caulking. But I would like to see that.
17 I think the inspection -- they're going
18 as far as reasonably doable to actually excavate
19 underneath in that sump region. I think that will
20 tell us a lot.
21 I think that 10 mil number is a little
22 bit unnecessary to even talk about -- should talk in
23 terms of how much margin there is. The applicant's
24 clarification of that 150 mils is the real margin
25 makes me a lot more comfortable.

1 Even if they find 20 or 30 mils of
2 general wastage there, it's not the end of the world
3 if they fix a leak. So that's all I have.
4 CHAIRMAN RAY: Dana?
5 MEMBER POWERS: I think we've identified
6 anything that's a smoking gun here. We've identified
7 a generic issue that we need to think about doing
8 something.
9 I'd say a question, which I think is an
10 interesting one is, is freeze/thaw more damaging than
11 wet/dry. I suspect that nobody has looked at that and
12 that's a generic issue that needs to be put on the
13 board some place. I'm not sure where we put that on
14 the board.
15 But, I mean, we need to preserve -- I
16 mean, it seems like a legitimate question, especially
17 since we're finding an awful lot of plants in this
18 licensure renewal phase that are getting their cables
19 very wet.
20 Those in Florida probably don't have to
21 worry about freeze/thaw. But as you move north, that
22 freeze/thaw question is a question.
23 I personally am not familiar with anybody
24 looking at it. As cable insulation ages, I would
25 assume freeze/thaw cycles break it. I don't know.

1 CHAIRMAN RAY: Well, I suppose we would
2 assume, would you not, that direct buried cable is
3 subject to moisture by definition?
4 MEMBER POWERS: By definition.
5 MEMBER ARMIJO: How deep is it buried
6 below the freeze line?
7 CHAIRMAN RAY: Well, moisture and freezing
8 are two different issues. I just assume any direct
9 buried cable is subjected to moisture. Anybody who
10 says no, it's not, I think has got a big burden to
11 carry. Bill?
12 MEMBER SHACK: No additional comments.
13 CHAIRMAN RAY: Mario?
14 MEMBER BONACA: No additional comments. I
15 mean, I made a concern about the underground cables
16 being dealt with.
17 CHAIRMAN RAY: Otto?
18 MEMBER MAYNARD: I had a clarification and
19 a couple of generic items.
20 On the condensate storage tank, I'm not
21 really overly concerned from a safety stand point. I
22 believe that the probability of a catastrophic
23 failure without identifying some leakage would
24 probably be pretty darn remote.
25 I'm still a little bit concerned about

1 just the justification for doing one. It's not so
2 much from the internal treatment of the condensate
3 storage tank. It's more of -- I'd like to see a
4 justification of why there's some type of external
5 environment to water getting around into places on
6 one that would not be getting around on another.
7 That's kind of part of the discussion
8 that I'm missing on why one is acceptable as both the
9 other. Or what external environment may occur as
10 opposed to internal.
11 But again, from a safety perspective,
12 they're not safety related, counting on the river
13 water, and the chance of catastrophic failure is
14 pretty low.
15 From just generic, there's two things.
16 One is for the industry. I haven't really seen any
17 applicant come in and give a good presentation on
18 what they're doing relative to water in the vaults
19 and their understanding and justification for the
20 frequency.
21 Everybody seems to be picking two year,
22 one year, quarterly or whatever without much
23 justification as to what -- that's all right, but
24 that's more that I'm seeing from the industry than
25 specific to this.

1 The others on the NRC and this is on the
2 station blackout scoping as to where we stand with
3 that. There still some inner discussions going on.
4 We're spending rate payer and tax payers'
5 money going ahead and doing things that may or may
6 not be required. I think we really do need to get it
7 resolved, the station blackout scoping, of just what
8 really is required on that.
9 So those are my two generic comments.
10 CHAIRMAN RAY: On the last one, though,
11 can you apply it more directly here to Prairie
12 Island?
13 MEMBER MAYNARD: Again, it's a generic
14 statement because Prairie Island decided to just go
15 ahead and add it to the scope. So that's an
16 additional cost. That's an additional activity.
17 There's been additional discussions going on.
18 Ultimately, they may or may not end up being
19 required.
20 Those are the types of things that we
21 need to get a resolution on whether it is or it is
22 not.
23 CHAIRMAN RAY: But you wouldn't identify
24 it as a comment that you would make in the context of
25 this application?

1 MEMBER MAYNARD: No. My last two comments
2 were just generic. I'm just venting. I would not put
3 them in any letter or any contact for Prairie Island.
4 MEMBER ABDEL-KHALIK: I have no additional
5 comments.
6 CHAIRMAN RAY: Well, my comment is in this
7 generic domain, but I'm not sure that it doesn't --
8 this isn't an opportunity to raise it. It's
9 basically, without repeating myself, the dialogue I
10 had with Brian about how it seems to me to be
11 unsatisfactory that we don't have more clarity around
12 the significance of, to structures, of borated water
13 leakage.
14 It's something that is not unknown.
15 There's a lot of rational and plausible easing about
16 why it should not be a matter of concern, but when
17 you talk about a long period of time, even assuming
18 this fuel transfer canal is fixed, as Prairie Island
19 intends, there's a larger question about well, from
20 whatever source it may have come, it's there and it's
21 there for a long, long time unless you have some way
22 to remove it or discover that it's present.
23 I don't know that we have a good basis
24 for feeling comfortable about it. I guess I'll use
25 the example of, well, we've learned certainly on

ferrous components to be very concerned, particularly if they're at elevated temperatures. If there's boric acid deposits, we want to discover them and remove them right away and make sure there's no degradation taking place.

Lower temperatures in concrete rebar, different environment, but should we have no concern? I wish we had a better handle on that.

But I don't think it applies here, other than this is simply a place where we might, as Dana commented in his case, identify it as something which deserves attention generically.

But we can -- I don't if anybody else has anything more they would like to say that or anything else. If not, we're adjourned.

(Whereupon, the meeting concluded at 11:32 a.m.)

Prairie Island Nuclear Generating Plant

ACRS License Renewal Subcommittee Meeting

Xcel Energy® | RESPONSIBLE BY NATURE™

Introductions

- **Mike Wadley – Site Vice President**
- **Gene Eckholt – License Renewal Project Manager**
- **Steve Skoyen – Engineering Programs Manager**
- **License Renewal Project Team and Subject Matter Experts**

Agenda

- Background
- Operating History
- Plant Description & Major Improvements
- License Renewal Project
- Renewed License Implementation
- Specific Technical Items of Interest
- Summary

Background

- Plant Owner and Operator
  - Northern States Power – Minnesota (NSPM)
  - Subsidiary of Xcel Energy
- Location
  - SE of Minneapolis-Saint Paul, MN
  - On Mississippi River

Background

- Two 2 - Loop PWR Units
  - 1650 MW_t
  - 575 MW_e (Gross) per Unit
- Westinghouse - NSSS
- Pioneer Service & Engineering - Architect/Engineer
- Dual Containment Design
  - Steel Containment within Limited Leakage Concrete Shield Building (5 foot annulus)

Background

- **Once-Through Cooling Supplemented with Four Forced Draft Cooling Towers (Seasonal)**
- **Ultimate Heat Sink is Mississippi River via Cooling Water System**

Operating History

- Construction Permits Issued - June 1968
- Operating Licenses Issued
  - Unit 1 - August 1973
  - Unit 2 - October 1974
- LRA Submitted – April 2008

Operating History

- Unit 1
  - Completed Refueling Outage 25 in Spring 2008
  - Lifetime Capacity Factor 84.2%
  - Cycle to Date Capacity Factor 96.6%
  - Next Refueling Outage – Fall 2009
- Unit 2
  - Completed Refueling Outage 25 in Fall 2008
  - Lifetime Capacity Factor 86.5%
  - Cycle to Date Capacity Factor 98.0%
  - Next Refueling Outage – Spring 2010

Major Plant Improvements

- 1983 - Constructed New Intake Screen House and Reconfigured Intake and Discharge Canals
- 1986 & 1987 - Replaced Reactor Vessel Upper Internals
- 1993 - Added Two New Diesel Generators to Unit 2
  - Separated Units Electrically
  - Cooling Water Pump Upgraded to Safety Related to Provide Swing Backup to Diesel Cooling Water Pumps
- 2004 - Replaced Unit 1 Steam Generators
  - Unit 2 Replacement is Planned
- 2005 & 2006 Replaced Reactor Vessel Heads

License Renewal Project

- Project Team
- Scoping
- Aging Management Reviews
- Aging Management Programs
- Aging Management Program Exceptions
- Time Limited Aging Analyses
- Commitments

License Renewal Project Team

- **LR Engineering Supervisors are NSP Employees**
  - **Extensive Plant Knowledge and Experience**
  - **Trained and Mentored by Other Plants with Renewed Licenses**
- **Contract Support Staff has Significant LR Experience**
- **Plant Subject Matter Experts Provided Support**
  - **Reviewed LRA Input Documents**
  - **Supported NRC LR Audits and Inspection**
- **LR Project Team Engaged with Industry**
  - **NEI LR Task Force and Working Groups**
  - **Observed NRC LR Audits and Participated in LRA Peer Reviews at Other Plants**

Scoping

- **Process Consistent with NEI 95-10 Rev 6**
- **Boundary Drawings Highlight Components for All Scoping Criteria**
- **Switchyard Scoping Boundary Includes Breakers at Transmission System Voltage**

Switchyard Scoping Boundary

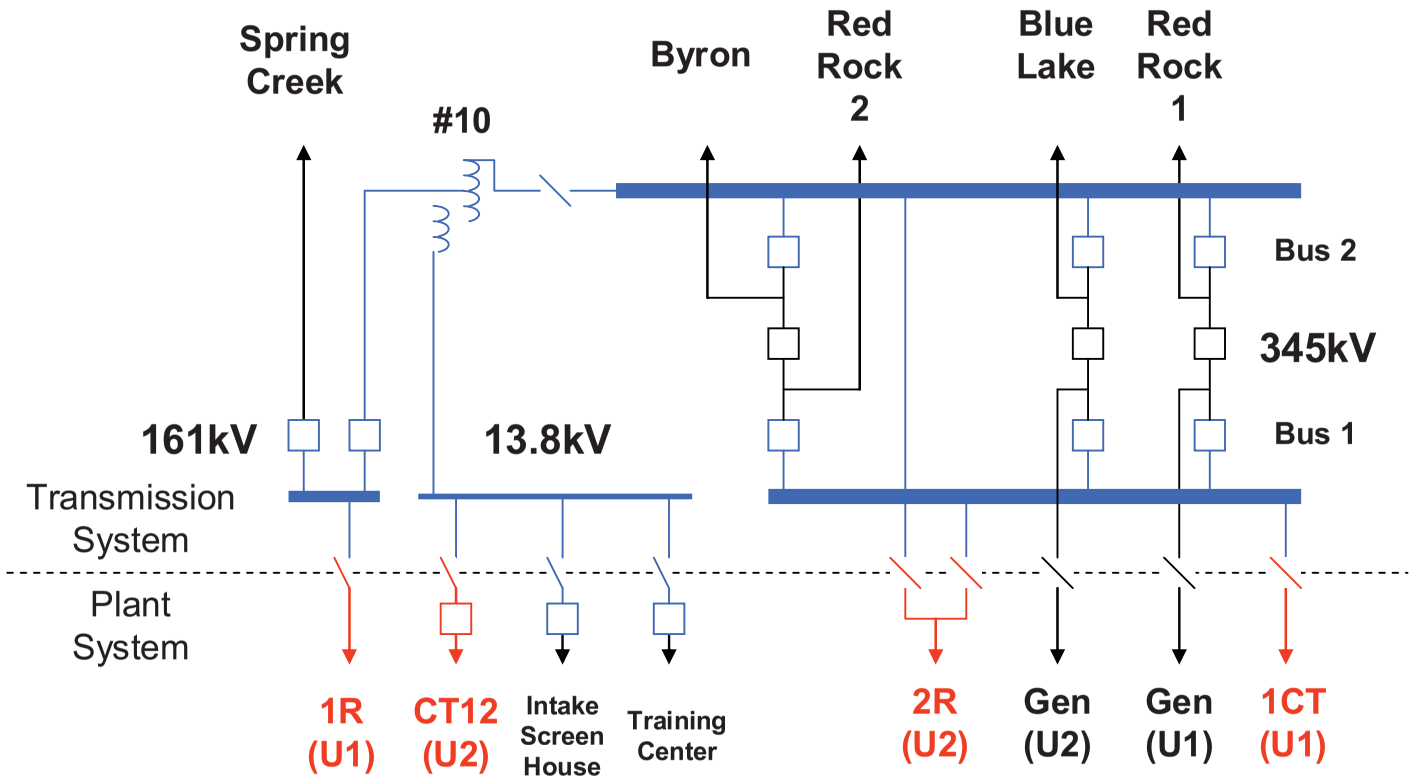

PINGP CLB Scope

Expanded LR Scope per Proposed ISG 2008-01

Aging Management Reviews

- **Aging Management Reviews Consistent with Guidance in NEI 95-10**
- **Maximized GALL Consistency to Extent Practical**
- **89.2% of AMR Line Items Consistent with GALL (Notes A-D)**

Aging Management Programs

- **43 Aging Management Programs**
  - **29 Existing Programs**
  - **14 New Programs**
- **Program Consistency With GALL**
  - **31 Programs Consistent with GALL (9 include Enhancements)**
  - **10 Programs Consistent with Exceptions (6 also have Enhancements)**
  - **2 Plant-Specific Programs**

Typical AMP GALL Exceptions

- **Typical AMP GALL Exceptions Include the Use of:**
  - **More Recent Revision of Industry Standard than Revision Cited in GALL**
  - **Different (or additional) Industry Standards**
  - **Alternatives to Performance Testing specified in GALL**
  - **Alternate Detection Techniques or More Recent NRC Guidance than GALL Recommends**
  - **Alternate to Inspection/Test Frequency Specified in GALL**

Time-Limited Aging Analyses

- **TLAA Identification/Disposition Consistent with NUREG-1800 and NEI 95-10**
- **Evaluated In Accordance with 10 CFR 54.21(c)(1)**

Commitment Management

- **36 Regulatory Commitments for Future Action Resulting from LRA**
- **Commitments are Tracked Through PINGP Commitment Tracking Program**
- **Commitments have been Assigned to Station Personnel for Implementation Prior to PEO**

Implementation

- Implementation of LR Program is Responsibility of Engineering Programs Department
- Implementation will be Managed under Formal Change Management Plan
- All Aging Management Programs have Plant Owners
- Engineering Staff has already been Augmented to Implement Renewed License Requirements

Specific Technical Items of Interest

- **Underground Medium Voltage Cables**
- **SER Open Items**
  - **PWR Vessel Internals Program**
  - **Waste Gas Decay Tank Scoping**
  - **Refueling Cavity Leakage**

Underground Medium Voltage Cables

- **Failure of Circ Water Pump Cable Caused Unit 1 Trip in May 2009**
  - **Root Cause Evaluation and EPRI Testing of Cable in Progress**
- **Plant has Experienced Three Other Cable Failures**
  - **2 - 13.8 kV (at cable termination)**
  - **1 - 4.16 kV (at cable termination)**
- **Cable Insulation Testing Being Implemented by the Inaccessible Medium Voltage Cables Not Subject to 10 CFR 50.49 Environmental Qualification Requirements Program**

SER Open Item
PWR Vessel Internals Program

- **GALL Anticipates Future PWR Vessel Internals Program**
  - **Specifies Commitment to Implement Program**
- **As Part of Hearing Process the ASLB Admitted Contention that Commitment Alone was Insufficient**
- **To Resolve Contention a Plant-Specific PWR Vessel Internals Program was Submitted 5/12/09**
  - **Program is Based on EPRI MRP-227 Rev 0 (Dec. 2008)**
- **ASLB has Dismissed Contention**
- **NRC Staff Review in Progress**

SER Open Item
Waste Gas Decay Tank Scoping

- **SSC are in Scope per 10 CFR 54.4.a(1) if, in part, they Prevent or Mitigate the Consequences of Accidents Which Could Result in Offsite Exposures "Comparable" to Those Referred to in 10 CFR 100.11**
- **PINGP Maintains WGDTs as Safety Related**
- **WGDTs Not Initially in Scope Because Offsite Exposure Potential not Considered "Comparable"**
- **WGDTs have been Reclassified as in LR Scope**
- **LRA Scoping Changes were Submitted 6/5/2009**
- **NRC Staff Review in Progress**

SER Open Item
Refueling Cavity Leakage

- **NRC was Briefed on Refueling Cavity Leakage During Aging Management Audit**
- **NRC has Reviewed Issue in Public Meeting, RAIs and Specific Site Audit of Documentation**
- **NSPM has Responded to all NRC RAIs, Most Recently in Letter Dated June 24, 2009**
- **NRC Staff Review is in Progress**

SER Open Item
Refueling Cavity Leakage

- **Detailed Review of Issue Follows**
  - **Background on Leakage**
  - **Containment Configuration**
  - **Leak Locations & Leak Paths**
  - **Inspection Results to Date**
  - **Corrective Actions**
  - **Long Term Aging Management**
  - **Evaluation of Potential Degradation**

Refueling Cavity Leakage Background

- **Intermittent Leakage Indications in Both Units Since Late 1980s**
- **Leak Rate is 1-2 Gallons per Hour – Seen in ECCS Sump and Regenerative Heat Exchanger Room**
- **Source is Refueling Cavity Based on:**
  - **Leakage Indications Typically Begin 2 - 4 Days After Refueling Cavity Flood and End Approximately 3 days After Cavity is Drained.**
  - **Chemistry Indicates Refueling Water**
- **Sealing Methods Have Been Successful, but not Consistently**

Refueling Cavity Leakage Background

- **Root Cause Evaluation was Performed Following Most Recent Refueling Outage**
- **Sources of Leakage were Determined to be Embedment Plates for Reactor Internals Stands and Rod Control Cluster Change Fixture**

Refueling Cavity Leakage Containment Design

Containment Vessel

- **Steel Containment Vessel**
  - **1-1/2 inch Thick Bottom Head, 1-1/2 inch Shell, 3/4 inch Top Head**
  - **3-1/2 inch Thick at ECCS Sump (sump B) Penetrations**
  - **SA-516-70 Low Temperature Carbon Steel**
- **Provides Primary Containment**
- **Lower Head Encased in Concrete**
- **5 foot Annular Gap Between Containment Vessel and Limited Leakage Reinforced Concrete Shield Building**

Leakage Seen in ECCS Sump and in Regenerative HX Room (below cavity)

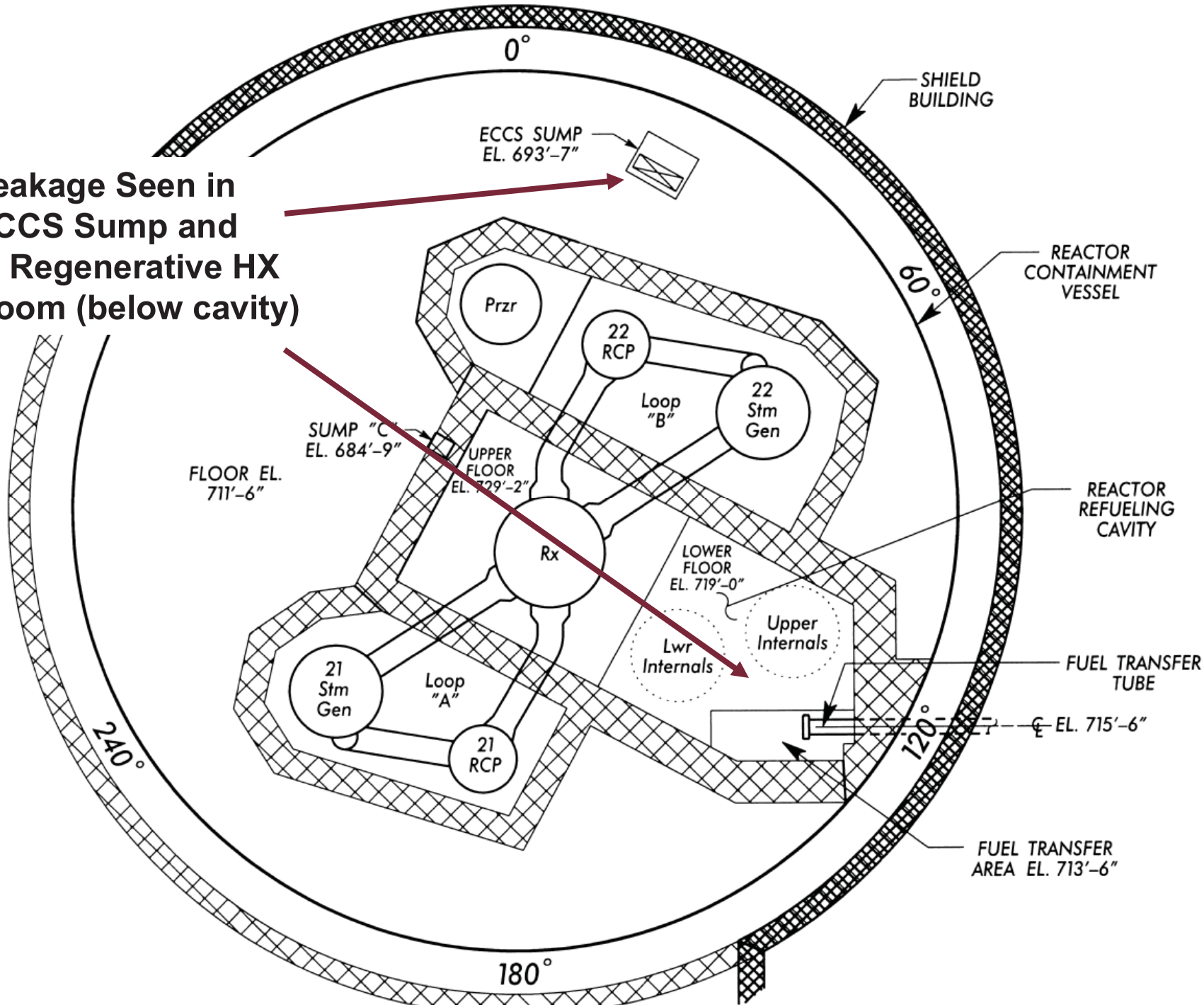

Cavity Photo from NW

Cavity Photo Overhead

Containment Elevation

Refueling Cavity Leakage
Leak Locations

Typical Reactor Vessel Internals Stand Support

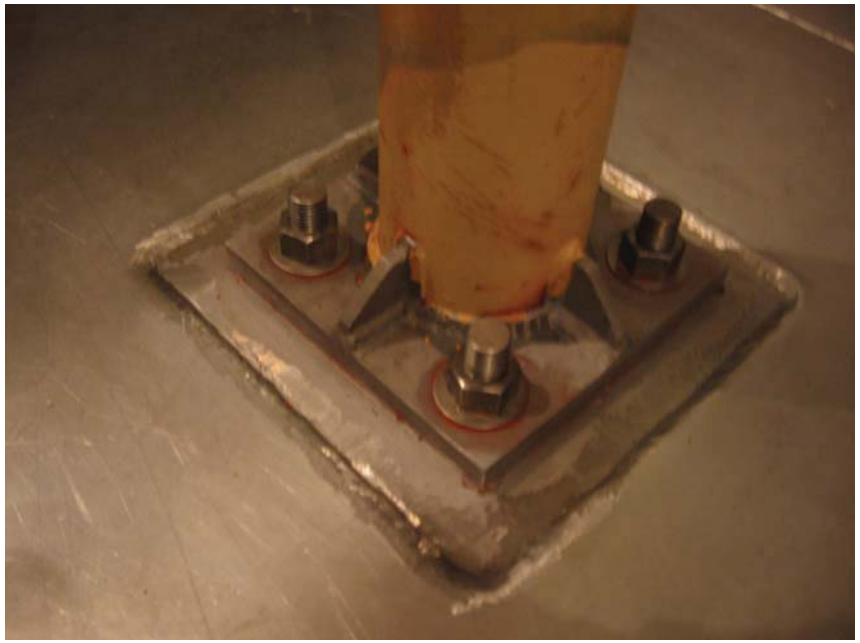

Typical RCC Change Fixture Support

Refueling Cavity Leakage
Leak Locations

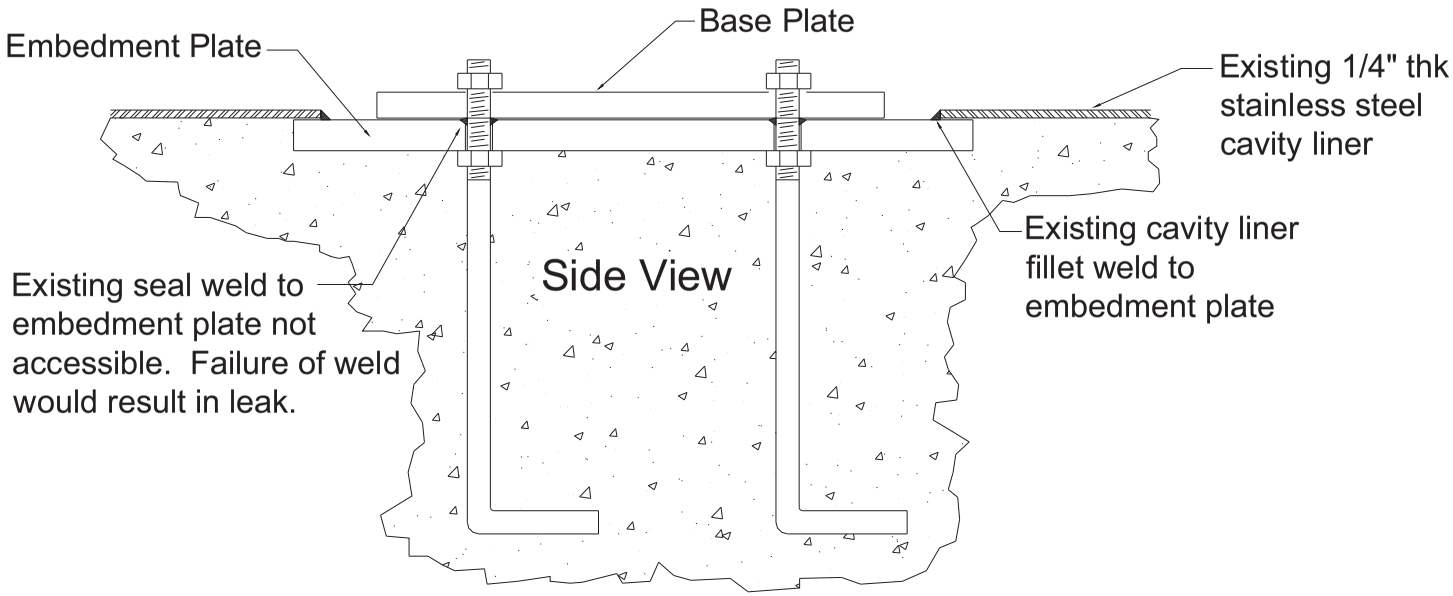

General Arrangement of Change Fixture Supports

Refueling Cavity Leakage Path

- **Path to ECCS Sump**
  - **Under Refueling Cavity Liner Through Construction Joint Between Floor of Transfer Pit and Wall Behind Fuel Transfer Tube to Inner Wall of Containment Vessel**
  - **Travels Down and Horizontally, Between Containment Vessel and Concrete, to Low Point of Containment Vessel Bottom Head**
  - **Seeps Through Grout in ECCS Sump**
- **Path to Regenerative Heat Exchanger Room**
  - **Once Under Liner, Follows Cracks in the Concrete, Seeping Through the Ceiling and Walls of the Regenerative HX Room**

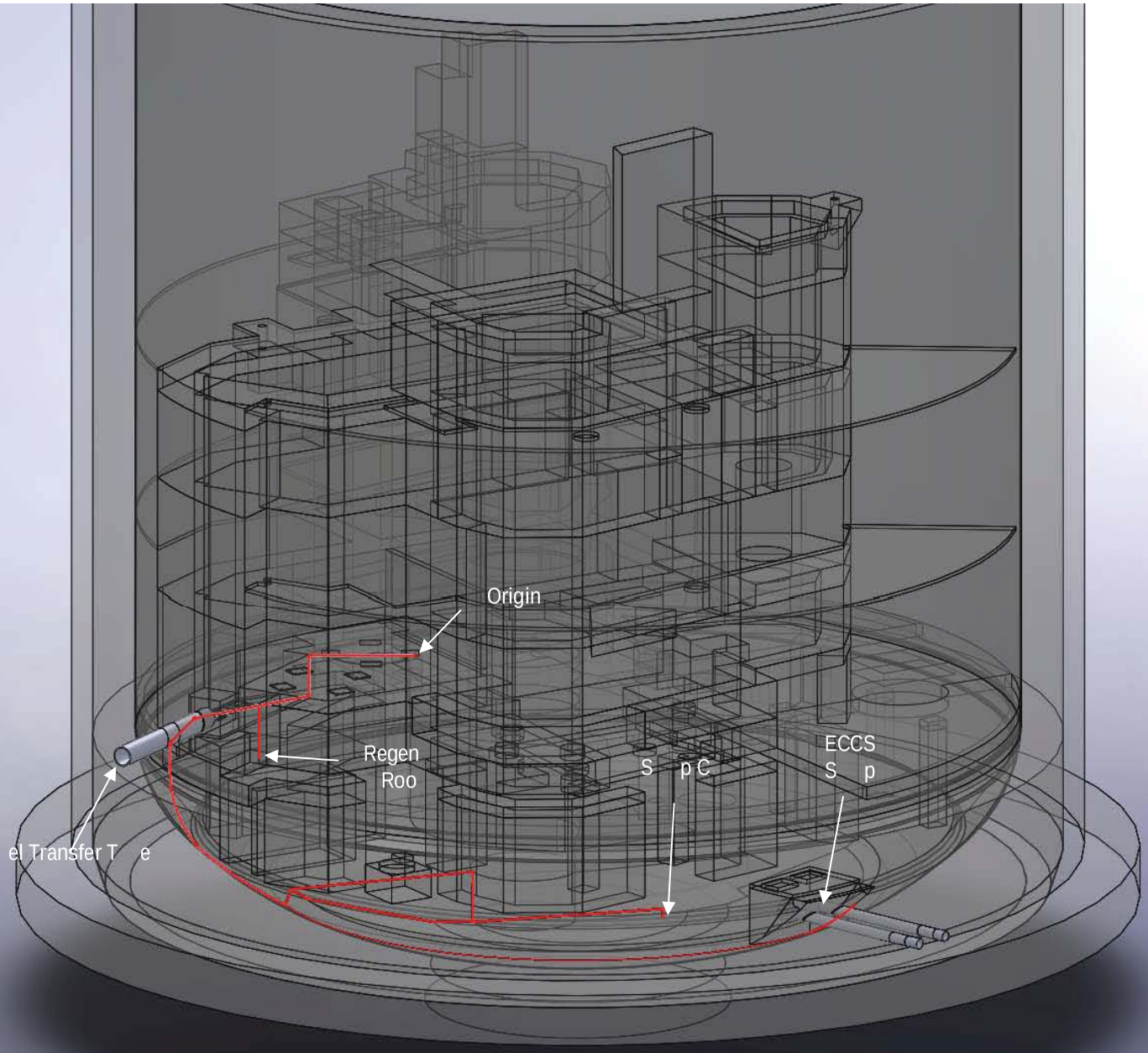

Leak Paths

ECCS Sump

Refueling Cavity Leakage Inspection Results to Date

- **Ultrasonic and Visual Examinations of Containment Vessel**
  - **ECCS Sump**
    - **Grout Removed**
    - **Wall Thickness Measurements at or Above Nominal**
    - **No Corrosion Identified.**
  - **Annulus**
    - **Wall Thickness Measurements at or Above Nominal**
    - **No Corrosion Identified**

Sump Section

Annulus Photo

Containment Elevation

Refueling Cavity Leakage Corrective Actions - Repairs

- **Perform Repairs to Eliminate Leakage During Next Refueling Outage of Each Unit**
  - **Unit 1 – September 2009**
  - **Unit 2 – April 2010**

Refueling Cavity Leakage Corrective Actions - Repair Method

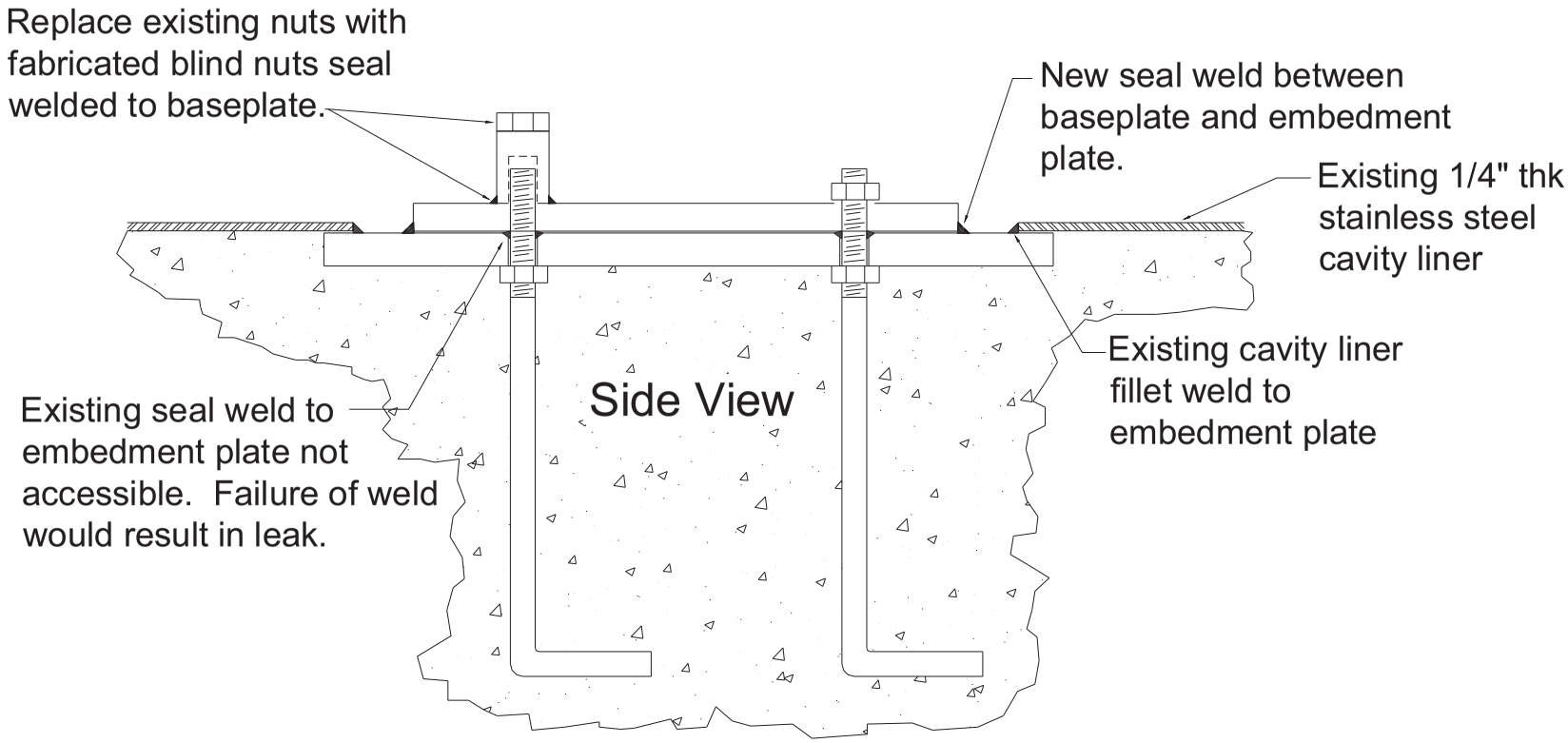

Refueling Cavity Leakage
Corrective Actions – Monitoring & Assessment

- **Enhance Monitoring by Removing Concrete from Sump Below Reactor Vessel to Expose Containment Vessel**
  - **Next Outages Following Refueling Cavity Repairs**
  - **Inspect (VT and UT) Containment Vessel and Assess Concrete**
  - **Evacuate any Water Observed**
- **Additional Assessment**
  - **Margin Assessment of Containment Vessel, Concrete and Rebar**
  - **Evaluate Structural Requirements and Potential Degradation in Concrete Around Transfer Tube**

Refueling Cavity Leakage
Long Term Aging Management

- **Monitor Areas Previously Exhibiting Leakage for Next Two Outages After Repairs to Confirm That Leakage has not Recurred**
- **Continue General Monitoring for New Leakage Using Structures Monitoring Program and ASME Section XI Subsection IWE Program for Remainder of Plant Life**
- **Utilize Corrective Action Program for Evaluation and Correction of New Issues**

Refueling Cavity Leakage
Evaluation of Potential Degradation

- **Evaluations have been performed for potential degradation of:**
  - **Steel Containment Vessel**
  - **Concrete**
  - **Rebar**

Refueling Cavity Leakage Evaluation of Potential Degradation

- **Steel Containment Vessel**
  - **No Corrosion has been Identified**
  - **Water is Essentially Stagnant - Oxygen Would be Consumed to Preclude Continued Corrosion**
  - **Alkalinity from the Concrete Would Elevate pH to Inhibit Corrosion in Wetted Areas**
  - **Containment Vessel Corrosion Behind Concrete in Areas Wetted by Refueling Cavity Leakage Would be no More than 10 mils**

Refueling Cavity Leakage
Evaluation of Potential Degradation

- **Concrete**
  - **Long Term Exposure to Acid can Dissolve CaOH in Cement Binder and Soluble Aggregate**
  - **Dissolving CaOH Neutralizes Acid if not Refreshed.**
  - **At Refueling Cavity Liner**
    - **Evaluation Concluded Negligible Effect on Refueling Cavity Walls and Floor**
    - **Concrete at Transfer Tube End Still Being Evaluated Since Thickness <1 foot.**

Refueling Cavity Leakage Evaluation of Potential Degradation

- **Concrete (Cont'd)**
  - **At Containment Vessel Inside Surface**
    - **Water is Essentially Stagnant so Acid Would be Neutralized by Alkalinity in Concrete with Minimal Effect**
  - **At Cracks**
    - **Water is Essentially Stagnant so Acid Would be Neutralized by Alkalinity in Concrete with Minimal Effect**

Refueling Cavity Leakage Evaluation of Potential Degradation

- **Rebar**
  - **Some Potential for Refueling Cavity Leakage to Reach Rebar in Cracks**
  - **Corrosion of Wetted Rebar is Inhibited by Alkalinity (CaOH) of Concrete, Which Promotes Protective Layer**
  - **Qualitative Assessment Concludes There Have Been no Significant Signs of Rebar Corrosion**
  - **Corrosion of Rebar, Whether Wetted Periodically or Continuously, Would be Minimal**

Refueling Cavity Leakage Evaluation of Potential Degradation

- **Conclusions**
  - **Expected Containment Vessel Corrosion Behind Concrete in Areas Wetted by Refueling Cavity Leakage is Minimal**
  - **Concrete Degradation or Rebar Corrosion Would not have had a Significant Effect on Reinforced Concrete That Has Been Wetted by Refueling Cavity Leakage**

Summary

- **LRA Developed by Experienced Team**
- **LRA Conforms to Regulatory Requirements and Follows Industry Guidance**
- **PINGP Will Be Prepared to Manage Aging During the Period of Extended Operation**

Questions?

Xcel Energy® | RESPONSIBLE BY NATURE™

Backup Slides

Plant Electrical Distribution

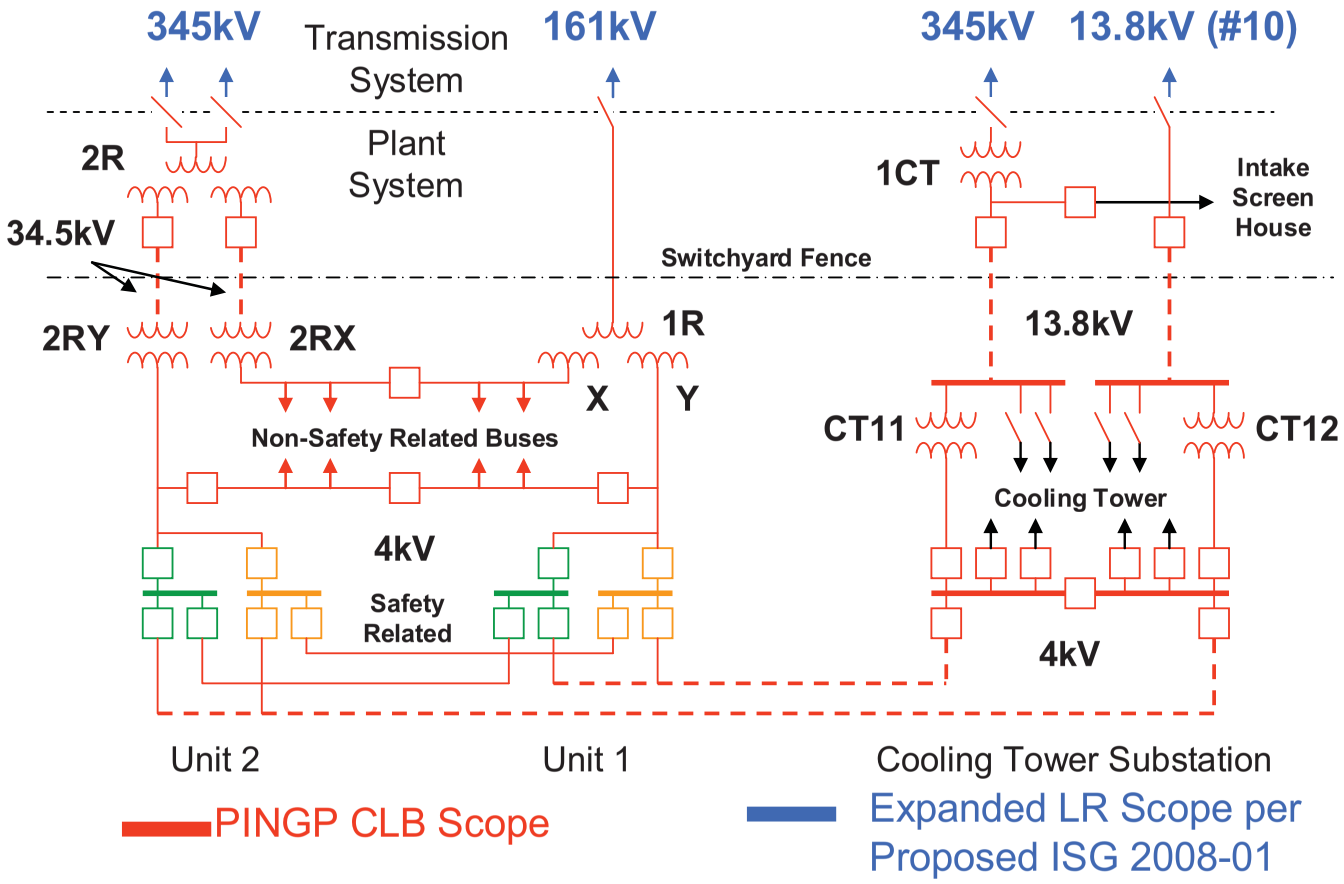

Xcel Energy® | RESPONSIBLE BY NATURE™

Aging Management Programs

- **Programs with Exceptions to GALL**
  - **Bolting Integrity Program**
  - **Closed-Cycle Cooling Water System Program**
  - **Compressed Air Monitoring Program**
  - **Electrical Cable Connections (E6) Program**
  - **Fire Protection Program**
  - **Flow-Accelerated Corrosion Program**
  - **Fuel Oil Chemistry Program**
  - **Selective Leaching of Materials Program**
  - **Steam Generator Tube Integrity Program**
  - **Water Chemistry Program**

Shield Building Annulus

UT exam of containment vessel from annulus was performed. Scanned 18' long x 2' high area with all readings above 1.5 inch nominal plate thickness.

ECCS Sump Showing Grout

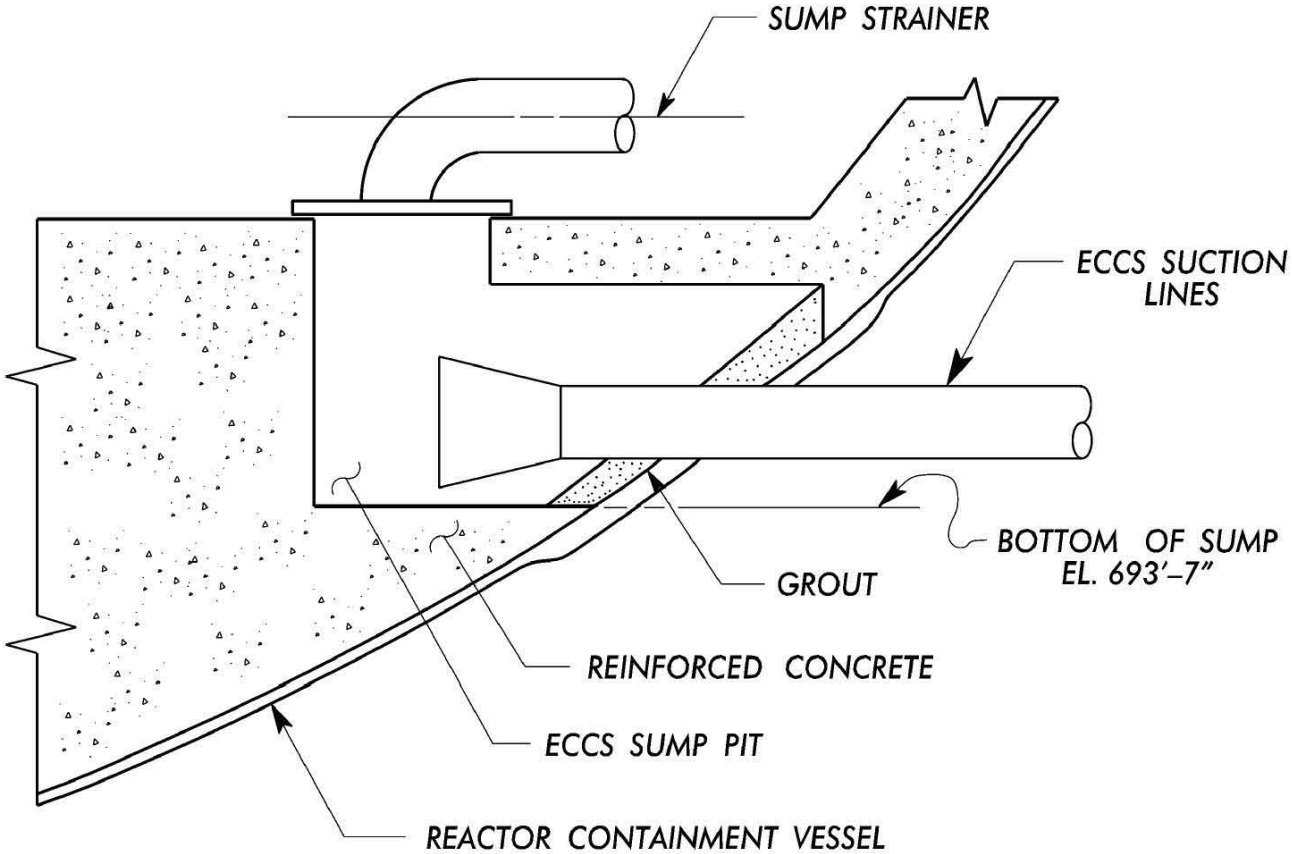

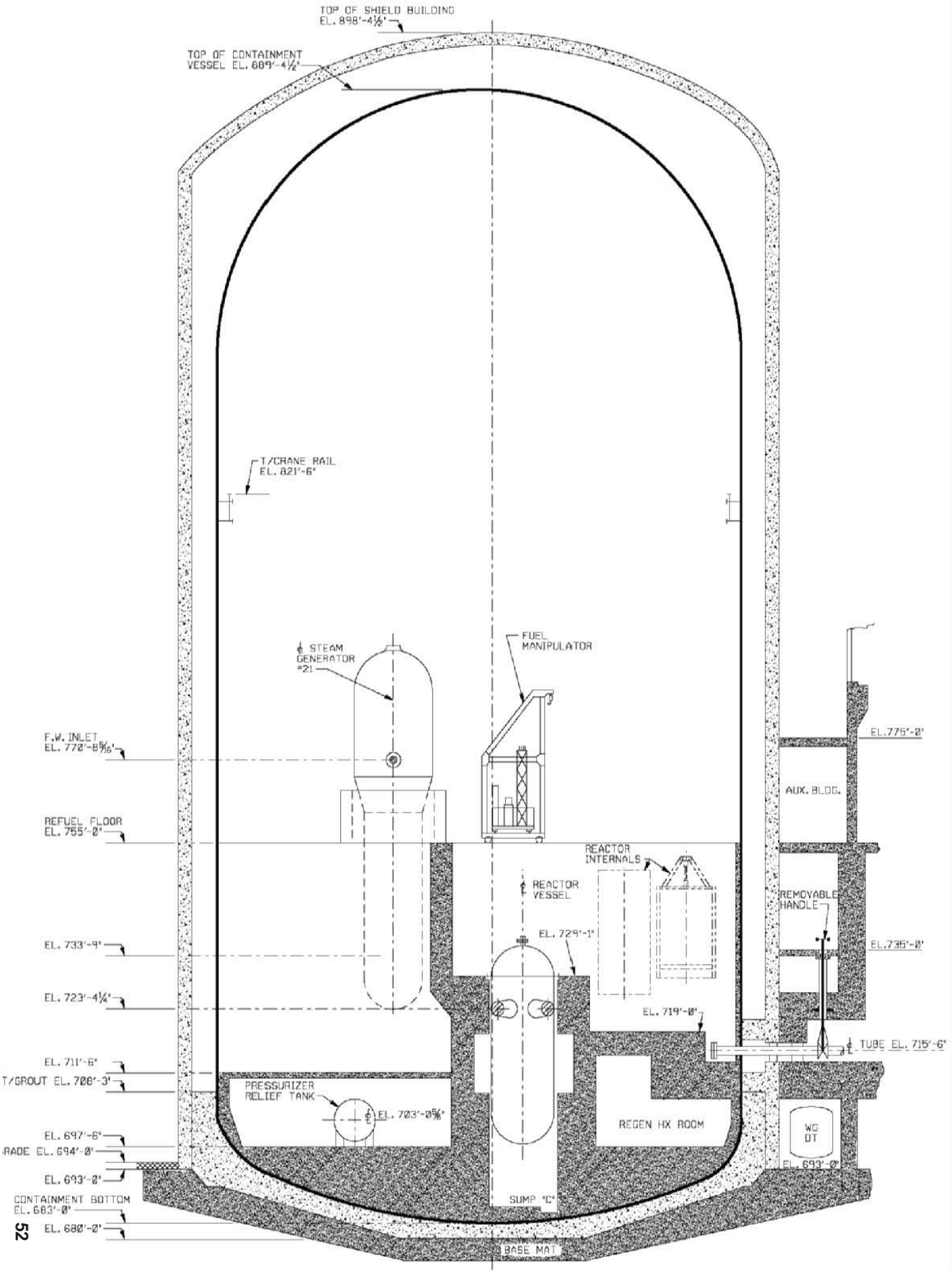
TOP OF SHIELD BUILDING
EL. 898'-4½'
TOP OF CONTAINMENT
VESSEL EL. 889'-4½'
T/CRANE RAIL
EL. 821'-6"
℄ STEAM
GENERATOR
#21
FUEL
MANIPULATOR
F.W. INLET
EL. 770'-8 5/16'
REFUEL FLOOR
EL. 755'-0"
EL.775'-0'
AUX. BLDG.
REACTOR
INTERNALS
℄ REACTOR
VESSEL
REMOVABLE
HANDLE
EL. 729'-1"
EL. 733'-9"
EL.735'-0'
EL. 723'-4¼'
EL. 719'-0"
℄ TUBE EL. 715'-6"
EL. 711'-6"
T/GROUT EL. 708'-3'
PRESSURIZER
RELIEF TANK
℄ EL. 703'-0⅝"
REGEN HX ROOM
WG
DT
EL. 697'-6"
RADE EL. 694'-0'
EL. 693'-0"
EL. 693'-0'
CONTAINMENT BOTTOM
EL. 683'-0"
SUMP "C"
EL. 680'-0"
BASE MAT