9321-F-2735

REFERENCE DRAWINGS: U.E. & C. NO.

RCS- -REACTOR COOLANT SYSTEM -----9321-F-2738
CVSC -CHEMICAL AND VOLUME CONTROL SYSTEM
SHEET #1. ------9321-F-2736
SHEET #2. ------9321-F-2737
SHEET #3. ------9321-F-2737
ACS- -AUXILIARY COOLANT SYSTEM ----9321-F-2720
SS- -SAMPLING SYSTEM ------9321-F-2745
WDS- -WASTE DISPOSAL SYSTEM
SHEET #1. ------9321-F-2719
SHEET #2. ------9321-F-2730
IVSWS-ISOLATION VALVE SEAL WATER SYS.---9321-F-2746
N2- -NITROGEN TO NUCLEAR EQUIPMENT - 9321-F-2723
TEMPERATURE STRAINER TABULATION --9321-H-2739

REFERENCES:

1. PROCESS FLOW DIAGRAM DWG.541-F-154
2. DEFINITION OF SYMBOLS
   E SPEC. G675176 REV.2 AND
   E. SPEC. G675164 REV. 0
3. INSTALLATION OF INSTRUMENTATION
   PROC. SPEC. CAP.-294367 REV.1
4. MATERIAL SPEC. PIPE AND FITTINGS
   E. SPEC G569866 REV. 2 AND
   E. SPEC G676398 REV. 0

NOTES:

A. PIPING IS SCHEDULE 140
B. LOCATE IN HIGH SIDE OF PIPE IN LOCAL HIGH POINT.
D. ORIFICE IS SUPPLIED WITH PUMP PACKAGE.
E. MOUNT WITH STEM HORIZONTAL
F. BALANCE PISTON FLOW LINE FOR S.I.PUMP #22 MUST BE INSIDE VALVES 887A & B.
G. LOCAL NITROGEN BOTTLE STATION - SEE DWG. 9321-F-2723.
H. LOCATE AT LOW POINT OF PIPE WORK.
J. INSTALL VALVES FOR FOR VERTICAL DISCHARGE.
K. FLUSH LINE TO BE INSTALLED AS CLOSE TO VALVE INLET AS POSSIBLE
L. HEAT TREATING TO CONTINUE APPROXIMATELY ONE FOOT PAST THE JUNCTURE.
M. *** INDICATES CONTROL VALVE HAS ADDITIONAL ASSOCIATED CONTROL EQUIPMENT & IS REPRESENTED ON CONTROL VALVE HOOK-UP DETAIL DWG. 9321-F-7056.
N. ALL BORIC ACID HEAT TRACE CIRCUITS HAVE BEEN DISCONNECTED. RWST FREEZE PROTECTION CIRCUITS REMAIN ENERGIZED.

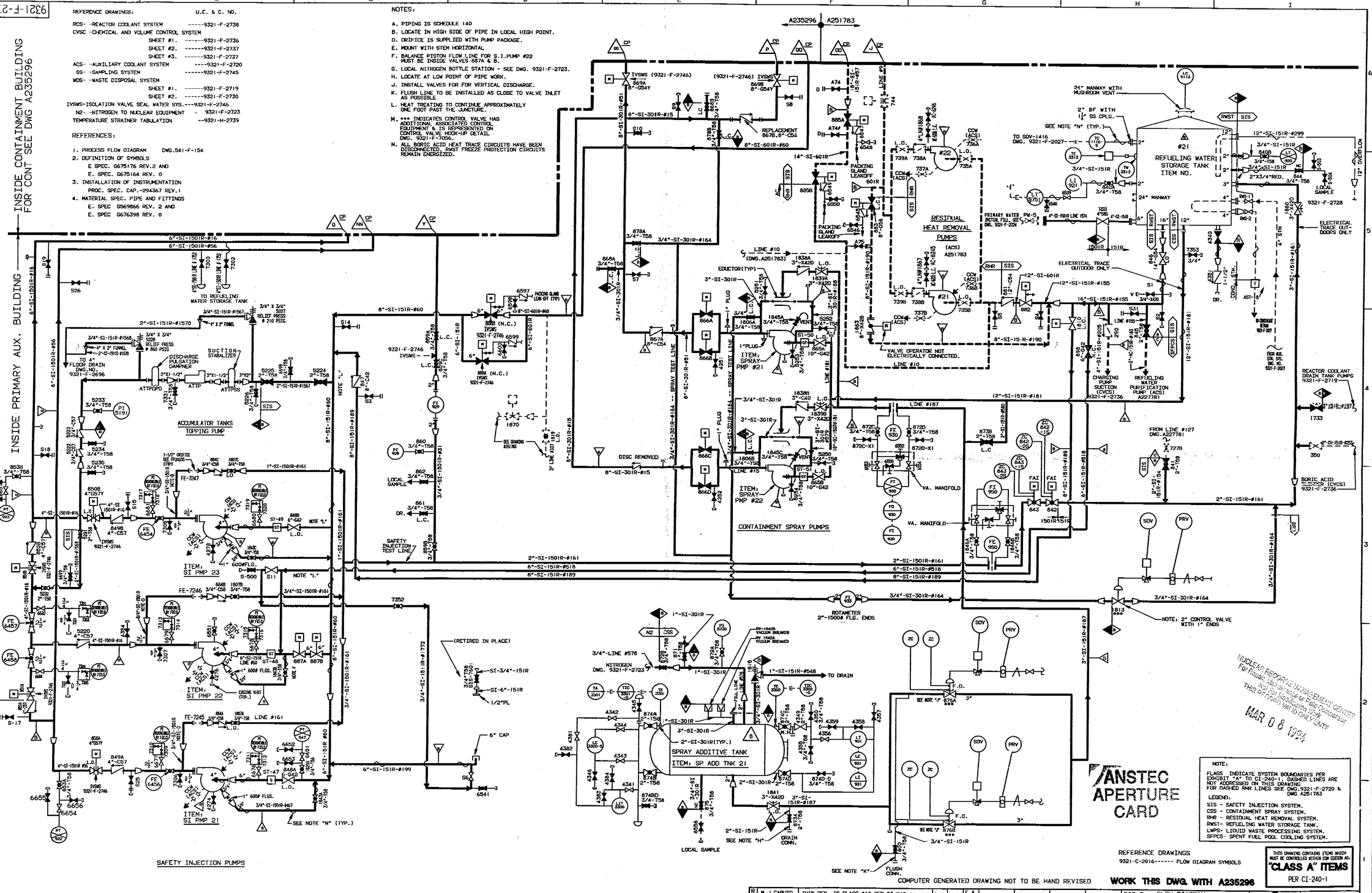

NOTE:
FLAGS INDICATE SYSTEM BOUNDARIES PER EXHIBIT "A" TO CI-240-1. DASHED LINES ARE NOT ADDRESSED ON THIS DRAWING FOR DASHED RHR LINES SEE DWG.9321-F-2720 & DWG A251763

LEGEND:
SIS - SAFETY INJECTION SYSTEM.
CSS - CONTAINMENT SPRAY SYSTEM.
RHR - RESIDUAL HEAT REMOVAL SYSTEM.
RWST- REFUELING WATER STORAGE TANK.
LMPS- LIQUID WASTE PROCESSING SYSTEM.
SFPCS- SPENT FUEL POOL COOLING SYSTEM.

REFERENCE DRAWINGS
9321-C-2016------ FLOW DIAGRAM SYMBOLS

THIS DRAWING CONTAINS ITEMS WHICH MUST BE CONTROLLED WITHIN CON EDISON AS: "CLASS A' ITEMS PER CI-240-1

COMPUTER GENERATED DRAWING NOT TO BE HAND REVISED

WORK THIS DWG. WITH A235296

ANSTEC APERTURE CARD

NUCLEAR RECORDS MANAGEMENT CENTER
For Regular Microfilming of Records Contact Records Management Work Order
THIS DRAWING MAY BE VARIED ONLY UNTIL
MAR 08 1994

REVISION			
REV	M.J.CAPUTO 12/7/93	THIS REV. IS CLASS "A" PER CI-240-1. UPDATED DWG. TO REFLECT CORRECT "IS" BOUNDRIES. PKG. NO. 8764 P.N. 59911-EI RS/ED	
ENG			

DATE	DWN.	SUPV.	DESIGN MGR.	CHIEF DESIGN ENG.	DISC. ENG.	CND. MGR.
2/12/88	A.G.	F.A.	W.J.KING 2/12/88			

REVIEW — APPROVALS

TITLE: FLOW DIAGRAM
SAFETY INJECTION SYSTEM

Con Edison — STATION: INDIAN POINT

DWN BY: B. JOHN — SCALE: NONE — REQ'D

DWG. NO. 9321-F-2735-101 MY

Docket # 50-247
Accession # 9403310110
Date 3/11/94
Regulatory Docket File
of Ltr