MECHANICAL

9321-F-2027

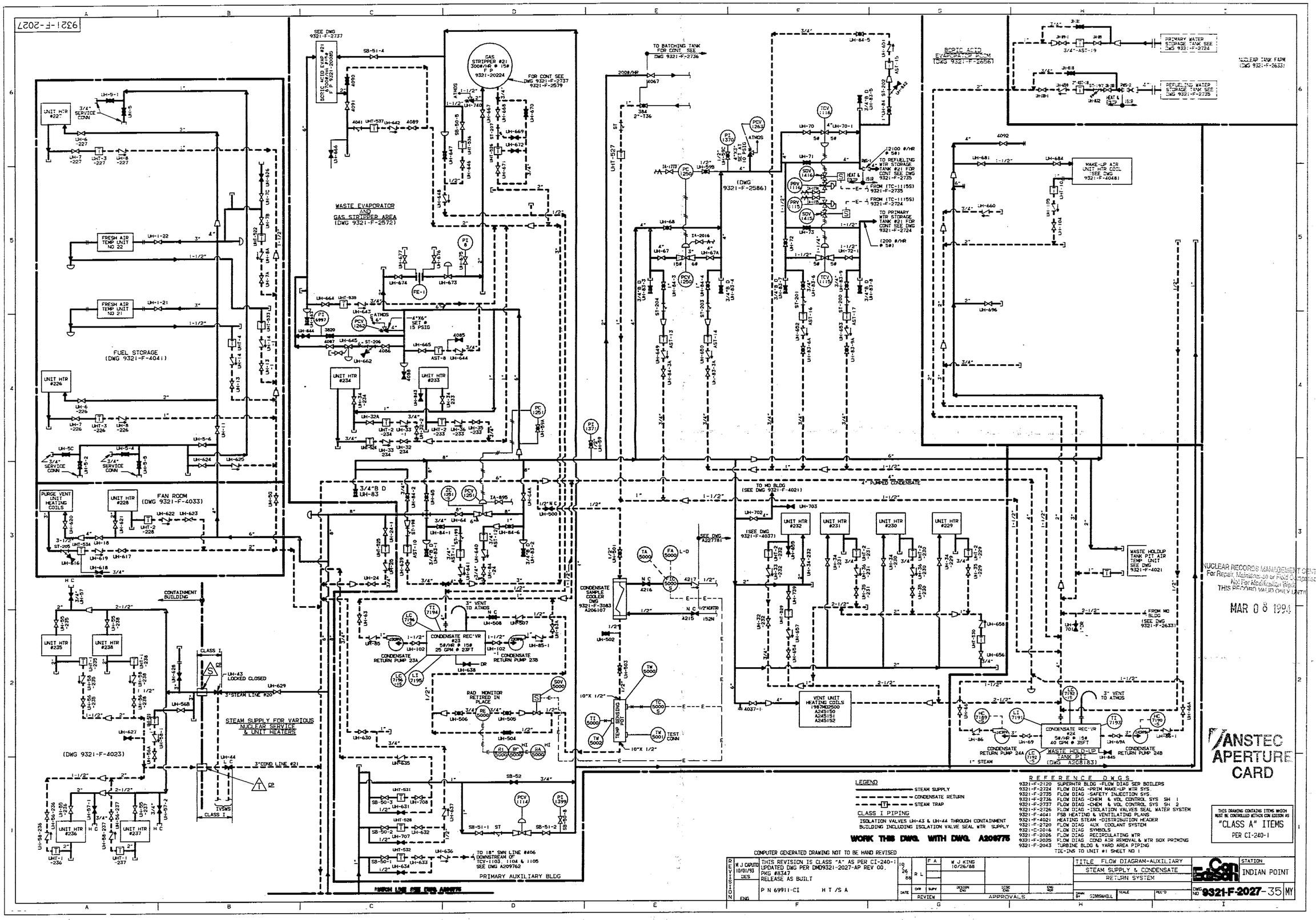

LEGEND

STEAM SUPPLY
CONDENSATE RETURN
STEAM TRAP

CLASS I PIPING

ISOLATION VALVES UH-43 & UH-44 THROUGH CONTAINMENT BUILDING INCLUDING ISOLATION VALVE SEAL WTR SUPPLY

WORK THIS DWG. WITH DWG. A206775

REFERENCE DWGS.

9321-F-2120 SUPERHTR BLDG -FLOW DIAG SER BOILERS
9321-F-2724 FLOW DIAG -PRIM MAKE-UP WTR SYS.
9321-F-2735 FLOW DIAG -SAFETY INJECTION SYS.
9321-F-2736 FLOW DIAG -CHEM & VOL CONTROL SYS SH 1
9321-F-2737 FLOW DIAG -CHEM & VOL CONTROL SYS SH 2
9321-F-2726 FLOW DIAG -ISOLATION VALVES SEAL WATER SYSTEM
9321-F-4041 FSB HEATING & VENTILATING PLANS
9321-F-4021 HEATING STEAM -DISTRIBUTION HEADER
9321-F-2720 FLOW DIAG AUX COOLANT SYSTEM
9321-C-2016 FLOW DIAG SYMBOLS
9321-F-2026 FLOW DIAG RECIRCULATING WTR
9321-F-2025 FLOW DIAG COND AIR REMOVAL & WTR BOX PRIMING
9321-F-2043 TURBINE BLDG & YARD AREA PIPING
TIE-INS TO UNIT #1 SHEET NO 1

THIS DRAWING CONTAINS ITEMS WHICH MUST BE CONTROLLED WITHIN CON EDISON AS "CLASS A" ITEMS PER CI-240-1

COMPUTER GENERATED DRAWING NOT TO BE HAND REVISED

REVISION			
W J CAPUTO 10/01/93 DES	THIS REVISION IS CLASS "A" AS PER CI-240-1 UPDATED DWG PER DMD9321-2027-AP REV 00. PKG #8347 RELEASE AS BUILT	10 26 88	R L
ENG	P N 69911-CI H T /S A		

DATE	DWN	SUPV	DESIGN ENG	STRC ENG	ENG SUPV
10/26/88	F A	R L	W J KING 10/26/88		
REVIEW			APPROVALS		

TITLE FLOW DIAGRAM-AUXILIARY STEAM SUPPLY & CONDENSATE RETURN SYSTEM

DWN BY CIMSAWILL SCALE REC'D

Con Edison

STATION INDIAN POINT

DWG NO. 9321-F-2027-35 MY

NUCLEAR RECORDS MANAGEMENT CENTER
For Repair, Maintenance or Plant Comparison
Not For Modification Work
THIS RECORD VALID ONLY UNTIL
MAR 08 1994

ANSTEC APERTURE CARD

Docket # 50-247
Accession # 9403310120
Date 3/11/94 of Ltr
Regulatory Docket File