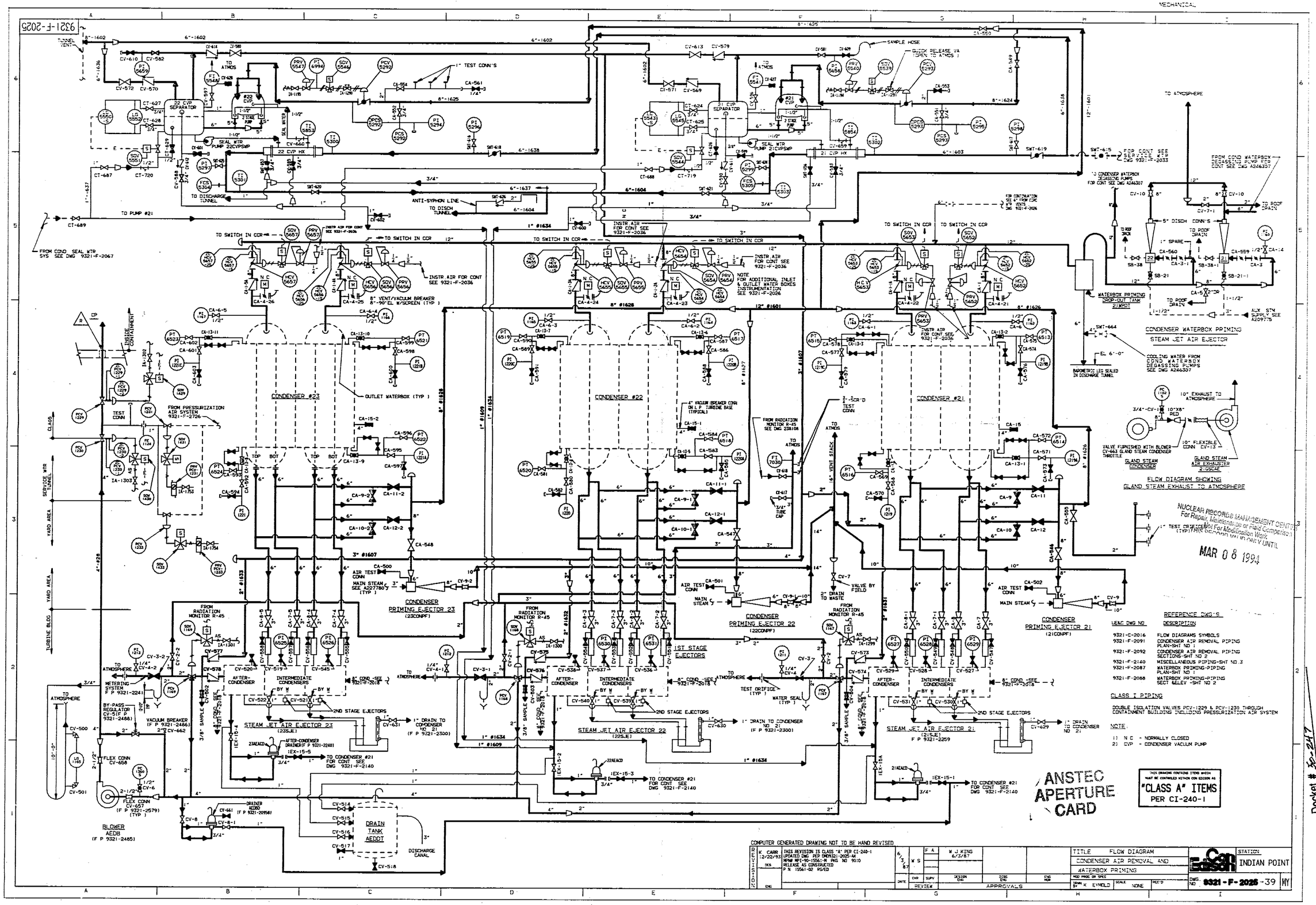
9321-F-2025
MECHANICAL
CONDENSER #23
CONDENSER #22
CONDENSER #21
22 CVP SEPARATOR
21 CVP SEPARATOR
22 CVP HX
21 CVP HX
CONDENSER PRIMING EJECTOR 23 (23CONPF)
CONDENSER PRIMING EJECTOR 22 (22CONPF)
CONDENSER PRIMING EJECTOR 21 (21CONPF)
STEAM JET AIR EJECTOR 23 (23SJE)
STEAM JET AIR EJECTOR 22 (22SJE)
STEAM JET AIR EJECTOR 21 (21SJE)
1ST STAGE EJECTORS
2ND STAGE EJECTORS
AFTER-CONDENSER
INTERMEDIATE CONDENSERS
CONDENSER WATERBOX PRIMING
STEAM JET AIR EJECTOR
FLOW DIAGRAM SHOWING
GLAND STEAM EXHAUST TO ATMOSPHERE
BLOWER AEDB (F P 9321-2485)
DRAIN TANK AEDOT
DISCHARGE CANAL
TO PUMP #21
TO DISCHARGE TUNNEL
ANTI-SYPHON LINE
TO ATMOSPHERE
TO ROOF DRAIN
TO SWITCH IN CCR
FROM COND SEAL WTR SYS SEE DWG 9321-F-2067
FROM PRESSURIZATION AIR SYSTEM 9321-F-2726
FROM RADIATION MONITOR R-45
OUTLET WATERBOX (TYP)
1" TEST CONN'S
SAMPLE HOSE
QUICK RELEASE VA (OPEN TO ATMOS)
INSTR AIR FOR CONT SEE 9321-F-2036
NOTE FOR ADDITIONAL INLET & OUTLET WATER BOXES INSTRUMENTATION SEE 9321-F-2026
8" VENT/VACUUM BREAKER 8"-90°EL W/SCREEN (TYP)
FROM COND WATERBOX DEGASSING PUMPS FCD CONT SEE DWG A246307
TO CONDENSER WATERBOX DEGASSING PUMPS FOR CONT SEE DWG A246307
FCD CONT SEE SERVICE FCD DWG 9321-F-2033
BAROMETRIC LEG SEALED IN DISCHARGE TUNNEL
COOLING WATER FROM COND WATERBOX DEGASSING PUMPS SEE DWG A246307
10" EXHAUST TO ATMOSPHERE
VALVE FURNISHED WITH BLOWER CV-663 GLAND STEAM CONDENSER THROTTLE
GLAND STEAM CONDENSER
GLAND STEAM AIR EXHAUSTER 21GSCAE
NUCLEAR RECORDS MANAGEMENT CENTER For Repair, Reproduction or Film Conversion (TYP) THIS RECORD MAY BE ONLY UNTIL
MAR 08 1994
REFERENCE DWG'S
HEAC DWG NO. DESCRIPTION
9321-F-2016 FLOW DIAGRAMS SYMBOLS
9321-F-2091 CONDENSER AIR REMOVAL PIPING PLAN-SHT NO 1
9321-F-2092 CONDENSER AIR REMOVAL PIPING SECTIONS-SHT NO 2
9321-F-2140 MISCELLANEOUS PIPING-SHT NO 3
9321-F-2087 WATERBOX PRIMING-PIPING PLAN-SHT NO 1
9321-F-2088 WATERBOX PRIMING-PIPING SECT &ELEV -SHT NO 2
CLASS I PIPING
DOUBLE ISOLATION VALVES PCV-1229 & PCV-1230 THROUGH CONTAINMENT BUILDING INCLUDING PRESSURIZATION AIR SYSTEM
NOTE:
1) N C - NORMALLY CLOSED
2) CVP - CONDENSER VACUUM PUMP
ANSTEC APERTURE CARD
"CLASS A" ITEMS PER CI-240-1
COMPUTER GENERATED DRAWING NOT TO BE HAND REVISED
TITLE FLOW DIAGRAM
CONDENSER AIR REMOVAL AND
WATERBOX PRIMING
STATION INDIAN POINT
DWG. NO. 9321-F-2025-39
Docket # 50-247
Accession # 9403310176
Date 3/11/94
Regulatory Docket File