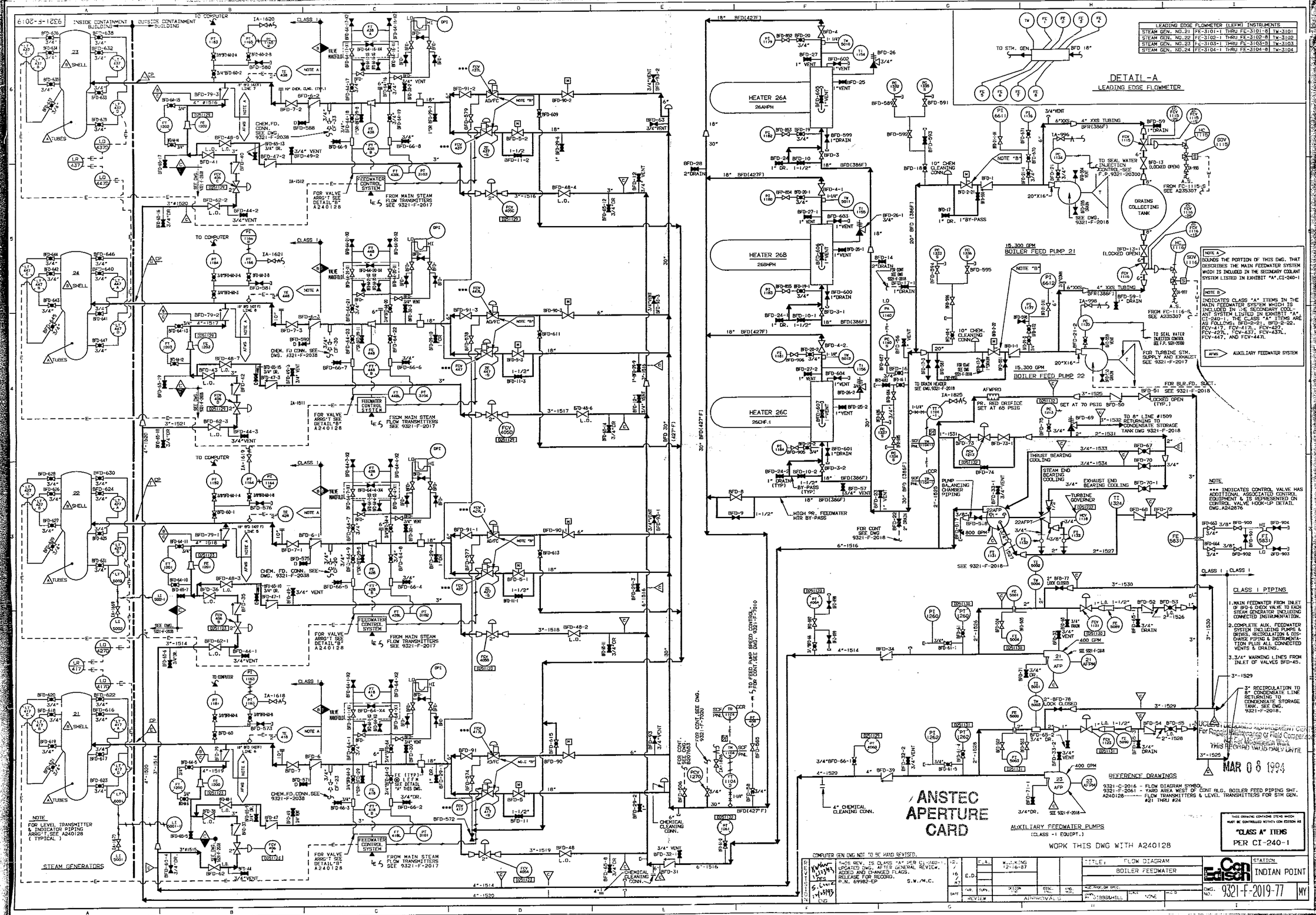

Docket # 50-247
Accession # 2403310170
Date 3/11/94
Regulatory Docket File