A235296

MECH.

CHART-A

ACCUM TANK NO	LT NO	VALVE NOS "C"	"D"	"E"	"F"
21	LT-934A LT-935A	837BB	5275	837DD	5276
22	LT-934B LT-935B	837FF	5277	837HH	5278
23	LT-934C LT-935C	837KK	5279	837MM	5280
24	LT-934D LT-935D	837PP	5281	837SS	5282

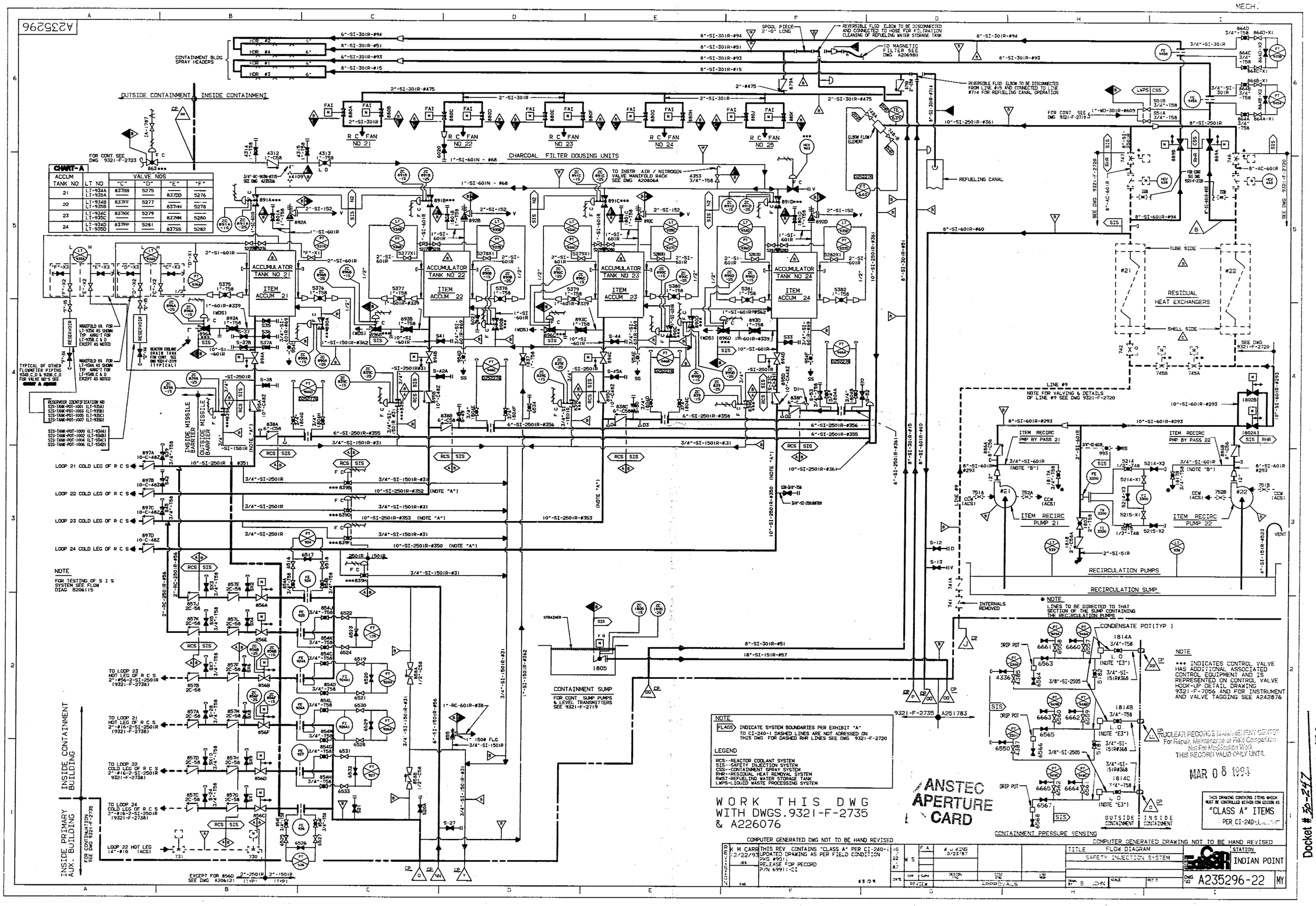

NOTE
FOR TESTING OF S I S SYSTEM SEE FLOW DIAG B206115

NOTE
FLAGS: INDICATE SYSTEM BOUNDARIES PER EXHIBIT "A"
TO CI-240-1 DASHED LINES ARE NOT ADRESSED ON THIS DWG FOR DASHED RHR LINES SEE DWG 9321-F-2720

LEGEND
RCS--REACTOR COOLANT SYSTEM
SIS--SAFETY INJECTION SYSTEM
CSS--CONTAINMENT SPRAY SYSTEM
RHR--RESIDUAL HEAT REMOVAL SYSTEM
RWST-REFUELING WATER STORAGE TANK
LWPS-LIQUID WASTE PROCESSING SYSTEM

WORK THIS DWG WITH DWGS.9321-F-2735 & A226076

ANSTEC APERTURE CARD

NOTE
*** INDICATES CONTROL VALVE HAS ADDITIONAL ASSOCIATED CONTROL EQUIPMENT AND IS REPRESENTED ON CONTROL VALVE HOOK-UP DETAIL DRAWING 9321-F-7056 AND FOR INSTRUMENT AND VALVE TAGGING SEE A242876

NUCLEAR RECORDS MANAGEMENT CENTER
For Repair, Maintenance or Field Comparison
Not For Modification Work
THIS RECORD VALID ONLY UNTIL
MAR 08 1994

THIS DRAWING CONTAINS ITEMS WHICH MUST BE CONTROLLED WITHIN CON EDISON AS "CLASS A" ITEMS PER CI-240-1

COMPUTER GENERATED DWG NOT TO BE HAND REVISED

REV			
10	K M CARR 12/22/93	THIS REV. CONTAINS "CLASS A" PER CI-240-1 UPDATED DRAWING AS PER FIELD CONDITION PKG #9911 RELEASE FOR RECORD P/N 69911-CI	

TITLE	FLOW DIAGRAM SAFETY INJECTION SYSTEM
STATION	INDIAN POINT
DWG NO	A235296-22

Docket # 50-247
Accession # 9423310170
Date 3/11/94 of Ltr
Regulatory Docket File