| ISOMETRIC OF CHEM.4 | INDIAN POINT No 2 |
|---|---|
| VOL. CNTRL LINE No 81 | B-206715 |
| SHEET 1 OF 1 | |

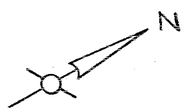


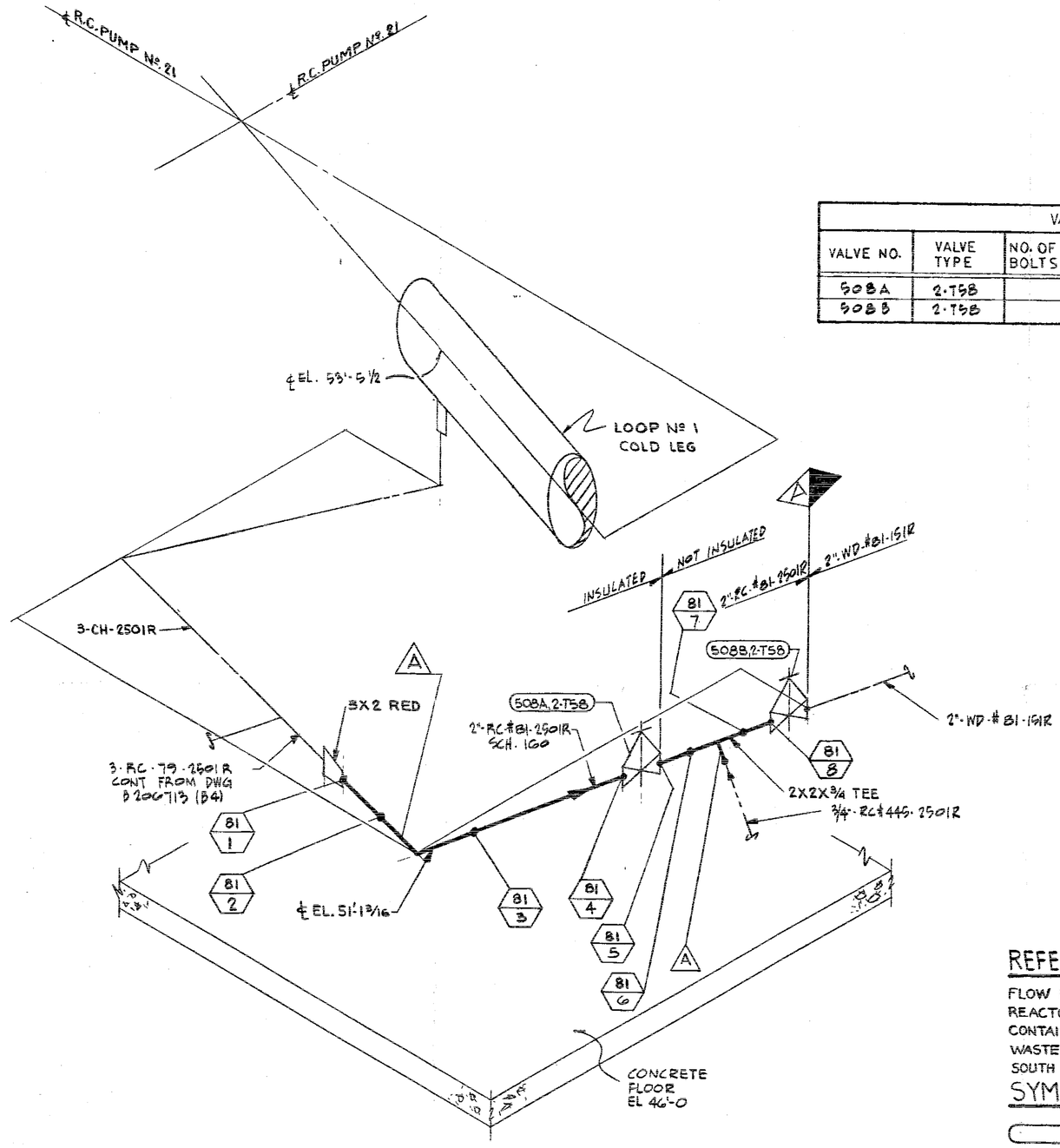


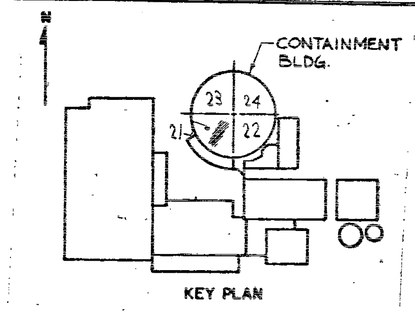


KEY PLAN

| VALVE BONNET BOLTING | | | | | | |
|---|---|---|---|---|---|---|
| VALVE NO. | VALVE TYPE | NO. OF BOLTS | BOLT DIA. | BOLT TYPE | VALVE MANUFACTURER | MANUFACTURER DWG. NO. |
| 508A | 2-T58 | | | | ROCKWELL-EDWARDS | D-464532 |
| 508B | 2-T58 | | | | ROCKWELL-EDWARDS | D-464532 |

NOT FOR FABRICATION OR INSTALLATION

THIS DRAWING CONTAINS ITEMS WHICH MUST BE CONTROLLED WITHIN CON EDISON AS:
"CLASS A" ITEMS
PER CI-240-1

NOT FOR FABRICATION OR INSTALLATION

GENERAL NOTES

1. WELDS LESS THAN 2 1/2" NOM. PIPE DIA. SOCKET WELDED; 2 1/2" AND LARGER BUTT WELDED
2. WELDS IN QUALITY GROUP A PIPING, ONE INCH NOM. PIPE DIA OR LESS, EXEMPT FROM NDT REQUIREMENTS PER IWB-1220(b).
3. (*) INDICATES REMOVABLE INSULATION

TYPICAL WELD DETAIL DRAWINGS
3" CLASS 2501, SCH 160 - D208005

REFERENCE DRAWINGS

FLOW DIAGRAM
REACTOR COOLANT SYSTEM - 9321-F-2738
CONTAINMENT BUILDING
WASTE DISPOSAL SYSTEM
SOUTH HALF - 9321-F-2646

SYMBOL IDENTIFICATION

- VALVE NUMBER
- WELD NUMBER
- QUALITY GROUP CLASSIFICATION
- INTEGRAL SUPPORT WELD NUMBER

REVISIONS

| | |
|---|---|
| 11-3-78 | 0 |
| THIS ISSUE IS NON-CLASS "A" PER CI 240-1. RELEASE FOR RECORD. P.N. 7076 11-3-78 | |
| 1 | |
| THIS REVISION IS NON-CLASS "A" PER CI-240-1. ADDED LATEST REV. No TO REF. DWG'S. RELEASE FOR RECORD PN 7076 MG/AS EBASCO SERVICES, INC. 1-10-80 | |
| 11/26/82 | 2 |
| THIS REVISION IS NON-CLASS "A" PER CI-240-1. ADDED LATEST REV. No TO REF. DWG'S. RELEASE FOR RECORD. P.N. 21368 TREADWELL CORP. 11-12-82. | |
| 5/4/84 | 3 |
| THIS REVISION IS NON-CLASS PER CI-240-1. CHANGED DISCIPLINE CODE FROM MJ TO ML. RELEASE FOR RECORD. P.N. 69911-EI. A.G./ | |
| 2/22/94 | 4 |
| THIS REVISION IS CLASS "A" PER 240-1. UPDATED DWG. PER INSERVICE INSPECTION. FIELD REVISION INFORMATION RELEASE FOR RECORD P.N. 69911-EI J.S. | |

# B206715-4

CONSOLIDATED EDISON CO.
OF NEW YORK, INC.

STATION LOCATION: INDIAN POINT NUMBER 2
INSERVICE INSPECTION ISOMETRIC OF CHEMICAL & VOLUME CONTROL LINE No 81 INSIDE CONTAINMENT

| SCALE | DRAWN BY | RECORDED |
|---|---|---|
| NONE | C. ZAPATA | 11/21/78 |
| P.N. 7076 | CHECKED BY R. BROOKS | ENG |
| DIAG / ELECT | MECH / STRUCT | DIST |

APPROVALS

| | |
|---|---|
| GENERAL ENGINEERING | CHIEF DESIGN ENGINEER |
| MECHANICAL ENGINEERING | MECH PLANT ENGINEER |
| CIVIL ENGINEERING | PLANT STRUCT ENGINEER |
| | T & D STRUCT ENGINEER |
| ELECTRICAL ENGINEERING | STATION ELECT ENGINEER |
| | T & D ENGINEER |
| GAS & STEAM OPERATIONS | STRUCT ENGINEER |
| PRODUCTION | CONVENTIONAL POWER |
| | NUCLEAR POWER |

ML

Docket # 50-247
Accession # 9403110117
Date 2/28/94 of Ltr
Regulatory Docket File

INCHES 0 1 2 3 4 5 6