Summary of Stress Analysis Results for the US-APWR Reactor Coolant Loop Branch Piping

Non-Proprietary Version

July 2010

©2010 Mitsubishi Heavy Industries, Ltd.

All Rights Reserved

Revision History

Revision	Page	Description
0	All	Original Issue
1		Revised analysis condition and result based on following items. a) RHR Return Line (RH05,RH06) is separated from Accumulator Line (SI01,SI02). b) Design transient of Pressurizer Surge Line (RC01), Pressurizer Spray Line (RC02) and Pressurizer Safety Valve Line (RC04) is changed. c) Thermal analysis result is changed responding to detail calculation. Changed description for correction and clarification.
	i,ii,iii,iv,v	Changed page number.
	ii, iii	Added Appendix 1-7, 1-8 and changed number of following Appendix.
	iv	Changed description for clarification. Added Table 8.1-9 and changed following Table number.
	v	Added Figure 1.0-7 ,1.0-8 and changed following Figure number.
	vi	Add Acronyms and changed description for clarification.
	1-1	Added description of RHR Return Line (RH05,RH06) and changed description for clarification.
	1-6 to 1-11	Added Figure 1.0-7, 1.0-8 and changed following Figure number. Charged Figure 1.0-9, 1.0-10 reflecting RHR Return Line separation.
	2-1	Added results of RHR Return Line (RH05,RH06). Changed results reflecting re-calculation.

Revision History (Contd.)

1	3-1	Changed description for clarification.
		Changed description of LBB evaluation.
	4-1	Changed description for clarification.
	5-1	Changed description for correction and clarification.
		Added description about assumption of welding location.
	6-1,6-2	Changed description for clarification.
	7-1	Revised revision number of document.
	8-1	Corrected design temperature and pressure.
	8-2,8-3	Changed description for clarification.
	8-4	Added description of Table 8.1-9 and changed following Table number.
	8-5	Added column of RHR Return Line (RH05,RH06).
		Corrected mark of application of Accidental Load.
	8-6,8-9,8-12,8-15	Changed Remark for clarification.
	8-6	Corrected transient occurrence of Load regulation.
	8-24 to 8-42	Added Table 8.1-9 and changed following Table number.
	9-5	Changed description for clarification.
		Added description about damping which apply to Pressurizer model.
	9-14	Changed description for clarification.
	10-1	Changed version of program.
	11-1	Changed description of LBB evaluation.
	11-2,11-3	Changed results reflecting re-calculation.
	12-1	Revised revision number and corrected document title.
	A1-1-2	Changed description for clarification.
	A1-1-3	Corrected misdescription.
	A1-1-4	Changed piping isometrics reflecting analysis model modification.
	A1-1-6	Corrected support stiffness.
		Added point 9020 for clarification.
		Corrected note about support point.

Revision History (Contd.)

1	A1-1-7	Changed figure of anchor coordinate for clarification.
	A1-1-9 to A1-1-17	Corrected thermal displacement.
		Changed Load No. from CA No. for clarification.
		Corrected Transient title for clarification.
	A1-1-18 to A1-1-24	Corrected transient temperature and Pressure.
		Changed Load No. from CA No. for clarification.
		Added Earthquake Loads for clarification.
	A1-1-25	Corrected Level C,D condition.
	A1-1-40	Changed analysis model.
	A1-1-41,A1-1-42	Changed result of eigenvalue analysis reflecting re-calculation.
	A1-1-43 to A-1-1-45	Changed mode shape reflecting re-calculation.
	A1-1-46 to A1-1-55	Changed result of thermal analysis based on design transient modification.
		Changed Load No. from CA No. for clarification.
		Corrected transient temperature and Pressure.
		Corrected transient occurrence.
		Added Earthquake Loads for clarification.
	A1-1-56	Changed stress analysis results reflecting re-calculation.
	A1-2-2	Changed description for clarification.
	A1-2-5 to A1-2-9	Changed piping isometrics reflecting analysis model modification.
	A1-2-14 to A1-2-16	Changed support stiffness reflecting support modification.
	A1-2-17	Corrected support stiffness.
		Added point 9030 for clarification.
		Corrected note about support point.
	A1-2-18	Changed figure of anchor coordinate for clarification.
	A1-2-20 to A1-2-27	Corrected thermal displacement.
		Changed Load No. from CA No. for clarification.
		Corrected transient temperature.

Revision History (Contd.)

1	A1-2-28 to A1-2-45	Corrected transient temperature.
		Changed Load No. from CA No. for clarification.
		Added Earthquake Loads for clarification.
		Changed piping section applied transient.
	A1-2-46	Corrected Level C,D condition.
		Changed piping section applied transient.
	A1-2-63	Corrected seismic displacement.
		Change of equipment Nozzle or Building.
	A1-2-65	Changed analysis model.
	A1-2-66 to A1-2-71	Changed result of eigenvalue analysis reflecting re-calculation.
	A1-2-72 to A1-2-74	Changed mode shape reflecting re-calculation.
	A1-2-75 to A1-2-152	Changed result of thermal analysis based on design transient modification.
		Changed Load No. from CA No. for clarification.
		Added Earthquake Loads for clarification.
		Corrected transient temperature.
		Corrected transient occurrence.
		Changed piping section applied transient.
	A1-2-153 to A1-2-154	Changed stress analysis results reflecting re-calculation.
	A1-3-2	Changed description for clarification.
	A1-3-3 to A1-3-5	Changed description for clarification.
		Changed piping section applied transient.
	A1-3-6 to A1-3-8	Changed piping isometrics reflecting analysis model modification.
	A1-3-14 to A1-3-16	Changed support stiffness reflecting support modification.
	A1-3-17,A1-3-18	Corrected support stiffness.
		Changed point 9010 for clarification.
		Corrected note about support point.
	A1-3-19	Changed figure of anchor coordinate for clarification.

Revision History (Contd.)

1	A1-3-21	Changed Load No. from CA No. for clarification.
	A1-3-22 to A1-3-42	Corrected transient temperature and pressure.
		Changed Load No. from CA No. for clarification.
		Corrected Transient title for clarification.
		Added Earthquake Loads for clarification.
	A1-3-43	Corrected Level C,D condition.
	A1-3-55	Corrected seismic displacement.
	A1-3-58	Changed analysis model.
	A1-3-59,A1-3-60	Changed description of Water hammer analysis model.
	A1-3-61 to A1-3-65	Changed result of eigenvalue analysis reflecting re-calculation.
	A1-3-66 to A1-3-68	Changed mode shape reflecting re-calculation.
	A1-3-69 to A1-3-97	Changed result of thermal analysis reflecting detail calculation.
		Changed Load No. from CA No. for clarification.
		Corrected Transient title for clarification.
		Corrected transient temperature and pressure.
		Corrected transient occurrence.
		Added Earthquake Loads for clarification.
	A1-3-99	Changed stress analysis results reflecting re-calculation.
	A1-4-2	Changed description for clarification.
	A1-4-3	Changed description for clarification.
		Changed piping section applied transient.
	A1-4-4	Changed piping isometrics reflecting analysis model modification.
	A1-4-6	Corrected support stiffness.
		Corrected note about support point.
		Changed figure of anchor coordinate for clarification.
	A1-4-8	Changed Load No. from CA No. for clarification.

Revision History (Contd.)

1	A1-4-9 to A1-4-14	Corrected transient temperature.
		Changed Load No. from CA No. for clarification.
		Corrected Transient title for clarification.
		Added Earthquake Loads for clarification.
		Changed piping section applied transient.
	A1-4-15	Corrected Level C,D condition.
		Changed piping section applied transient.
	A1-4-23,A1-4-24	Changed analysis model.
	A1-4-25	Changed description of Water hammer analysis model.
	A1-4-26	Changed result of eigenvalue analysis reflecting re-calculation.
	A1-4-27 to A1-4-29	Changed mode shape reflecting re-calculation.
	A1-4-30 to A1-4-41	Changed result of thermal analysis based on design transient modification.
		Changed Load No. from CA No. for clarification.
		Corrected Transient title for clarification.
		Corrected transient temperature.
		Corrected transient occurrence.
		Added Earthquake Loads for clarification.
		Changed piping section applied transient.
	A1-4-42	Changed stress analysis results reflecting re-calculation.
	A1-5-2	Changed description for clarification.
	A1-5-6, A1-5-7	Changed piping isometrics reflecting analysis model modification.
	A1-5-11	Corrected support stiffness.
		Corrected note about support point.
	A1-5-13	Changed figure of anchor coordinate for clarification.
	A1-5-15 to A1-5-19	Corrected thermal displacement.
		Changed Load No. from CA No. for clarification.
		Corrected Transient title for clarification.
		Corrected transient temperature.

Revision History (Contd.)

1	A1-5-20 to A1-5-52	Corrected transient temperature and Pressure.
		Changed Load No. from CA No. for clarification.
		Corrected Transient title for clarification.
		Added Earthquake Loads for clarification.
	A1-5-53	Corrected Level C,D condition.
	A1-5-61	Change of equipment Nozzle or Building.
	A1-5-64	Changed analysis model.
	A1-5-65,A1-5-66	Changed result of eigenvalue analysis reflecting re-calculation.
	A1-5-67 to A1-5-69	Changed mode shape reflecting re-calculation.
	A1-5-70 to A1-5-110	Changed result of thermal analysis reflecting detail calculation.
		Changed Load No. from CA No. for clarification.
		Corrected Transient title for clarification.
		Corrected transient temperature and Pressure.
		Corrected transient occurrence.
		Added Earthquake Loads for clarification.
	A1-5-112	Changed stress analysis results reflecting re-calculation.
	A1-6-2	Changed description for clarification.
	A1-6-5,A1-6-6	Changed piping isometrics reflecting analysis model modification.
	A1-6-8	Changed support stiffness reflecting support modification.
	A1-6-9	Corrected support stiffness.
		Corrected note about support point.
	A1-6-10	Changed figure of anchor coordinate for clarification.
	A1-6-12 to A1-6-16	Changed Load No. from CA No. for clarification.
	A1-6-17 to A1-6-37	Changed Load No. from CA No. for clarification.
		Added Earthquake Loads for clarification.
	A1-6-38	Corrected Level C,D condition.
	A1-6-46	Change of equipment Nozzle or Building.
	A1-6-48	Changed analysis model.

Revision History (Contd.)

1	A1-6-49,A1-6-50	Changed result of eigenvalue analysis reflecting re-calculation.
	A1-6-51 to A1-6-53	Changed mode shape reflecting re-calculation.
	A1-6-54 to A1-6-82	Changed result of thermal analysis reflecting detail calculation.
		Changed Load No. from CA No. for clarification.
		Added Earthquake Loads for clarification.
	A1-6-84	Changed stress analysis results reflecting re-calculation.
	A1-7-1	Added Appendix 1-7 along with RHR Return A Line (RH05) separation.
	A1-8-1	Added Appendix 1-8 along with RHR Return B Line (RH06) separation.
	Whole of Appendix 1-9	Changed number of Appendix and associated page number, Table number and Figure number.
	A1-9-2	Changed description for clarification.
	A1-9-3	Changed piping section applied transient.
	A1-9-4	Changed piping isometrics reflecting analysis model modification.
	A1-9-6	Changed support stiffness reflecting support modification.
		Corrected support stiffness.
		Corrected note about support point.
	A1-9-7	Changed figure of anchor coordinate for clarification.
	A1-9-9 to A1-9-12	Corrected thermal displacement.
		Changed Load No. from CA No. for clarification.
		Corrected Transient title for clarification.
		Corrected transient temperature.
	A1-9-13 to A1-9-24	Corrected transient temperature and Pressure.
		Changed Load No. from CA No. for clarification.
		Corrected Transient title for clarification.
		Added Earthquake Loads for clarification.
		Changed piping section applied transient.
	A1-9-25	Corrected Level C,D condition.
		Changed piping section applied transient.

Revision History (Contd.)

1	A1-9-29 to A1-9-31	Changed Floor response curve.
	A1-9-32	Change of equipment Nozzle or Building.
	A1-9-34	Changed analysis model.
	A1-9-35	Changed result of eigenvalue analysis reflecting re-calculation.
	A1-9-36 to A1-9-38	Changed mode shape reflecting re-calculation.
	A1-9-39 to A1-9-48	Changed result of thermal analysis reflecting detail calculation.
		Changed Load No. from CA No. for clarification.
		Corrected Transient title for clarification.
		Corrected transient temperature and Pressure.
		Corrected transient occurrence.
		Added Earthquake Loads for clarification.
		Changed piping section applied transient.
	A1-9-49	Changed stress analysis results reflecting re-calculation.
	A1-9-51	Added LBB evaluation results.
	Whole of Appendix A1-10	Changed number of Appendix and associated page number, Table number and Figure number.
	A1-10-2	Changed description for clarification.
	A1-10-3	Changed piping section applied transient.
	A1-10-4	Changed piping isometrics reflecting analysis model modification.
	A1-10-6	Changed support stiffness reflecting support modification.
		Corrected support stiffness.
		Corrected note about support point.
	A1-10-7	Changed figure of anchor coordinate for clarification.
	A1-10-9 to A1-10-12	Corrected thermal displacement.
		Changed Load No. from CA No. for clarification.
		Corrected Transient title for clarification.
		Corrected transient temperature.

Revision History (Contd.)

1	A1-10-13 to A1-10-24	Corrected transient temperature and Pressure.
		Changed Load No. from CA No. for clarification.
		Corrected Transient title for clarification.
		Added Earthquake Loads for clarification.
		Changed piping section applied transient.
	A1-10-25	Corrected Level C,D condition.
		Changed piping section applied transient.
	A1-10-29 to A1-10-31	Changed Floor response curve.
	A1-10-32	Change of equipment Nozzle or Building.
	A1-10-34	Changed analysis model.
	A1-10-35	Changed result of eigenvalue analysis reflecting re-calculation.
	A1-10-36 to A1-10-38	Changed mode shape reflecting re-calculation.
	A1-10-39 to A1-10-48	Changed result of thermal analysis reflecting detail calculation.
		Changed Load No. from CA No. for clarification.
		Corrected Transient title for clarification.
		Corrected transient temperature and Pressure.
		Corrected transient occurrence.
		Added Earthquake Loads for clarification.
		Changed piping section applied transient.
	A1-10-49	Changed stress analysis results reflecting re-calculation.
	A1-10-51	Added LBB evaluation results.
	Whole of Appendix A1-11	Changed number of Appendix and associated page number, Table number and Figure number.
	A1-11-2	Changed description for clarification.
	A1-11-6	Corrected support stiffness.
		Changed point 9010 for clarification.
	A1-11-7	Changed figure of anchor coordinate for clarification.

Revision History (Contd.)

1	A1-11-9 to A1-11-12	Corrected thermal displacement.
		Changed Load No. from CA No. for clarification.
		Corrected Transient title for clarification.
		Corrected transient temperature and Pressure.
	A1-11-13 to A1-11-21	Corrected transient temperature and Pressure.
		Changed Load No. from CA No. for clarification.
		Corrected Transient title for clarification.
		Added Earthquake Loads for clarification.
	A1-11-22	Corrected Level C,D condition.
	A1-11-29	Change of equipment Nozzle or Building.
	A1-11-32	Changed result of eigenvalue analysis reflecting re-calculation.
	A1-11-33 to A1-11-35	Changed mode shape reflecting re-calculation.
	A1-11-36 to A1-11-44	Changed result of thermal analysis reflecting detail calculation.
		Changed Load No. from CA No. for clarification.
		Corrected Transient title for clarification.
		Corrected transient temperature and Pressure.
		Corrected transient occurrence.
		Added Earthquake Loads for clarification.
	A1-11-46	Change stress analysis results refleneing re-calculation.
	Whole of Appendix A1-12	Changed number of Appendix and associated page number, Table number and Figure number.
	A1-12-2	Changed description for clarification.
	A1-12-6	Corrected support stiffness.
		Changed point 9010 for clarification.
	A1-12-7	Changed figure of anchor coordinate for clarification.
	A1-12-9 to A1-12-12	Corrected thermal displacement.
		Changed Load No. from CA No. for clarification.
		Corrected Transient title for clarification.
		Corrected transient temperature and Pressure.

Revision History (Contd.)

1	A1-12-13 to A1-12-21	Corrected transient temperature and Pressure.
		Changed Load No. from CA No. for clarification.
		Corrected Transient title for clarification.
		Added Earthquake Loads for clarification.
	A1-12-22	Corrected Level C,D condition.
	A1-12-29	Change of equipment Nozzle or Building.
	A1-12-32	Changed result of eigenvalue analysis reflecting re-calculation.
	A1-12-33 to A1-12-35	Changed mode shape reflecting re-calculation.
	A1-12-36 to A1-12-44	Changed result of thermal analysis reflecting detail calculation.
		Changed Load No. from CA No. for clarification.
		Corrected Transient title for clarification.
		Corrected transient temperature and Pressure.
		Corrected transient occurrence.
		Added Earthquake Loads for clarification.
	A1-12-46	Changed stress analysis results reflecting re-calculation.
	Whole of Appendix A1-13	Changed number of Appendix and associated page number, Table number and Figure number.
	A1-13-2	Changed description for clarification.
	A1-13-4	Changed piping isometrics reflecting analysis model modification.
	A1-13-5	Changed Concentrated mass of support reflecting support modification.
	A1-13-7	Corrected support stiffness.
		Corrected note about support point.
	A1-13-8	Changed figure of anchor coordinate for clarification.
	A1-13-10 to A1-13-14	Corrected thermal displacement.
		Changed Load No. from CA No. for clarification.
		Corrected transient temperature.
	A1-13-15 to A1-13-30	Corrected transient temperature.
		Changed Load No. from CA No. for clarification.
		Added Earthquake Loads for clarification.

Revision History (Contd.)

1	A1-13-31	Corrected Level C,D condition.
	A1-13-39	Corrected seismic displacement.
		Change of equipment Nozzle or Building.
	A1-13-40	Corrected DBPB displacement.
	A1-13-41	Changed analysis model.
	A1-13-42	Changed result of eigenvalue analysis reflecting re-calculation.
	A1-13-43 to A1-13-45	Changed mode shape reflecting re-calculation.
	A1-13-46 to A1-13-62	Changed result of thermal analysis reflecting detail calculation.
		Changed Load No. from CA No. for clarification.
		Corrected transient temperature.
		Added Earthquake Loads for clarification.
	A1-13-64	Changed stress analysis results reflecting re-calculation.
	Whole of Appendix A1-14	Changed number of Appendix and associated page number, Table number and Figure number.
	A1-14-2	Changed description for clarification.
	A1-14-3	Corrected misdescription.
		Changed piping section applied transient.
	A1-14-4	Corrected piping specification due to omission.
	A1-14-5 to A1-14-7	Changed piping isometrics reflecting analysis model modification.
	A1-14-8	Changed Concentrated mass of support reflecting support modification.
	A1-14-10	Changed support stiffness reflecting support modification.
		Corrected support stiffness.
	A1-14-11	Changed support stiffness reflecting support modification.
		Corrected support stiffness.
		Corrected note about support point.
	A1-14-12	Changed figure of anchor coordinate for clarification.
	A1-14-14 to A1-14-17	Corrected thermal displacement.
		Changed Load No. from CA No. for clarification.
		Corrected transient temperature.

Revision History (Contd.)

1	A1-14-18 to A1-14-44	Corrected transient temperature.
		Changed Load No. from CA No. for clarification.
		Added Earthquake Loads for clarification.
	A1-14-45	Corrected Level C,D condition.
	A1-14-52	Corrected seismic displacement.
	A1-14-53	Change of equipment Nozzle or Building.
	A1-14-55	Changed analysis model.
	A1-14-56	Changed result of eigenvalue analysis reflecting re-calculation.
	A1-14-57 to A1-14-59	Changed mode shape reflecting re-calculation.
	A1-14-60 to A1-14-88	Changed result of thermal analysis reflecting detail calculation.
		Changed Load No. from CA No. for clarification.
		Corrected transient temperature.
		Added Earthquake Loads for clarification.
	A1-14-90	Changed stress analysis results reflecting re-calculation.
	Whole of Appendix A1-15	Changed number of Appendix and associated page number, Table number and Figure number.
	A1-15-2	Changed description for clarification.
	A1-15-3	Changed piping section applied transient.
	A1-15-6	Changed point 9010 for clarification.
		Corrected support stiffness.
	A1-15-7	Changed figure of anchor coordinate for clarification.
	A1-15-9 to A1-15-13	Changed Load No. from CA No. for clarification.
	A1-15-14 to A1-15-31	Corrected transient temperature.
		Changed Load No. from CA No. for clarification.
		Added Earthquake Loads for clarification.
		Changed piping section applied transient.
	A1-15-32	Corrected Level C,D condition.
	A1-15-39	Change of equipment Nozzle or Building.
	A1-15-42	Changed result of eigenvalue analysis reflecting re-calculation.

Revision History (Contd.)

1	A1-15-43 to A1-15-45	Changed mode shape reflecting re-calculation.
	A1-15-46 to A1-15-63	Changed result of thermal analysis reflecting detail calculation.
		Changed Load No. from CA No. for clarification.
		Corrected transient temperature.
		Added Earthquake Loads for clarification.
		Changed piping section applied transient.
	A1-15-64	Changed stress analysis results reflecting re-calculation.
	Whole of Appendix A1-16	Changed number of Appendix and associated page number, Table number and Figure number.
	A1-16-2	Changed description for clarification.
	A1-16-6	Changed point 9010 for clarification.
		Corrected support stiffness.
	A1-16-7	Changed figure of anchor coordinate for clarification.
	A1-16-9 to A1-16-13	Changed Load No. from CA No. for clarification.
	A1-16-14 to A1-16-31	Corrected transient temperature.
		Changed Load No. from CA No. for clarification.
		Added Earthquake Loads for clarification.
	A1-16-32	Corrected Level C,D condition.
	A1-16-39	Change of equipment Nozzle or Building.
	A1-16-42	Changed result of eigenvalue analysis reflecting re-calculation.
	A1-16-43 to A1-16-45	Changed mode shape reflecting re-calculation.
	A1-16-46 to A1-16-63	Changed result of thermal analysis reflecting detail calculation.
		Changed Load No. from CA No. for clarification.
		Corrected transient temperature.
		Added Earthquake Loads for clarification.
	A1-16-64	Changed stress analysis results reflecting re-calculation.
	Whole of Appendix A1-17	Changed number of Appendix and associated page number, Table number and Figure number.
	A1-17-2	Changed description for clarification.

Revision History (Contd.)

1	A1-17-6	Changed point 9010 for clarification.
		Corrected support stiffness.
	A1-17-7	Changed figure of anchor coordinate for clarification.
	A1-17-9 to A1-17-13	Changed Load No. from CA No. for clarification.
	A1-17-14 to A1-17-31	Corrected transient temperature.
		Changed Load No. from CA No. for clarification.
		Added Earthquake Loads for clarification.
	A1-17-32	Corrected Level C,D condition.
	A1-17-39	Change of equipment Nozzle or Building.
	A1-17-42	Changed result of eigenvalue analysis reflecting re-calculation.
	A1-17-43 to A1-17-45	Changed mode shape reflecting re-calculation.
	A1-17-46 to A1-17-63	Changed result of thermal analysis reflecting detail calculation.
		Changed Load No. from CA No. for clarification.
		Corrected transient temperature.
		Added Earthquake Loads for clarification.
	A1-17-64	Changed stress analysis results reflecting re-calculation.
	Whole of Appendix A1-18	Changed number of Appendix and associated page number, Table number and Figure number.
	A1-18-2	Changed description for clarification.
	A1-18-3	Changed piping section applied transient.
	A1-18-6	Change point 9010 for clarification.
		Corrected support stiffness.
	A1-18-7	Changed figure of anchor coordinate for clarification.
	A1-18-9 to A1-18-13	Changed Load No. from CA No. for clarification.
	A1-18-14 to A1-18-31	Corrected transient temperature.
		Changed Load No. from CA No. for clarification.
		Corrected transient temperature.
		Added Earthquake Loads for clarification.
		Changed piping section applied transient.

Revision History (Contd.)

1	A1-18-32	Corrected Level C,D condition.
		Changed piping section applied transient.
	A1-18-39	Change of equipment Nozzle or Building.
	A1-18-42	Changed result of eigenvalue analysis reflecting re-calculation.
	A1-18-43 to A1-18-45	Changed mode shape reflecting re-calculation.
	A1-18-46 to A1-18-63	Changed result of thermal analysis reflecting detail calculation.
		Changed Load No. from CA No. for clarification.
		Corrected transient temperature.
		Added Earthquake Loads for clarification.
		Changed piping section applied transient.
	A1-18-64	Changed stress analysis results reflecting re-calculation.
	A2-3	Changed description for clarification.
	A2-6	Changed description for clarification.
	A2-8	Added description of LBB evaluation result of Accumulator Line.
		Added the description of note.
	A2-10	Added the BAC for Accumulator Line.
	A2-11	Added tabulated BAC points of Accumulator Line.

© 2010

MITSUBISHI HEAVY INDUSTRIES, LTD.

All Rights Reserved

This document has been prepared by Mitsubishi Heavy Industries, Ltd. ("MHI") in connection with the U.S. Nuclear Regulatory Commission's ("NRC") licensing review of MHI's US-APWR nuclear power plant design. No right to disclose, use or copy any of the information in this document, other that by the NRC and its contractors in support of the licensing review of the US-APWR, is authorized without the express written permission of MHI.

This document contains technology information and intellectual property relating to the US-APWR and it is delivered to the NRC on the express condition that it not be disclosed, copied or reproduced in whole or in part, or used for the benefit of anyone other than MHI without the express written permission of MHI, except as set forth in the previous paragraph.

This document is protected by the laws of Japan, U.S. copyright law, international treaties and conventions, and the applicable laws of any country where it is being used.

MITSUBISHI HEAVY INDUSTRIES, LTD.
16-5, Konan 2-chome, Minato-ku
Tokyo 108-8215 Japan

Abstract

This report provides a summary of the stress analyses results of Reactor Coolant Loop (RCL) Branch Piping in accordance with MHI's commitment letter (Reference 11) concerning the content of the Technical Report.

From the results summarized in this report and a review of the component design drawings, it is concluded that the US-APWR RCL Branch Piping satisfies all of the requirements of the Design Specification (Reference 1) for structural integrity, operability, and safety.

Table of Contents

LIST OF TABLES IV

LIST OF FIGURES V

LIST OF ACRONYMS VI

1.0 INTRODUCTION 1-1

2.0 SUMMARY OF RESULTS 2-1

3.0 CONCLUSIONS 3-1

4.0 NOMENCLATURE 4-1

5.0 ASSUMPTIONS AND OPEN ITEMS 5-1

5.1 ASSUMPTIONS 5-1

5.2 OPEN ITEMS 5-1

6.0 ACCEPTANCE CRITERIA 6-1

7.0 DESIGN INPUT 7-1

8.0 LOAD AND LOAD COMBINATIONS 8-1

8.1 LOADINGS 8-1

8.1.1 Design Temperature and Design Pressure 8-1

8.1.2 Sustained Loads 8-1

8.1.3 Thermal Expansion Loads 8-2

8.1.4 Thermal Stratification Loads (for Pressurizer surge line) 8-2

8.1.5 Earthquake Loads 8-3

8.1.6 Fluid Transient Loads 8-3

8.1.7 Design Basis Pipe Break Loads 8-3

8.1.8 Design Transients 8-4

8.2 LOAD COMBINATIONS 8-43

9.0 METHODOLOGY 9-1

9.1 LOGIC DIAGRAM OF EVALUATION 9-1

9.2 STRUCTURAL ANALYSIS.....9-4

9.2.1 Analysis model 9-4

9.2.2 Seismic Analysis Method.....9-5

9.2.3 Time-History Method 9-7

9.3 THERMAL STRESS ANALYSIS 9-8

9.4 STRESS EVALUATION 9-10

9.4.1 Piping that exceeds 1 inch (evaluated according to NB-3650).....9-10

9.4.2 1 inch or smaller piping (evaluated according to NC-3650).....9-13

9.5 FATIGUE EVALUATION 9-14

10.0 COMPUTER PROGRAMS USED 10-1

11.0 ANALYSIS RESULTS.....11-1

12.0 REFERENCES 12-1

APPENDICES

Appendix 1-1 RC01 Pressurizer Surge Line A1-1-1

Appendix 1-2 RC02 Pressurizer Spray Line A1-2-1

Appendix 1-3 RC03 Pressurizer Safety Depressurization Valve Line..... A1-3-1

Appendix 1-4 RC04 Pressurizer Safety Valve Line..... A1-4-1

Appendix 1-5 RH01 RHR Suction Loop A Line..... A1-5-1

Appendix 1-6 RH02 RHR Suction Loop B Line..... A1-6-1

Appendix 1-7 RH05 RHR Return Loop A Line A1-7-1

Appendix 1-8 RH06 RHR Return Loop B Line A1-8-1

Appendix 1-9 SI01 Accumulator Loop A Line A1-9-1

Appendix 1-10 SI02 Accumulator Loop B Line A1-10-1

Appendix 1-11 SI05 DVI A Line A1-11-1

Appendix 1-12 SI06 DVI B Line A1-12-1

Appendix 1-13 CS01 CVCS Charging Line..... A1-13-1

Appendix 1-14 CS02 CVCS Let Down Line A1-14-1

Appendix 1-15 CS04 CVCS Seal Injection A Line A1-15-1

Appendix 1-16 CS05 CVCS Seal Injection B Line A1-16-1

Appendix 1-17 CS06 CVCS Seal Injection C Line A1-17-1

Appendix 1-18 CS07 CVCS Seal Injection D Line A1-18-1

Appendix 2 Leak Before Break Evaluation A2-1

List of Tables

Table 2.0-1	Summary of Most Limiting Results	2-1
Table 4.0-1	Symbol and Definition	4-1
Table 6.0-1	RCL Branch Piping Stress Limits (greater than 1 inch piping)	6-2
Table 6.0-2	RCL Branch Piping Stress Limits (1 inch or smaller piping)	6-4
Table 8.1-1	Design Temperature and Design Pressure	8-1
Table 8.1-2	Application of Accidental Load (Displacement) for each piping system	8-5
Table 8.1-3	Pressurizer surge line design transients	8-6
Table 8.1-4	Pressurizer spray line design transients	8-9
Table 8.1-5	Pressurizer safety depressurization valve line design transients	8-12
Table 8.1-6	Pressurizer safety valve line design transients	8-15
Table 8.1-7	RHRS suction loop A line design transients	8-18
Table 8.1-8	RHRS suction loop B line design transients	8-21
Table 8.1-9	RHRS return line design transients	8-24
Table 8.1-10	Accumulator line design transients	8-27
Table 8.1-11	DVI line design transients	8-30
Table 8.1-12	CVCS charging line design transients	8-33
Table 8.1-13	CVCS let down line design transients	8-37
Table 8.1-14	CVCS seal injection line design transients	8-40
Table 8.2-1	Loadings to be considered for various Load Condition	8-43
Table 10.0-1	Computer Program Description	10-1
Table 11.0-1	RCL Branch Piping Result Summary (greater than 1 inch piping)	11-2
Table 11.0-2	RCL Branch Piping Result Summary (1 inch or smaller piping)	11-3

List of Figures

Figure 1.0-1	RC01 : Pressurizer surge line	1-2
Figure 1.0-2	RC02 : Pressurizer spray line	1-2
Figure 1.0-3	RC03 : Pressurizer safety depressurization valve line	1-3
Figure 1.0-4	RC04 : Pressurizer safety valve line	1-3
Figure 1.0-5	RH01 : RHR suction loop A line	1-4
Figure 1.0-6	RH02 : RHR suction loop B line	1-5
Figure 1.0-7	RH05 : RHR return loop A line	1-6
Figure 1.0-8	RH06 : RHR return loop B line	1-6
Figure 1.0-9	SI01 : Accumulator loop A line	1-7
Figure 1.0-10	SI02 : Accumulator loop B line	1-7
Figure 1.0-11	SI05 : DVI A line	1-8
Figure 1.0-12	SI06 : DVI B line	1-8
Figure 1.0-13	CS01 : CVCS charging line	1-9
Figure 1.0-14	CS02 : CVCS let down line	1-9
Figure 1.0-15	CS04 : CVCS seal injection line (A-RCP)	1-10
Figure 1.0-16	CS05 : CVCS seal injection line (B-RCP)	1-10
Figure 1.0-17	CS06 : CVCS seal injection line (C-RCP)	1-11
Figure 1.0-18	CS07 : CVCS seal injection line (D-RCP)	1-11
Figure 8.1-1	Thermal Stratification Profile	8-2
Figure 9.1-1	Evaluation Logic Diagram (greater than 1 inch piping)	9-2
Figure 9.1-2	Evaluation Logic Diagram (1 inch or smaller piping)	9-3

List of Acronyms

The following list defines the acronyms used in this document.

ABS	Absolute Sum
ACC	Accumulator
APWR	Advanced Pressurized-Water Reactor
ASME	American Society of Mechanical Engineers
BAC	Bounding Analysis Curve
CVCS	Chemical and Volume Control System
DBPB	Design Basis Pipe Break
DVI	Direct Vessel Injection
FRS	Floor Response Spectrum
FW	Feedwater
IC	Inner Concrete
ISM	Independent Support Motion
LBB	Leak-Before-Break
LOCA	Loss-of-Coolant Accident
LOF	Left-out-Force
MCP	Main Coolant Pipe
MS	Main Steam
NPS	Nominal Pipe Size
N/A	Not Applicable
OBE	Operating Basis Earthquake
PZR	Pressurizer
RCL	Reactor Coolant Loop
RCP	Reactor Coolant Pump
RCS	Reactor Coolant System
RHRS	Residual Heat Removal System
RV	Reactor Vessel
SAM	Seismic Anchor Motion
SI	Safety Injection
SG	Steam Generator
SRSS	Square Root Sum of the Squares
SSE	Safe-Shutdown Earthquake
UF	Usage Factor

1.0 INTRODUCTION

This Stress Analysis Technical Report is a non-certified version of the ASME Design Report for the US-APWR RCL Branch Piping that has been prepared to support the US-APWR DCD Review. The content of this report follows the ASME guidelines for Design Reports (Section III Division 1 Appendix C) (Reference 5).

Design loads (pressure, deadweight and seismic inertia loads including loads associated with thermal expansion anchor motion and Seismic Anchor Motion (SAM)) used for pipe stress analysis were computed based on the conditions specified in the Design Specification (Reference 1). The thermal stress specified in NRC Bulletin 88-08 was not considered since the valve system configurations and valve disk position adjustments were made to assure that a thermal oscillation would not be generated as described in DCD 3.12.5.9. As for the pressurizer surge line thermal stratification described in NRC Bulletin 88-11, structural analysis was carried out by setting the thermal stratification profile based on the thermal flow analysis results.

This Technical Report meets the requirements of the ASME Code Section III Division 1 NCA-3551.1 (Reference 5) by providing a summary of results and conclusions based upon detailed analyses that demonstrate the validity of the RCL Branch Piping component to meet the requirements of the Design Specification (Reference 1).

For the design of Class 1 piping (i.e. NB-3600 and NC-3600), the 1992 Edition including the 1992 Addenda of ASME Section III was used as required by 10CFR50.55a (b) (1) (iii).

The scope of this Stress Analysis Report includes the piping systems and components (PSC) of the following RCL Branch Piping whose boundaries are identified in Figures 1.0-1 through 1.0-18. The selection of the RCL Branch Piping is consistent with MHI's intent to complete the Stress Analyses of "Risk Significant" PSCs prior to construction, and to enable NRC's audit during the DCD review phase.

- RC01 Pressurizer Surge Line
- RC02 Pressurizer Spray Line
- RC03 Pressurizer Safety Depressurization Valve Line
- RC04 Pressurizer Safety Valve Line
- RH01 and RH02 RHRS Suction Loop A and B Lines
- RH05 and RH06 RHRS Return Loop A and B Lines
- SI01and SI02 Accumulator Loop A and B Lines
- SI05 and SI06 DVI A and B Lines
- CS01 CVCS Charging Line
- CS02 CVCS Let Down Line
- CS04 through CS07 CVCS Seal Injection A, B, C and D Lines

For each of the above Branch Piping, the Scope of the Report provides the following:

- A Summary of the Specification
- The Loads and Load Combinations

- The structural model of the piping including supports, flanges, valves, equipment and penetrations.
- The results of the piping analysis in accordance with the piping Design Specification (Reference 1)
- A review of the calculated stresses including effects of stress intensification, demonstration of ASME III acceptability, and LBB applicability checks for LBB applied piping

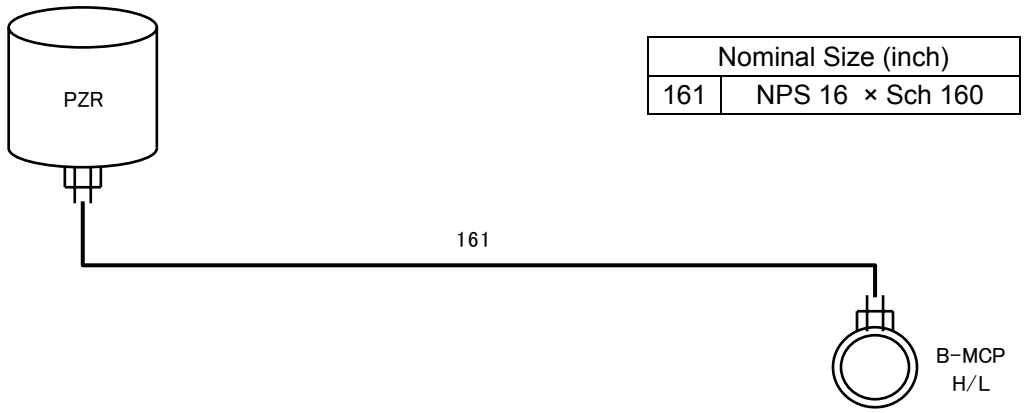

Nominal Size (inch)	
161	NPS 16 × Sch 160

Figure 1.0-1 RC01 : Pressurizer surge line

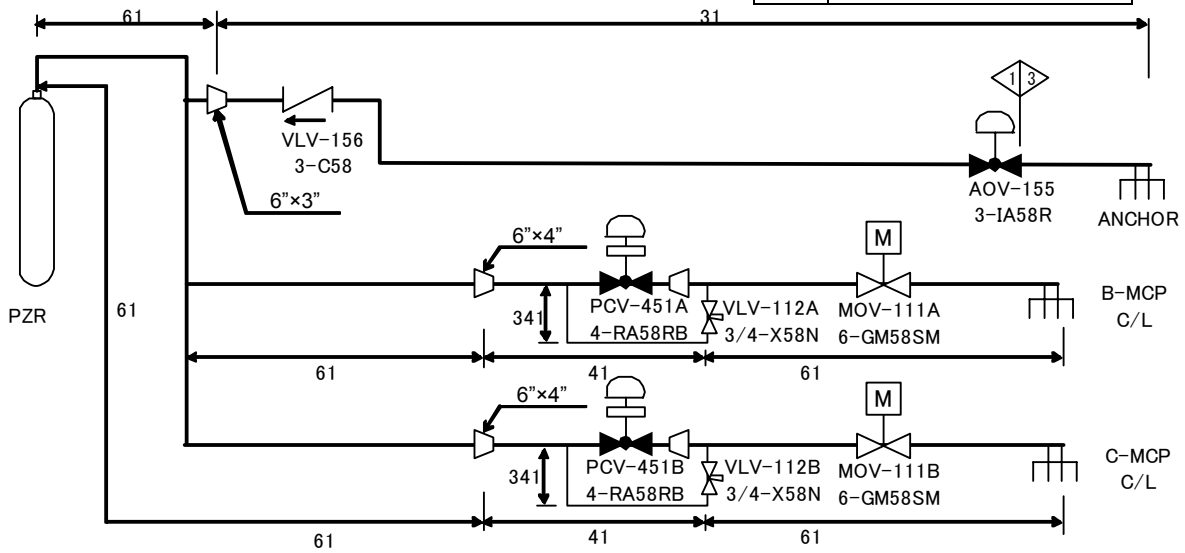

Nominal Size (inch)	
61	NPS 6 × Sch 160
41	NPS 4 × Sch 160
31	NPS 3 × Sch 160
341	NPS 3/4 × Sch 160

Figure 1.0-2 RC02 : Pressurizer spray line

Nominal Size (inch)	
161	NPS 16 × Sch 80
101	NPS 10 × Sch 40
81	NPS 8 × Sch 160
82	NPS 8 × Sch 80
61	NPS 6 × Sch 80
62	NPS 6 × Sch 160
63	NPS 6 × Sch 40
41	NPS 4 × Sch 160
42	NPS 4 × Sch 40

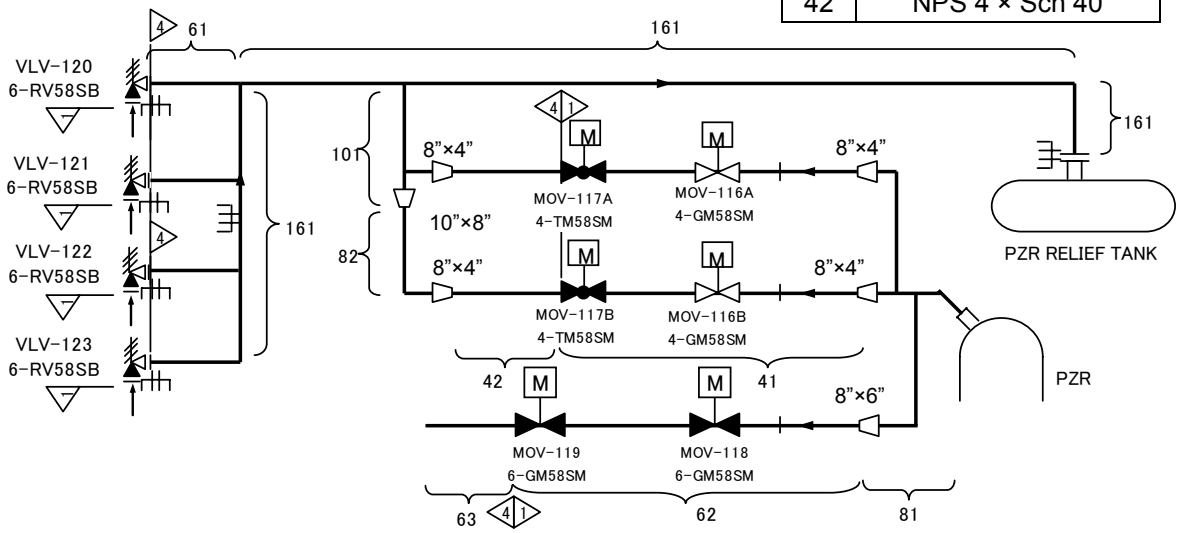

Figure 1.0-3 RC03: Pressurizer safety depressurization valve line

Nominal Size (inch)	
61	NPS 6 × Sch 160

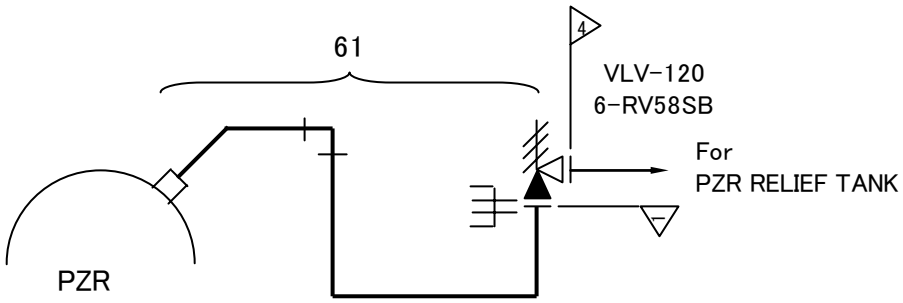

Figure 1.0-4 RC04: Pressurizer safety valve line

Nominal Size (inch)	
101	NPS 10 × Sch 160
102	NPS 10 × Sch 80
81	NPS 8 × Sch 160
61	NPS 6 × Sch 80
41	NPS 4 × Sch 160
21	NPS 2 × Sch 160

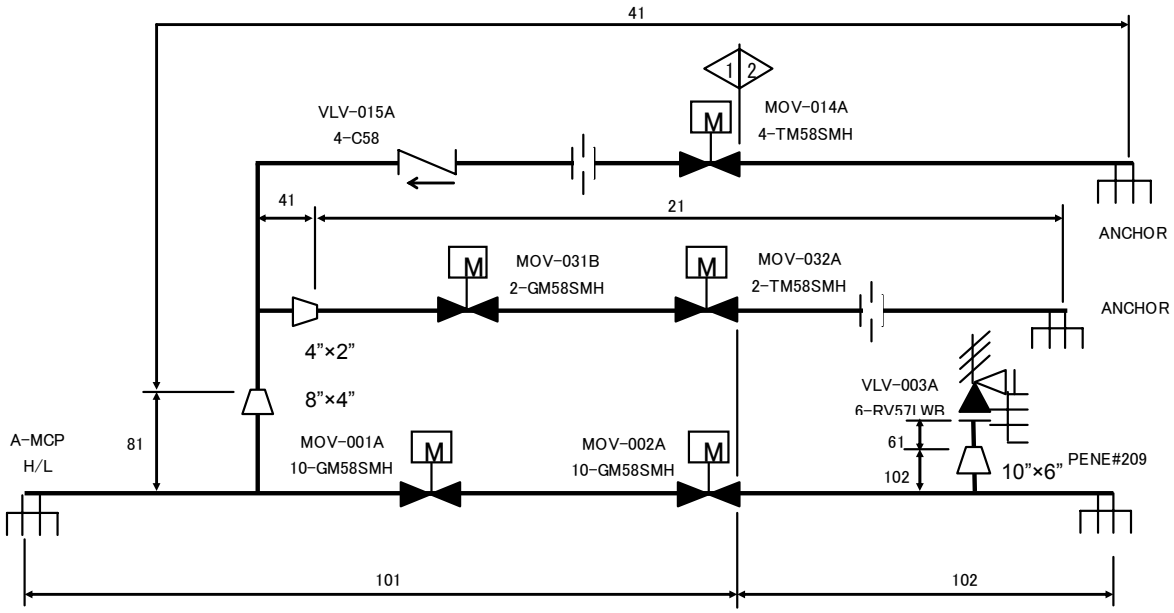

Figure 1.0-5 RH01: RHR suction loop A line

Nominal Size (inch)	
101	NPS 10 × Sch 160
102	NPS 10 × Sch 80
81	NPS 8 × Sch 160
61	NPS 6 × Sch 80
41	NPS 4 × Sch 160

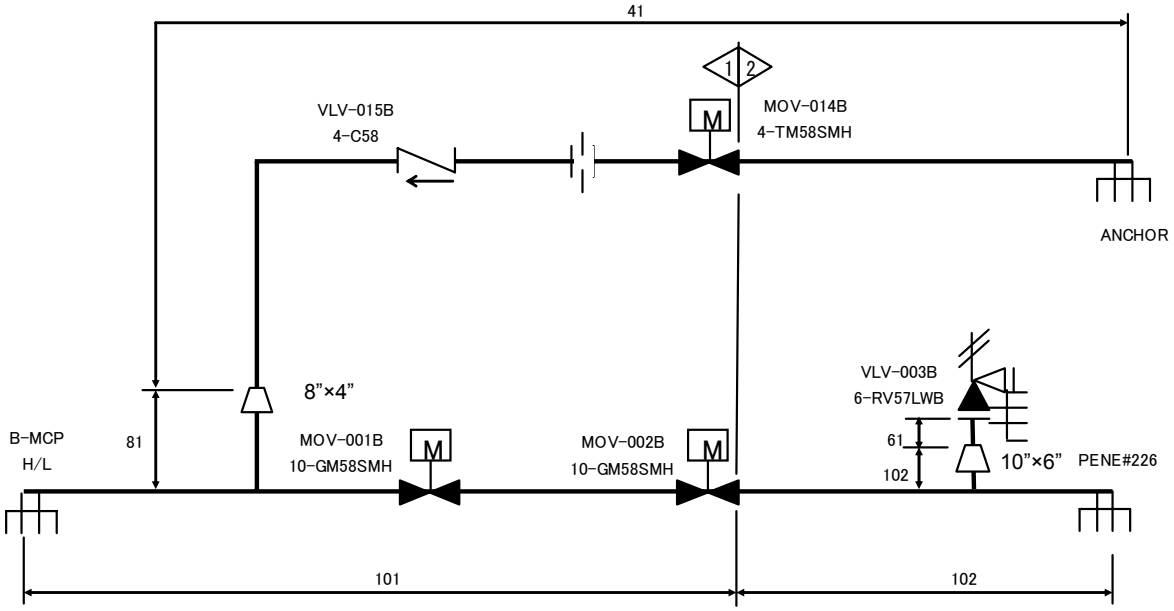

Figure 1.0-6 RH02: RHR suction loop B line

Nominal Size (inch)	
81	NPS 8 × Sch 160
82	NPS 8 × Sch 80
83	NPS 8 × Sch STD
61	NPS 6 × Sch 80

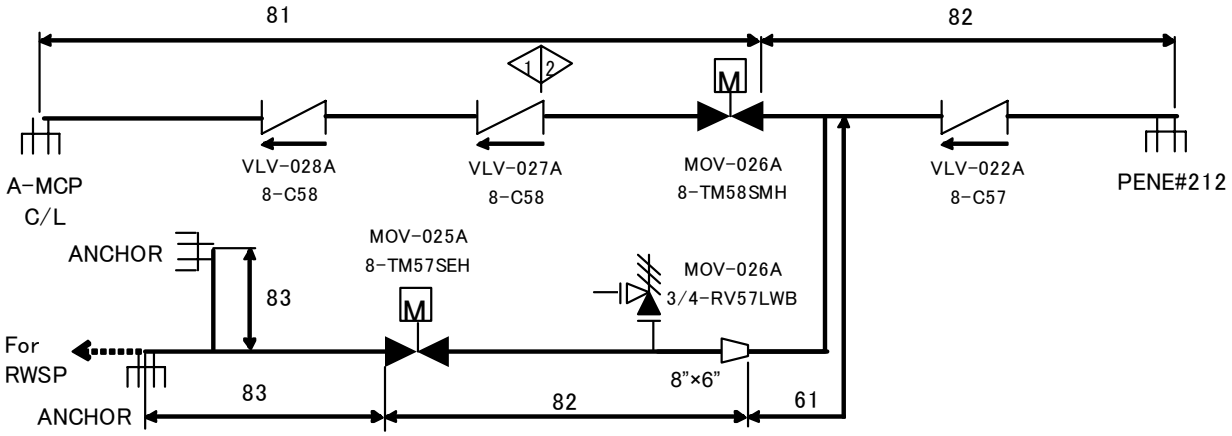

Figure 1.0-7 RH05: RHR return loop A line

Nominal Size (inch)	
81	NPS 8 × Sch 160
82	NPS 8 × Sch 80
83	NPS 8 × Sch STD
61	NPS 6 × Sch 80
41	NPS 4 × Sch 40S

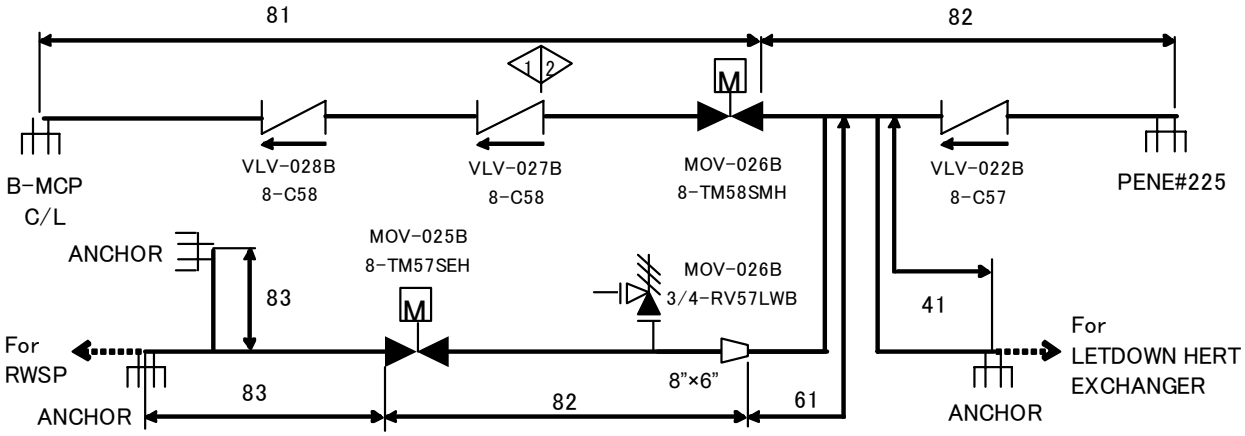

Figure 1.0-8 RH06: RHR return loop B line

Nominal Size (inch)	
141	NPS 14 × Sch 160
142	NPS 14 × Sch XS

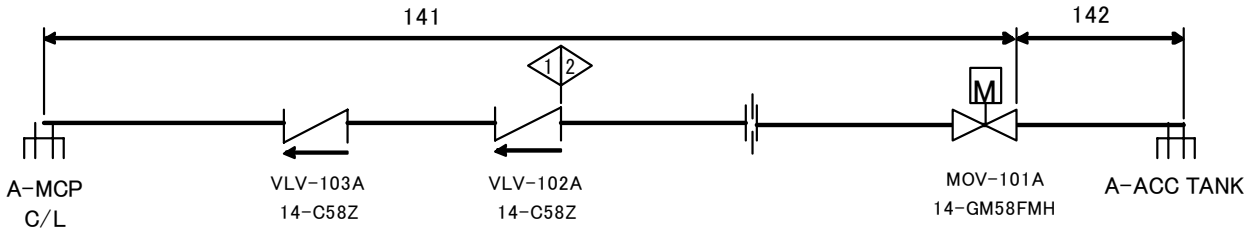

Figure 1.0-9 SI01: Accumulator loop A line

Nominal Size (inch)	
141	NPS 14 × Sch 160
142	NPS 14 × Sch XS

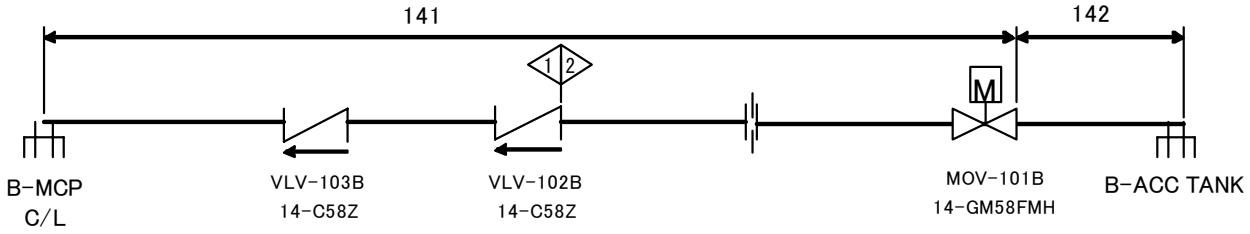

Figure 1.0-10 SI02: Accumulator loop B line

Nominal Size (inch)	
41	NPS 4 × Sch 160

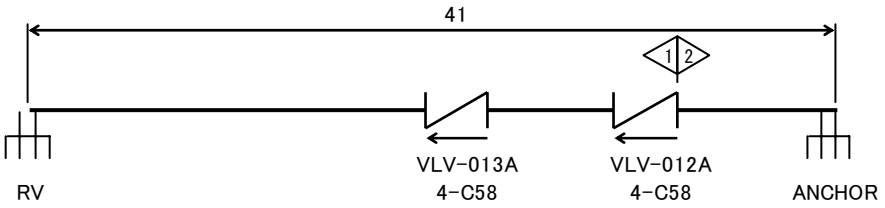

Figure 1.0-11 SI05: DVI A line

Nominal Size (inch)	
41	NPS 4 × Sch 160

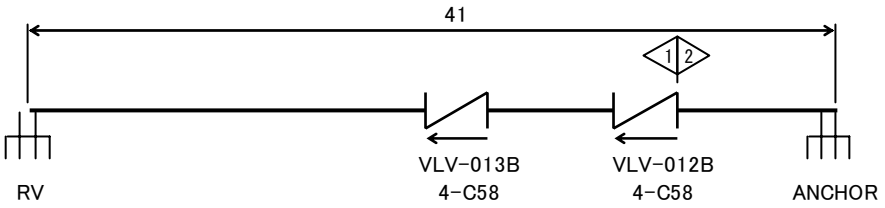

Figure 1.0-12 SI06: DVI B line

Nominal Size (inch)	
41	NPS 4 × Sch 160
341	NPS 3/4 × Sch 160

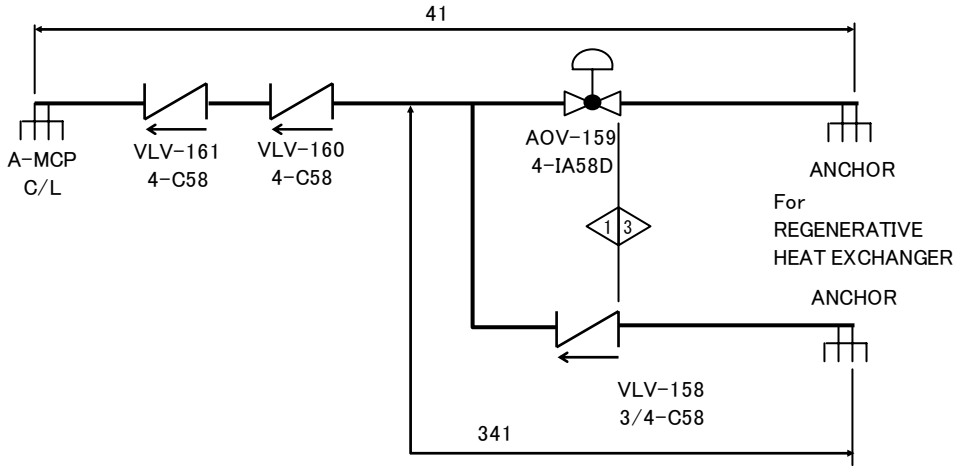

Figure 1.0-13 CS01: CVCS charging line

Nominal Size (inch)	
31	NPS 3 × Sch 160
21	NPS 2 × Sch 160
341	NPS 3/4 × Sch 160
342	NPS 3/4 × Sch 40S

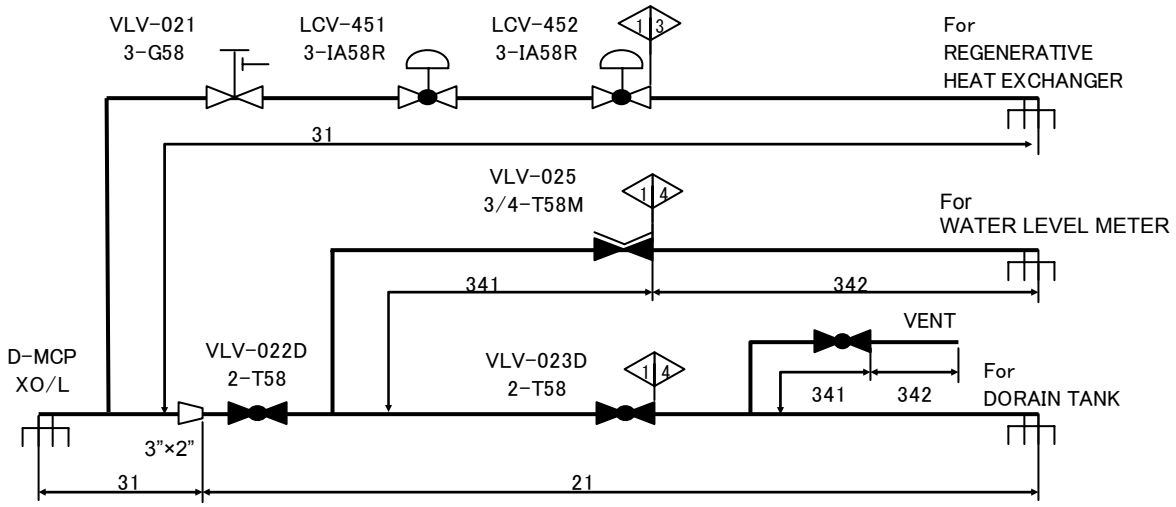

Figure 1.0-14 CS02: CVCS let down line

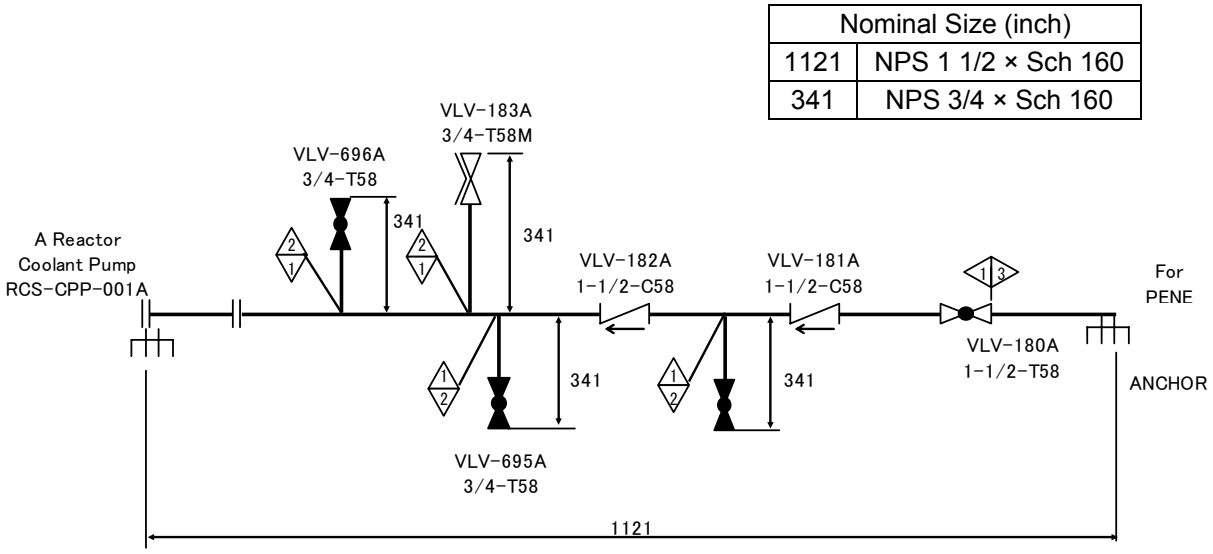

Figure 1.0-15 CS04: CVCS seal injection line (A-RCP)

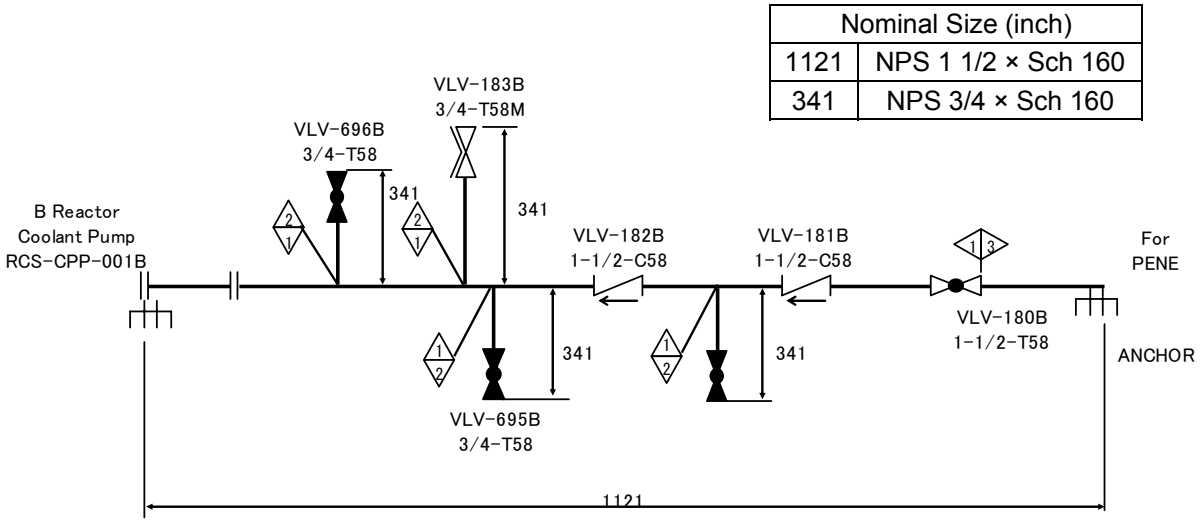

Figure 1.0-16 CS05: CVCS seal injection line (B-RCP)

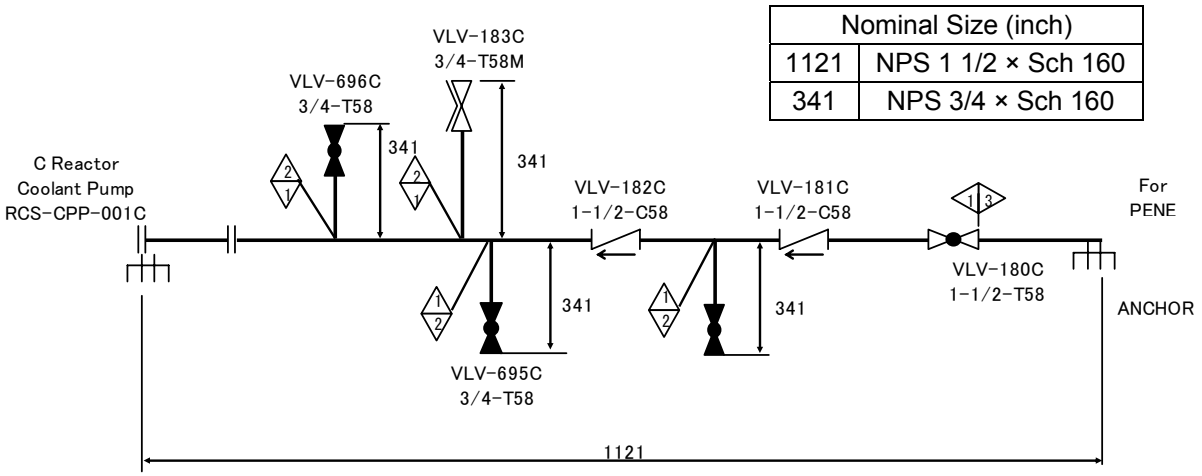

Figure 1.0-17 CS06: CVCS seal injection line (C-RCP)

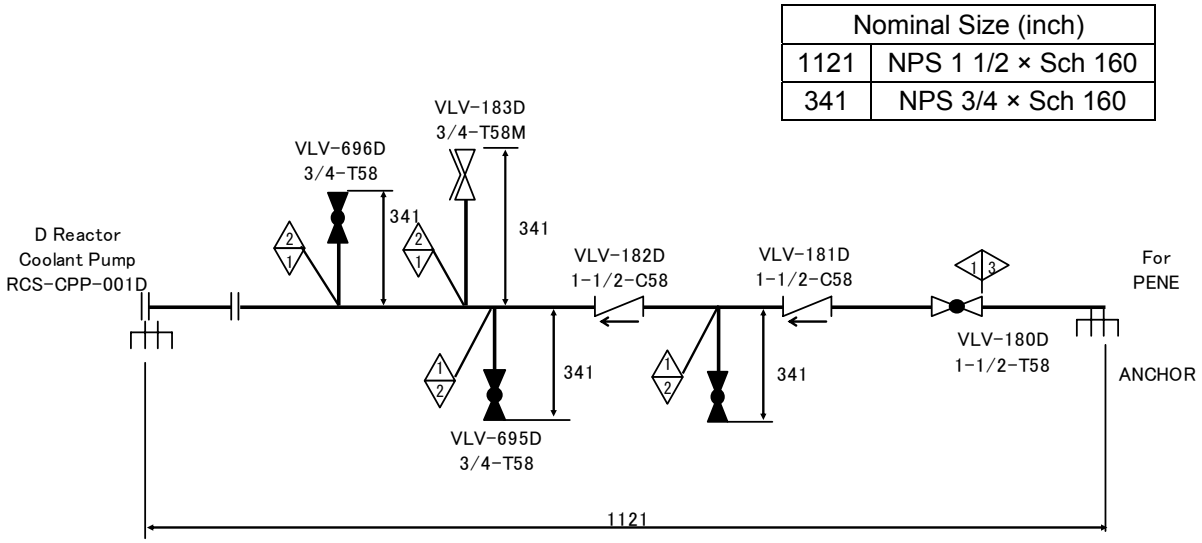

Figure 1.0-18 CS07: CVCS seal injection line (D-RCP)

2.0 SUMMARY OF RESULTS

The structural analysis results for each RCL Branch Piping are summarized in Section 11 and Appendix-1. The most limiting results in each evaluation are listed in Table 2.0-1 below.

Table 2.0-1 Summary of Most Limiting Results

Appendix	Evaluated Part	Max Stress / Allowable Ratio	Highest Fatigue Usage Factor	LBB Evaluation
App. 1-1	RC01 Pressurizer Surge Line			
App. 1-2	RC02 Pressurizer Spray Line			
App. 1-3	RC03 Pressurizer Safety Depressurization Valve Line			
App. 1-4	RC04 Pressurizer Safety Valve Line			
App. 1-5	RH01 RHR Suction Loop A Line			
App. 1-6	RH02 RHR Suction Loop B Line			
App. 1-7	RH05 RHR Return Loop A Line			
App. 1-8	RH06 RHR Return Loop B Line			
App. 1-9	SI01 Accumulator Loop A Line			
App. 1-10	SI02 Accumulator Loop B Line			
App. 1-11	SI05 DVI A Line			
App. 1-12	SI06 DVI B Line			
App. 1-13	CS01 CVCS Charging Line			
App. 1-14	CS02 CVCS Let Down Line			
App. 1-15	CS04 CVCS Seal Injection A Line			
App. 1-16	CS05 CVCS Seal Injection B Line			
App. 1-17	CS06 CVCS Seal Injection C Line			
App. 1-18	CS07 CVCS Seal Injection D Line			

3.0 CONCLUSIONS

The US-APWR RCL Branch Piping was designed to the requirements of the ASME Boiler and Pressure Vessel Code, 1992 Edition including the 1992 Addenda for the Design, Service Loadings, Operating Conditions, and Test Conditions as specified in the Design Specification (Reference 1).

Based on the results summarized in this report, it is concluded that the US-APWR RCL Branch Piping satisfy all of the requirements of the Design Specification (Reference 1) for structural integrity, operability, and safety, and it is confirmed that pressurizer surge line and accumulator loop A and B lines satisfies the LBB criteria using Bounding Analysis Curves (BACs) as described in Appendix 2.

4.0 NOMENCLATURE

Table 4.0-1 Symbol and Definition

Symbol	Unit	Definition
S_m	psi	Design Stress Intensity
S_y	psi	Yield Stress
S_c	psi	Allowable Stress at minimum (cold) temperature
S_h	psi	Allowable Stress at maximum (hot) temperature
S_A	psi	Allowable Stress Range for Expansion Stress
DL	-	Dead Load (The dead weight consists of the weight of the piping, insulation, and other loads permanently imposed upon the piping)
P	-	Design Pressure
P_R	-	Range of Service Pressure
P_M	-	Maximum Service Pressure
TH_{MTL}	-	ASME Service Level A (Normal) and Service Level B (Upset) Miscellaneous Thermal Loads with Thermal Stratification and Thermal Cycling Effects
TH_{DISCON}	-	Thermal Discontinuity Loads
TH_{GRAD}	-	Thermal Radial Gradient Loads
L_{DM}	-	Design Mechanical Loads
L_{DFN}	-	ASME Service Level A (Normal) Dynamic Fluid Loads associated with hydraulic transients such as relief/safety valve opening or water/steam hammer
L_{DFU}	-	ASME Service Level B (Upset) Dynamic Fluid Loads associated with hydraulic transients such as relief/safety valve opening or water/steam hammer
L_{DFE}	-	ASME Service Level C (Emergency) Dynamic Fluid Loads associated with hydraulic transients such as relief/safety valve opening or water/steam hammer
L_{DFF}	-	ASME Service Level D (Faulted) Dynamic Fluid Loads associated with hydraulic transients such as relief/safety valve opening or water/steam hammer
1/3 SSE	-	Design Condition & Level B Service Loading Earthquake (i.e. OBE)
SSEI	-	Safe-Shutdown Earthquake Inertia Loads
SSEA	-	Safe-Shutdown Earthquake Anchor Loads
BS	-	Building Settlement
DBPB	-	Design Basis Pipe Breaks, including LOCA and non-LOCA
LOCA	-	Loss-of-Coolant Accident

5.0 ASSUMPTIONS AND OPEN ITEMS

5.1 ASSUMPTIONS

The basic modeling assumptions derived from the detailed analyses are as follows:

1. Because the valve weight and rigidity have not been set by the valve specifications or the procurer, data was used for a similar valve of the earlier PWR plant.

2. Because the rigidity of supports has not been set by the procurer, the value was set on the basis of a trial design that was consistent with the earlier PWR plant.

3. Because the locations of girth butt welds along straight pipes are to be determined in the detail design phase, local stress indices of girth butt welds are considered in both ends of each bend pipe in addition to all ends of pipe fittings. If the straight pipe length between a bend pipe and other bend pipe or pipe fitting is short enough to manufacture the straight pipe and the bend pipe without welding, the local stress indices at the end of the short straight pipe side of the bend pipe may not be considered.

5.2 OPEN ITEMS

There are no open items in this Technical Report.

6.0 ACCEPTANCE CRITERIA

The stress limits acceptance criteria for RCL Branch piping greater than 1 inch are specified in NB-3650 and for RCL Branch piping equal to 1 inch or smaller are specified in NC-3650 of ASME Section III. Table 6.0-1 lists the stress limits for RCL Branch piping (greater than 1 inch) and Table 6-2 lists the stress limits for RCL Branch piping (1 inch or smaller).

Table 6.0-1 RCL Branch Piping Stress Limits (greater than 1 inch piping)

Condition	Service Level	Category	Loading	Equation (NB-3650)(4)	Stress Limit(4)
Design	-	Primary Stress	P, DL, L_{DM} (including L_{DFN})	Eq. 9 NB-3652	1.5 S_m
Normal /Upset	A/B	Primary + Secondary Stress Intensity Range (SIR)	(3) P_R, TH_{MTL}, TH_{DISCON}, L_{DFN}, L_{DFU}, $SSEI$, $SSEA$	Eq. 10 NB-3653.1	3 S_m
		Peak SIR	P_R, TH_{MTL}, TH_{DISCON}, TH_{GRAD}, L_{DFN}, L_{DFU}, $SSEI$, $SSEA$	Eq. 11 NB-3653.2	
		Thermal Bending SIR	(2) TH_{MTL}	Eq. 12 NB-3653.6(a)	3 S_m
		Primary + Secondary Membrane + Bending SIR	(2) P_R, TH_{DISCON}, L_{DFN}, L_{DFU}, $SSEI$, $SSEA$	Eq. 13 NB-3653.6(b)	3 S_m
		Alternating Stress Intensity (Fatigue)	P_R, TH_{MTL}, TH_{DISCON}, TH_{GRAD}, L_{DFN}, L_{DFU}, $SSEI$, $SSEA$	NB-3653.3 NB-3653.4 NB-3653.5 NB-3653.6(c)	
		Thermal Stress Ratchet	TH_{GRAD} (linear)	NB3653.7	
Upset	B	Permissible Pressure	P_M	NB-3654.1	1.1 Pa
		Primary Stress	P_M, DL, L_{DFU}	NB-3654.2	Min(1.8 S_m,1.5 S_y)
Emergency	C	Permissible Pressure	P_M	NB-3655.1	1.5 Pa
		Primary Stress	P_M, DL, L_{DFE}	NB-3655.2	Min(2.25 S_m,1.8 S_y)
Faulted	D	Permissible Pressure	P_M	NB-3656(b)	2 Pa
		Primary Stress	P_M, DL, L_{DFF}(1), $SSEI$, $DBPB$(1)	NB-3656(a) NB-3656(b)	Appendix-F or Min(3 S_m,2 S_y)
Faulted	D	Secondary Stress	$SSEA$	(5)	6 S_m(5)

Notes:
1. Dynamic loads are to be combined considering timing and causal relationships. SSE and DBPB are combined using the SRSS method.
2. The Thermal and Primary plus Secondary Membrane plus Bending Stress Intensity Ranges (Equations 12 and 13) need only be calculated for those load sets that do not meet the Primary plus Secondary Stress Intensity Range (Equation 10) allowable.
3. The earthquake inertial and anchor movement loads used in the Level B Stress Intensity Range and Alternating Stress calculations (Equations 10, 11, 13 and 14) is taken as 1/3 of the peak SSE inertial and anchor movement loads or as the peak SSE inertial and anchor movement loads. If the earthquake loads are taken as 1/3 of the peak SSE loads then the number of cycles to be considered for earthquake loading is to be 300 as derived in accordance with Appendix D of Institute of Electrical and Electronic Engineers Standard 344-2004 (Reference 6) If the earthquake loads are taken as the peak SSE loads then 20 cycles of earthquake loading is considered. Also, see Note 2.
4. ASME Boiler and Pressure Vessel Code, Section III (Reference 7).

5. $$\frac{C_2 D_o M_{AM}}{2I} \leq 6.0 S_m \text{ and } \frac{F_{AM}}{A_M} \leq S_m$$

where

D_o	= Pipe Outer Diameter
I	= Pipe Moment of Inertia
A_M	= Area of cross-section of the pipe
M_{AM}	= Range of resultant moment due to *SSEA*
F_{AM}	= Amplitude of longitudinal force due to *SSEA*
S_m	= Allowable design stress intensity value

The use of $6S_m$ limit assumes elastic behavior of the entire piping system. In the case of unbalanced systems, the design is modified to eliminate unbalance or the piping is qualified by using an allowable limit of $3S_m$.

Table 6.0-2 RCL Branch Piping Stress Limits (1 inch or smaller piping)

Condition	Service Level	Loading	Equation (NC-3650)	Stress Limit(3)
Design	-	*P, DL*	Eq. 8 NC-3652	1.5 S_h
Normal /Upset	A/B	P_M, *DL*, L_{DFN}, L_{DFU},	Eq. 9 NC-3653.1	Min(1.8 S_h, 1.5 S_y)
		TH_{MTL}	Eq. 10 NC-3653.2(a)	S_A (1)
		BS	Eq. 10a NC-3653.2(b)	$3S_c$
		P_M, *DL*, TH_{MTL}	Eq. 11 NC-3652.2(c)	$S_h + S_A$ (1)
Emergency	C	P_M, *DL*, L_{DFE},	Eq. 9 NC-3654	Min(2.25 S_h,1.8 S_y)
Faulted	D	P_M, *DL*, L_{DFF}, *SSEI*, *DBPB*	Eq. 9 NC-3655	Min(3 S_h, 2 S_y)
		SSEA	(5)	$6S_h$ (5)

Notes:
1. Stresses must meet the requirements of either Equation 10 or 11, not both.
2. If, during operation, the system normally carries a medium other than water (air, gas, steam), sustained loads should be checked for weight loads during hydrostatic testing as well as normal operation weight loads.
3. ASME Boiler and Pressure Vessel Code, Section III(Reference 7)
4. Dynamic loads are combined by the SRSS method.
5. $$\frac{C_2 D_o M_{AM}}{2I} \le 6.0 S_h \text{ and } \frac{F_{AM}}{A_M} \le S_h$$

where

D_o	= Pipe Outer Diameter
I	= Pipe Moment of Inertia
A_M	= Area of cross-section of the pipe
M_{AM}	= Range of resultant moment due to *SSEA*
F_{AM}	= Amplitude of longitudinal force due to *SSEA*
S_h	= Allowable stress value

The use of $6S_h$ limit assumes elastic behavior of the entire piping system. In the case of unbalanced systems, the design is modified to eliminate unbalance or the piping is qualified by using an allowable limit of $3S_h$.

7.0 DESIGN INPUT

The piping was designed based on the design inputs described in the Design Specification (Reference 1) and the documents listed as follows:

1. N0-CF00004 Revision 0 “Piping Design Criteria” (Reference 2)
2. N0-GB00005 Revision 1 ”Input Package of Stress Analysis of RCL Branch Piping and Main Steam Piping” (Reference 3)
3. N0-EE12001 Revision 2 ” Class 1 Equipment Design Transients” (Reference 4)

8.0 LOAD AND LOAD COMBINATIONS

8.1 LOADINGS

8.1.1 Design Temperature and Design Pressure

The Class 1 Piping Design Temperature and Design Pressure are as shown in Table 8.1-1.

Table 8.1-1 Design Temperature and Design Pressure

Design Temperature (°F)	Design Pressure (psi)	Object Part
680	2485	RC01 RC03 RC04
650	2485	RC02 RH01 RH02 RH05 RH06 SI01 SI02 SI05 SI06 CS01 CS02
650 200	2485 2485	CS04 CS05 CS06 CS07

8.1.2 Sustained Loads

The weight of the piping system, its contents, any insulation and in-line equipment, and any other sustained loads identified in the Design Specification (Reference 1) were considered in the piping analysis. The mass contributed by the support was included in the analysis when it was greater than 10% of the total mass of the adjacent pipe span.

8.1.3 Thermal Expansion Loads

The effect of linear thermal expansion range during various operating modes was considered along with thermal movement of terminal equipment nozzles, anchors, or restraints (thermal anchor movements) corresponding to the operating modes. The stress free temperature was taken as 70°F.

8.1.4 Thermal Stratification Loads (for Pressurizer surge line)

The thermal stratification stress was generated by assuming thermal stratification of the pipe fluid and switching from out-surge to in-surge or from in-surge to out-surge.

At the normal condition, thermal stratification does not occur with an initial condition of an 8 gpm out-surge.

When the transient starts with an out-surge condition, thermal stratification will not occur. When the transient starts with an in-surge condition, the thermal stratification will be formed by shifting from the initial condition of an 8 gpm out-surge to in-surge.

When the transient ceases with an in-surge condition, thermal stratification will be formed by shifting to the normal condition of the 8 gpm out-surge. When the transient ceases with an out-surge condition, thermal stratification will not be formed because the out-surge condition is maintained.

The profile of the thermal stratification used in the analysis is shown in Figure 8.1-1.

Figure 8.1-1 Thermal Stratification Profile

8.1.5 Earthquake Loads

The effects of inertial loads and anchor movements due to an SSE are considered as Service Level D loads in the design of piping. Fatigue effects due to earthquake loads are discussed in Section 9.5.

8.1.6 Fluid Transient Loads

The pressurizer safety valve and safety depressurization valve thrust loads are set in motion by the rapid actuation of valves. These loads are functions of valve opening, flow rate, flow area, and fluid properties.

8.1.7 Design Basis Pipe Break Loads

US-APWR has applied the leak-before-break (LBB) methodology. As a result the main coolant piping (MCP) break and surge line break dynamic evaluations were eliminated. The postulated pipe break events that were evaluated for the reactor coolant system branch piping are as follows..

- Hot Leg Branch Line break at the 10 inch Schedule 160 Residual Heat Removal (RHR)/ Safety Injection (SI) line nozzle
- Cold Leg Branch line break at the 14 inch Schedule 160 accumulator line nozzle
- Feedwater Line break at the SG FW nozzle
- Main Steam Line break at the SG MS nozzle

The following components must be protected against mechanical loads due to a LOCA or secondary side pipe rupture (MS line break and FW line break).

a. LOCA

(a) Intact loop including the branch piping and support components.

(b) Intact main coolant pipe leg of the affected loop, SG support components and RCP support components in order to maintain the flow path.

(c) Safety injection line connected to the intact leg of the affected loop in order to maintain safety injection.

(d) MS line and main FW line in order to prevent simultaneous rupture of the secondary side.

b. All of the primary side must be protected against secondary side pipe rupture.

The information for the above types of piping is summarized in Table 8.1-2.
For all of the displacements during accidents marked with “A” in Table 8.1-2, a factor of two margin was conservatively considered for dynamic effects. Forced displacements were assumed at the piping nozzle. Both translational and rotational directions were considered.

8.1.8 Design Transients

The design transient conditions for each system are presented in the tables listed below.

Pressurizer surge line	Table 8.1-3
Pressurizer spray line	Table 8.1-4
Pressurizer safety depressurization valve line	Table 8.1-5
Pressurizer safety valve line	Table 8.1-6
RHR suction loop A line	Table 8.1-7
RHR suction loop B line	Table 8.1-8
RHR return line	Table 8.1-9
Accumulator line	Table 8.1-10
DVI line	Table 8.1-11
CVCS charging line	Table 8.1-12
CVCS let down line	Table 8.1-13
CVCS seal injection line	Table 8.1-14

Table 8.1-2 Application of Accidental Load (Displacement) for each piping system

Evaluated Line	Connected Component	Location of accident									
		Break loop (loop occurred accident)					Intact loop				
		Break at Hot-leg	Break at Cold-leg	RCP rocked rotor	MS break	FW break	Break at Hot-leg	Break at Cold-leg	RCP rocked rotor	MS break	FW break
RC01	Hot-leg, PZR										
RC02	Cold-leg, PZR										
RC03	PZR										
RC04	PZR										
RH01	Hot-leg										
RH02	Hot-leg										
RH05	Cold-leg										
RH06	Cold-leg										
SI01	Cold-leg										
SI02	Cold-leg										
SI05	RV										
SI06	RV										
CS01	Cold-leg										
CS02	Cross-Over-leg										
CS04	RCP										
CS05	RCP										
CS06	RCP										
CS07	RCP										

Table 8.1-3 Pressurizer surge line design transients (1/3)

Level A					
Mark	Transient	Occurrence	Reference		Remark
			Document	Fig. or Table	
I-a	Plant heat-up (100F/h)	120	Ref. 4	Fig. I-1	
I-b-1	Plant cooldown (200F/h, 2235～400psig)	120		Fig. I-2	
I-b-2	Plant cooldown (200F/h, lower than 400psig)	120		Fig. I-2	
I-c-1	Ramp load increase between 15% and 100% of full power (5% of full power per minute)	600		Fig. I-3	
I-c-2	Ramp load increase between 50% and 100% of full power (5% of full power per minute)	19, 200		Fig. I-4	
I-d-1	Ramp load decrease between 15% and 100% of full power (5% of full power per minute)	600		Fig. I-5	
I-d-2	Ramp load decrease between 50% and 100% of full power (5% of full power per minute)	19, 200		Fig. I-6	
I-e	Step load increase of 10% of full power	600		Fig. I-7	
I-f	Step load decrease of 10% of full power	600		Fig. I-8	
I-g	Large step load decrease with turbine bypass	60		Fig. I-9	
I-h	Steady-state fluctuation and load regulation — i) Steady-state fluctuation	1×10^{6}		—	P_p±50psi, Tp±3.1F
	ii) Load regulation	1.6×10^{6}		Table 4	
I-i	Main feedwater cycling	2, 100		Fig. I-10	
I-j	Refueling	60		Fig. I-11	Water is replaced in 10 minutes.
I-k	Ramp load increase between 0% and 15% of full power	600		Fig. I-12	
I-l	Ramp load decrease between 0% and 15% of full power	600		Fig. I-13	
I-m	RCP startup	3, 000		Fig. I-14	
I-n	RCP shutdown	3, 000		Fig. I-15	
I-o	Core lifetime extension	60		Fig. I-16	
I-p	Primary leakage test	120		Fig. I-17	
I-q	Turbine roll test	10		Fig, I-18	
I-r	Boron concentration equalization	39, 600		—	P_p+25psi, Tp+1.4F,-0F

Table 8.1-3 Pressurizer surge line design transients (2/3)

Level B						
Mark	Transient		Occurrence	Reference		Remark
				Document	Fig. or Table	
II-a	Loss of load		60	Ref. 4	Fig. II-1	
II-b	Loss of offsite power		60		Fig. II-2	
II-c	Partial loss of reactor coolant flow		30		Fig. II-3	
II-d	Reactor trip from full power	i) With no inadvertent cooldown	60		Fig. II-4	
		ii) With cooldown and no safety injection	30		Fig. II-5	Including the transient of Excessive feedwater flow
		iii) With cooldown and safety injection	10		Fig. II-6	
II-e	Inadvertent RCS depressurization	i) Umbrella case	30		Fig. II-7	
		ii) Inadvertent auxiliary spray	15		Fig. II-12	
II-f	Control rod drop		30		Fig. II-8	
II-g	Inadvertent safeguards actuation		30		Fig. II-9	
II-h	Emergency feedwater cycling		700		Fig. II-10	
II-i	Cold over-pressure		30		Fig. II-11	
II-j	Excessive feedwater flow		—		—	Be covered with the transient of Reactor trip from full power ii)
II-k	Loss of offsite power with natural circulation cooldown		—		—	Be covered with the transient of Plant cooldown
II-l	Partial loss of emergency feedwater		30		—	Please use the figure of the transient of Loss of offsite power.
II-m	Safe shutdown		—		—	Be covered with the transient of Plant cooldown

Table 8.1-3 Pressurizer surge line design transients (3/3)

Mark	Transient	Occurrence	Reference		Remark
			Document	Fig. or Table	
Level C					
III-a	Small loss of coolant accident	5	Ref. 4	Fig. III-1	
III-b	Small steam line break	5		Fig. III-2	
III-c	Complete loss of flow	5		Fig. III-3	
III-d	Small feedwater line break	5		Fig. III-4	
III-e	SG tube rupture	5		Fig. III-5	
Level D					
IV-a	Large loss of coolant accident	1	Ref. 4	Fig. IV-1	
IV-b	Large steam line break	1		Fig. IV-2	
IV-c	RCP locked rotor	1		Fig. IV-3	
IV-d	Control rod ejection	1		Fig. IV-4	
IV-e	Large feedwater line break	1		Fig. IV-5	
Test					
V-a	Primary-side hydrostatic test	10	Ref. 4	–	

Table 8.1-4 Pressurizer spray line design transients (1/3)

Level A						
Mark	Transient		Occurrence	Reference		Remark
				Document	Fig. or Table	
I-a	Plant heat-up (100F/h)		120	Ref. 4	Fig. I-1	
I-b-1	Plant cooldown (200F/h, 2235～400psig)		120		Fig. I-2	
I-b-2	Plant cooldown (200F/h, lower than 400psig)		120		Fig. I-2	
I-c-1	Ramp load increase between 15% and 100% of full power (5% of full power per minute)		600		Fig. I-3	
I-c-2	Ramp load increase between 50% and 100% of full power (5% of full power per minute)		19, 200		Fig. I-4	
I-d-1	Ramp load decrease between 15% and 100% of full power (5% of full power per minute)		600		Fig. I-5	
I-d-2	Ramp load decrease between 50% and 100% of full power (5% of full power per minute)		19, 200		Fig. I-6	
I-e	Step load increase of 10% of full power		600		Fig. I-7	
I-f	Step load decrease of 10% of full power		600		Fig. I-8	
I-g	Large step load decrease with turbine bypass		60		Fig. I-9	
I-h	Steady-state fluctuation and load regulation	i) Steady-state fluctuation	1×10^6		—	P_p±50psi, T_{cold}±3.1F
		ii) Load regulation	8×10^5		Table 4	
I-i	Main feedwater cycling		2, 100		Fig. I-10	
I-j	Refueling		60		Fig. I-11	Water is replaced in 10 minutes.
I-k	Ramp load increase between 0% and 15% of full power		600		Fig. I-12	
I-l	Ramp load decrease between 0% and 15% of full power		600		Fig. I-13	
I-m	RCP startup		3, 000		Fig. I-14	
I-n	RCP shutdown		3, 000		Fig. I-15	
I-o	Core lifetime extension		60		Fig. I-16	
I-p	Primary leakage test		120		Fig. I-17	
I-q	Turbine roll test		10		Fig, I-18	
I-r	Boron concentration equalization		39, 600		—	P_p+25psi, Tp+1.4F,-0F

Table 8.1-4 Pressurizer spray line design transients (2/3)

Level B						
Mark	Transient		Occurrence	Reference		Remark
				Document	Fig. or Table	
II-a	Loss of load		60	Ref. 4	Fig. II-1	
II-b	Loss of offsite power		60		Fig. II-2	
II-c	Partial loss of reactor coolant flow		30		Fig. II-3	
II-d	Reactor trip from full power	i) With no inadvertent cooldown	60		Fig. II-4	
		ii) With cooldown and no safety injection	30		Fig. II-5	Including the transient of Excessive feedwater flow
		iii) With cooldown and safety injection	10		Fig. II-6	
II-e	Inadvertent RCS depressurization	i) Umbrella case	30		Fig. II-7	
		ii) Inadvertent auxiliary spray	15		Fig. II-12	
II-f	Control rod drop		30		Fig. II-8	
II-g	Inadvertent safeguards actuation		30		Fig. II-9	
II-h	Emergency feedwater cycling		700		Fig. II-10	
II-i	Cold over-pressure		30		Fig. II-11	
II-j	Excessive feedwater flow		—		—	Be covered with the transient of Reactor trip from full power ii)
II-k	Loss of offsite power with natural circulation cooldown		—		—	Be covered with the transient of Plant cooldown
II-l	Partial loss of emergency feedwater		30		—	Please use the figure of the transient of Loss of offsite power.
II-m	Safe shutdown		—		—	Be covered with the transient of Plant cooldown

Table 8.1-4 Pressurizer spray line design transients (3/3)

Mark	Transient	Occurrence	Reference		Remark
			Document	Fig. or Table	
Level C					
III-a	Small loss of coolant accident	5	Ref. 4	Fig. III-1	
III-b	Small steam line break	5		Fig. III-2	
III-c	Complete loss of flow	5		Fig. III-3	
III-d	Small feedwater line break	5		Fig. III-4	
III-e	SG tube rupture	5		Fig. III-5	
Level D					
IV-a	Large loss of coolant accident	1	Ref. 4	Fig. IV-1	
IV-b	Large steam line break	1		Fig. IV-2	
IV-c	RCP locked rotor	1		Fig. IV-3	
IV-d	Control rod ejection	1		Fig. IV-4	
IV-e	Large feedwater line break	1		Fig. IV-5	
Test					
V-a	Primary-side hydrostatic test	10	Ref. 4	–	

Table 8.1-5 Pressurizer safety depressurization valve line design transients (1/4)

Level A						
Mark	Transient		Occurrence	Reference		Remark
				Document	Fig. or Table	
I-a	Plant heat-up (100F/h)		120	Ref. 4	Fig. I-1	
I-b-1	Plant cooldown (200F/h, 2235～400psig)		120		Fig. I-2	
I-b-2	Plant cooldown (200F/h, lower than 400psig)		120		Fig. I-2	
I-c-1	Ramp load increase between 15% and 100% of full power (5% of full power per minute)		600		Fig. I-3	
I-c-2	Ramp load increase between 50% and 100% of full power (5% of full power per minute)		19, 200		Fig. I-4	
I-d-1	Ramp load decrease between 15% and 100% of full power (5% of full power per minute)		600		Fig. I-5	
I-d-2	Ramp load decrease between 50% and 100% of full power (5% of full power per minute)		19, 200		Fig. I-6	
I-e	Step load increase of 10% of full power		600		Fig. I-7	
I-f	Step load decrease of 10% of full power		600		Fig. I-8	
I-g	Large step load decrease with turbine bypass		60		Fig. I-9	
I-h	Steady-state fluctuation and load regulation	i) Steady-state fluctuation	1×10^6		—	P_p±50psi, T_p±3.1F
		ii) Load regulation	8×10^5		Table 4	
I-i	Main feedwater cycling		2, 100		Fig. I-10	
I-m	RCP startup		3, 000		Fig. I-14	
I-n	RCP shutdown		3, 000		Fig. I-15	
I-p	Primary leakage test		120		Fig. I-17	
I-q	Turbine roll test		10		Fig, I-18	
I-r	Boron concentration equalization		39, 600		—	P_p+25psi, Tp+1.4F,-0F

Table 8.1-5 Pressurizer safety depressurization valve line design transients (2/4)

Level B						
Mark	Transient		Occurrence	Reference		Remark
				Document	Fig. or Table	
II-a	Loss of load		60	Ref. 4	Fig. II-1	
II-b	Loss of offsite power		60		Fig. II-2	
II-c	Partial loss of reactor coolant flow		30		Fig. II-3	
II-d	Reactor trip from full power	i) With no inadvertent cooldown	60		Fig. II-4	
		ii) With cooldown and no safety injection	30		Fig. II-5	Including the transient of Excessive feedwater flow
		iii) With cooldown and safety injection	10		Fig. II-6	
II-e	Inadvertent RCS depressurization	i) Umbrella case	30		Fig. II-7	
		ii) Inadvertent auxiliary spray	15		Fig. II-12	
II-f	Control rod drop		30		Fig. II-8	
II-g	Inadvertent safeguards actuation		30		Fig. II-9	
II-h	Emergency feedwater cycling		700		Fig. II-10	
II-i	Cold over-pressure		30		Fig. II-11	
II-j	Excessive feedwater flow		—		—	Be covered with the transient of Reactor trip from full power ii)
II-k	Loss of offsite power with natural circulation cooldown		—		—	Be covered with the transient of Plant cooldown
II-l	Partial loss of emergency feedwater		30		—	Please use the figure of the transient of Loss of offsite power.
II-m	Safe shutdown		—		—	Be covered with the transient of Plant cooldown

Table 8.1-5 Pressurizer safety depressurization valve line design transients (3/4)

Mark	Transient	Occurrence	Reference		Remark
			Document	Fig. or Table	
Level C					
III-a	Small loss of coolant accident	5	Ref. 4	Fig. III-1	
III-b	Small steam line break	5		Fig. III-2	
III-c	Complete loss of flow	5		Fig. III-3	
III-d	Small feedwater line break	5		Fig. III-4	
III-e	SG tube rupture	5		Fig. III-5	
Level D					
IV-a	Large loss of coolant accident	1	Ref. 4	Fig. IV-1	
IV-b	Large steam line break	1		Fig. IV-2	
IV-c	RCP locked rotor	1		Fig. IV-3	
IV-d	Control rod ejection	1		Fig. IV-4	
IV-e	Large feedwater line break	1		Fig. IV-5	
Test					
V-a	Primary-side hydrostatic test	10	Ref. 4	—	

Table 8.1-5 Pressurizer safety depressurization valve line design transients (4/4) (branch piping transients)

Mark	Transient	Occurrence	Reference		Remark
			Document	Fig. or Table	
Level A, B					
—	Pressurizer safety depressurization valve actuation	60	Ref. 4	—	

Table 8.1-6 Pressurizer safety valve line design transients (1/4)

Level A						
Mark	Transient		Occurrence	Reference		Remark
				Document	Fig. or Table	
I-a	Plant heat-up (100F/h)		120	Ref. 4	Fig. I-1	
I-b-1	Plant cooldown (200F/h, 2235～400psig)		120		Fig. I-2	
I-b-2	Plant cooldown (200F/h, lower than 400psig)		120		Fig. I-2	
I-c-1	Ramp load increase between 15% and 100% of full power (5% of full power per minute)		600		Fig. I-3	
I-c-2	Ramp load increase between 50% and 100% of full power (5% of full power per minute)		19, 200		Fig. I-4	
I-d-1	Ramp load decrease between 15% and 100% of full power (5% of full power per minute)		600		Fig. I-5	
I-d-2	Ramp load decrease between 50% and 100% of full power (5% of full power per minute)		19, 200		Fig. I-6	
I-e	Step load increase of 10% of full power		600		Fig. I-7	
I-f	Step load decrease of 10% of full power		600		Fig. I-8	
I-g	Large step load decrease with turbine bypass		60		Fig. I-9	
I-h	Steady-state fluctuation and load regulation	i) Steady-state fluctuation	1×10^6		—	P_p±50psi, Tp±3.1F
		ii) Load regulation	8×10^5		Table 4	
I-i	Main feedwater cycling		2, 100		Fig. I-10	
I-m	RCP startup		3, 000		Fig. I-14	
I-n	RCP shutdown		3, 000		Fig. I-15	
I-p	Primary leakage test		120		Fig. I-17	
I-q	Turbine roll test		10		Fig, I-18	
I-r	Boron concentration equalization		39, 600		—	P_p+25psi, Tp+1.4F,-0F

Table 8.1-6 Pressurizer safety valve line design transients (2/4)

Level B						
Mark	Transient		Occurrence	Reference		Remark
				Document	Fig. or Table	
II-a	Loss of load		60	Ref. 4	Fig. II-1	
II-b	Loss of offsite power		60		Fig. II-2	
II-c	Partial loss of reactor coolant flow		30		Fig. II-3	
II-d	Reactor trip from full power	i) With no inadvertent cooldown	60		Fig. II-4	
		ii) With cooldown and no safety injection	30		Fig. II-5	Including the transient of Excessive feedwater flow
		iii) With cooldown and safety injection	10		Fig. II-6	
II-e	Inadvertent RCS depressurization	i) Umbrella case	30		Fig. II-7	
		ii) Inadvertent auxiliary spray	15		Fig. II-12	
II-f	Control rod drop		30		Fig. II-8	
II-g	Inadvertent safeguards actuation		30		Fig. II-9	
II-h	Emergency feedwater cycling		700		Fig. II-10	
II-i	Cold over-pressure		30		Fig. II-11	
II-j	Excessive feedwater flow		—		—	Be covered with the transient of Reactor trip from full power ii)
II-k	Loss of offsite power with natural circulation cooldown		—		—	Be covered with the transient of Plant cooldown
II-l	Partial loss of emergency feedwater		30		—	Please use the figure of the transient of Loss of offsite power.
II-m	Safe shutdown		—		—	Be covered with the transient of Plant cooldown

Table 8.1-6 Pressurizer safety valve line design transients (3/4)

Mark	Transient	Occurrence	Reference		Remark
			Document	Fig. or Table	
Level C					
III-a	Small loss of coolant accident	5	Ref. 4	Fig. III-1	
III-b	Small steam line break	5		Fig. III-2	
III-c	Complete loss of flow	5		Fig. III-3	
III-d	Small feedwater line break	5		Fig. III-4	
III-e	SG tube rupture	5		Fig. III-5	
Level D					
IV-a	Large loss of coolant accident	1	Ref. 4	Fig. IV-1	
IV-b	Large steam line break	1		Fig. IV-2	
IV-c	RCP locked rotor	1		Fig. IV-3	
IV-d	Control rod ejection	1		Fig. IV-4	
IV-e	Large feedwater line break	1		Fig. IV-5	
Test					
V-a	Primary-side hydrostatic test	10	Ref. 4	—	

Table 8.1-6 Pressurizer safety valve line design transients (4/4) (branch piping transients)

Mark	Transient	Occurrence	Reference		Remark
			Document	Fig. or Table	
Level A, B					
—	Pressurizer safety valve actuation	60	Ref. 4	—	

Table 8.1-7 RHRS suction loop A line design transients (1/4)

Level A						
Mark	Transient		Occurrence	Reference		Remark
				Document	Fig. or Table	
I-a	Plant heat-up (50F/h)		120	Ref. 4	Fig. I-1	
I-b	Plant cooldown (100F/h)		120		Fig. I-2	Including the transient of Loss of offsite power with natural circulation cooldown (10 times) and Safe shutdown (1 time) .
I-c-1	Ramp load increase between 15% and 100% of full power (5% of full power per minute)		600		Fig. I-3	
I-c-2	Ramp load increase between 50% and 100% of full power (5% of full power per minute)		19, 200		Fig. I-4	
I-d-1	Ramp load decrease between 15% and 100% of full power (5% of full power per minute)		600		Fig. I-5	
I-d-2	Ramp load decrease between 50% and 100% of full power (5% of full power per minute)		19, 200		Fig. I-6	
I-e	Step load increase of 10% of full power		600		Fig. I-7	
I-f	Step load decrease of 10% of full power		600		Fig. I-8	
I-g	Large step load decrease with turbine bypass		60		Fig. I-9	
I-h	Steady-state fluctuation and load regulation	i) Steady-state fluctuation	1×10^6		–	P_p±50psi, T_{hot}, T_{cold}, T_{ave}±3.1F
		ii) Load regulation	8×10^5		Table 4	
I-i	Main feedwater cycling		2, 100		Fig. I-10	
I-j	Refueling		60		Fig. I-11	Water is replaced in 10 minutes.
I-k	Ramp load increase between 0% and 15% of full power		600		Fig. I-12	
I-l	Ramp load decrease between 0% and 15% of full power		600		Fig. I-13	
I-m	RCP startup		3, 000		Fig. I-14	
I-n	RCP shutdown		3, 000		Fig. I-15	
I-o	Core lifetime extension		60		Fig. I-16	
I-p	Primary leakage test		120		Fig. I-17	
I-q	Turbine roll test		10		Fig, I-18	

Table 8.1-7 RHRS suction loop A line design transients (2/4)

Level B						
Mark	Transient		Occurrence	Reference		Remark
				Document	Fig. or Table	
II-a	Loss of load		60	Ref. 4	Fig. II-1	
II-b	Loss of offsite power		60		Fig. II-2	
II-c	Partial loss of reactor coolant flow		30		Fig. II-3	
II-d	Reactor trip from full power	i) With no inadvertent cooldown	60		Fig. II-4	
		ii) With cooldown and no safety injection	30		Fig. II-5	Including the transient of Excessive feedwater flow
		iii) With cooldown and safety injection	10		Fig. II-6	
II-e	Inadvertent RCS depressurization		30		Fig. II-7	
II-f	Control rod drop		30		Fig. II-8	
II-g	Inadvertent safeguards actuation		30		Fig. II-9	
II-h	Emergency feedwater cycling		700		Fig. II-10	
II-i	Cold over-pressure		30		Fig. II-11	
II-j	Excessive feedwater flow		—		—	Be covered with the transient of Reactor trip from full power ii)
II-k	Loss of offsite power with natural circulation cooldown		—		—	Be covered with the transient of Plant cooldown
II-l	Partial loss of emergency feedwater		30		—	Please use the figure of the transient of Loss of offsite power.
II-m	Safe shutdown		—		—	Be covered with the transient of Plant cooldown

Table 8.1-7 RHRS suction loop A line design transients (3/4)

Mark	Transient	Occurrence	Reference		Remark
			Document	Fig. or Table	
Level C					
III-a	Small loss of coolant accident	5	Ref. 4	Fig. III-1	
III-b	Small steam line break	5		Fig. III-2	
III-c	Complete loss of flow	5		Fig. III-3	
III-d	Small feedwater line break	5		Fig. III-4	
III-e	SG tube rupture	5		Fig. III-5	
Level D					
IV-a	Large loss of coolant accident	1	Ref. 4	Fig. IV-1	
IV-b	Large steam line break	1		Fig. IV-2	
IV-c	RCP locked rotor	1		Fig. IV-3	
IV-d	Control rod ejection	1		Fig. IV-4	
IV-e	Large feedwater line break	1		Fig. IV-5	
Test					
V-a	Primary-side hydrostatic test	10	Ref. 4	–	

Table 8.1-7 RHRS suction loop A line design transients (4/4) (branch piping transients)

Mark	Transient	Occurrence	Reference		Remark
			Document	Fig. or Table	
Level A, B					
a)	Plant heat-up	120	Ref. 4	Fig. I-26	
b)	Plant cooldown	120		Fig. I-27	
c)	Safe shutdown	1		Fig. II-21	

Table 8.1-8 RHRS suction loop B line design transients (1/4)

Level A						
Mark	Transient		Occurrence	Reference		Remark
				Document	Fig. or Table	
I-a	Plant heat-up (50F/h)		120	Ref. 4	Fig. I-1	
I-b	Plant cooldown (100F/h)		120		Fig. I-2	Including the transient of Loss of offsite power with natural circulation cooldown (10 times) and Safe shutdown (1 time) .
I-c-1	Ramp load increase between 15% and 100% of full power (5% of full power per minute)		600		Fig. I-3	
I-c-2	Ramp load increase between 50% and 100% of full power (5% of full power per minute)		19, 200		Fig. I-4	
I-d-1	Ramp load decrease between 15% and 100% of full power (5% of full power per minute)		600		Fig. I-5	
I-d-2	Ramp load decrease between 50% and 100% of full power (5% of full power per minute)		19, 200		Fig. I-6	
I-e	Step load increase of 10% of full power		600		Fig. I-7	
I-f	Step load decrease of 10% of full power		600		Fig. I-8	
I-g	Large step load decrease with turbine bypass		60		Fig. I-9	
I-h	Steady-state fluctuation and load regulation	i) Steady-state fluctuation	1×10^6		—	P_p±50psi, T_{hot}, T_{cold}, T_{ave}±3.1F
		ii) Load regulation	8×10^5		Table 4	
I-i	Main feedwater cycling		2, 100		Fig. I-10	
I-j	Refueling		60		Fig. I-11	Water is replaced in 10 minutes.
I-k	Ramp load increase between 0% and 15% of full power		600		Fig. I-12	
I-l	Ramp load decrease between 0% and 15% of full power		600		Fig. I-13	
I-m	RCP startup		3, 000		Fig. I-14	
I-n	RCP shutdown		3, 000		Fig. I-15	
I-o	Core lifetime extension		60		Fig. I-16	
I-p	Primary leakage test		120		Fig. I-17	
I-q	Turbine roll test		10		Fig, I-18	

Table 8.1-8 RHRS suction loop B line design transients (2/4)

Level B						
Mark	Transient		Occurrence	Reference		Remark
				Document	Fig. or Table	
II-a	Loss of load		60	Ref. 4	Fig. II-1	
II-b	Loss of offsite power		60		Fig. II-2	
II-c	Partial loss of reactor coolant flow		30		Fig. II-3	
II-d	Reactor trip from full power	i) With no inadvertent cooldown	60		Fig. II-4	
		ii) With cooldown and no safety injection	30		Fig. II-5	Including the transient of Excessive feedwater flow
		iii) With cooldown and safety injection	10		Fig. II-6	
II-e	Inadvertent RCS depressurization		30		Fig. II-7	
II-f	Control rod drop		30		Fig. II-8	
II-g	Inadvertent safeguards actuation		30		Fig. II-9	
II-h	Emergency feedwater cycling		700		Fig. II-10	
II-i	Cold over-pressure		30		Fig. II-11	
II-j	Excessive feedwater flow		—		—	Be covered with the transient of Reactor trip from full power ii)
II-k	Loss of offsite power with natural circulation cooldown		—		—	Be covered with the transient of Plant cooldown
II-l	Partial loss of emergency feedwater		30		—	Please use the figure of the transient of Loss of offsite power.
II-m	Safe shutdown		—		—	Be covered with the transient of Plant cooldown

Table 8.1-8 RHRS suction loop B line design transients (3/4)

Mark	Transient	Occurrence	Reference		Remark
			Document	Fig. or Table	
Level C					
III-a	Small loss of coolant accident	5	Ref. 4	Fig. III-1	
III-b	Small steam line break	5		Fig. III-2	
III-c	Complete loss of flow	5		Fig. III-3	
III-d	Small feedwater line break	5		Fig. III-4	
III-e	SG tube rupture	5		Fig. III-5	
Level D					
IV-a	Large loss of coolant accident	1	Ref. 4	Fig. IV-1	
IV-b	Large steam line break	1		Fig. IV-2	
IV-c	RCP locked rotor	1		Fig. IV-3	
IV-d	Control rod ejection	1		Fig. IV-4	
IV-e	Large feedwater line break	1		Fig. IV-5	
Test					
V-a	Primary-side hydrostatic test	10	Ref. 4	–	

Table 8.1-8 RHRS suction loop B line design transients (4/4) (branch piping transients)

Mark	Transient	Occurrence	Reference		Remark
			Document	Fig. or Table	
Level A, B					
a)	Plant heat-up	120	Ref. 4	Fig. I-26	
b)	Plant cooldown	120		Fig. I-27	

Table 8.1-9 RHR return line design transients (1/4)

Level A						
Mark	Transient		Occurrence	Reference		Remark
				Document	Fig. or Table	
I-a	Plant heat-up (50F/h)		120	Ref. 4	Fig. I-1	
I-b	Plant cooldown (100F/h)		120		Fig. I-2	Including the transient of Loss of offsite power with natural circulation cooldown (10 times) and Safe shutdown (1 time) .
I-c-1	Ramp load increase between 15% and 100% of full power (5% of full power per minute)		600		Fig. I-3	
I-c-2	Ramp load increase between 50% and 100% of full power (5% of full power per minute)		19, 200		Fig. I-4	
I-d-1	Ramp load decrease between 15% and 100% of full power (5% of full power per minute)		600		Fig. I-5	
I-d-2	Ramp load decrease between 50% and 100% of full power (5% of full power per minute)		19, 200		Fig. I-6	
I-e	Step load increase of 10% of full power		600		Fig. I-7	
I-f	Step load decrease of 10% of full power		600		Fig. I-8	
I-g	Large step load decrease with turbine bypass		60		Fig. I-9	
I-h	Steady-state fluctuation and load regulation	i) Steady-state fluctuation	1×10^6		–	P_p±50psi, T_{hot}, T_{cold}, T_{ave}±3.1F
		ii) Load regulation	8×10^5		Table 4	
I-i	Main feedwater cycling		2, 100		Fig. I-10	
I-j	Refueling		60		Fig. I-11	Water is replaced in 10 minutes.
I-k	Ramp load increase between 0% and 15% of full power		600		Fig. I-12	
I-l	Ramp load decrease between 0% and 15% of full power		600		Fig. I-13	
I-m	RCP startup		3, 000		Fig. I-14	
I-n	RCP shutdown		3, 000		Fig. I-15	
I-o	Core lifetime extension		60		Fig. I-16	
I-p	Primary leakage test		120		Fig. I-17	
I-q	Turbine roll test		10		Fig, I-18	

Table 8.1-9 RHR return line design transients (2/4)

Level B						
Mark	Transient		Occurrence	Reference		Remark
				Document	Fig. or Table	
II-a	Loss of load		60	Ref. 4	Fig. II-1	
II-b	Loss of offsite power		60		Fig. II-2	
II-c	Partial loss of reactor coolant flow		30		Fig. II-3	
II-d	Reactor trip from full power	i) With no inadvertent cooldown	60		Fig. II-4	
		ii) With cooldown and no safety injection	30		Fig. II-5	Including the transient of Excessive feedwater flow
		iii) With cooldown and safety injection	10		Fig. II-6	
II-e	Inadvertent RCS depressurization		30		Fig. II-7	
II-f	Control rod drop		30		Fig. II-8	
II-g	Inadvertent safeguards actuation		30		Fig. II-9	
II-h	Emergency feedwater cycling		700		Fig. II-10	
II-i	Cold over-pressure		30		Fig. II-11	
II-j	Excessive feedwater flow		—		—	Be covered with the transient of Reactor trip from full power ii)
II-k	Loss of offsite power with natural circulation cooldown		—		—	Be covered with the transient of Plant cooldown
II-l	Partial loss of emergency feedwater		30		—	Please use the figure of the transient of Loss of offsite power.
II-m	Safe shutdown		—		—	Be covered with the transient of Plant cooldown

Table 8.1-9 RHR return line design transients (3/4)

Mark	Transient	Occurrence	Reference		Remark
			Document	Fig. or Table	
Level C					
III-a	Small loss of coolant accident	5	Ref. 4	Fig. III-1	
III-b	Small steam line break	5		Fig. III-2	
III-c	Complete loss of flow	5		Fig. III-3	
III-d	Small feedwater line break	5		Fig. III-4	
III-e	SG tube rupture	5		Fig. III-5	
Level D					
IV-a	Large loss of coolant accident	1	Ref. 4	Fig. IV-1	
IV-b	Large steam line break	1		Fig. IV-2	
IV-c	RCP locked rotor	1		Fig. IV-3	
IV-d	Control rod ejection	1		Fig. IV-4	
IV-e	Large feedwater line break	1		Fig. IV-5	
Test					
V-a	Primary-side hydrostatic test	10	Ref. 4	—	

Table 8.1-9 RHR return line design transients (4/4) (branch piping transients)

Mark	Transient	Occurrence	Reference		Remark
			Document	Fig. or Table	
Level A, B					
a)	Plant cooldown	120	Ref. 4	Fig. I-24	
b)	Refueling	60		Fig. I-25	
c)	Plant heat-up	120		Fig. I-26	

Table 8.1-10 Accumulator line design transients (1/4)

Level A						
Mark	Transient		Occurrence	Reference		Remark
				Document	Fig. or Table	
I-a	Plant heat-up (50F/h)		120	Ref. 4	Fig. I-1	
I-b	Plant cooldown (100F/h)		120		Fig. I-2	Including the transient of Loss of offsite power with natural circulation cooldown (10 times) and Safe shutdown (1 time) .
I-c-1	Ramp load increase between 15% and 100% of full power (5% of full power per minute)		600		Fig. I-3	
I-c-2	Ramp load increase between 50% and 100% of full power (5% of full power per minute)		19, 200		Fig. I-4	
I-d-1	Ramp load decrease between 15% and 100% of full power (5% of full power per minute)		600		Fig. I-5	
I-d-2	Ramp load decrease between 50% and 100% of full power (5% of full power per minute)		19, 200		Fig. I-6	
I-e	Step load increase of 10% of full power		600		Fig. I-7	
I-f	Step load decrease of 10% of full power		600		Fig. I-8	
I-g	Large step load decrease with turbine bypass		60		Fig. I-9	
I-h	Steady-state fluctuation and load regulation	i) Steady-state fluctuation	1×10^6		–	P_p±50psi, T_{hot}, T_{cold}, T_{ave}±3.1F
		ii) Load regulation	8×10^5		Table 4	
I-i	Main feedwater cycling		2, 100		Fig. I-10	
I-j	Refueling		60		Fig. I-11	Water is replaced in 10 minutes.
I-k	Ramp load increase between 0% and 15% of full power		600		Fig. I-12	
I-l	Ramp load decrease between 0% and 15% of full power		600		Fig. I-13	
I-m	RCP startup		3, 000		Fig. I-14	
I-n	RCP shutdown		3, 000		Fig. I-15	
I-o	Core lifetime extension		60		Fig. I-16	
I-p	Primary leakage test		120		Fig. I-17	
I-q	Turbine roll test		10		Fig, I-18	

Table 8.1-10 Accumulator line design transients (2/4)

Level B						
Mark	Transient		Occurrence	Reference		Remark
				Document	Fig. or Table	
II-a	Loss of load		60	Ref. 4	Fig. II-1	
II-b	Loss of offsite power		60		Fig. II-2	
II-c	Partial loss of reactor coolant flow		30		Fig. II-3	
II-d	Reactor trip from full power	i) With no inadvertent cooldown	60		Fig. II-4	
		ii) With cooldown and no safety injection	30		Fig. II-5	Including the transient of Excessive feedwater flow
		iii) With cooldown and safety injection	10		Fig. II-6	
II-e	Inadvertent RCS depressurization		30		Fig. II-7	
II-f	Control rod drop		30		Fig. II-8	
II-g	Inadvertent safeguards actuation		30		Fig. II-9	
II-h	Emergency feedwater cycling		700		Fig. II-10	
II-i	Cold over-pressure		30		Fig. II-11	
II-j	Excessive feedwater flow		—		—	Be covered with the transient of Reactor trip from full power ii)
II-k	Loss of offsite power with natural circulation cooldown		—		—	Be covered with the transient of Plant cooldown
II-l	Partial loss of emergency feedwater		30		—	Please use the figure of the transient of Loss of offsite power.
II-m	Safe shutdown		—		—	Be covered with the transient of Plant cooldown

Table 8.1-10 Accumulator line design transients (3/4)

Mark	Transient	Occurrence	Reference		Remark
			Document	Fig. or Table	
Level C					
III-a	Small loss of coolant accident	5	Ref. 4	Fig. III-1	
III-b	Small steam line break	5		Fig. III-2	
III-c	Complete loss of flow	5		Fig. III-3	
III-d	Small feedwater line break	5		Fig. III-4	
III-e	SG tube rupture	5		Fig. III-5	
Level D					
IV-a	Large loss of coolant accident	1	Ref. 4	Fig. IV-1	
IV-b	Large steam line break	1		Fig. IV-2	
IV-c	RCP locked rotor	1		Fig. IV-3	
IV-d	Control rod ejection	1		Fig. IV-4	
IV-e	Large feedwater line break	1		Fig. IV-5	
Test					
V-a	Primary-side hydrostatic test	10	Ref. 4	—	

Table 8.1-10 Accumulator line design transients (4/4) (branch piping transients)

Mark	Transient	Occurrence	Reference		Remark
			Document	Fig. or Table	
Level A, B					
a)	Inadvertent actuation of the accumulator tank	5	Ref. 4	Fig. II-15	
b)	Inadvertent RCS depressurization	30		Fig. II-16	

Table 8.1-11 DVI line design transients (1/4)

Level A						
Mark	Transient		Occurrence	Reference		Remark
				Document	Fig. or Table	
I-a	Plant heat-up (50F/h)		120	Ref. 4	Fig. I-1	
I-b	Plant cooldown (100F/h)		120		Fig. I-2	Including the transient of Loss of offsite power with natural circulation cooldown (10 times) and Safe shutdown (1 time) .
I-c-1	Ramp load increase between 15% and 100% of full power (5% of full power per minute)		600		Fig. I-3	
I-c-2	Ramp load increase between 50% and 100% of full power (5% of full power per minute)		19, 200		Fig. I-4	
I-d-1	Ramp load decrease between 15% and 100% of full power (5% of full power per minute)		600		Fig. I-5	
I-d-2	Ramp load decrease between 50% and 100% of full power (5% of full power per minute)		19, 200		Fig. I-6	
I-e	Step load increase of 10% of full power		600		Fig. I-7	
I-f	Step load decrease of 10% of full power		600		Fig. I-8	
I-g	Large step load decrease with turbine bypass		60		Fig. I-9	
I-h	Steady-state fluctuation and load regulation	i) Steady-state fluctuation	1×10^6		–	P_p±50psi, T_{hot}, T_{cold}, T_{ave}±3.1F
		ii) Load regulation	8×10^5		Table 4	
I-i	Main feedwater cycling		2, 100		Fig. I-10	
I-j	Refueling		60		Fig. I-11	Water is replaced in 10 minutes.
I-k	Ramp load increase between 0% and 15% of full power		600		Fig. I-12	
I-l	Ramp load decrease between 0% and 15% of full power		600		Fig. I-13	
I-m	RCP startup		3, 000		Fig. I-14	
I-n	RCP shutdown		3, 000		Fig. I-15	
I-o	Core lifetime extension		60		Fig. I-16	
I-p	Primary leakage test		120		Fig. I-17	
I-q	Turbine roll test		10		Fig, I-18	

Table 8.1-11 DVI line design transients (2/4)

Level B						
Mark	Transient		Occurrence	Reference		Remark
				Document	Fig. or Table	
II-a	Loss of load		60	Ref. 4	Fig. II-1	
II-b	Loss of offsite power		60		Fig. II-2	
II-c	Partial loss of reactor coolant flow		30		Fig. II-3	
II-d	Reactor trip from full power	i) With no inadvertent cooldown	60		Fig. II-4	
		ii) With cooldown and no safety injection	30		Fig. II-5	Including the transient of Excessive feedwater flow
		iii) With cooldown and safety injection	10		Fig. II-6	
II-e	Inadvertent RCS depressurization		30		Fig. II-7	
II-f	Control rod drop		30		Fig. II-8	
II-g	Inadvertent safeguards actuation		30		Fig. II-9	
II-h	Emergency feedwater cycling		700		Fig. II-10	
II-i	Cold over-pressure		30		Fig. II-11	
II-j	Excessive feedwater flow		—		—	Be covered with the transient of Reactor trip from full power ii)
II-k	Loss of offsite power with natural circulation cooldown		—		—	Be covered with the transient of Plant cooldown
II-l	Partial loss of emergency feedwater		30		—	Please use the figure of the transient of Loss of offsite power.
II-m	Safe shutdown		—		—	Be covered with the transient of Plant cooldown

Table 8.1-11 DVI line design transients (3/4)

Mark	Transient	Occurrence	Reference		Remark
			Document	Fig. or Table	
Level C					
III-a	Small loss of coolant accident	5	Ref. 4	Fig. III-1	
III-b	Small steam line break	5		Fig. III-2	
III-c	Complete loss of flow	5		Fig. III-3	
III-d	Small feedwater line break	5		Fig. III-4	
III-e	SG tube rupture	5		Fig. III-5	
Level D					
IV-a	Large loss of coolant accident	1	Ref. 4	Fig. IV-1	
IV-b	Large steam line break	1		Fig. IV-2	
IV-c	RCP locked rotor	1		Fig. IV-3	
IV-d	Control rod ejection	1		Fig. IV-4	
IV-e	Large feedwater line break	1		Fig. IV-5	
Test					
V-a	Primary-side hydrostatic test	10	Ref. 4	—	

Table 8.1-11 DVI line design transients (4/4) (branch piping transients)

Mark	Transient	Occurrence	Reference		Remark
			Document	Fig. or Table	
Level A, B					
a)	Reactor trip from full power with cooldown and safety injection	10	Ref. 4	Fig. II-17	
b)	Inadvertent RCS depressurization	30		Fig. II-18	
c)	Inadvertent safeguards actuation	30		Fig. II-19	
d)	Safe shutdown	1		Fig. II-20	

Table 8.1-12 CVCS charging line design transients (1/4)

Level A						
Mark	Transient		Occurrence	Reference		Remark
				Document	Fig. or Table	
I-a	Plant heat-up (50F/h)		120	Ref. 4	Fig. I-1	
I-b	Plant cooldown (100F/h)		120		Fig. I-2	Including the transient of Loss of offsite power with natural circulation cooldown (10 times) and Safe shutdown (1 time) .
I-c-1	Ramp load increase between 15% and 100% of full power (5% of full power per minute)		600		Fig. I-3	
I-c-2	Ramp load increase between 50% and 100% of full power (5% of full power per minute)		19, 200		Fig. I-4	
I-d-1	Ramp load decrease between 15% and 100% of full power (5% of full power per minute)		600		Fig. I-5	
I-d-2	Ramp load decrease between 50% and 100% of full power (5% of full power per minute)		19, 200		Fig. I-6	
I-e	Step load increase of 10% of full power		600		Fig. I-7	
I-f	Step load decrease of 10% of full power		600		Fig. I-8	
I-g	Large step load decrease with turbine bypass		60		Fig. I-9	
I-h	Steady-state fluctuation and load regulation	i) Steady-state fluctuation	1×10^6		–	P_p±50psi, T_{hot}, T_{cold}, T_{ave}±3.1F
		ii) Load regulation	8×10^5		Table 4	
I-i	Main feedwater cycling		2, 100		Fig. I-10	
I-j	Refueling		60		Fig. I-11	Water is replaced in 10 minutes.
I-k	Ramp load increase between 0% and 15% of full power		600		Fig. I-12	
I-l	Ramp load decrease between 0% and 15% of full power		600		Fig. I-13	
I-m	RCP startup		3, 000		Fig. I-14	
I-n	RCP shutdown		3, 000		Fig. I-15	
I-o	Core lifetime extension		60		Fig. I-16	
I-p	Primary leakage test		120		Fig. I-17	
I-q	Turbine roll test		10		Fig, I-18	

Table 8.1-12 CVCS charging line design transients (2/4)

Level B						
Mark	Transient		Occurrence	Reference		Remark
				Document	Fig. or Table	
II-a	Loss of load		60	Ref. 4	Fig. II-1	
II-b	Loss of offsite power		60		Fig. II-2	
II-c	Partial loss of reactor coolant flow		30		Fig. II-3	
II-d	Reactor trip from full power	i) With no inadvertent cooldown	60		Fig. II-4	
		ii) With cooldown and no safety injection	30		Fig. II-5	Including the transient of Excessive feedwater flow
		iii) With cooldown and safety injection	10		Fig. II-6	
II-e	Inadvertent RCS depressurization		30		Fig. II-7	
II-f	Control rod drop		30		Fig. II-8	
II-g	Inadvertent safeguards actuation		30		Fig. II-9	
II-h	Emergency feedwater cycling		700		Fig. II-10	
II-i	Cold over-pressure		30		Fig. II-11	
II-j	Excessive feedwater flow		—		—	Be covered with the transient of Reactor trip from full power ii)
II-k	Loss of offsite power with natural circulation cooldown		—		—	Be covered with the transient of Plant cooldown
II-l	Partial loss of emergency feedwater		30		—	Please use the figure of the transient of Loss of offsite power.
II-m	Safe shutdown		—		—	Be covered with the transient of Plant cooldown

Table 8.1-12 CVCS charging line design transients (3/4)

Mark	Transient	Occurrence	Reference		Remark
			Document	Fig. or Table	
Level C					
III-a	Small loss of coolant accident	5	Ref. 4	Fig. III-1	
III-b	Small steam line break	5		Fig. III-2	
III-c	Complete loss of flow	5		Fig. III-3	
III-d	Small feedwater line break	5		Fig. III-4	
III-e	SG tube rupture	5		Fig. III-5	
Level D					
IV-a	Large loss of coolant accident	1	Ref. 4	Fig. IV-1	
IV-b	Large steam line break	1		Fig. IV-2	
IV-c	RCP locked rotor	1		Fig. IV-3	
IV-d	Control rod ejection	1		Fig. IV-4	
IV-e	Large feedwater line break	1		Fig. IV-5	
Test					
V-a	Primary-side hydrostatic test	10	Ref. 4	—	

Table 8.1-12 CVCS charging line design transients (4/4) (branch piping transients)

Level A, B						
Mark	Transient		Occurrence	Reference		Remark
				Document	Fig. or Table	
1.A	Letdown shut off and re-initiated		70	Ref. 4	Fig. II-13	
1.B	Charging line shut off and re-initiated	a) Maintenance	30		Fig. I-19	
		b) SI	70		Fig. II-14	
2.A	Charging flow 50% step decrease and return		20, 400		Fig. I-20	
2.B	Charging flow 50% step increase and return		23, 600		Fig. I-21	
2.C	Letdown flow 50% step decrease and return		2, 900		Fig. I-22	
2.D	Letdown flow 100% step increase and return		19, 800		Fig. I-23	

Table 8.1-13 CVCS let down line design transients (1/4)

Level A						
Mark	Transient		Occurrence	Reference		Remark
				Document	Fig. or Table	
I-a	Plant heat-up (50F/h)		120	Ref. 4	Fig. I-1	
I-b	Plant cooldown (100F/h)		120		Fig. I-2	Including the transient of Loss of offsite power with natural circulation cooldown (10 times) and Safe shutdown (1 time) .
I-c-1	Ramp load increase between 15% and 100% of full power (5% of full power per minute)		600		Fig. I-3	
I-c-2	Ramp load increase between 50% and 100% of full power (5% of full power per minute)		19, 200		Fig. I-4	
I-d-1	Ramp load decrease between 15% and 100% of full power (5% of full power per minute)		600		Fig. I-5	
I-d-2	Ramp load decrease between 50% and 100% of full power (5% of full power per minute)		19, 200		Fig. I-6	
I-e	Step load increase of 10% of full power		600		Fig. I-7	
I-f	Step load decrease of 10% of full power		600		Fig. I-8	
I-g	Large step load decrease with turbine bypass		60		Fig. I-9	
I-h	Steady-state fluctuation and load regulation	i) Steady-state fluctuation	1×10^6		–	P_p±50psi, T_{hot}, T_{cold}, T_{ave}±3.1F
		ii) Load regulation	8×10^5		Table 4	
I-i	Main feedwater cycling		2, 100		Fig. I-10	
I-j	Refueling		60		Fig. I-11	Water is replaced in 10 minutes.
I-k	Ramp load increase between 0% and 15% of full power		600		Fig. I-12	
I-l	Ramp load decrease between 0% and 15% of full power		600		Fig. I-13	
I-m	RCP startup		3, 000		Fig. I-14	
I-n	RCP shutdown		3, 000		Fig. I-15	
I-o	Core lifetime extension		60		Fig. I-16	
I-p	Primary leakage test		120		Fig. I-17	
I-q	Turbine roll test		10		Fig, I-18	

Table 8.1-13 CVCS let down line design transients (2/4)

Level B						
Mark	Transient		Occurrence	Reference		Remark
				Document	Fig. or Table	
II-a	Loss of load		60	Ref. 4	Fig. II-1	
II-b	Loss of offsite power		60		Fig. II-2	
II-c	Partial loss of reactor coolant flow		30		Fig. II-3	
II-d	Reactor trip from full power	i) With no inadvertent cooldown	60		Fig. II-4	
		ii) With cooldown and no safety injection	30		Fig. II-5	Including the transient of Excessive feedwater flow
		iii) With cooldown and safety injection	10		Fig. II-6	
II-e	Inadvertent RCS depressurization		30		Fig. II-7	
II-f	Control rod drop		30		Fig. II-8	
II-g	Inadvertent safeguards actuation		30		Fig. II-9	
II-h	Emergency feedwater cycling		700		Fig. II-10	
II-i	Cold over-pressure		30		Fig. II-11	
II-j	Excessive feedwater flow		—		—	Be covered with the transient of Reactor trip from full power ii)
II-k	Loss of offsite power with natural circulation cooldown		—		—	Be covered with the transient of Plant cooldown
II-l	Partial loss of emergency feedwater		30		—	Please use the figure of the transient of Loss of offsite power.
II-m	Safe shutdown		—		—	Be covered with the transient of Plant cooldown

Table 8.1-13 CVCS let down line design transients (3/4)

Mark	Transient	Occurrence	Reference		Remark
			Document	Fig. or Table	
Level C					
III-a	Small loss of coolant accident	5	Ref. 4	Fig. III-1	
III-b	Small steam line break	5		Fig. III-2	
III-c	Complete loss of flow	5		Fig. III-3	
III-d	Small feedwater line break	5		Fig. III-4	
III-e	SG tube rupture	5		Fig. III-5	
Level D					
IV-a	Large loss of coolant accident	1	Ref. 4	Fig. IV-1	
IV-b	Large steam line break	1		Fig. IV-2	
IV-c	RCP locked rotor	1		Fig. IV-3	
IV-d	Control rod ejection	1		Fig. IV-4	
IV-e	Large feedwater line break	1		Fig. IV-5	
Test					
V-a	Primary-side hydrostatic test	10	Ref. 4	–	

Table 8.1-13 CVCS let down line design transients (4/4) (branch piping transients)

Mark	Transient	Occurrence	Reference		Remark
			Document	Fig. or Table	
Level A, B					
a)	Plant heat-up	120	Ref. 4	Fig. I-26	
b)	Plant cooldown	120		Fig. I-27	
c)	Letdown line shut off and re-initiated (maintenance)	30		Fig. I-28	c) and d) have the same transient diagram.
d)	Letdown line shut off and re-initiated (SI)	70		Fig. I-28	
e)	RCS drain	120		Fig. I-29	

Table 8.1-14 CVCS seal injection line design transients (1/3)

Level A						
Mark	Transient		Occurrence	Reference		Remark
				Document	Fig. or Table	
I-a	Plant heat-up (50F/h)		120	Ref. 4	Fig. I-1	
I-b	Plant cooldown (100F/h)		120		Fig. I-2	Including the transient of Loss of offsite power with natural circulation cooldown (10 times) and Safe shutdown (1 time) .
I-c-1	Ramp load increase between 15% and 100% of full power (5% of full power per minute)		600		Fig. I-3	
I-c-2	Ramp load increase between 50% and 100% of full power (5% of full power per minute)		19, 200		Fig. I-4	
I-d-1	Ramp load decrease between 15% and 100% of full power (5% of full power per minute)		600		Fig. I-5	
I-d-2	Ramp load decrease between 50% and 100% of full power (5% of full power per minute)		19, 200		Fig. I-6	
I-e	Step load increase of 10% of full power		600		Fig. I-7	
I-f	Step load decrease of 10% of full power		600		Fig. I-8	
I-g	Large step load decrease with turbine bypass		60		Fig. I-9	
I-h	Steady-state fluctuation and load regulation	i) Steady-state fluctuation	1×10^6		–	P_p±50psi, T_{hot}, T_{cold}, T_{ave}±3.1F
		ii) Load regulation	8×10^5		Table 4	
I-i	Main feedwater cycling		2, 100		Fig. I-10	
I-j	Refueling		60		Fig. I-11	Water is replaced in 10 minutes.
I-k	Ramp load increase between 0% and 15% of full power		600		Fig. I-12	
I-l	Ramp load decrease between 0% and 15% of full power		600		Fig. I-13	
I-m	RCP startup		3, 000		Fig. I-14	
I-n	RCP shutdown		3, 000		Fig. I-15	
I-o	Core lifetime extension		60		Fig. I-16	
I-p	Primary leakage test		120		Fig. I-17	
I-q	Turbine roll test		10		Fig, I-18	

Table 8.1-14 CVCS seal injection line design transients (2/3)

Level B						
Mark	Transient		Occurrence	Reference		Remark
				Document	Fig. or Table	
II-a	Loss of load		60	Ref. 4	Fig. II-1	
II-b	Loss of offsite power		60		Fig. II-2	
II-c	Partial loss of reactor coolant flow		30		Fig. II-3	
II-d	Reactor trip from full power	i) With no inadvertent cooldown	60		Fig. II-4	
		ii) With cooldown and no safety injection	30		Fig. II-5	Including the transient of Excessive feedwater flow
		iii) With cooldown and safety injection	10		Fig. II-6	
II-e	Inadvertent RCS depressurization		30		Fig. II-7	
II-f	Control rod drop		30		Fig. II-8	
II-g	Inadvertent safeguards actuation		30		Fig. II-9	
II-h	Emergency feedwater cycling		700		Fig. II-10	
II-i	Cold over-pressure		30		Fig. II-11	
II-j	Excessive feedwater flow		—		—	Be covered with the transient of Reactor trip from full power ii)
II-k	Loss of offsite power with natural circulation cooldown		—		—	Be covered with the transient of Plant cooldown
II-l	Partial loss of emergency feedwater		30		—	Please use the figure of the transient of Loss of offsite power.
II-m	Safe shutdown		—		—	Be covered with the transient of Plant cooldown

Table 8.1-14 CVCS seal injection line design transients (3/3)

Mark	Transient	Occurrence	Reference		Remark
			Document	Fig. or Table	
Level C					
III-a	Small loss of coolant accident	5	Ref. 4	Fig. III-1	
III-b	Small steam line break	5		Fig. III-2	
III-c	Complete loss of flow	5		Fig. III-3	
III-d	Small feedwater line break	5		Fig. III-4	
III-e	SG tube rupture	5		Fig. III-5	
Level D					
IV-a	Large loss of coolant accident	1	Ref. 4	Fig. IV-1	
IV-b	Large steam line break	1		Fig. IV-2	
IV-c	RCP locked rotor	1		Fig. IV-3	
IV-d	Control rod ejection	1		Fig. IV-4	
IV-e	Large feedwater line break	1		Fig. IV-5	
Test					
V-a	Primary-side hydrostatic test	10	Ref. 4	–	

8.2 LOAD COMBINATIONS

The loading conditions consist of various combinations of pressure, thermal and external loads.

The loads combinations considered in the analysis are listed in the Table below.

Table 8.2-1 Loadings to be considered for various Load Condition

Loading Conditions	Design	Level A/B	Level C	Level D
Design Pressure	✓			
Maximum Operating Pressure		✓	✓	✓
Dead Load	✓		✓	✓
Mechanical load (pressurizer safety valve and safety depressurization valve thrust load)	✓	✓	✓	✓
Level A thermal, pressure transient load		✓		
Level B thermal, pressure transient load		✓		
Level C pressure transient load			✓	
Level D pressure transient load				✓
1/3 SSE Loads		✓		
SSE Loads				✓
Design Basis Pipe Break				✓

9.0 METHODOLOGY

9.1 LOGIC DIAGRAM OF EVALUATION

For the Reactor Coolant Branch Piping, piping that exceeds 1 inch was evaluated according to NB-3650 (Reference 7) and 1 inch or smaller than 1 inch piping was evaluated according to NC-3650 (Reference 7).The evaluation logic diagrams are shown in Figure 9.1-1 and Figure 9.1-2.

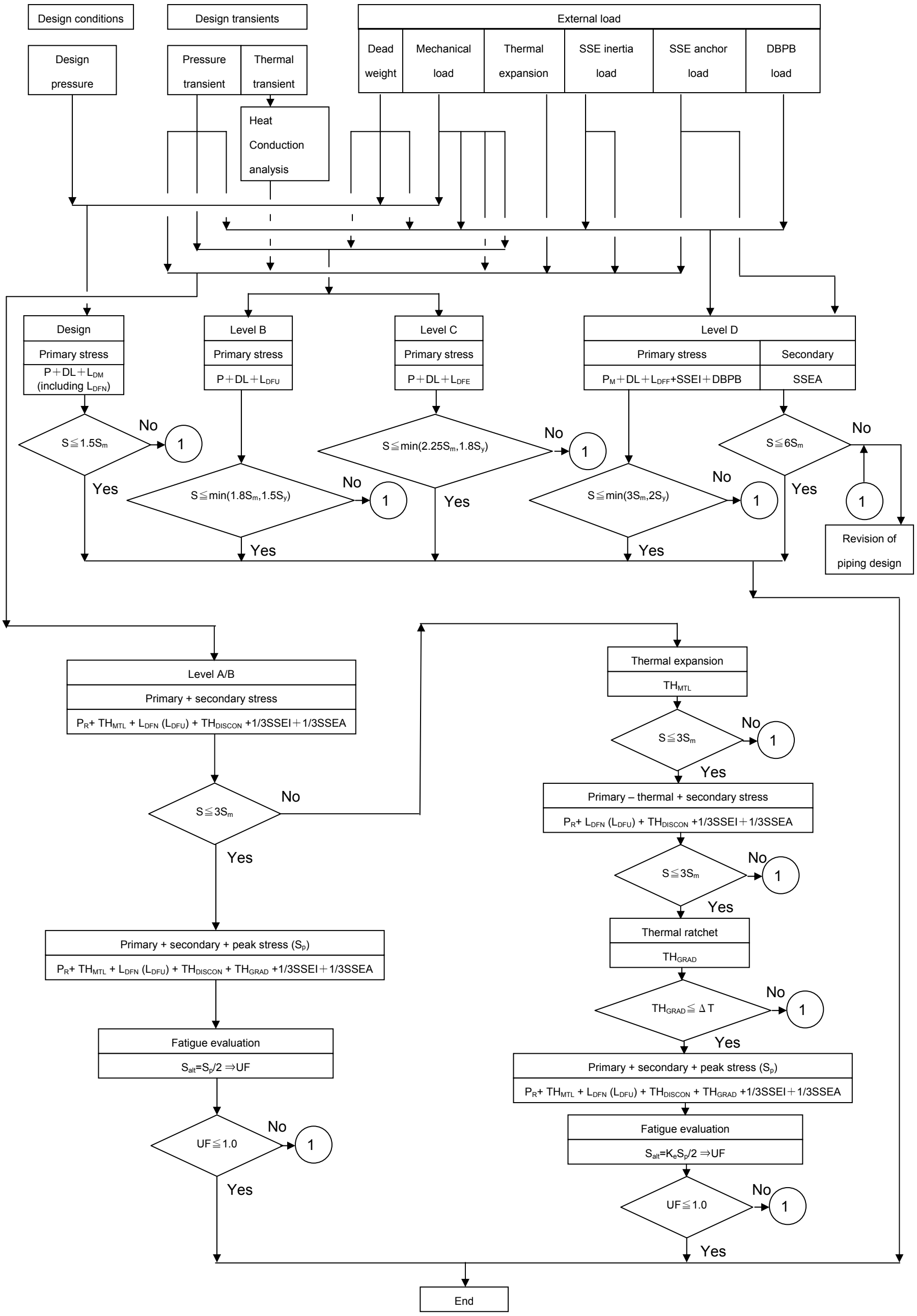

Note 1: In addition to the logic diagram shown above, permissible pressure was evaluated for Levels B, C, and D.

Figure 9.1-1 Evaluation Logic Diagram (greater than 1 inch piping)

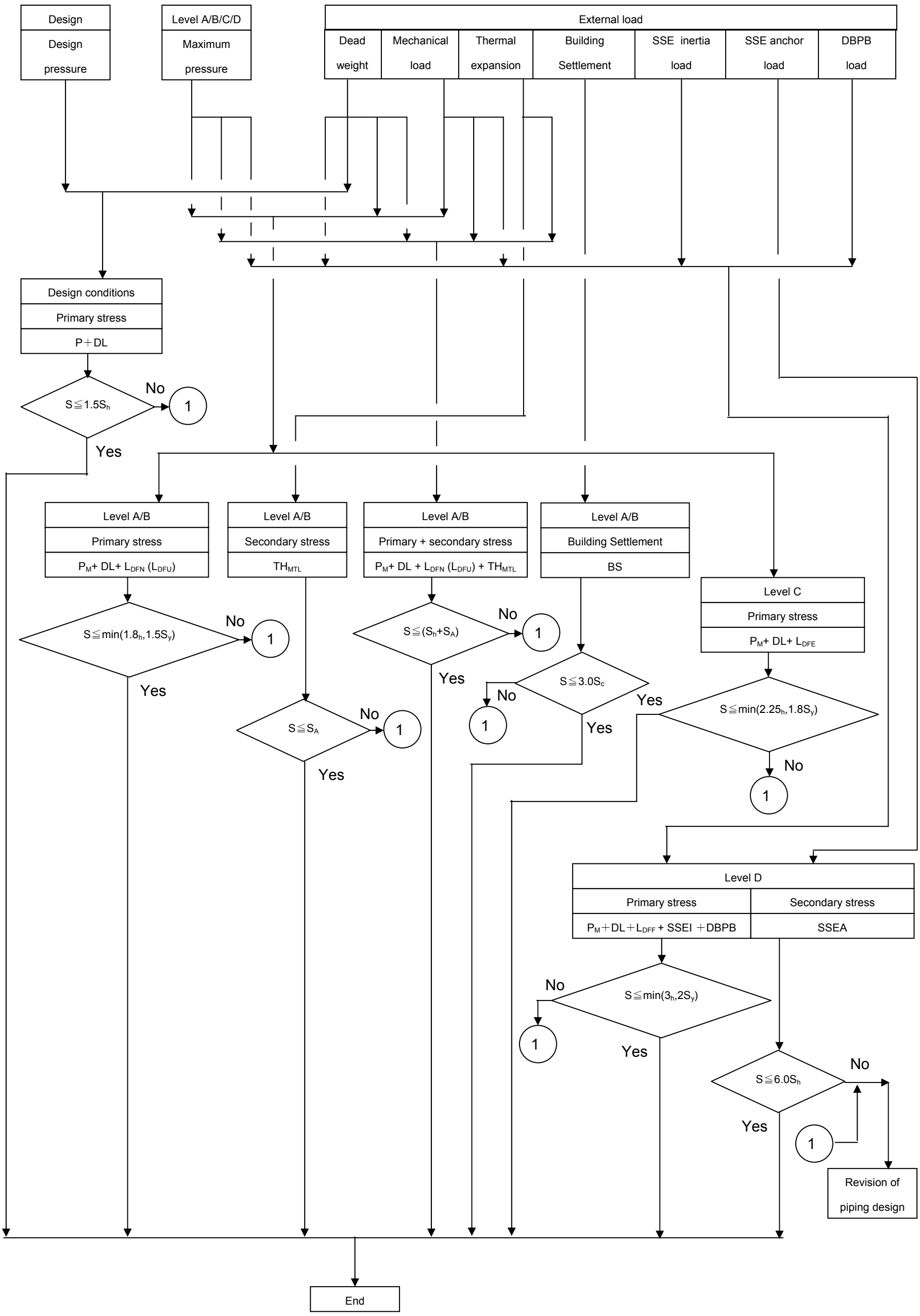

Note 1: Either secondary stress evaluation or primary plus secondary stress evaluation may be used.

Figure 9.1-2 Evaluation Logic Diagram (1 inch or smaller piping)

9.2 STRUCTURAL ANALYSIS

A structural analysis was performed with the following conditions according to the Piping Design Criteria (Reference 2).

9.2.1 Analysis model

For dynamic analysis, the piping system is idealized as a three dimensional space frame. The analysis model consists of a sequence of nodes connected by straight pipe elements and curved pipe elements with stiffness properties representing the piping, and other in-line components.

Piping restraints and supports are idealized as zero length springs with appropriate stiffness values for the restrained degrees of freedom.

In the dynamic mathematical model, the distributed mass of the system, including pipe, contents, and insulation weight, is represented as lumped masses located at each node, which is designated as a mass point.

The following formula is used to determine the spacing between two successive mass points. The PIPESTRESS program uses this formula for mass point spacing.

$$L = \sqrt{\left[\frac{K}{F_R}\right]\sqrt{\frac{EI}{W}}}$$

where

K = 0.743

L = Mass point spacing (ft)

F_R = Cut-off frequency (Hz)

E = Modulus of elasticity of pipe material (psi)

I = Moment of inertia of pipe cross-section (in^4)

W = Mass per unit length of piping + insulation + contents (lbm/ft)

Concentrated weights of in-line components, such as valves, flanges, and instrumentation, are also modeled as lumped masses.

Torsional effects of eccentric masses are included in the analysis.

Seismic analysis of RCL branch lines including DVI lines, decoupled from the analysis model of the RCL or RV, were performed using the applicable envelope response spectra for the RCL or RV considering the connection point as an anchor. The movements (displacements and rotations) of the RCL and RV from the thermal, SAM or pipe break analysis were applied as anchor movement with their respective load cases in the decoupled branch line analysis.

As to the seismic analysis model of the Pressurizer branch lines such as Surge line, Spray line, Safety Depressurization valve line and Safety valve line, the Pressurizer analysis model in reference 3 was coupled with these branch line analyses.

9.2.2 Seismic Analysis Method

9.2.2.1 Damping Values

The damping value used for the SSE was generally 4%, which is consistent with Table 3 of the RG 1.61, Rev.1. In the case when Pressurizer analysis model was coupled with piping analysis model as described above, 3% damping which was used for seismic analysis of Pressurizer was conservatively used.

9.2.2.2 Combination of Modal Responses

For piping systems with no closely spaced modes, the SRSS method was applied to obtain the representative maximum response of each element, for each direction of excitation. A 10% grouping method was used for combining the responses of closely spaced modes.

9.2.2.3 High-Frequency Mode

The PIPESTRESS computer program was used for analyzing the piping systems. This program uses the LOF method to calculate the effect of the high frequency rigid modes. The results obtained were treated as an additional modal result from a non-closely spaced last

mode, and were combined with other modal responses by the methods described in Subsection 9.2.2.2.

9.2.2.4 Directional Combination

The collinear responses due to each of the three spatial input components of motion were combined using the SRSS method

9.2.2.5 Seismic Anchor Motion

The effects of differential displacements of equipment or structures to which the piping system attaches during a SSE were considered.

The analysis of these seismic anchor motions (SAMs) was performed as a static analysis with all dynamic supports active. The results of this analysis were combined with the piping system seismic inertia analysis results by absolute summation.

Where supports were located within a single structure, the seismic motions were considered to be in-phase and the relative displacement between the support locations was considered in the analysis. Where supports were located within different structures, the seismic motions at these locations were assumed to move 180 degrees out-of-phase while performing the analysis.

9.2.2.6 Independent Support Motion Method

The supports were divided into support groups. Each support group was made up of supports that had similar time-history input. The responses caused by each support group were combined by the ABS method. The modal and directional responses were then combined as discussed above. Floor response spectrum curves used for ISM were generated using damping values identified in Section 9.2.2.1.

9.2.3 Time-History Method

The fluid transient analysis was performed to provide the hydraulic transient input for the pressurizer safety valve and safety depressurization valve piping using RELAP5-3D (Reference 7). The time history hydraulic forces were calculated using the pressure transient, flow rate, and other fluid property obtained by the fluid transient analysis. The structural time history analysis was performed using PIPESTRESS (Reference 8) by modal superposition method.

9.3 THERMAL STRESS ANALYSIS

A heat conduction analysis was performed to obtain the piping temperature distribution during a thermal transient. For heat conduction analysis, the ABAQUS (Reference 10) general finite element method program was used.

In the heat conduction analysis, the temperature distribution was obtained for structural discontinuities (valves or reducers, for example) and in the piping plate thickness direction during the transient. From those results, the temperatures, Ta and Tb, of the structural discontinuity, and the temperature differences of the inner and outer pipe surfaces, ΔT1 and ΔT2, were computed using our independently developed P4TEDIA program (see section 10).

Of the Level A and Level B transients, the transient that applied to each system was used. The change in the fluid temperature and heat transfer coefficient at the inner surface of the piping were used. The heat transfer coefficient used was the value obtained from the equation, described below (Gnielinski's equation), for turbulent flow within a cylindrical pipe. The outer surface of the piping was considered as a heat-retaining insulator.

$$Nu = \frac{(f/2)(Re-1000)Pr}{1+12.7(f/2)^{1/2}(Pr^{2/3}-1)}$$

$$0.5 \le Pr \le 2000$$

$$2300 \le Re \le 5\times10^{6}$$

$$1/f^{0.5} = 1.5635\ell n(Re/7) \qquad (4\times10^{3} \le Re \le 1\times10^{7})$$

$$\alpha = Nu \cdot \lambda / d$$

$$Re = u \cdot d / \nu$$

Nu : Nusselt number
Re : Reynolds number
Pr : Prandtl number
α : Heat transfer coefficient
λ : Thermal conductivity of fluid
ν : Kinematic viscosity of fluid
u : Flow velocity
d : Inner diameter of pipe

9.4 STRESS EVALUATION

Stress limits for design and service loadings are as follows.

9.4.1 Piping that exceeds 1 inch (evaluated according to NB-3650)

(1) Design limit

(a) Primary stress evaluation (eq.9)

$$B_1 \frac{PD_0}{2t} + B_2 \frac{D_0}{2I} M_i \leq 1.5 S_m$$

B_1, B_2: Stress indices
P: Design pressure
D_0: Outside diameter
t: Wall thickness
I: Moment of inertia
M_i: Dead weight, mechanical load (pressurizer safety depressurization valve and safety valve water hammer load) moment

(2) Level A/B service limits

(a) primary plus secondary stress evaluation (eq.10)

$$S_n = C_1 \frac{P_0 D_0}{2t} + C_2 \frac{D_0}{2I} M_i + C_3 E\alpha \left| T_a - T_b \right| \leq 3 S_m$$

C_1, C_2: Stress indices
P_0: Pressure range
M_i: Moment ranges for following loads. Thermal expansion, mechanical load (pressurizer safety depressurization valve and safety valve water hammer load), seismic inertia load (1/3SSE), seismic anchor load (1/3SSE)
E: modulus of elasticity (room temperature)
α: Coefficient of thermal expansion (room temperature)
Ta-Tb: Structural discontinuity temperature difference range

(b) Primary plus secondary plus peak stress evaluation (Eq.11)

$$S_p = K_1 C_1 \frac{P_0 D_0}{2t} + K_2 C_2 \frac{D_0}{2I} M_i + \frac{1}{2(1-\nu)} K_3 E\alpha \left| \Delta T_1 \right| + K_3 C_3 E\alpha \left| T_a - T_b \right| + \frac{1}{1-\nu} E\alpha \left| \Delta T_2 \right|$$

K_1, K_2, K_3: Stress indices
ΔT_1:Absolute value of the range of the temperature difference between the temperature of the outside T_0 and the temperature of the inside surface T_1 of the piping product assuming moment generating equivalent linear temperature distribution
ΔT_2: Absolute value of the range for that portion of the nonlinear thermal gradient through the wall thickness not included in ΔT_1.
v: Poisson's ratio (=0.3)

Sp is computed to obtain the stress intensity Salt for the fatigue analysis described later. Sp does not have any allowable stress.

(c) Fatigue evaluation

For $S_n \leq 3S_m$

$$S_{alt} = \frac{S_p}{2},$$

$$UF \leq 1.0$$

(d) Simplified elastic-plastic discontinuity analysis

For $S_n > 3S_m$

1)

$$S_e = C_2 \frac{D_0}{2I} M_i^* \leq 3S_m \quad \text{(eq.12)}$$

M^*_i: Thermal expansion (including anchor movements) moment range

2)

$$C_1 \frac{P_0 D_0}{2t} + C_2 \frac{D_0}{2I} M_i + C_3' E\alpha \left| T_a - T_b \right| \leq 3S_m \quad \text{(eq.13)}$$

M_i: Moment ranges for following loads. Dead weight, mechanical load (pressurizer safety depressurization valve and safety valve water hammer load), seismic inertial load (1/3SSE), seismic anchor load (1/3SSE)

C_3': Stress index

3) Fatigue Evaluation

$$S_{alt} = K_e \frac{S_p}{2} \quad \text{(eq.14)}$$

$$UF \leq 1.0$$

where

$K_e = 1.0$ ・・・ $S_n \leqq 3S_m$

$K_e = 1.0 + \frac{1-n}{n(m-1)}\left(\frac{S_n}{3S_m} - 1\right)$ ・・・ $3S_m < S_n < 3mS_m$

$K_e = \frac{1}{n}$ ・・・ $S_n \geqq 3mS_m$

n=0.3, m=1.7 ・・・ for austenitic stainless steel

4)

$$\Delta T_1 range \leq_e \frac{y'S_y}{0.7E\alpha} C_4$$

x	0.3	0.5	0.7	0.8
y′	3.33	2.00	1.20	0.80

$$x = \frac{PD_0}{2t}\frac{1}{S_y}$$

P: maximum pressure for the set of conditions under consideration
C4: 1.3 (austenitic stainless steel)
Sy: Yield point at the average fluid temperature of the load set

(3) Level B service limits

(a) Permissible pressure

$$P_M \leq 1.1P_a$$

$$P_a = \frac{2S_m t}{D_0 - 2yt}$$

P_m: maximum pressure for Level B
y:0.4

(b) Primary stress evaluation (eq.9)

$$B_1 \frac{PD_0}{2t} + B_2 \frac{D_0}{2I} M_i \leq \min(1.8S_m, 1.5S_y)$$

P: Maximum pressure for Level B
M_i: Moment ranges for following loads. Dead weight, mechanical load (pressurizer safety depressurization valve and safety valve water hammer load)

(4) Level C service limits

(a) Permissible pressure

$$P_M \leq 1.5P_a$$

$$P_a = \frac{2S_m t}{D_0 - 2yt}$$

P_m: maximum pressure for Level C
y:0.4

(b) Primary stress evaluation (eq.9)

$$B_1 \frac{PD_0}{2t} + B_2 \frac{D_0}{2I} M_i \leq \min(2.25S_m, 1.8S_y)$$

P: Level C maximum pressure
M_i: Moment ranges for following loads. Dead weight, mechanical load (pressurizer safety depressurization valve and safety valve water hammer load)

(5) Level D service limits

(a) Permissible pressure

$$P_M \leq 2.0 P_a$$

$$P_a = \frac{2 S_m t}{D_0 - 2yt}$$

P_m: maximum pressure for Level D
y:0.4

(b) Primary stress evaluation (eq.9)

$$B_1 \frac{P D_0}{2t} + B_2 \frac{D_0}{2I} M_i \leq \min(3S_m, 2S_y)$$

P: maximum pressure for Level D
M_i: Moment ranges for following loads. Dead weight, mechanical load (pressurizer safety depressurization valve and safety valve water hammer load), SSE seismic inertia load, DBPB load
Note that the SSE seismic inertia load and DBPB load were combined using the SRSS method.

(c) Secondary stress evaluation

$$\frac{C_2 D_0 M_{AM}}{2I} \leq 6.0 S_m$$

$$\frac{F_{AM}}{A_M} \leq S_m$$

M_{AM}: Range of resultant moment due to SSEA
F_{AM}: Amplitude of longitudinal force due to SSEA
A_M: Piping cross-sectional area

9.4.2 1 inch or smaller piping (evaluated according to NC-3650)

(1) Design limit

(a) Primary stress evaluation (eq.8)

$$S_{SL} = B_1 \frac{PD_0}{2t_n} + B_2 \frac{M_A}{Z} \le 1.5S_h$$

B_1, B_2: Stress indices
P: Design pressure
D_0: Outside diameter
t_n: Wall thickness
Z: Section modulus
M_A: Dead weight (no sustained mechanical load other than dead weight)

(2) Level A/B service limits

(a) Primary stress evaluation(eq.9)

$$S_{OL} = B_1 \frac{P_{\max} D_0}{2t_n} + B_2 (\frac{M_A + M_B}{Z}) \le \min(1.8S_h, 1.5S_y)$$

P_{max}: Peak pressure
M_B: mechanical load (this load was not applied in NPS 1 and less piping)

(b) secondary stress evaluation (eq.10)

$$S_E = \frac{iM_c}{Z} \le S_A$$

$$S_A = f(1.25S_c + 0.25S_h)$$

i: Stress intensification factor
M_c: Thermal expansion

(c) primary plus secondary stress evaluation (eq.11)

$$S_{TE} = \frac{PD_0}{4t_n} + 0.75i(\frac{M_A}{Z}) + i(\frac{M_c}{Z}) \le (S_h + S_A)$$

Evaluation may use either (b) or (c).

(d) Building Settlement evaluation (eq.10a)

$$\frac{iM_D}{Z} \le 3.0S_c$$

M_D: Building Settlement load

(3) Level C service limit

(a) primary stress evaluation (eq.9)

$$S_{OL} = B_1 \frac{P_{\max} D_0}{2t_n} + B_2 (\frac{M_A + M_B}{Z}) \le \min(2.25S_h, 1.8S_y)$$

P_{max}: Peak pressure
M_B: Mechanical load (this load was not applied in NPS 1 and less piping),

(4) Level D service limits
(a) Primary stress evaluation (eq.9)

$$S_{OL} = B_1 \frac{P_{\max} D_0}{2t_n} + B_2 (\frac{M_A + M_B}{Z}) \le \min(3S_h, 2S_y)$$

P_{max}: Peak pressure
M_B: Mechanical load (this load was not applied in NPS 1 and less piping), SSE seismic inertia load, DBPB load
Here, SSE seismic inertia load and DBPB load were combined by the SRSS method.

(b) Secondary stress evaluation

$$\frac{C_2 D_0 M_{AM}}{2I} \le 6.0 S_h$$

$$\frac{F_{AM}}{A_M} \le S_h$$

M_{AM}: Range of resultant moment due to SSEA
F_{AM}: Amplitude of longitudinal force due to SSEA
A_M: Piping cross-sectional area

9.5 FATIGUE EVALUATION

The fatigue analysis was based on the rules of NB-3653 of ASME Section III. These rules require calculation of the total stress, including the peak stress, to determine the allowable number of stress cycles for the specified Service Loadings.

The design transients for ASME Level A and B service conditions (Table 8.1-3 to Table 8.1-14) were used in the evaluation of cyclic fatigue. The effect of 300 cycles of a 1/3 SSE seismic event was included in the evaluation of cyclic fatigue, treated as a Level B service condition. The number of cycles was based on equivalent fatigue usage for 20 cycles of a single SSE event.

10.0 COMPUTER PROGRAMS USED

The Table below provides a brief description of each of the computer programs used.

Table 10.0-1 Computer Program Description

No.	Program Name	Version	Description
1	PIPESTRESS	3.6.0	PIPESTRESS is a computer program for the analysis of piping systems. This program is used for the analysis of ASME Code, Section Ⅲ, Class 1, 2, 3 and ASME B31.1 piping systems under various load conditions.
2	ABAQUS	6.7.1	ABAQUS is a general-purpose finite element computer program that performs a wide range of linear and nonlinear engineering simulations. This program is used for temperature distribution analysis and thermal stress analysis according to piping geometries and design transients such as fluid temperature and coefficient of heat transfer.
3	RELAP5-3D	2.4.2	RELAP5-3D is a computer program for the fluid transient analysis. This program is used for the analysis of a behavior, such as water hammer, by modeling flow volume and flow path.
4	P4TEDIA	1.3	P4TEDIA is an in-house program to obtain temperature difference between in-side and out-side of pipe ΔT1, ΔT2 and temperature difference at structural discontinuous point Ta-Tb. This program uses the thermal distribution analysis results generated by ABAQUS.
5	PICEP	06/30/87	PICEP is a program developed by the Electric Power Research Institute. This program is used for predicting leakage rate from assumed through-wall cracks in the leak-before-break evaluation of piping.

All these computer programs were verified and validated in compliance with the MHI quality assurance program. The computer programs were validated using one of the methods described below. Verification tests demonstrate the capability of the computer program to produce valid results for the test problems encompassing the range of permitted usage defined by the program documentation.

- Hand calculations
- Known solution for similar or standard problem
- Acceptable experimental test results
- Published analytical results
- Results from other similar verified programs

11.0 ANALYSIS RESULTS

The calculated stress-to–allowable ratio (calculated stress divided by allowable value), the cumulative fatigue usage factor, and the thermal stress ratchet results for the most limiting locations are summarized in the Table 11.0-1 and 11.0-2. The ASME Code allowable limits were satisfied in all cases.

The detailed analysis models and results for each piping system are described in the Appendix 1.

LBB evaluation was applied for Pressurizer Surge Line , Accumulator Loop A and B Lines and it was confirmed that these lines satisfy the LBB criteria using BAC as described in Appendix 2.

Table 11.0-1 RCL Branch Piping Result Summary (greater than 1 inch piping)

Condition	Service Level	Category	Loading	Equation (NB-3650)	Stress Limit	Stress-to-Allowable Ratio
Design	-	Primary Stress	P, DL, L_{DM} (including L_{DFN})	Eq. 9 NB-3652	1.5 S_m	
Normal /Upset	A/B	Primary + Secondary Stress Intensity Range (SIR)	P_R, TH_{MTL}, TH_{DISCON}, L_{DFN}, L_{DFU}, $SSEI$, $SSEA$	Eq. 10 NB-3653.1	3 S_m	
		Thermal Bending SIR	TH_{MTL}	Eq. 12 NB-3653.6(a)	3 S_m	
		Primary + Secondary Membrane + Bending SIR	P_R, TH_{DISCON}, L_{DFN}, L_{DFU}, $SSEI$, $SSEA$	Eq. 13 NB-3653.6(b)	3 S_m	
		Alternating Stress Intensity (Fatigue)	P_R, TH_{MTL}, TH_{DISCON}, TH_{GRAD}, L_{DFN}, L_{DFU}, $SSEI$, $SSEA$	NB-3653.3 NB-3653.4 NB-3653.5 NB-3653.6(c)	Allowable Value 1	
		Thermal Stress Ratchet	TH_{GRAD} (linear)	NB3653.7	Allowable Temperature	
Upset	B	Permissible Pressure	P_M	NB-3654.1	1.1 Pa	
		Primary Stress	P_M, DL, L_{DFU}	NB-3654.2	Min(1.8 S_m,1.5 S_y)	
Emergency	C	Permissible Pressure	P_M	NB-3655.1	1.5 Pa	
		Primary Stress	P_M, DL, L_{DFE}	NB-3655.2	Min(2.25 S_m,1.8 S_y)	
Faulted	D	Permissible Pressure	P_M	NB-3656(b)	2 Pa	
		Primary Stress	P_M, DL, L_{DFF} $SSEI$, $DBPB$	NB-3656(a) NB-3656(b)	Appendix-F or Min(3 S_m,2 S_y)	
Faulted	D	Secondary Stress	$SSEA$		6 S_m	

Note:
1. Eq.10 was not satisfied and then NB-3653.6 and 7 were evaluated.

Table 11.0-2 RCL Branch Piping Result Summary (1 inch or smaller piping)

Condition	Service Level	Loading	Equation (NC-3650)	Stress Limit	Stress-to-Allowable Ratio
Design	-	*P, DL*	Eq. 8 NC-3652	1.5 S_h	
Normal /Upset	A/B	P_M, *DL*, L_{DFN}, L_{DFU}	Eq. 9 NC-3653.1	Min(1.8 S_h, 1.5 S_y)	
		TH_{MTL}	Eq. 10 NC-3653.2(a)	S_A	
		BS	Eq. 10a NC-3653.2(b)	$3S_c$	
		P_M, *DL*, TH_{MTL}	Eq. 11 NC-3652.2(c)	$S_h + S_A$	
Emergency	C	P_M, *DL*, L_{DFE}	Eq. 9 NC-3654	Min(2.25 S_h,1.8 S_y)	
Faulted	D	P_M, *DL*, L_{DFF}, *SSEI*, *DBPB*	Eq. 9 NC-3655	Min(3 S_h, 2 S_y)	
		SSEA		$6S_h$	

12.0 REFERENCES

1. N0-GB00002 Revision 1 “Class 1 Piping ASME Design Specification (excluding Reactor Coolant Loop Piping)”

2. N0-CF00004 Revision 0 “Piping Design Criteria”

3. N0-GB00005 Revision 1 ”Input Package of Stress Analysis of RCL Branch Piping and Main Steam Piping”

4. N0-EE12001 Revision 2 ”Class 1 Equipment Design Transients”

5. ASME Boiler and Pressure Vessel Code, Section II, Division 1, 2001 Edition through 2003 Addenda

6. IEEE Recommended Practice for Seismic Qualification of Class 1E Equipment for Nuclear Power Generating Stations, IEEE Std 344-2004, Appendix D, Institute of Electrical and Electronic Engineers Power Engineering Society, New York, New York, June 2005.

7. ASME Boiler and Pressure Vessel Code, Section III, Division 1, 1992 Edition through 1992 Addenda

8. INEL,“RELAP5-3D Code manual”,2001

9. DST Computer Services. S.A.,“PIPESTRESS User’s Manual”,Version3.6.0,2007

10. SIMURIA,“ABAQUS Analysis User’s Manual”,Version6.7,2007

11. “Additional Information for Design Completion Plan of US-APWR Piping and Components” UAP-HF-08123, July, 2008.

Appendix 1-1

RC01
Pressurizer Surge Line

Piping Analysis Results

1. INPUT
   - 1.1 Used for creating the pipe structural model
     - 1.1.1 Block division and piping specifications — Table A1-1-1-1
     - 1.1.2 Piping isometrics — Figure A1-1-1-1
     - 1.1.3 Concentrated mass — Table A1-1-1-2
     - 1.1.4 Support point rigidity — Table A1-1-1-3
     - 1.1.5 Valve rigidity — Table A1-1-1-4
   - 1.2 Used for creating load conditions
     - 1.2.1 Level A/B design transient — see main text
     - 1.2.2 Level A/B thermal displacement input data — Table A1-1-1-5
     - 1.2.3 Level A, B temperature and pressure input data — Table A1-1-1-6
     - 1.2.4 Level C, D maximum temperature and pressure input data — Table A1-1-1-7
     - 1.2.5 Floor response curve — Figure A1-1-1-2
     - 1.2.6 Seismic anchor displacement input data — Table A1-1-1-8
     - 1.2.7 DBPB displacement input data — Table A1-1-1-9

2. OUTPUT
   - 2.1 PIPESTRESS analysis model diagram — Figure A1-1-2-1
   - 2.2 Natural frequency analysis results — Table A1-1-2-1
   - 2.3 Frequency mode diagram (primary to tertiary) — Figure A1-1-2-2
   - 2.4 Thermal analysis results (ΔT1, ΔT2, Ta-Tb) — Table A1-1-2-2
   - 2.5 Piping stress and fatigue evaluation results — Table A1-1-2-3
   - 2.6 LBB evaluation results — Figure A1-1-2-3

Table A1-1-1-1 Block division and piping specifications

Figure A1-1-1-1 Piping isometrics

Table A1-1-1-2 Concentrated mass

Table A1-1-1-3 Support point rigidity

Table A1-1-1-4 Valve rigidity

Table A1-1-1-5 Level A/B thermal displacement input data (1/2)
(Point: 9010)

Table A1-1-1-5 Level A/B thermal displacement input data (2/2)
(Point: 9010)

Table A1-1-1-6 Level A, B temperature and pressure input data (1/3)
(Section I)

Table A1-1-1-6 Level A, B temperature and pressure input data (2/3)
(Section I)

Table A1-1-1-6 Level A, B temperature and pressure input data (3/3)
(Section I)

Table A1-1-1-7 Level C, D maximum temperature and pressure input data

Figure A1-1-1-2 Floor response curve (1/12)
Pressurizer Surge Line (RC01) FRS for Piping
X(EW) direction (damping 3.0%)

Figure A1-1-1-2 Floor response curve (2/12)
Pressurizer Surge Line (RC01) FRS for Piping
Y (NS) direction (damping 3.0%)

Figure A1-1-1-2 Floor response curve (3/12)
Pressurizer Surge Line (RC01) FRS for Piping
Z (Vert.) direction (damping 3.0%)

Figure A1-1-1-2 Floor response curve (4/12)
Pressurizer Surge Line (RC01) FRS for MCP Nozzle
X (EW) direction (damping 3.0%)

Figure A1-1-1-2 Floor response curve (5/12)
Pressurizer Surge Line (RC01) FRS for MCP Nozzle
Y (NS) direction (damping 3.0%)

Figure A1-1-1-2 Floor response curve (6/12)
Pressurizer Surge Line (RC01) FRS for MCP Nozzle
Z (Vert.) direction (damping 3.0%)

Figure A1-1-1-2 Floor response curve (7/12)
Pressurizer Surge Line (RC01) FRS for Pressurizer Base Plate
X (EW) direction (damping 3.0%)

Figure A1-1-1-2 Floor response curve (8/12)
Pressurizer Surge Line (RC01) FRS for Pressurizer Base Plate
Y (NS) direction (damping 3.0%)

Figure A1-1-1-2 Floor response curve (9/12)
Pressurizer Surge Line (RC01) FRS for Pressurizer Base Plate
Z (Vert.) direction (damping 3.0%)

Figure A1-1-1-2 Floor response curve (10/12)
Pressurizer Surge Line (RC01) FRS for Pressurizer Support
X (EW) direction (damping 3.0%)

Figure A1-1-1-2 Floor response curve (11/12)
Pressurizer Surge Line (RC01) FRS for Pressurizer Support
Y (NS) direction (damping 3.0%)

Figure A1-1-1-2 Floor response curve (12/12)
Pressurizer Surge Line (RC01) FRS for Pressurizer Support
Z (Vert.) direction (damping 3.0%)

Table A1-1-1-8 Seismic anchor displacement input data

Table A1-1-1-9 DBPB displacement input data

Figure A1-1-2-1 PIPESTRESS analysis model diagram

Table A1-1-2-1 Natural frequency analysis results (1/2)

Table A1-1-2-1 Natural frequency analysis results (2/2)

Figure A1-1-2-2 Frequency mode diagram (primary)

Figure A1-1-2-2 Frequency mode diagram (secondary)

Figure A1-1-2-2 Frequency mode diagram (tertiary)

Table A1-1-2-2 Thermal analysis results (ΔT1, ΔT2, Ta-Tb) (1/3)
(Section I)

Table A1-1-2-2 Thermal analysis results (ΔT1, ΔT2, Ta-Tb) (2/3)
(Section I)

Table A1-1-2-2 Thermal analysis results (ΔT1, ΔT2, Ta-Tb) (3/3)
(Section I)

Table A1-1-2-3 Piping stress and fatigue evaluation results
(Piping that exceeds 1 inch NB–3650 evaluation)

Table A1-1-2-3 Piping stress and fatigue evaluation results
(Piping of 1 inch or less NC–3650 evaluation)

Figure A1-1-2-3 LBB evaluation results

Appendix 1-2

RC02
Pressurizer Spray Line

Piping Analysis Results

1. INPUT

1.1 Used for creating the pipe structural model	
1.1.1 Block division and piping specifications	Table A1-2-1-1
1.1.2 Piping isometrics	Figure A1-2-1-1
1.1.3 Concentrated mass	Table A1-2-1-2
1.1.4 Support point rigidity	Table A1-2-1-3
1.1.5 Valve rigidity	Table A1-2-1-4
1.2 Used for creating load conditions	
1.2.1 Level A/B design transient	see main text
1.2.2 Level A/B thermal displacement input data	Table A1-2-1-5
1.2.3 Level A, B temperature and pressure input data	Table A1-2-1-6
1.2.4 Level C, D maximum temperature and pressure input data	Table A1-2-1-7
1.2.5 Floor response curve	Figure A1-2-1-2
1.2.6 Seismic relative displacement input data	Table A1-2-1-8
1.2.7 DBPB displacement input data	Table A1-2-1-9

2. OUTPUT

2.1 PIPESTRESS analysis Model diagram	Figure A1-2-2-1
2.2 Natural frequency analysis results	Table A1-2-2-1
2.3 Frequency mode diagram (primary to tertiary)	Figure A1-2-2-2
2.4 Thermal analysis results (ΔT1, ΔT2, Ta-Tb)	Table A1-2-2-2
2.5 Piping stress and fatigue evaluation results	Table A1-2-2-3

Table A1-2-1-1 Block division and piping specifications (1/2)

Table A1-2-1-1 Block division and piping specifications (2/2)

Figure A1-2-1-1 Piping isometrics(1/5)

Figure A1-2-1-1 Piping isometrics(2/5)

Figure A1-2-1-1 Piping isometrics(3/5)

Figure A1-2-1-1 Piping isometrics(4/5)

Figure A1-2-1-1 Piping isometrics(5/5)

Table A1-2-1-2 Concentrated mass

Table A1-2-1–3 Support point rigidity

Table A1-2-1-4 Valve rigidity

Table A1-2-1-5 Level A/B thermal displacement input data (1/4)
(Point: 9010)

Table A1-2-1-5 Level A/B thermal displacement input data (2/4)
(Point: 9010)

Table A1-2-1-5 Level A/B thermal displacement input data (3/4)
(Point: 9020)

Table A1-2-1-5 Level A/B thermal displacement input data (4/4)
(Point: 9020)

Table A1-2-1-6 Level A, B temperature and pressure input data(1/18)
(Section I , IX , X)

Table A1-2-1-6 Level A, B temperature and pressure input data(2/18)
(Section I , IX , X)

Table A1-2-1-6 Level A, B temperature and pressure input data(3/18)
(Section I , IX , X)

Table A1-2-1-6 Level A, B temperature and pressure input data(4/18)
(Section II , III)

Table A1-2-1-6 Level A, B temperature and pressure input data(5/18)
(Section II , III)

Table A1-2-1-6 Level A, B temperature and pressure input data(6/18)
(Section II , III)

Table A1-2-1-6 Level A, B temperature and pressure input data(7/18)
(Section IV , V , VI , VII , VIII,XII)

Table A1-2-1-6 Level A, B temperature and pressure input data(8/18)
(Section IV , V , VI , VII , VIII ,XII)

Table A1-2-1-6 Level A, B temperature and pressure input data(9/18)
(Section IV , V , VI , VII , VIII ,XII)

Table A1-2-1-6 Level A, B temperature and pressure input data(10/18)
(Section XI)

Table A1-2-1-6 Level A, B temperature and pressure input data(11/18)
(Section XI)

Table A1-2-1-6 Level A, B temperature and pressure input data(12/18)
(Section XI)

Table A1-2-1-6 Level A, B temperature and pressure input data(13/18)
(Section XIII)

Table A1-2-1-6 Level A, B temperature and pressure input data(14/18)
(Section XIII)

Table A1-2-1-6 Level A, B temperature and pressure input data(15/18)
(Section XIII)

Table A1-2-1-6 Level A, B temperature and pressure input data(16/18)
(Section XIV)

Table A1-2-1-6 Level A, B temperature and pressure input data(17/18)
(Section XIV)

Table A1-2-1-6 Level A, B temperature and pressure input data(18/18)
(Section XIV)

Table A1-2-1-7 Level C, D maximum temperature and pressure input data

Figure A1-2-1-2 Floor response curve (1/12)
Pressurizer Spray Line (RC02) FRS for piping
X (EW) direction (damping 3.0%)

Figure A1-2-1-2 Floor response curve (2/12)
Pressurizer Spray Line (RC02) FRS for piping
Y (NS) direction (damping 3.0%)

Figure A1-2-1-2 Floor response curve (3/12)
Pressurizer Spray Line (RC02) FRS for piping
Z (Vert.) direction (damping 3.0%)

Figure A1-2-1-2 Floor response curve (4/12)
Pressurizer Spray Line (RC02) FRS for MCP nozzle
X (EW) direction (damping 3.0%)

Figure A1-2-1-2 Floor response curve (5/12)
Pressurizer Spray Line (RC02) FRS for MCP nozzle
Y (NS) direction (damping 3.0%)

Figure A1-2-1-2 Floor response curve (6/12)
Pressurizer Spray Line (RC02) FRS for MCP nozzle
Z (Vert.) direction (damping 3.0%)

Figure A1-2-1-2 Floor response curve (7/12)
Pressurizer Spray Line (RC02) FRS for Pressurizer base plate
X (EW) direction (damping 3.0%)

Figure A1-2-1-2 Floor response curve (8/12)
Pressurizer Spray Line (RC02) FRS for Pressurizer base plate
Y (NS) direction (damping 3.0%)

Figure A1-2-1-2 Floor response curve (9/12)
Pressurizer Spray Line (RC02) FRS for Pressurizer base plate
Z (Vert.) direction (damping 3.0%)

Figure A1-2-1-2 Floor response curve (10/12)
Pressurizer Spray Line (RC02) FRS for Pressurizer support
X (EW) direction (damping 3.0%)

Figure A1-2-1-2 Floor response curve (11/12)
Pressurizer Spray Line (RC02) FRS for Pressurizer support
Y (NS) direction (damping 3.0%)

Figure A1-2-1-2 Floor response curve (12/12)
Pressurizer Spray Line (RC02) FRS for Pressurizer support
Z (Vert.) direction (damping 3.0%)

Table A1-2-1-8 Seismic relative displacement input data

Table A1-2-1-9 DBPB displacement input data

Figure A1-2-2-1 PIPESTRESS analysis model diagram

Table A1-2-2-1 Natural frequency analysis results (1/2)

Table A1-2-2-1 Natural frequency analysis results(2/2)

Figure A1-2-2-2 Frequency mode diagram (primary)

Figure A1-2-2-2 Frequency mode diagram (secondary)

Figure A1-2-2-2 Frequency mode diagram (tertiary)

Table A1-2-2-2 Thermal analysis results (ΔT1, ΔT2, Ta-Tb) (1/39)
(Section I)

Table A1-2-2-2 Thermal analysis results (ΔT1, ΔT2, Ta-Tb) (2/39)
(Section I)

Table A1-2-2-2 Thermal analysis results (ΔT1, ΔT2, Ta-Tb) (3/39)
(Section I)

Table A1-2-2-2 Thermal analysis results (ΔT1, ΔT2, Ta-Tb) (4/39)
(Section II)

Table A1-2-2-2 Thermal analysis results (ΔT1, ΔT2, Ta-Tb) (5/39)
(Section II)

Table A1-2-2-2 Thermal analysis results (ΔT1, ΔT2, Ta-Tb) (6/39)
(Section II)

Table A1-2-2-2 Thermal analysis results (ΔT1, ΔT2, Ta-Tb)(7/39)
(Section III)

Table A1-2-2-2 Thermal analysis results (ΔT1, ΔT2, Ta-Tb) (8/39)
(Section III)

Table A1-2-2-2 Thermal analysis results (ΔT1, ΔT2, Ta-Tb) (9/39)
(Section III)

Table A1-2-2-2 Thermal analysis results (ΔT1, ΔT2, Ta-Tb)(10/39)
(Section IV)

Table A1-2-2-2 Thermal analysis results (ΔT1, ΔT2, Ta-Tb)(11/39)
(Section IV)

Table A1-2-2-2 Thermal analysis results (ΔT1, ΔT2, Ta-Tb) (12/39)
(Section IV)

Table A1-2-2-2 Thermal analysis results (ΔT1, ΔT2, Ta-Tb) (13/39)
(Section V)

Table A1-2-2-2 Thermal analysis results (ΔT1, ΔT2, Ta-Tb)(14/39)
(Section V)

Table A1-2-2-2 Thermal analysis results (ΔT1, ΔT2, Ta-Tb) (15/39)
(Section V)

Table A1-2-2-2 Thermal analysis results (ΔT1, ΔT2, Ta-Tb) (16/39)
(Section VI)

Table A1-2-2-2 Thermal analysis results (ΔT1, ΔT2, Ta-Tb) (17/39)
(Section VI)

Table A1-2-2-2 Thermal analysis results (ΔT1, ΔT2, Ta-Tb) (18/39)
(Section VI)

Table A1-2-2-2 Thermal analysis results (ΔT1, ΔT2, Ta-Tb) (19/39)
(Section VII)

Table A1-2-2-2 Thermal analysis results (ΔT1, ΔT2, Ta-Tb) (20/39)
(Section VII)

Table A1-2-2-2 Thermal analysis results (ΔT1, ΔT2, Ta-Tb) (21/39)
(Section VII)

Table A1-2-2-2 Thermal analysis results (ΔT1, ΔT2, Ta-Tb) (22/39)
(Section VIII)

Table A1-2-2-2 Thermal analysis results (ΔT1, ΔT2, Ta-Tb) (23/39)
(Section VIII)

Table A1-2-2-2 Thermal analysis results (ΔT1, ΔT2, Ta-Tb) (24/39)
(Section VIII)

Table A1-2-2-2 Thermal analysis results (ΔT1, ΔT2, Ta-Tb) (25/39)
(Section IX)

Table A1-2-2-2 Thermal analysis results (ΔT1, ΔT2, Ta-Tb) (26/39)
(Section IX)

Table A1-2-2-2 Thermal analysis results (ΔT1, ΔT2, Ta-Tb) (27/39)
(Section IX)

Table A1-2-2-2 Thermal analysis results (ΔT1, ΔT2, Ta-Tb) (28/39)
(Section X)

Table A1-2-2-2 Thermal analysis results (ΔT1, ΔT2, Ta-Tb) (29/39)
(Section X)

Table A1-2-2-2 Thermal analysis results (ΔT1, ΔT2, Ta-Tb) (30/39)
(Section X)

Table A1-2-2-2 Thermal analysis results (ΔT1, ΔT2, Ta-Tb) (31/39)
(Section XI)

Table A1-2-2-2 Thermal analysis results (ΔT1, ΔT2, Ta-Tb) (32/39)
(Section XI)

Table A1-2-2-2 Thermal analysis results (ΔT1, ΔT2, Ta-Tb) (33/39)
(Section XI)

Table A1-2-2-2 Thermal analysis results (ΔT1, ΔT2, Ta-Tb)(34/39)
(Section XII)

Table A1-2-2-2 Thermal analysis results (ΔT1, ΔT2, Ta-Tb)(35/39)
(Section XII)

Table A1-2-2-2 Thermal analysis results (ΔT1, ΔT2, Ta-Tb) (36/39)
(Section XI)

Table A1-2-2-2 Thermal analysis results (ΔT1, ΔT2, Ta-Tb) (37/39)
(Section XIII)

Table A1-2-2-2 Thermal analysis results (ΔT1, ΔT2, Ta-Tb) (38/39)
(Section XⅢ)

Table A1-2-2-2 Thermal analysis results (ΔT1, ΔT2, Ta-Tb) (39/39)
(Section XI)

Table A1-2-2-3 Piping stress and fatigue evaluation results
(Piping that exceeds 1 inch NB–3650 evaluation)

Table A1-2-2-3 Piping stress and fatigue evaluation results
(Piping of 1 inch or less NC–3650 evaluation)

Appendix 1-3

RC03
Pressurizer Safety Depressurization Valve Line

Piping Analysis Results

1. INPUT
1.1 Used for creating the pipe structural model
1.1.1 Block division and piping specifications Table A1-3-1-1
1.1.2 Piping isometrics Figure A1-3-1-1
1.1.3 Concentrated mass Table A1-3-1-2
1.1.4 Support point rigidity Table A1-3-1-3
1.1.5 Valve rigidity Table A1-3-1-4
1.2 Used for creating load conditions
1.2.1 Level A/B design transient see main text
1.2.2 Level A/B thermal displacement input data Table A1-3-1-5
1.2.3 Level A, B temperature and pressure input data Table A1-3-1-6
1.2.4 Level C, D maximum temperature and pressure input data Table A1-3-1-7
1.2.5 Floor response curve Figure A1-3-1-2
1.2.6 Seismic anchor displacement input data Table A1-3-1-8
1.2.7 DBPB displacement input data Table A1-3-1-9
1.2.8 Initial condition and valve open characteristics (Water hammer) Table A1-3-1-10

2. OUTPUT
2.1 PIPESTRESS analysis model diagram Figure A1-3-2-1
2.2 Water hammer analysis model diagram Figure A1-3-2-2
2.3 Natural frequency analysis results Table A1-3-2-1
2.4 Frequency mode diagram (primary to tertiary) Figure A1-3-2-3
2.5 Thermal analysis results (ΔT1, ΔT2, Ta-Tb) Table A1-3-2-2
2.6 Piping stress and fatigue evaluation results Table A1-3-2-3

Table A1-3-1-1 Block division and piping specifications (1/3)

Table A1-3-1-1 Block division and piping specifications (2/3)

Table A1-3-1-1 Block division and piping specifications (3/3)

*1 CIL: Capsule insulation containing lead , RMI: Reflective metal insulation , FI: Fibrous insulation
*2 Cladding weight is included in the insulation weight

Figure A1-3-1-1 Piping isometrics(1/3)

Figure A1-3-1-1 Piping isometrics(2/3)

Figure A1-3-1-1 Piping isometrics(3/3)

Table A1-3-1-2 Concentrated mass

Table A1-3-1-3 Support point rigidity

Table A1-3-1-4 Valve rigidity

Table A1-3-1-5 Level A/B thermal displacement input data
(Point: -)

Table A1-3-1-6 Level A, B temperature and pressure input data (1/21)
(Section I)

Table A1-3-1-6 Level A, B temperature and pressure input data (2/21)
(Section I)

Table A1-3-1-6 Level A, B temperature and pressure input data (3/21)
(Section I)

Table A1-3-1-6 Level A, B temperature and pressure input data (4/21)
(Section II)

Table A1-3-1-6 Level A, B temperature and pressure input data (5/21)
(Section II)

Table A1-3-1-6 Level A, B temperature and pressure input data (6/21)
(Section II)

Table A1-3-1-6 Level A, B temperature and pressure input data (7/21)
(Section III)

Table A1-3-1-6 Level A, B temperature and pressure input data (8/21)
(Section III)

Table A1-3-1-6 Level A, B temperature and pressure input data (9/21)
(Section III)

Table A1-3-1-6 Level A, B temperature and pressure input data (10/21)
(Section IV)

Table A1-3-1-6 Level A, B temperature and pressure input data (11/21)
(Section IV)

Table A1-3-1-6 Level A, B temperature and pressure input data (12/21)
(Section IV)

Table A1-3-1-6 Level A, B temperature and pressure input data (13/21)
(Section V)

Table A1-3-1-6 Level A, B temperature and pressure input data (14/21)
(Section V)

Table A1-3-1-6 Level A, B temperature and pressure input data (15/21)
(Section V)

Table A1-3-1-6 Level A, B temperature and pressure input data (16/21)
(Section VI)

Table A1-3-1-6 Level A, B temperature and pressure input data (17/21)
(Section VI)

Table A1-3-1-6 Level A, B temperature and pressure input data (18/21)
(Section VI)

Table A1-3-1-6 Level A, B temperature and pressure input data (19/21)
(Section VII)

Table A1-3-1-6 Level A, B temperature and pressure input data (20/21)
(Section VII)

Table A1-3-1-6 Level A, B temperature and pressure input data (21/21)
(Section VII)

Table A1-3-1-7 Level C, D maximum temperature and pressure input data

Figure A1-3-1-2 Floor response curve (1/9)
Pressurizer Safety Depressurization Valve Line (RC03) FRS for Pressurizer base plate
X (EW) direction (damping 3.0%)

Figure A1-3-1-2 Floor response curve (2/6)
Pressurizer Safety Depressurization Valve Line (RC03) FRS for Pressurizer base plate
Y (NS) direction (damping 3.0%)

Figure A1-3-1-2 Floor response curve (3/9)
Pressurizer Safety Depressurization Valve Line (RC03) FRS for Pressurizer base plate
Z (Vert.) direction (damping 3.0%)

Figure A1-3-1-2 Floor response curve (4/9)
Pressurizer Safety Depressurization Valve Line (RC03) FRS for Pressurizer support
X (EW) direction (damping 3.0%)

Figure A1-3-1-2 Floor response curve (5/9)
Pressurizer Safety Depressurization Valve Line (RC03) FRS for Pressurizer support
Y (NS) direction (damping 3.0%)

Figure A1-3-1-2 Floor response curve (6/9)
Pressurizer Safety Depressurization Valve Line (RC03) FRS for Pressurizer support
Z (Vert.) direction (damping 3.0%)

Figure A1-3-1-2 Floor response curve (7/9)
Pressurizer Safety Depressurization Valve Line (RC03) FRS for Piping
X (EW) direction (damping 3.0%)

Figure A1-3-1-2 Floor response curve (8/9)
Pressurizer Safety Depressurization Valve Line (RC03) FRS for Piping
Y (NS) direction (damping 3.0%)

Figure A1-3-1-2 Floor response curve (9/9)
Pressurizer Safety Depressurization Valve Line (RC03) FRS for Piping
Z (Vert.) direction (damping 3.0%)

Table A1-3-1-8 Seismic anchor displacement input data

Table A1-3-1-9 DBPB displacement input data

Table A1-3-1-10 Initial condition and valve open characteristics (Water hammer)

Figure A1-3-2-1 PIPESTRESS analysis model diagram

Figure A1-3-2-2 Water hammer analysis model diagram (1/2)
Analysis model for Pressurizer safety depressurization valve water hammer calculation

Figure A1-3-2-2 Water hammer analysis model diagram (2/2)
Analysis model for Pressurizer safety valve water hammer calculation

Table A1-3-2-1 Natural frequency analysis results

Figure A1-3-2-3 Frequency mode diagram (primary)

Figure A1-3-2-3 Frequency mode diagram (secondary)

Figure A1-3-2-3 Frequency mode diagram (tertiary)

Table A1-3-2-2 Thermal analysis results (ΔT1, ΔT2, Ta-Tb) (1/15)
(Section I)

Table A1-3-2-2 Thermal analysis results (ΔT1, ΔT2, Ta-Tb) (2/15)
(Section I)

Table A1-3-2-2 Thermal analysis results (ΔT1, ΔT2, Ta-Tb) (3/15)
(Section I)

Table A1-3-2-2 Thermal analysis results (ΔT1, ΔT2, Ta-Tb) (4/15)
(Section II)

Table A1-3-2-2 Thermal analysis results (ΔT1, ΔT2, Ta-Tb) (5/15)
(Section II)

Table A1-3-2-2 Thermal analysis results (ΔT1, ΔT2, Ta-Tb) (6/15)
(Section II)

Table A1-3-2-2 Thermal analysis results (ΔT1, ΔT2, Ta-Tb) (7/15)
(Section III)

Table A1-3-2-2 Thermal analysis results (ΔT1, ΔT2, Ta-Tb) (8/15)
(Section III)

Table A1-3-2-2 Thermal analysis results (ΔT1, ΔT2, Ta-Tb) (9/15)
(Section III)

Table A1-3-2-2 Thermal analysis results (ΔT1, ΔT2, Ta-Tb) (10/15)
(Section IV)

Table A1-3-2-2 Thermal analysis results (ΔT1, ΔT2, Ta-Tb) (11/15)
(Section IV)

Table A1-3-2-2 Thermal analysis results (ΔT1, ΔT2, Ta-Tb) (12/15)
(Section IV)

Table A1-3-2-2 Thermal analysis results (ΔT1, ΔT2, Ta-Tb) (13/15)
(Section V)

Table A1-3-2-2 Thermal analysis results (ΔT1, ΔT2, Ta-Tb) (14/15)
(Section V)

Table A1-3-2-2 Thermal analysis results (ΔT1, ΔT2, Ta-Tb) (15/15)
(Section V)

Table A1-3-2-3 Piping stress and fatigue evaluation results
(Piping that exceeds 1 inch NB–3650 evaluation)

Table A1-3-2-3 Piping stress and fatigue evaluation results
(Piping of 1 inch or less NC–3650 evaluation)

Appendix 1-4

RC04
Pressurizer Safety Valve Line

Piping Analysis Results

1. INPUT

1.1 Used for creating the pipe structural model	
1.1.1 Block division and piping specifications	Table A1-4-1-1
1.1.2 Piping isometrics	Figure A1-4-1-1
1.1.3 Concentrated mass	Table A1-4-1-2
1.1.4 Support point rigidity	Table A1-4-1-3
1.1.5 Valve rigidity	Table A1-4-1-4
1.2 Used for creating load conditions	
1.2.1 Level A/B design transient	see main text
1.2.2 Level A/B thermal displacement input data	Table A1-4-1-5
1.2.3 Level A, B temperature and pressure input data	Table A1-4-1-6
1.2.4 Level C, D maximum temperature and pressure input data	Table A1-4-1-7
1.2.5 Floor response curve	Figure A1-4-1-2
1.2.6 Seismic anchor displacement input data	Table A1-4-1-8
1.2.7 DBPB displacement input data	Table A1-4-1-9
1.2.8 Initial condition and valve open characteristics (Water hammer)	Table A1-4-1-10

2. OUTPUT

2.1 PIPESTRESS analysis model diagram	Figure A1-4-2-1
2.2 Water hammer analysis model diagram	Figure A1-4-2-2
2.3 Natural frequency analysis results	Table A1-4-2-1
2.4 Frequency mode diagram (primary to tertiary)	Figure A1-4-2-3
2.5 Thermal analysis results (ΔT1, ΔT2, Ta-Tb)	Table A1-4-2-2
2.6 Piping stress and fatigue evaluation results	Table A1-4-2-3

Table A1-4-1-1 Block division and piping specifications

Table A1-4-1-2 Concentrated mass

Table A1-4-1-3 Support point rigidity

Table A1-4-1-4 Valve rigidity

Table A1-4-1-5 Level A/B thermal displacement input data (1/1)
(Point: -)

Table A1-4-1-6 Level A, B temperature and pressure input data (1/6)
(Section I)

Table A1-4-1-6 Level A, B temperature and pressure input data (2/6)
(Section I)

Table A1-4-1-6 Level A, B temperature and pressure input data (3/6)
(Section I)

Table A1-4-1-6 Level A, B temperature and pressure input data (4/6)
(Section II)

Table A1-4-1-6 Level A, B temperature and pressure input data (5/6)
(Section II)

Table A1-4-1-6 Level A, B temperature and pressure input data (6/6)
(Section II)

Table A1-4-1-7 Level C, D maximum temperature and pressure input data

Figure A1-4-1-2 Floor response curve (1/4)
Pressurizer Safety Valve Line (RC04-07) FRS for PZR Base Plate
X-Y direction envelope (damping 3.0%)

Figure A1-4-1-2 Floor response curve (2/4)
Pressurizer Safety Valve Line (RC04-07) FRS for PZR Base Plate
Z (Vert.) direction (damping 3.0%)

Figure A1-4-1-2 Floor response curve (3/4)
Pressurizer Safety Valve Line (RC04-07) FRS for PZR Support
X-Y direction envelope (damping 3.0%)

Figure A1-4-1-2 Floor response curve (4/4)
Pressurizer Safety Valve Line (RC04-07) FRS for PZR Support
Z (Vert.) direction (damping 3.0%)

Table A1-4-1-8 Seismic anchor displacement input data

Table A1-4-1-9 DBPB displacement input data

Table A1-4-1-10 Initial condition and valve open characteristics (Water hammer)

Figure A1-4-2-1 PIPESTRESS analysis model diagram (1/2)

Figure A1-4-2-1 PIPESTRESS analysis model diagram (2/2)

Figure A1-4-2-2 Water hammer analysis model diagram
Analysis model for Pressurizer safety valve water hammer calculation

Table A1-4-2-1 Natural frequency analysis results

Figure A1-4-2-3 Frequency mode diagram (primary)

Figure A1-4-2-3 Frequency mode diagram (secondary)

Figure A1-4-2-3 Frequency mode diagram (tertiary)

Table A1-4-2-2 Thermal analysis results (ΔT1, ΔT2, Ta-Tb) (1/6)
(Section I)

Table A1-4-2-2 Thermal analysis results (ΔT1, ΔT2, Ta-Tb) (2/6)
(Section I)

Table A1-4-2-2 Thermal analysis results (ΔT1, ΔT2, Ta-Tb) (3/6)
(Section I)

Table A1-4-2-2 Thermal analysis results (ΔT1, ΔT2, Ta-Tb) (4/6)
(Section II)

Table A1-4-2-2 Thermal analysis results (ΔT1, ΔT2, Ta-Tb) (5/6)
(Section II)

Table A1-4-2-2 Thermal analysis results (ΔT1, ΔT2, Ta-Tb) (6/6)
(Section II)

Table A1-4-2-3 Piping stress and fatigue evaluation results
(Piping that exceeds 1 inch NB–3650 evaluation)

Table A1-4-2-3 Piping stress and fatigue evaluation results
(Piping of 1 inch or less NC–3650 evaluation)

Appendix 1-5

RH01
RHRS Suction Loop A Line

Piping Analysis Results

1. INPUT

1.1 Used for creating the pipe structural model	
1.1.1 Block division and piping specifications	Table A1-5-1-1
1.1.2 Piping isometrics	Figure A1-5-1-1
1.1.3 Concentrated mass	Table A1-5-1-2
1.1.4 Support point rigidity	Table A1-5-1-3
1.1.5 Valve rigidity	Table A1-5-1-4
1.2 Used for creating load conditions	
1.2.1 Level A/B design transient	see main text
1.2.2 Level A/B thermal displacement input data	Table A1-5-1-5
1.2.3 Level A, B temperature and pressure input data	Table A1-5-1-6
1.2.4 Level C, D maximum temperature and pressure input data	Table A1-5-1-7
1.2.5 Floor response curve	Figure A1-5-1-2
1.2.6 Seismic anchor displacement input data	Table A1-5-1-8
1.2.7 DBPB displacement input data	Table A1-5-1-9

2. OUTPUT

2.1 PIPESTRESS analysis model diagram	Figure A1-5-2-1
2.2 Natural frequency analysis results	Table A1-5-2-1
2.3 Frequency mode diagram (primary to tertiary)	Figure A1-5-2-2
2.4 Thermal analysis results (ΔT1, ΔT2, Ta-Tb)	Table A1-5-2-2
2.5 Piping stress and fatigue evaluation results	Table A1-5-2-3

Table A1-5-1-1 Block division and piping specifications (1/3)

Table A1-5-1-1 Block division and piping specifications (2/3)

Table A1-5-1-1 Block division and piping specifications (3/3)

Figure A1-5-1-1
Piping isometrics(1/2)

Figure A1-5-1-1
Piping isometrics(2/2)

Table A1-5-1-2 Concentrated mass

Table A1-5-1-3 Support point rigidity

Table A1-5-1-4 Valve rigidity

Table A1-5-1-5 Level A/B thermal displacement input data (1/3)
(Point: 9010)

Table A1-5-1-5 Level A/B thermal displacement input data (2/3)
(Point: 9010)

Table A1-5-1-5 Level A/B thermal displacement input data (3/3)
(Point: 9010)

Table A1-5-1-6 Level A, B temperature and pressure input data (1/33)
(Section I)

Table A1-5-1-6 Level A, B temperature and pressure input data (2/33)
(Section I)

Table A1-5-1-6 Level A, B temperature and pressure input data (3/33)
(Section I)

Table A1-5-1-6 Level A, B temperature and pressure input data (4/33)
(Section II)

Table A1-5-1-6 Level A, B temperature and pressure input data (5/33)
(Section II)

Table A1-5-1-6 Level A, B temperature and pressure input data (6/33)
(Section II)

Table A1-5-1-6 Level A, B temperature and pressure input data (7/33)
(Section III)

Table A1-5-1-6 Level A, B temperature and pressure input data (8/33)
(Section III)

Table A1-5-1-6 Level A, B temperature and pressure input data (9/33)
(Section III)

Table A1-5-1-6 Level A, B temperature and pressure input data (10/33)
(Section IV)

Table A1-5-1-6 Level A, B temperature and pressure input data (11/33)
(Section IV)

Table A1-5-1-6 Level A, B temperature and pressure input data (12/33)
(Section IV)

Table A1-5-1-6 Level A, B temperature and pressure input data (13/33)
(Section V)

Table A1-5-1-6 Level A, B temperature and pressure input data (14/33)
(Section V)

Table A1-5-1-6 Level A, B temperature and pressure input data (15/33)
(Section V)

Table A1-5-1-6 Level A, B temperature and pressure input data (16/33)
(Section VI)

Table A1-5-1-6 Level A, B temperature and pressure input data (17/33)
(Section VI)

Table A1-5-1-6 Level A, B temperature and pressure input data (18/33)
(Section VI)

Table A1-5-1-6 Level A, B temperature and pressure input data (19/33)
(Section VII)

Table A1-5-1-6 Level A, B temperature and pressure input data (20/33)
(Section VII)

Table A1-5-1-6 Level A, B temperature and pressure input data (21/33)
(Section VII)

Table A1-5-1-6 Level A, B temperature and pressure input data (22/33)
(Section VIII)

Table A1-5-1-6 Level A, B temperature and pressure input data (23/33)
(Section VIII)

Table A1-5-1-6 Level A, B temperature and pressure input data (24/33)
(Section VIII)

Table A1-5-1-6 Level A, B temperature and pressure input data (25/33)
(Section IX)

Table A1-5-1-6 Level A, B temperature and pressure input data (26/33)
(Section IX)

Table A1-5-1-6 Level A, B temperature and pressure input data (27/33)
(Section IX)

Table A1-5-1-6 Level A, B temperature and pressure input data (28/33)
(Section X)

Table A1-5-1-6 Level A, B temperature and pressure input data (29/33)
(Section X)

Table A1-5-1-6 Level A, B temperature and pressure input data (30/33)
(Section X)

Table A1-5-1-6 Level A, B temperature and pressure input data (31/33)
(Section XI)

Table A1-5-1-6 Level A, B temperature and pressure input data (32/33)
(Section XI)

Table A1-5-1-6 Level A, B temperature and pressure input data (33/33)
(Section XI)

Table A1-5-1-7 Level C, D maximum temperature and pressure input data

Figure A1-5-1-2 Floor response curve (1/6)
RHRS Suction (RH01-02) FRS for MCP Nozzle
X (EW) direction (damping 4.0%)

Figure A1-5-1-2 Floor response curve (2/6)
RHRS Suction (RH01-02) FRS for MCP Nozzle
Y (NS) direction (damping 4.0%)

Figure A1-5-1-2 Floor response curve (3/6)
RHRS Suction (RH01-02) FRS for MCP Nozzle
Z (Vert.) direction (damping 4.0%)

Figure A1-5-1-2 Floor response curve (4/6)
RHRS Suction (RH01-02) FRS for Piping
X (EW) direction (damping 4.0%)

Figure A1-5-1-2 Floor response curve (5/6)
RHRS Suction (RH01-02) FRS for Piping
Y (NS) direction (damping 4.0%)

Figure A1-5-1-2 Floor response curve (6/6)
RHRS Suction (RH01-02) FRS for Piping
Z (Vert.) direction (damping 4.0%)

Table A1-5-1-8 Seismic anchor displacement input data

Table A1-5-1-9 DBPB displacement input data

Figure A1-5-2-1 PIPESTRESS analysis model diagram

Table A1-5-2-1 Natural frequency analysis results

Figure A1-5-2-2 Frequency mode diagram (primary)

Figure A1-5-2-2 Frequency mode diagram (secondary)

Figure A1-5-2-2 Frequency mode diagram (tertiary)

Table A1-5-2-2 Thermal analysis results (ΔT1, ΔT2, Ta-Tb) (1/21)
(Section I)

Table A1-5-2-2 Thermal analysis results (ΔT1, ΔT2, Ta-Tb) (2/21)
(Section I)

Table A1-5-2-2 Thermal analysis results (ΔT1, ΔT2, Ta-Tb) (3/21)
(Section I)

Table A1-5-2-2 Thermal analysis results (ΔT1, ΔT2, Ta-Tb) (4/21)
(Section II)

Table A1-5-2-2 Thermal analysis results (ΔT1, ΔT2, Ta-Tb) (5/21)
(Section II)

Table A1-5-2-2 Thermal analysis results (ΔT1, ΔT2, Ta-Tb) (6/21)
(Section II)

Table A1-5-2-2 Thermal analysis results (ΔT1, ΔT2, Ta-Tb) (7/21)
(Section III)

Table A1-5-2-2 Thermal analysis results (ΔT1, ΔT2, Ta-Tb) (8/21)
(Section III)

Table A1-5-2-2 Thermal analysis results (ΔT1, ΔT2, Ta-Tb) (9/21)
(Section III)

Table A1-5-2-2 Thermal analysis results (ΔT1, ΔT2, Ta-Tb) (10/21)
(Section IV)

Table A1-5-2-2 Thermal analysis results (ΔT1, ΔT2, Ta-Tb) (11/21)
(Section IV)

Table A1-5-2-2 Thermal analysis results (ΔT1, ΔT2, Ta-Tb) (12/21)
(Section IV)

Table A1-5-2-2 Thermal analysis results (ΔT1, ΔT2, Ta-Tb) (13/21)
(Section V)

Table A1-5-2-2 Thermal analysis results (ΔT1, ΔT2, Ta-Tb) (14/21)
(Section V)

Table A1-5-2-2 Thermal analysis results (ΔT1, ΔT2, Ta-Tb) (15/21)
(Section V)

Table A1-5-2-2 Thermal analysis results (ΔT1, ΔT2, Ta-Tb) (16/21)
(Section VI)

Table A1-5-2-2 Thermal analysis results (ΔT1, ΔT2, Ta-Tb) (17/21)
(Section VI)

Table A1-5-2-2 Thermal analysis results (ΔT1, ΔT2, Ta-Tb) (18/21)
(Section VI)

Table A1-5-2-2 Thermal analysis results (ΔT1, ΔT2, Ta-Tb) (19/21)
(Section VII)

Table A1-5-2-2 Thermal analysis results (ΔT1, ΔT2, Ta-Tb) (20/21)
(Section VII)

Table A1-5-2-2 Thermal analysis results (ΔT1, ΔT2, Ta-Tb) (21/21)
(Section VII)

Table A1-5-2-3 Piping stress and fatigue evaluation results
(Piping that exceeds 1 inch NB-3650 evaluation)

Table A1-5-2-3 Piping stress and fatigue evaluation results
(Piping of 1 inch or less NC-3650 evaluation)

Appendix 1-6

RH02
RHRS suction Loop B Line

Piping Analysis Results

1. INPUT
1.1 Used for creating the pipe structural model
1.1.1 Block division and piping specifications Table A1-6-1-1
1.1.2 Piping isometrics Figure A1-6-1-1
1.1.3 Concentrated mass Table A1-6-1-2
1.1.4 Support point rigidity Table A1-6-1-3
1.1.5 Valve rigidity Table A1-6-1-4
1.2 Used for creating load conditions
1.2.1 Level A/B design transient see main text
1.2.2 Level A/B thermal displacement input data Table A1-6-1-5
1.2.3 Level A, B temperature and pressure input data Table A1-6-1-6
1.2.4 Level C, D maximum temperature and pressure input data Table A1-6-1-7
1.2.5 Floor response curve Figure A1-6-1-2
1.2.6 Seismic anchor displacement input data Table A1-6-1-8
1.2.7 DBPB displacement input data Table A1-6-1-9

2. OUTPUT
2.1 PIPESTRESS analysis model diagram Figure A1-6-2-1
2.2 Natural frequency analysis results Table A1-6-2-1
2.3 Frequency mode diagram (primary to tertiary) Figure A1-6-2-2
2.4 Thermal analysis results (ΔT1, ΔT2, Ta-Tb) Table A1-6-2-2
2.5 Piping stress and fatigue evaluation results Table A1-6-2-3

Table A1-6-1-1 Block division and piping specifications (1/2)

Table A1-6-1-1 Block division and piping specifications (2/2)

Figure A1-6-1-1
Piping isometrics(1/2)

Figure A1-6-1-1
Piping isometrics(2/2)

Table A1-6-1-2 Concentrated mass

Table A1-6-1-3 Support point rigidity

Table A1-6-1-4 Valve rigidity

Table A1-6-1-5 Level A/B thermal displacement input data (1/3)
(Point: 9010)

Table A1-6-1-5 Level A/B thermal displacement input data (2/3)
(Point: 9010)

Table A1-6-1-5 Level A/B thermal displacement input data (3/3)
(Point: 9010)

Table A1-6-1-6 Level A, B temperature and pressure input data (1/21)
(Section I)

Table A1-6-1-6 Level A, B temperature and pressure input data (2/21)
(Section I)

Table A1-6-1-6 Level A, B temperature and pressure input data (3/21)
(Section I)

Table A1-6-1-6 Level A, B temperature and pressure input data (4/21)
(Section II)

Table A1-6-1-6 Level A, B temperature and pressure input data (5/21)
(Section II)

Table A1-6-1-6 Level A, B temperature and pressure input data (6/21)
(Section II)

Table A1-6-1-6 Level A, B temperature and pressure input data (7/21)
(Section III)

Table A1-6-1-6 Level A, B temperature and pressure input data (8/21)
(Section III)

Table A1-6-1-6 Level A, B temperature and pressure input data (9/21)
(Section III)

Table A1-6-1-6 Level A, B temperature and pressure input data (10/21)
(Section IV)

Table A1-6-1-6 Level A, B temperature and pressure input data (11/21)
(Section IV)

Table A1-6-1-6 Level A, B temperature and pressure input data (12/21)
(Section IV)

Table A1-6-1-6 Level A, B temperature and pressure input data (13/21)
(Section V)

Table A1-6-1-6 Level A, B temperature and pressure input data (14/21)
(Section V)

Table A1-6-1-6 Level A, B temperature and pressure input data (15/21)
(Section V)

Table A1-6-1-6 Level A, B temperature and pressure input data (16/21)
(Section VI)

Table A1-6-1-6 Level A, B temperature and pressure input data (17/21)
(Section VI)

Table A1-6-1-6 Level A, B temperature and pressure input data (18/21)
(Section VI)

Table A1-6-1-6 Level A, B temperature and pressure input data (19/21)
(Section VII)

Table A1-6-1-6 Level A, B temperature and pressure input data (20/21)
(Section VII)

Table A1-6-1-6 Level A, B temperature and pressure input data (21/21)
(Section VII)

Table A1-6-1-7 Level C, D maximum temperature and pressure input data

Figure A1-6-1-2 Floor response curve (1/6)
RHRS Suction (RH01-02) FRS for MCP Nozzle
X (EW) direction (damping 4.0%)

Figure A1-6-1-2 Floor response curve (2/6)
RHRS Suction (RH01-02) FRS for MCP Nozzle
Y (NS) direction (damping 4.0%)

Figure A1-6-1-2 Floor response curve (3/6)
RHRS Suction (RH01-02) FRS for MCP Nozzle
Z (Vert.) direction (damping 4.0%)

Figure A1-6-1-2 Floor response curve (4/6)
RHRS Suction (RH01-02) FRS for Piping
X (EW) direction (damping 4.0%)

Figure A1-6-1-2 Floor response curve (5/6)
RHRS Suction (RH01-02) FRS for Piping
Y (NS) direction (damping 4.0%)

Figure A1-6-1-2 Floor response curve (6/6)
RHRS Suction (RH01-02) FRS for Piping
Z (Vert.) direction (damping 4.0%)

Table A1-6-1-8 Seismic anchor displacement input data

Table A1-6-1-9 DBPB displacement input data

Figure A1-6-2-1 PIPESTRESS analysis model diagram

Table A1-6-2-1 Natural frequency analysis results

Figure A1-6-2-2 Frequency mode diagram (primary)

Figure A1-6-2-2 Frequency mode diagram (secondary)

Figure A1-6-2-2 Frequency mode diagram (tertiary)

Table A1-6-2-2 Thermal analysis results (ΔT1, ΔT2, Ta-Tb) (1/15)
(Section I)

Table A1-6-2-2 Thermal analysis results (ΔT1, ΔT2, Ta-Tb) (2/15)
(Section I)

Table A1-6-2-2 Thermal analysis results (ΔT1, ΔT2, Ta-Tb) (3/15)
(Section I)

Table A1-6-2-2 Thermal analysis results (ΔT1, ΔT2, Ta-Tb) (4/15)
(Section II)

Table A1-6-2-2 Thermal analysis results (ΔT1, ΔT2, Ta-Tb) (5/15)
(Section II)

Table A1-6-2-2 Thermal analysis results (ΔT1, ΔT2, Ta-Tb) (6/15)
(Section II)

Table A1-6-2-2 Thermal analysis results (ΔT1, ΔT2, Ta-Tb) (7/15)
(Section III)

Table A1-6-2-2 Thermal analysis results (ΔT1, ΔT2, Ta-Tb) (8/15)
(Section III)

Table A1-6-2-2 Thermal analysis results (ΔT1, ΔT2, Ta-Tb) (9/15)
(Section III)

Table A1-6-2-2 Thermal analysis results (ΔT1, ΔT2, Ta-Tb) (10/15)
(Section IV)

Table A1-6-2-2 Thermal analysis results (ΔT1, ΔT2, Ta-Tb) (11/15)
(Section IV)

Table A1-6-2-2 Thermal analysis results (ΔT1, ΔT2, Ta-Tb) (12/15)
(Section IV)

Table A1-6-2-2 Thermal analysis results (ΔT1, ΔT2, Ta-Tb) (13/15)
(Section V)

Table A1-6-2-2 Thermal analysis results (ΔT1, ΔT2, Ta-Tb) (14/15)
(Section V)

Table A1-6-2-2 Thermal analysis results (ΔT1, ΔT2, Ta-Tb) (15/15)
(Section V)

Table A1-6-2-3 Piping stress and fatigue evaluation results
(Piping that exceeds 1 inch NB-3650 evaluation)

Table A1-6-2-3 Piping stress and fatigue evaluation results
(Piping of 1 inch or less NC-3650 evaluation)

Appendix 1-7

RH05
RHR return Loop A Line

Piping Analysis Results

1. INPUT

1.1 Used for creating the pipe structural model	
1.1.1 Block division and piping specifications	Table A1-7-1-1
1.1.2 Piping isometrics	Figure A1-7-1-1
1.1.3 Concentrated mass	Table A1-7-1-2
1.1.4 Support point rigidity	Table A1-7-1-3
1.1.5 Valve rigidity	Table A1-7-1-4
1.2 Used for creating load conditions	
1.2.1 Level A/B design transient	see main text
1.2.2 Level A/B thermal displacement input data	Table A1-7-1-5
1.2.3 Level A, B temperature and pressure input data	Table A1-7-1-6
1.2.4 Level C, D maximum temperature and pressure input data	Table A1-7-1-7
1.2.5 Floor response curve	Figure A1-7-1-2
1.2.6 Seismic anchor displacement input data	Table A1-7-1-8
1.2.7 DBPB displacement input data	Table A1-7-1-9

2. OUTPUT

2.1 PIPESTRESS analysis model diagram	Figure A1-7-2-1
2.2 Natural frequency analysis results	Table A1-7-2-1
2.3 Frequency mode diagram (primary to tertiary)	Figure A1-7-2-2
2.4 Thermal analysis results (ΔT1, ΔT2, Ta-Tb)	Table A1-7-2-2
2.5 Piping stress and fatigue evaluation results	Table A1-7-2-3

Table A1-7-1-1 Block division and piping specifications (1/2)

Table A1-7-1-1 Block division and piping specifications (2/2)

Figure A1-7-1-1 Piping isometrics(1/2)

Figure A1-7-1-1 Piping isometrics(2/2)

Table A1-7-1-2 Concentrated mass

Table A1-7-1-3 Support point rigidity (1/2)

Table A1-7-1-3 Support point rigidity (2/2)

Table A1-7-1-4 Valve rigidity

Table A1-7-1-5 Level A/B thermal displacement input data (1/3)
(Point: 9010)

Table A1-7-1-5 Level A/B thermal displacement input data (2/3)
(Point: 9010)

Table A1-7-1-5 Level A/B thermal displacement input data (3/3)
(Point: 9010)

Table A1-7-1-6 Level A, B temperature and pressure input data (1/15)
(Section I)

Table A1-7-1-6 Level A, B temperature and pressure input data (2/15)
(Section I)

Table A1-7-1-6 Level A, B temperature and pressure input data (3/15)
(Section I)

Table A1-7-1-6 Level A, B temperature and pressure input data (4/15)
(Section II)

Table A1-7-1-6 Level A, B temperature and pressure input data (5/15)
(Section II)

Table A1-7-1-6 Level A, B temperature and pressure input data (6/15)
(Section II)

Table A1-7-1-6 Level A, B temperature and pressure input data (7/15)
(Section III)

Table A1-7-1-6 Level A, B temperature and pressure input data (8/15)
(Section III)

Table A1-7-1-6 Level A, B temperature and pressure input data (9/15)
(Section III)

Table A1-7-1-6 Level A, B temperature and pressure input data (10/15)
(Section IV)

Table A1-7-1-6 Level A, B temperature and pressure input data (11/15)
(Section IV)

Table A1-7-1-6 Level A, B temperature and pressure input data (12/15)
(Section IV)

Table A1-7-1-6 Level A, B temperature and pressure input data (13/15)
(Section V)

Table A1-7-1-6 Level A, B temperature and pressure input data (14/15)
(Section V)

Table A1-7-1-6 Level A, B temperature and pressure input data (15/15)
(Section V)

Table A1-7-1-7 Level C, D maximum temperature and pressure input data

Figure A1-7-1 -2 Floor response curve (1/6)
RHRS Return (RH05-06) FRS for MCP Nozzle
X (EW) direction (damping 4.0%)

Figure A1-7-1-2 Floor response curve (2/6)
RHRS Return (RH05-06) FRS for MCP Nozzle
Y (NS) direction (damping 4.0%)

Figure A1-7-1 -2 Floor response curve (3/6)
RHRS Return (RH05-06) FRS for MCP Nozzle
Z (Vert.) direction (damping 4.0%)

Figure A1-7-1 -2 Floor response curve (4/6)
RHRS Return (RH05-06) FRS for Piping Supports
X (EW) direction (damping 4.0%)

Figure A1-7-1-2 Floor response curve (5/6)
RHRS Return (RH05-06) FRS for Piping
Y (NS) direction (damping 4.0%)

Figure A1-7-1-2 Floor response curve (6/6)
RHRS Return (RH05-06) FRS for Piping
Z (Vert.) direction (damping 4.0%)

Table A1-7-1-8 Seismic anchor displacement input data (1/2)

Table A1-7-1-8 Seismic anchor displacement input data (2/2)

Table A1-7-1-9 DBPB displacement input data

Figure A1-7-2-1 PIPESTRESS analysis model diagram

Table A1-7-2-1 Natural frequency analysis results

Figure A1-7-2-2 Frequency mode diagram (primary)

Figure A1-7-2-2 Frequency mode diagram (secondary)

Figure A1-7-2-2 Frequency mode diagram (tertiary)

Table A1-7-2-2 Thermal analysis results (ΔT1, ΔT2, Ta-Tb) (1/6)
(Section I)

Table A1-7-2-2 Thermal analysis results (ΔT1, ΔT2, Ta-Tb) (2/6)
(Section I)

Table A1-7-2-2 Thermal analysis results (ΔT1, ΔT2, Ta-Tb) (3/6)
(Section I)

Table A1-7-2-2 Thermal analysis results (ΔT1, ΔT2, Ta-Tb) (4/6)
(Section II)

Table A1-7-2-2 Thermal analysis results (ΔT1, ΔT2, Ta-Tb) (5/6)
(Section II)

Table A1-7-2-2 Thermal analysis results (ΔT1, ΔT2, Ta-Tb) (6/6)
(Section II)

Table A1-7-2-3 Piping stress and fatigue evaluation results
(Piping that exceeds 1 inch NB–3650 evaluation)

Table A1-7-2-3 Piping stress and fatigue evaluation results
(Piping of 1 inch or less NC–3650 evaluation)

Appendix 1-8

RH06
RHR return Loop B Line

Piping Analysis Results

1. INPUT

1.1 Used for creating the pipe structural model	
1.1.1 Block division and piping specifications	Table A1-8-1-1
1.1.2 Piping isometrics	Figure A1-8-1-1
1.1.3 Concentrated mass	Table A1-8-1-2
1.1.4 Support point rigidity	Table A1-8-1-3
1.1.5 Valve rigidity	Table A1-8-1-4
1.2 Used for creating load conditions	
1.2.1 Level A/B design transient	see main text
1.2.2 Level A/B thermal displacement input data	Table A1-8-1-5
1.2.3 Level A, B temperature and pressure input data	Table A1-8-1-6
1.2.4 Level C, D maximum temperature and pressure input data	Table A1-8-1-7
1.2.5 Floor response curve	Figure A1-8-1-2
1.2.6 Seismic anchor displacement input data	Table A1-8-1-8
1.2.7 DBPB displacement input data	Table A1-8-1-9

2. OUTPUT

2.1 PIPESTRESS analysis model diagram	Figure A1-8-2-1
2.2 Natural frequency analysis results	Table A1-8-2-1
2.3 Frequency mode diagram (primary to tertiary)	Figure A1-8-2-2
2.4 Thermal analysis results (ΔT1, ΔT2, Ta-Tb)	Table A1-8-2-2
2.5 Piping stress and fatigue evaluation results	Table A1-8-2-3

Table A1-8-1-1 Block division and piping specifications (1/2)*

Table A1-8-1-1 Block division and piping specifications (2/2)

Figure A1-8-1-1 Piping isometrics(1/2)

Figure A1-8-1-1 Piping isometrics(2/2)

Table A1-8-1-2 Concentrated mass

Table A1-8-1-3 Support point rigidity (1/2)

Table A1-8-1-3 Support point rigidity (2/2)

Table A1-8-1-4 Valve rigidity

Table A1-8-1-5 Level A/B thermal displacement input data (1/3)
(Point: 9010)

Table A1-8-1-5 Level A/B thermal displacement input data (2/3)
(Point: 9010)

Table A1-8-1-5 Level A/B thermal displacement input data (3/3)
(Point: 9010)

Table A1-8-1-6 Level A, B temperature and pressure input data (1/15)
(Section I)

Table A1-8-1-6 Level A, B temperature and pressure input data (2/15)
(Section I)

Table A1-8-1-6 Level A, B temperature and pressure input data (3/15)
(Section I)

Table A1-8-1-6 Level A, B temperature and pressure input data (4/15)
(Section II)

Table A1-8-1-6 Level A, B temperature and pressure input data (5/15)
(Section II)

Table A1-8-1-6 Level A, B temperature and pressure input data (6/15)
(Section II)

Table A1-8-1-6 Level A, B temperature and pressure input data (7/15)
(Section III)

Table A1-8-1-6 Level A, B temperature and pressure input data (8/15)
(Section III)

Table A1-8-1-6 Level A, B temperature and pressure input data (9/15)
(Section III)

Table A1-8-1-6 Level A, B temperature and pressure input data (10/15)
(Section IV)

Table A1-8-1-6 Level A, B temperature and pressure input data (11/15)
(Section IV)

Table A1-8-1-6 Level A, B temperature and pressure input data (12/15)
(Section IV)

Table A1-8-1-6 Level A, B temperature and pressure input data (13/15)
(Section V)

Table A1-8-1-6 Level A, B temperature and pressure input data (14/15)
(Section V)

Table A1-8-1-6 Level A, B temperature and pressure input data (15/15)
(Section V)

Table A1-8-1-7 Level C, D maximum temperature and pressure input data

Figure A1-8-1 -2 Floor response curve (1/6)
RHRS Return (RH05-06) FRS for MCP Nozzle
X (EW) direction (damping 4.0%)

Figure A1-8-1-2 Floor response curve (2/6)
RHRS Return (RH05-06) FRS for MCP Nozzle
Y (NS) direction (damping 4.0%)

Figure A1-8-1 -2 Floor response curve (3/6)
RHRS Return (RH05-06) FRS for MCP Nozzle
Z (Vert.) direction (damping 4.0%)

Figure A1-8-1 -2 Floor response curve (4/6)
RHRS Return (RH05-06) FRS for Piping Supports
X (EW) direction (damping 4.0%)

Figure A1-8-1-2 Floor response curve (5/6)
RHRS Return (RH05-06) FRS for Piping
Y (NS) direction (damping 4.0%)

Figure A1-8-1-2 Floor response curve (6/6)
RHRS Return (RH05-06) FRS for Piping
Z (Vert.) direction (damping 4.0%)

Table A1-8-1-8 Seismic anchor displacement input data (1/2)

Table A1-8-1-8 Seismic anchor displacement input data (2/2)

Table A1-8-1-9 DBPB displacement input data

Figure A1-8-2-1 PIPESTRESS analysis model diagram

Table A1-8-2-1 Natural frequency analysis results

Figure A1-8-2-2 Frequency mode diagram (primary)

Figure A1-8-2-2 Frequency mode diagram (secondary)

Figure A1-8-2-2 Frequency mode diagram (tertiary)

Table A1-8-2-2 Thermal analysis results (ΔT1, ΔT2, Ta-Tb) (1/6)
(Section I)

Table A1-8-2-2 Thermal analysis results (ΔT1, ΔT2, Ta-Tb) (2/6)
(Section I)

Table A1-8-2-2 Thermal analysis results (ΔT1, ΔT2, Ta-Tb) (3/6)
(Section I)

Table A1-8-2-2 Thermal analysis results (ΔT1, ΔT2, Ta-Tb) (4/6)
(Section II)

Table A1-8-2-2 Thermal analysis results (ΔT1, ΔT2, Ta-Tb) (5/6)
(Section II)

Table A1-8-2-2 Thermal analysis results (ΔT1, ΔT2, Ta-Tb) (6/6)
(Section II)

Table A1-8-2-3 Piping stress and fatigue evaluation results
(Piping that exceeds 1 inch NB–3650 evaluation)

Table A1-8-2-3 Piping stress and fatigue evaluation results
(Piping of 1 inch or less NC–3650 evaluation)

Appendix 1-9

SI01
Accumulator Loop A Line

Piping Analysis Results

1. INPUT

1.1 Used for creating the pipe structural model	
1.1.1 Block division and piping specifications	Table A1-9-1-1
1.1.2 Piping isometrics	Figure A1-9-1-1
1.1.3 Concentrated mass	Table A1-9-1-2
1.1.4 Support point rigidity	Table A1-9-1-3
1.1.5 Valve rigidity	Table A1-9-1-4
1.2 Used for creating load conditions	
1.2.1 Level A/B design transient	see main text
1.2.2 Level A/B thermal displacement input data	Table A1-9-1-5
1.2.3 Level A, B temperature and pressure input data	Table A1-9-1-6
1.2.4 Level C, D maximum temperature and pressure input data	Table A1-9-1-7
1.2.5 Floor response curve	Figure A1-9-1-2
1.2.6 Seismic anchor displacement input data	Table A1-9-1-8
1.2.7 DBPB displacement input data	Table A1-9-1-9

2. OUTPUT

2.1 PIPESTRESS analysis model diagram	Figure A1-9-2-1
2.2 Natural frequency analysis results	Table A1-9-2-1
2.3 Frequency mode diagram (primary to tertiary)	Figure A1-9-2-2
2.4 Thermal analysis results (ΔT1, ΔT2, Ta-Tb)	Table A1-9-2-2
2.5 Piping stress and fatigue evaluation results	Table A1-9-2-3
2.6 LBB evaluation results	Figure A1-9-2-3

Table A1-9-1-1 Block division and piping specifications)

Figure A1-9-1-1 Piping isometric

Table A1-9-1-2 Concentrated mass

Table A1-9-1-3 Support point rigidity

Table A1-9-1-4 Valve rigidity

Table A1-9-1-5 Level A/B thermal displacement input data (1/3)
(Point: 9010)

Table A1-9-1-5 Level A/B thermal displacement input data (2/3)
(Point: 9010)

Table A1-9-1-5 Level A/B thermal displacement input data (3/3)
(Point: 9010)

Table A1-9-1-6 Level A, B temperature and pressure input data (1/12)
(Section I)

Table A1-9-1-6 Level A, B temperature and pressure input data (2/12)
(Section I)

Table A1-9-1-6 Level A, B temperature and pressure input data (3/12)
(Section I)

Table A1-9-1-6 Level A, B temperature and pressure input data (4/12)
(Section II)

Table A1-9-1-6 Level A, B temperature and pressure input data (5/12)
(Section II)

Table A1-9-1-6 Level A, B temperature and pressure input data (6/12)
(Section II)

Table A1-9-1-6 Level A, B temperature and pressure input data (7/12)
(Section III)

Table A1-9-1-6 Level A, B temperature and pressure input data (8/12)
(Section III)

Table A1-9-1-6 Level A, B temperature and pressure input data (9/12)
(Section III)

Table A1-9-1-6 Level A, B temperature and pressure input data (10/12)
(Section IV)

Table A1-9-1-6 Level A, B temperature and pressure input data (11/12)
(Section IV)

Table A1-9-1-6 Level A, B temperature and pressure input data (12/12)
(Section IV)

Table A1-9-1-7 Level C, D maximum temperature and pressure input data

Figure A1-9-1 -2 Floor response curve (1/6)
Accumulator (SI01-02) FRS for MCP Nozzle
X (EW) direction (damping 4.0%)

Figure A1-9-1-2 Floor response curve (2/6)
Accumulator (SI01-02) FRS for MCP Nozzle
Y (NS) direction (damping 4.0%)

Figure A1-9-1 -2 Floor response curve (3/6)
Accumulator (SI01-02) FRS for MCP Nozzle
Z (Vert.) direction (damping 4.0%)

Figure A1-9-1 -2 Floor response curve (4/6)
Accumulator (SI01-02) FRS for Piping
X (EW) direction (damping 4.0%)

Figure A1-9-1-2 Floor response curve (5/6)
Accumulator (SI01-02) FRS for Piping
Y (NS) direction (damping 4.0%)

Figure A1-9-1-2 Floor response curve (6/6)
Accumulator (SI01-02) FRS for Piping
Z (Vert.) direction (damping 4.0%)

Table A1-9-1-8 Seismic anchor displacement input data

Table A1-9-1-9 DBPB displacement input data

Figure A1-9-2-1 PIPESTRESS analysis model diagram

Table A1-9-2-1 Natural frequency analysis results

Figure A1-9-2-2 Frequency mode diagram (primary)

Figure A1-9-2-2 Frequency mode diagram (secondary)

Figure A1-9-2-2 Frequency mode diagram (tertiary)

Table A1-9-2-2 Thermal analysis results (ΔT1, ΔT2, Ta-Tb) (1/6)
(Section I)

Table A1-9-2-2 Thermal analysis results (ΔT1, ΔT2, Ta-Tb) (2/6)
(Section I)

Table A1-9-2-2 Thermal analysis results (ΔT1, ΔT2, Ta-Tb) (3/6)
(Section I)

Table A1-9-2-2 Thermal analysis results (ΔT1, ΔT2, Ta-Tb) (4/6)
(Section II)

Table A1-9-2-2 Thermal analysis results (ΔT1, ΔT2, Ta-Tb) (5/6)
(Section II)

Table A1-9-2-2 Thermal analysis results (ΔT1, ΔT2, Ta-Tb) (6/6)
(Section II)

Table A1-9-2-3 Piping stress and fatigue evaluation results
(Piping that exceeds 1 inch NB–3650 evaluation)
*1 Evaluation performed for when the primary + secondary stress exceeds 3Sm.

Table A1-9-2-3 Piping stress and fatigue evaluation results
(Piping of 1 inch or less NC–3650 evaluation)

Figure A1-9-2-3 LBB evaluation results

Appendix 1-10

SI02
Accumulator Loop B Line

Piping Analysis Results

1. INPUT

1.1 Used for creating the pipe structural model	
1.1.1 Block division and piping specifications	Table A1-10-1-1
1.1.2 Piping isometrics	Figure A1-10-1-1
1.1.3 Concentrated mass	Table A1-10-1-2
1.1.4 Support point rigidity	Table A1-10-1-3
1.1.5 Valve rigidity	Table A1-10-1-4
1.2 Used for creating load conditions	
1.2.1 Level A/B design transient	see main text
1.2.2 Level A/B thermal displacement input data	Table A1-10-1-5
1.2.3 Level A, B temperature and pressure input data	Table A1-10-1-6
1.2.4 Level C, D maximum temperature and pressure input data	Table A1-10-1-7
1.2.5 Floor response curve	Figure A1-10-1-2
1.2.6 Seismic anchor displacement input data	Table A1-10-1-8
1.2.7 DBPB displacement input data	Table A1-10-1-9

2. OUTPUT

2.1 PIPESTRESS analysis model diagram	Figure A1-10-2-1
2.2 Natural frequency analysis results	Table A1-10-2-1
2.3 Frequency mode diagram (primary to tertiary)	Figure A1-10-2-2
2.4 Thermal analysis results (ΔT1, ΔT2, Ta-Tb)	Table A1-10-2-2
2.5 Piping stress and fatigue evaluation results	Table A1-10-2-3
2.6 LBB evaluation results	Figure A1-10-2-3

Table A1-10-1-1 Block division and piping specifications

Figure A1-10-1-1 Piping isometric

Table A1-10-1-2 Concentrated mass

Table A1-10-1-3 Support point rigidity

Table A1-10-1-4 Valve rigidity

Table A1-10-1-5 Level A/B thermal displacement input data (1/3)
(Point: 9010)

Table A1-10-1-5 Level A/B thermal displacement input data (2/3)
(Point: 9010)

Table A1-10-1-5 Level A/B thermal displacement input data (3/3)
(Point: 9010)

Table A1-10-1-6 Level A, B temperature and pressure input data (1/12)
(Section I)

Table A1-10-1-6 Level A, B temperature and pressure input data (2/12)
(Section I)

Table A1-10-1-6 Level A, B temperature and pressure input data (3/12)
(Section I)

Table A1-10-1-6 Level A, B temperature and pressure input data (4/12)
(Section II)

Table A1-10-1-6 Level A, B temperature and pressure input data (5/12)
(Section II)

Table A1-10-1-6 Level A, B temperature and pressure input data (6/12)
(Section II)

Table A1-10-1-6 Level A, B temperature and pressure input data (7/12)
(Section III)

Table A1-10-1-6 Level A, B temperature and pressure input data (8/12)
(Section III)

Table A1-10-1-6 Level A, B temperature and pressure input data (9/12)
(Section III)

Table A1-10-1-6 Level A, B temperature and pressure input data (10/12)
(Section IV)

Table A1-10-1-6 Level A, B temperature and pressure input data (11/12)
(Section IV)

Table A1-10-1-6 Level A, B temperature and pressure input data (12/12)
(Section IV)

Table A1-10-1-7 Level C, D maximum temperature and pressure input data

Figure A1-10-1-2 Floor response curve (1/6)
Accumulator (SI01-02) FRS for MCP Nozzle
X (EW) direction (damping 4.0%)

Figure A1-10-1-2 Floor response curve (2/6)
Accumulator (SI01-02) FRS for MCP Nozzle
Y (NS) direction (damping 4.0%)

Figure A1-10-1-2 Floor response curve (3/6)
Accumulator (SI01-02) FRS for MCP Nozzle
Z (Vert.) direction (damping 4.0%)

Figure A1-10-1-2 Floor response curve (4/6)
Accumulator (SI01-02) FRS for Piping
X (EW) direction (damping 4.0%)

Figure A1-10-1-2 Floor response curve (5/6)
Accumulator (SI01-02) FRS for Piping
Y (NS) direction (damping 4.0%)

Figure A1-10-1-2 Floor response curve (6/6)
Accumulator (SI01-02) FRS for Piping
Z (Vert.) direction (damping 4.0%)

Table A1-10-1-8 Seismic anchor displacement input data

Table A1-10-1-9 DBPB displacement input data

Figure A1-10-2-1 PIPESTRESS analysis model diagram

Table A1-10-2-1 Natural frequency analysis results

Figure A1-10-2-2 Frequency mode diagram (primary)

Figure A1-10-2-2 Frequency mode diagram (secondary)

Figure A1-10-2-2 Frequency mode diagram (tertiary)

Table A1-10-2-2 Thermal analysis results (ΔT1, ΔT2, Ta-Tb) (1/6)
(Section I)

Table A1-10-2-2 Thermal analysis results (ΔT1, ΔT2, Ta-Tb) (2/6)
(Section I)

Table A1-10-2-2 Thermal analysis results (ΔT1, ΔT2, Ta-Tb) (3/6)
(Section I)

Table A1-10-2-2 Thermal analysis results (ΔT1, ΔT2, Ta-Tb) (4/6)
(Section II)

Table A1-10-2-2 Thermal analysis results (ΔT1, ΔT2, Ta-Tb) (5/6)
(Section II)

Table A1-10-2-2 Thermal analysis results (ΔT1, ΔT2, Ta-Tb) (6/6)
(Section II)

Table A1-10-2–3 Piping stress and Fatigue evaluation results
(Piping that exceeds 1 inch NB–3650 evaluation)

Table A1-10-2–3 Piping stress and Fatigue evaluation results
(Piping of 1 inch or less NC–3650 evaluation)

Figure A1-10-2-3 LBB evaluation results

Appendix 1-11

SI05
DVI A Line

Piping Analysis Results

1. INPUT

1.1 Used for creating the pipe structural model	
1.1.1 Block division and piping specifications	Table A1-11-1-1
1.1.2 Piping isometrics	Figure A1-11-1-1
1.1.3 Concentrated mass	Table A1-11-1-2
1.1.4 Support point rigidity	Table A1-11-1-3
1.1.5 Valve rigidity	Table A1-11-1-4
1.2 Used for creating load conditions	
1.2.1 Level A/B design transient	see main text
1.2.2 Level A/B thermal displacement input data	Table A1-11-1-5
1.2.3 Level A, B temperature and pressure input data	Table A1-11-1-6
1.2.4 Level C, D maximum temperature and pressure input data	Table A1-11-1-7
1.2.5 Floor response curve	Figure A1-11-1-2
1.2.6 Seismic anchor displacement input data	Table A1-11-1-8
1.2.7 DBPB displacement input data	Table A1-11-1-9

2. OUTPUT

2.1 PIPESTRESS analysis model diagram	Figure A1-11-2-1
2.2 Natural frequency analysis results	Table A1-11-2-1
2.3 Frequency mode diagram (primary to tertiary)	Figure A1-11-2-2
2.4 Thermal analysis results (ΔT1, ΔT2, Ta-Tb)	Table A1-11-2-2
2.5 Piping stress and fatigue evaluation results	Table A1-11-2-3

Table A1-11-1-1 Block division and piping specifications

US-APWR SI05
DVI A Line
Figure A1-11-1-1 Piping isometrics

Table A1-11-1-2 Concentrated mass

Table A1-11-1-3 Support point rigidity

Table A1-11-1-4 Valve rigidity

Table A1-11-1-5 Level A/B thermal displacement input data (1/3)
(Point: 9100)

Table A1-11-1-5 Level A/B thermal displacement input data (2/3)
(Point: 9100)

Table A1-11-1-5 Level A/B thermal displacement input data (3/3)
(Point: 9100)

Table A1-11-1-6 Level A, B temperature and pressure input data (1/9)
(Section I)

Table A1-11-1-6 Level A, B temperature and pressure input data (2/9)
(Section I)

Table A1-11-1-6 Level A, B temperature and pressure input data (3/9)
(Section I)

Table A1-11-1-6 Level A, B temperature and pressure input data (4/9)
(Section II)

Table A1-11-1-6 Level A, B temperature and pressure input data (5/9)
(Section II)

Table A1-11-1-6 Level A, B temperature and pressure input data (6/9)
(Section II)

Table A1-11-1-6 Level A, B temperature and pressure input data (7/9)
(Section III)

Table A1-11-1-6 Level A, B temperature and pressure input data (8/9)
(Section III)

Table A1-11-1-6 Level A, B temperature and pressure input data (9/9)
(Section III)

Table A1-11-1-7 Level C, D maximum temperature and pressure input data

Figure A1-11-1-2 Floor response curve (1/6)
DVI (SI05-06) FRS for RV Nozzle
X (EW) direction (damping 4.0%)

Figure A1-11-1-2 Floor response curve (2/6)
DVI (SI05-06) FRS for RV Nozzle
Y (NS) direction (damping 4.0%)

Figure A1-11-1-2 Floor response curve (3/6)
DVI (SI05-06) FRS for RV Nozzle
Z (Vert.) direction (damping 4.0%)

Figure A1-11-1-2 Floor response curve (4/6)
DVI (SI05-06) FRS for Piping
X (EW) direction (damping 4.0%)

Figure A1-11-1-2 Floor response curve (5/6)
DVI (SI05-06) FRS for Piping
Y (NS) direction (damping 4.0%)

Figure A1-11-1-2 Floor response curve (6/6)
DVI (SI05-06) FRS for Piping
Z (Vert.) direction (damping 4.0%)

Table A1-11-1-8 Seismic anchor displacement input data

Table A1-11-1-9 DBPB displacement input data

Figure A1-11-2-1 PIPESTRESS analysis model diagram

Table A1-11-2-1 Natural frequency analysis results

Figure A1-11-2-2 Frequency mode diagram (primary)

Figure A1-11-2-2 Frequency mode diagram (secondary)

Figure A1-11-2-2 Frequency mode diagram (tertiary)

Table A1-11-2-2 Thermal analysis results (ΔT1, ΔT2, Ta-Tb) (1/6)
(Section I)

Table A1-11-2-2 Thermal analysis results (ΔT1, ΔT2, Ta-Tb) (2/6)
(Section I)

Table A1-11-2-2 Thermal analysis results (ΔT1, ΔT2, Ta-Tb) (3/6)
(Section I)

Table A1-11-2-2 Thermal analysis results (ΔT1, ΔT2, Ta-Tb) (4/6)
(Section II)

Table A1-11-2-2 Thermal analysis results (ΔT1, ΔT2, Ta-Tb) (5/6)
(Section II)

Table A1-11-2-2 Thermal analysis results (ΔT1, ΔT2, Ta-Tb) (6/6)
(Section II)

Table A1-11-2-3 Piping stress and fatigue evaluation results
(Piping that exceeds 1 inch NB–3650 evaluation)

Table A1-11-2-3 Piping stress and fatigue evaluation results
(Piping of 1 inch or less NC–3650 evaluation)

Appendix 1-12

SI06
DVI B Line

Piping Analysis Results

1. INPUT

1.1 Used for creating the pipe structural model	
1.1.1 Block division and piping specifications	Table A1-12-1-1
1.1.2 Piping isometrics	Figure A1-12-1-1
1.1.3 Concentrated mass	Table A1-12-1-2
1.1.4 Support point rigidity	Table A1-12-1-3
1.1.5 Valve rigidity	Table A1-12-1-4
1.2 Used for creating load conditions	
1.2.1 Level A/B design transient	see main text
1.2.2 Level A/B thermal displacement input data	Table A1-12-1-5
1.2.3 Level A, B temperature and pressure input data	Table A1-12-1-6
1.2.4 Level C, D maximum temperature and pressure input data	Table A1-12-1-7
1.2.5 Floor response curve	Figure A1-12-1-2
1.2.6 Seismic anchor displacement input data	Table A1-12-1-8
1.2.7 DBPB displacement input data	Table A1-12-1-9

2. OUTPUT

2.1 PIPESTRESS analysis model diagram	Figure A1-12-2-1
2.2 Natural frequency analysis results	Table A1-12-2-1
2.3 Frequency mode diagram (primary to tertiary)	Figure A1-12-2-2
2.4 Thermal analysis results (ΔT1, ΔT2, Ta-Tb)	Table A1-12-2-2
2.5 Piping stress and fatigue evaluation results	Table A1-12-2-3

Table A1-12-1-1 Block division and piping specifications

US-APWR SI06
DVI B Line
Figure A1-12-1-1 Piping Isometrics

Table A1-12-1-2 Concentrated mass

Table A1-12-1-3 Support point rigidity

Table A1-12-1-4 Valve rigidity

Table A1-12-1-5 Level A/B thermal displacement input data (1/3)
(Point: 9100)

Table A1-12-1-5 Level A/B thermal displacement input data (2/3)
(Point: 9100)

Table A1-12-1-5 Level A/B thermal displacement input data (3/3)
(Point: 9100)

Table A1-12-1-6 Level A, B temperature and pressure input data (1/9)
(Section I)

Table A1-12-1-6 Level A, B temperature and pressure input data (2/9)
(Section I)

Table A1-12-1-6 Level A, B temperature and pressure input data (3/9)
(Section I)

Table A1-12-1-6 Level A, B temperature and pressure input data (4/9)
(Section II)

Table A1-12-1-6 Level A, B temperature and pressure input data (5/9)
(Section II)

Table A1-12-1-6 Level A, B temperature and pressure input data (6/9)
(Section II)

Table A1-12-1-6 Level A, B temperature and pressure input data (7/9)
(Section III)

Table A1-12-1-6 Level A, B temperature and pressure input data (8/9)
(Section III)

Table A1-12-1-6 Level A, B temperature and pressure input data (9/9)
(Section III)

Table A1-12-1-7 Level C, D maximum temperature and pressure input data

Figure A1-12-1-2 Floor response curve (1/6)
DVI (SI05-06) FRS for RV Nozzle
X (EW) direction (damping 4.0%)

Figure A1-12-1-2 Floor response curve (2/6)
DVI (SI05-06) FRS for RV Nozzle
Y (NS) direction (damping 4.0%)

Figure A1-12-1-2 Floor response curve (3/6)
DVI (SI05-06) FRS for RV Nozzle
Z (Vert.) direction (damping 4.0%)

Figure A1-12-1-2 Floor response curve (4/6)
DVI (SI05-06) FRS for Piping
X (EW) direction (damping 4.0%)

Figure A1-12-1-2 Floor response curve (5/6)
DVI (SI05-06) FRS for Piping
Y (NS) direction (damping 4.0%)

Figure A1-12-1-2 Floor response curve (6/6)
DVI (SI05-06) FRS for Piping
Z (Vert.) direction (damping 4.0%)

Table A1-12-1-8 Seismic anchor displacement input data

Table A1-12-1-9 DBPB displacement input data

Figure A1-12-2-1 PIPESTRESS analysis model diagram

Table A1-12-2-1 Natural frequency analysis results

Figure A1-12-2-2 Frequency mode diagram (primary)

Figure A1-12-2-2 Frequency mode diagram (secondary)

Figure A1-12-2-2 Frequency mode diagram (tertiary)

Table A1-12-2-2 Thermal analysis results (ΔT1, ΔT2, Ta-Tb) (1/6)
(Section I)

Table A1-12-2-2 Thermal analysis results (ΔT1, ΔT2, Ta-Tb) (2/6)
(Section I)

Table A1-12-2-2 Thermal analysis results (ΔT1, ΔT2, Ta-Tb) (3/6)
(Section I)

Table A1-12-2-2 Thermal analysis results (ΔT1, ΔT2, Ta-Tb) (4/6)
(Section II)

Table A1-12-2-2 Thermal analysis results (ΔT1, ΔT2, Ta-Tb) (5/6)
(Section II)

Table A1-12-2-2 Thermal analysis results (ΔT1, ΔT2, Ta-Tb) (6/6)
(Section II)

Table A1-12-2-3 Piping stress and fatigue evaluation results
(Piping that exceeds 1 inch NB–3650 evaluation)

Table A1-12-2-3 Piping stress and fatigue evaluation results
(Piping of 1 inch or less NC–3650 evaluation)

Appendix 1-13

CS01
CVCS Charging Line

Piping Analysis Results

1. INPUT
1.1 Used for creating the pipe structural model
1.1.1 Block division and piping specifications Table A1-13-1-1
1.1.2 Piping isometrics Figure A1-13-1-1
1.1.3 Concentrated mass Table A1-13-1-2
1.1.4 Support point rigidity Table A1-13-1-3
1.1.5 Valve rigidity Table A1-13-1-4
1.2 Used for creating load conditions
1.2.1 Level A/B design transient see main text
1.2.2 Level A/B thermal displacement input data Table A1-13-1-5
1.2.3 Level A, B temperature and pressure input data Table A1-13-1-6
1.2.4 Level C, D maximum temperature and pressure input data Table A1-13-1-7
1.2.5 Floor response curve Figure A1-13-1-2
1.2.6 Seismic anchor displacement input data Table A1-13-1-8
1.2.7 DBPB displacement input data Table A1-13-1-9

2. OUTPUT
2.1 PIPESTRESS analysis model diagram Figure A1-13-2-1
2.2 Natural frequency analysis results Table A1-13-2-1
2.3 Frequency mode diagram (primary to tertiary) Figure A1-13-2-2
2.4 Thermal analysis results (ΔT1, ΔT2, Ta-Tb) Table A1-13-2-2
2.5 Piping stress and fatigue evaluation results Table A1-13-2-3

Table A1-13-1-1 Block division and piping specifications

Figure A1-13-1-1 Piping isometric

Table A1-13-1-2 Concentrated mass

Table A1-13-1-3 Support point rigidity

Table A1-13-1-4 Valve rigidity

Table A1-13-1-5 Level A/B thermal displacement input data (1/3)
(Point: 9010)

Table A1-13-1-5 Level A/B thermal displacement input data (2/3)
(Point: 9010)

Table A1-13-1-5 Level A/B thermal displacement input data (3/3)
(Point: 9010)

Table A1-13-1-6 Level A, B temperature and pressure input data (1/12)
(Section I)

Table A1-13-1-6 Level A, B temperature and pressure input data (2/12)
(Section I)

Table A1-13-1-6 Level A, B temperature and pressure input data (3/12)
(Section I)

Table A1-13-1-6 Level A, B temperature and pressure input data (4/12)
(Section II)

Table A1-13-1-6 Level A, B temperature and pressure input data (5/12)
(Section II)

Table A1-13-1-6 Level A, B temperature and pressure input data (6/12)
(Section II)

Table A1-13-1-6 Level A, B temperature and pressure input data (7/12)
(Section III)

Table A1-13-1-6 Level A, B temperature and pressure input data (8/12)
(Section III)

Table A1-13-1-6 Level A, B temperature and pressure input data (9/12)
(Section III)

Table A1-13-1-6 Level A, B temperature and pressure input data (10/12)
(Section IV)

Table A1-13-1-6 Level A, B temperature and pressure input data (11/12)
(Section IV)

Table A1-13-1-6 Level A, B temperature and pressure input data (12/12)
(Section IV)

Table A1-13-1-7 Level C, D maximum temperature and pressure input data

Figure A1-13-1-2 Floor response curve (1/6)
CVCS Charging (CS01) FRS for MCP Nozzle
X (EW) direction (damping 4.0%)

Figure A1-13-1-2 Floor response curve (2/6)
CVCS Charging (CS01) FRS for MCP Nozzle
Y (NS) direction (damping 4.0%)

Figure A1-13-1-2 Floor response curve (3/6)
CVCS Charging (CS01) FRS for MCP Nozzle
Z (Vert.) direction (damping 4.0%)

Figure A1-13-1-2 Floor response curve (4/6)
CVCS Charging (CS01) FRS for Piping
X (EW) direction (damping 4.0%)

Figure A1-13-1-2 Floor response curve (5/6)
CVCS Charging (CS01) FRS for Piping
Y (NS) direction (damping 4.0%)

Figure A1-13-1-2 Floor response curve (6/6)
CVCS Charging (CS01) FRS for Piping
Z (Vert.) direction (damping 4.0%)

Table A1-13-1-8 Seismic anchor displacement input data

Table A1-13-1-9 DBPB displacement input data

Figure A1-13-2-1 PIPESTRESS analysis model diagram

Table A1-13-2-1 Natural frequency analysis results

Figure A1-13-2-2 Frequency mode diagram (primary)

Figure A1-13-2-2 Frequency mode diagram (secondary)

Figure A1-13-2-2 Frequency mode diagram (tertiary)

Table A1-13-2-2 Thermal analysis results (ΔT1, ΔT2, Ta-Tb) (1/9)
(Section I)

Table A1-13-2-2 Thermal analysis results (ΔT1, ΔT2, Ta-Tb) (2/9)
(Section I)

Table A1-13-2-2 Thermal analysis results (ΔT1, ΔT2, Ta-Tb) (3/9)
(Section I)

Table A1-13-2-2 Thermal analysis results (ΔT1, ΔT2, Ta-Tb) (4/9)
(Section II)

Table A1-13-2-2 Thermal analysis results (ΔT1, ΔT2, Ta-Tb) (5/9)
(Section II)

Table A1-13-2-2 Thermal analysis results (ΔT1, ΔT2, Ta-Tb) (6/9)
(Section II)

Table A1-13-2-2 Thermal analysis results (ΔT1, ΔT2, Ta-Tb) (7/9)
(Section III)

Table A1-13-2-2 Thermal analysis results (ΔT1, ΔT2, Ta-Tb) (8/9)
(Section III)

Table A1-13-2-2 Thermal analysis results (ΔT1, ΔT2, Ta-Tb) (9/9)
(Section III)

Table A1-13-2-3 Piping stress and fatigue evaluation results
(Piping that exceeds 1 inch NB–3650 evaluation)

Table A1-13-2-3 Piping stress and fatigue evaluation results
(Piping of 1 inch or less NC–3650 evaluation)

Appendix 1-14

CS02
CVCS Letdown Line

Piping Analysis Results

1. INPUT

1.1 Used for creating the pipe structural model	
1.1.1 Block division and piping specifications	Table A1-14-1-1
1.1.2 Piping isometrics	Figure A1-14-1-1
1.1.3 Concentrated mass	Table A1-14-1-2
1.1.4 Support point rigidity	Table A1-14-1-3
1.1.5 Valve rigidity	Table A1-14-1-4
1.2 Used for creating load conditions	
1.2.1 Level A/B design transient	see main text
1.2.2 Level A/B thermal displacement input data	Table A1-14-1-5
1.2.3 Level A, B temperature and pressure input data	Table A1-14-1-6
1.2.4 Level C, D maximum temperature and pressure input data	Table A1-14-1-7
1.2.5 Floor response curve	Figure A1-14-1-2
1.2.6 Seismic anchor displacement input data	Table A1-14-1-8
1.2.7 DBPB displacement input data	Table A1-14-1-9

2. OUTPUT

2.1 PIPESTRESS analysis model diagram	Figure A1-14-2-1
2.2 Natural frequency analysis results	Table A1-14-2-1
2.3 Frequency mode diagram (primary to tertiary)	Figure A1-14-2-2
2.4 Thermal analysis results (ΔT1, ΔT2, Ta-Tb)	Table A1-14-2-2
2.5 Piping stress and fatigue evaluation results	Table A1-14-2-3

Table A1-14-1-1 Block division and piping specifications (1/2)

Table A1-14-1-1 Block division and piping specifications (2/2)

Figure A1-14-1-1 Piping isometrics(1/3)

Figure A1-14-1-1 Piping isometrics(2/3)

Figure A1-14-1-1 Piping isometrics(3/3)

Table A1-14-1-2 Concentrated mass

Table A1-14-1-3 Support point rigidity

Table A1-14-1-4 Valve rigidity

Table A1-14-1-5 Level A/B thermal displacement input data (1/3)
(Point: 9010)

Table A1-14-1-5 Level A/B thermal displacement input data (2/3)
(Point: 9010)

Table A1-14-1-5 Level A/B thermal displacement input data (3/3)
(Point: 9010)

Table A1-14-1-6 Level A, B temperature and pressure input data (1/27)
(Section I)

Table A1-14-1-6 Level A, B temperature and pressure input data (2/27)
(Section I)

Table A1-14-1-6 Level A, B temperature and pressure input data (3/27)
(Section I)

Table A1-14-1-6 Level A, B temperature and pressure input data (4/27)
(Section II)

Table A1-14-1-6 Level A, B temperature and pressure input data (5/27)
(Section II)

Table A1-14-1-6 Level A, B temperature and pressure input data (6/27)
(Section II)

Table A1-14-1-6 Level A, B temperature and pressure input data (7/27)
(Section III)

Table A1-14-1-6 Level A, B temperature and pressure input data (8/27)
(Section III)

Table A1-14-1-6 Level A, B temperature and pressure input data (9/27)
(Section III)

Table A1-14-1-6 Level A, B temperature and pressure input data (10/27)
(Section IV)

Table A1-14-1-6 Level A, B temperature and pressure input data (11/27)
(Section IV)

Table A1-14-1-6 Level A, B temperature and pressure input data (12/27)
(Section IV)

Table A1-14-1-6 Level A, B temperature and pressure input data (13/27)
(Section V)

Table A1-14-1-6 Level A, B temperature and pressure input data (14/27)
(Section V)

Table A1-14-1-6 Level A, B temperature and pressure input data (15/27)
(Section V)

Table A1-14-1-6 Level A, B temperature and pressure input data (16/27)
(Section VI)

Table A1-14-1-6 Level A, B temperature and pressure input data (17/27)
(Section VI)

Table A1-14-1-6 Level A, B temperature and pressure input data (18/27)
(Section VI)

Table A1-14-1-6 Level A, B temperature and pressure input data (19/27)
(Section VII)

Table A1-14-1-6 Level A, B temperature and pressure input data (20/27)
(Section VII)

Table A1-14-1-6 Level A, B temperature and pressure input data (21/27)
(Section VII)

Table A1-14-1-6 Level A, B temperature and pressure input data (22/27)
(Section VIII)

Table A1-14-1-6 Level A, B temperature and pressure input data (23/27)
(Section VIII)

Table A1-14-1-6 Level A, B temperature and pressure input data (24/27)
(Section VIII)

Table A1-14-1-6 Level A, B temperature and pressure input data (25/27)
(Section IX)

Table A1-14-1-6 Level A, B temperature and pressure input data (26/27)
(Section IX)

Table A1-14-1-6 Level A, B temperature and pressure input data (27/27)
(Section IX)

Table A1-14-1-7 Level C, D maximum temperature and pressure input data

Figure A1-14-1-2 Floor response curve (1/6)
CVCS Letdown (CS02) FRS for MCP Nozzle
X (EW) direction (damping 4.0%)

Figure A1-14-1-2 Floor response curve (2/6)
CVCS Letdown (CS02) FRS for MCP Nozzle
Y (NS) direction (damping 4.0%)

Figure A1-14-1-2 Floor response curve (3/6)
CVCS Letdown (CS02) FRS for MCP Nozzle
Z (Vert.) direction (damping 4.0%)

Figure A1-14-1-2 Floor response curve (4/6)
CVCS Letdown (CS02) FRS for Piping
X (EW) direction (damping 4.0%)

Figure A1-14-1-2 Floor response curve (5/6)
CVCS Letdown (CS02) FRS for Piping
Y (NS) direction (damping 4.0%)

Figure A1-14-1-2 Floor response curve (6/6)
CVCS Letdown (CS02) FRS for Piping
Z (Vert.) direction (damping 4.0%)

Table A1-14-1-8 Seismic anchor displacement input data

Table A1-14-1-9 DBPB displacement input data

Figure A1-14-2-1 PIPESTRESS analysis model diagram

Table A1-14-2-1 Natural frequency analysis results

Figure A1-14-2-2 Frequency mode diagram (primary)

Figure A1-14-2-2 Frequency mode diagram (secondary)

Figure A1-14-2-2 Frequency mode diagram (tertiary)

Table A1-14-2-2 Thermal analysis results (ΔT1, ΔT2, Ta-Tb) (1/18)
(Section I)

Table A1-14-2-2 Thermal analysis results (ΔT1, ΔT2, Ta-Tb) (2/18)
(Section I)

Table A1-14-2-2 Thermal analysis results (ΔT1, ΔT2, Ta-Tb) (3/18)
(Section I)

Table A1-14-2-2 Thermal analysis results (ΔT1, ΔT2, Ta-Tb) (4/18)
(Section II)

Table A1-14-2-2 Thermal analysis results (ΔT1, ΔT2, Ta-Tb) (5/18)
(Section II)

Table A1-14-2-2 Thermal analysis results (ΔT1, ΔT2, Ta-Tb) (6/18)
(Section II)

Table A1-14-2-2 Thermal analysis results (ΔT1, ΔT2, Ta-Tb) (7/18)
(Section III)

Table A1-14-2-2 Thermal analysis results (ΔT1, ΔT2, Ta-Tb) (8/18)
(Section III)

Table A1-14-2-2 Thermal analysis results (ΔT1, ΔT2, Ta-Tb) (9/18)
(Section III)

Table A1-14-2-2 Thermal analysis results (ΔT1, ΔT2, Ta-Tb) (1018)
(Section IV)

Table A1-14-2-2 Thermal analysis results (ΔT1, ΔT2, Ta-Tb) (11/18)
(Section IV)

Table A1-14-2-2 Thermal analysis results (ΔT1, ΔT2, Ta-Tb) (12/18)
(Section IV)

Table A1-14-2-2 Thermal analysis results (ΔT1, ΔT2, Ta-Tb) (13/18)
(Section V)

Table A1-14-2-2 Thermal analysis results (ΔT1, ΔT2, Ta-Tb) (14/18)
(Section V)

Table A1-14-2-2 Thermal analysis results (ΔT1, ΔT2, Ta-Tb) (15/18)
(Section V)

Table A1-14-2-2 Thermal analysis results (ΔT1, ΔT2, Ta-Tb) (16/18)
(Section VI)

Table A1-14-2-2 Thermal analysis results (ΔT1, ΔT2, Ta-Tb) (17/18)
(Section VI)

Table A1-14-2-2 Thermal analysis results (ΔT1, ΔT2, Ta-Tb) (18/18)
(Section VI)

Table A1-14-2-3 Piping stress and fatigue evaluation results
(Piping that exceeds 1 inch NB–3650 evaluation)

Table A1-14-2-3 Piping stress and fatigue evaluation results
(Piping of 1 inch or less NC–3650 evaluation)

Appendix 1-15

CS04
CVCS Seal Injection A Line

Piping Analysis Results

1. INPUT

1.1 Used for creating the pipe structural model	
1.1.1 Block division and piping specifications	Table A1-15-1-1
1.1.2 Piping isometrics	Figure A1-15-1-1
1.1.3 Concentrated mass	Table A1-15-1-2
1.1.4 Support point rigidity	Table A1-15-1-3
1.1.5 Valve rigidity	Table A1-15-1-4
1.2 Used for creating load conditions	
1.2.1 Level A/B design transient	see main text
1.2.2 Level A/B thermal displacement input data	Table A1-15-1-5
1.2.3 Level A, B temperature and pressure input data	Table A1-15-1-6
1.2.4 Level C, D maximum temperature and pressure input data	Table A1-15-1-7
1.2.5 Floor response curve	Figure A1-15-1-2
1.2.6 Seismic anchor displacement input data	Table A1-15-1-8
1.2.7 DBPB displacement input data	Table A1-15-1-9

2. OUTPUT

2.1 PIPESTRESS analysis model diagram	Figure A1-15-2-1
2.2 Natural frequency analysis results	Table A1-15-2-1
2.3 Frequency mode diagram (primary to tertiary)	Figure A1-15-2-2
2.4 Thermal analysis results (ΔT1, ΔT2, Ta-Tb)	Table A1-15-2-2
2.5 Piping stress and fatigue evaluation results	Table A1-15-2-3

Table A1-15-1-1 Block division and piping specifications

US-APWR CS04
CVCS Seal Injection A Line
Figure A1-15-1-1 Piping Isometrics

Table A1-15-1-2 Concentrated mass

Table A1-15-1-3 Support point rigidity

Table A1-15-1-4 Valve rigidity

Table A1-15-1-5 Level A/B thermal displacement input data (1/3)
(Point: 9100)

Table A1-15-1-5 Level A/B thermal displacement input data (2/3)
(Point: 9100)

Table A1-15-1-5 Level A/B thermal displacement input data (3/3)
(Point: 9100)

Table A1-15-1-6 Level A, B temperature and pressure input data (1/18)
(Section I)

Table A1-15-1-6 Level A, B temperature and pressure input data (2/18)
(Section I)

Table A1-15-1-6 Level A, B temperature and pressure input data (3/18)
(Section I)

Table A1-15-1-6 Level A, B temperature and pressure input data (4/18)
(Section II)

Table A1-15-1-6 Level A, B temperature and pressure input data (5/18)
(Section II)

Table A1-15-1-6 Level A, B temperature and pressure input data (6/18)
(Section II)

Table A1-15-1-6 Level A, B temperature and pressure input data (7/18)
(Section III)

Table A1-15-1-6 Level A, B temperature and pressure input data (8/18)
(Section III)

Table A1-15-1-6 Level A, B temperature and pressure input data (9/18)
(Section III)

Table A1-15-1-6 Level A, B temperature and pressure input data (10/18)
(Section IV)

Table A1-15-1-6 Level A, B temperature and pressure input data (11/18)
(Section IV)

Table A1-15-1-6 Level A, B temperature and pressure input data (12/18)
(Section IV)

Table A1-15-1-6 Level A, B temperature and pressure input data (13/18)
(Section V)

Table A1-15-1-6 Level A, B temperature and pressure input data (14/18)
(Section V)

Table A1-15-1-6 Level A, B temperature and pressure input data (15/18)
(Section V)

Table A1-15-1-6 Level A, B temperature and pressure input data (16/18)
(Section VI)

Table A1-15-1-6 Level A, B temperature and pressure input data (17/18)
(Section VI)

Table A1-15-1-6 Level A, B temperature and pressure input data (18/18)
(Section VI)

Table A1-15-1-7 Level C, D maximum temperature and pressure input data

Figure A1-15-1-2 Floor response curve (1/6)
CVCS Seal Injection (CS04-07) FRS for RCP Nozzle
X (EW) direction (damping 4.0%)

Figure A1-15-1-2 Floor response curve (2/6)
CVCS Seal Injection (CS04-07) FRS for RCP Nozzle
Y (NS) direction (damping 4.0%)

Figure A1-15-1-2 Floor response curve (3/6)
CVCS Seal Injection (CS04-07) FRS for RCP Nozzle
Z (Vert.) direction (damping 4.0%)

Figure A1-15-1-2 Floor response curve (4/6)
CVCS Seal Injection (CS04-07) FRS for Piping
X (EW) direction (damping 4.0%)

Figure A1-15-1-2 Floor response curve (5/6)
CVCS Seal Injection (CS04-07) FRS for Piping
Y (NS) direction (damping 4.0%)

Figure A1-15-1-2 Floor response curve (6/6)
CVCS Seal Injection (CS04-07) FRS for Piping
Z (Vert.) direction (damping 4.0%)

Table A1-15-1-8 Seismic anchor displacement input data

Table A1-15-1-9 DBPB displacement input data

Figure A1-15-2-1 PIPESTRESS analysis model diagram

Table A1-15-2-1 Natural frequency analysis results

Figure A1-15-2-2 Frequency mode diagram (primary)

Figure A1-15-2-2 Frequency mode diagram (secondary)

Figure A1-15-2-2 Frequency mode diagram (tertiary)

TableA1-15- 2-2 Thermal analysis results (ΔT1, ΔT2, Ta-Tb) (1/9)
(Section I)

Table A1-15-2-2 Thermal analysis results (ΔT1, ΔT2, Ta-Tb) (2/9)
(Section I)

Table A1-15-2-2 Thermal analysis results (ΔT1, ΔT2, Ta-Tb) (3/9)
(Section I)

Table A1-15-2-2 Thermal analysis results (ΔT1, ΔT2, Ta-Tb) (4/9)
(Section II)

Table A1-15-2-2 Thermal analysis results (ΔT1, ΔT2, Ta-Tb) (5/9)
(Section II)

Table A1-15-2-2 Thermal analysis results (ΔT1, ΔT2, Ta-Tb) (6/9)
(Section II)

Table A1-15-2-2 Thermal analysis results (ΔT1, ΔT2, Ta-Tb) (7/9)
(Section III)

Table A1-15-2-2 Thermal analysis results (ΔT1, ΔT2, Ta-Tb) (8/9)
(Section III)

Table A1-15-2-2 Thermal analysis results (ΔT1, ΔT2, Ta-Tb) (9/9)
(Section III)

Table A1-15-2-3 Piping stress and fatigue evaluation results
(Piping that exceeds 1 inch NB–3650 evaluation)

Table A1-15-2-3 Piping stress and fatigue evaluation results
(Piping of 1 inch or less NC–3650 evaluation)

Appendix 1-16

CS05
CVCS Seal Injection B Line

Piping Analysis Results

1. INPUT

1.1 Used for creating the pipe structural model	
1.1.1 Block division and piping specifications	Table A1-16-1-1
1.1.2 Piping isometrics	Figure A1-16-1-1
1.1.3 Concentrated mass	Table A1-16-1-2
1.1.4 Support point rigidity	Table A1-16-1-3
1.1.5 Valve rigidity	Table A1-16-1-4
1.2 Used for creating load conditions	
1.2.1 Level A/B design transient	see main text
1.2.2 Level A/B thermal displacement input data	Table A1-16-1-5
1.2.3 Level A, B temperature and pressure input data	Table A1-16-1-6
1.2.4 Level C, D maximum temperature and pressure input data	Table A1-16-1-7
1.2.5 Floor response curve	Figure A1-16-1-2
1.2.6 Seismic anchor displacement input data	Table A1-16-1-8
1.2.7 DBPB displacement input data	Table A1-16-1-9

2. OUTPUT

2.1 PIPESTRESS analysis model diagram	Figure A1-16-2-1
2.2 Natural frequency analysis results	Table A1-16-2-1
2.3 Frequency mode diagram (primary to tertiary)	Figure A1-16-2-2
2.4 Thermal analysis results (ΔT1, ΔT2, Ta-Tb)	Table A1-16-2-2
2.5 Piping stress and fatigue evaluation results	Table A1-16-2-3

Table A1-16-1-1 Block division and piping specifications

US-APWR CS05
CVCS Seal Injection B Line
Figure A1-16-1-1 Piping Isometrics

Table A1-16-1-2 Concentrated mass

Table A1-16-1-3 Support point rigidity

Table A1-16-1-4 Valve rigidity

Table A1-16-1-5 Level A/B thermal displacement input data (1/3)
(Point: 9100)

Table A1-16-1-5 Level A/B thermal displacement input data (2/3)
(Point: 9100)

Table A1-16-1-5 Level A/B thermal displacement input data (3/3)
(Point: 9100)

Table A1-16-1-6 Level A, B temperature and pressure input data (1/18)
(Section I)

Table A1-14-1-6 Level A, B temperature and pressure input data (2/18)
(Section I)

Table A1-16-1-6 Level A, B temperature and pressure input data (3/18)
(Section I)

Table A1-16-1-6 Level A, B temperature and pressure input data (4/18)
(Section II)

Table A1-16-1-6 Level A, B temperature and pressure input data (5/18)
(Section II)

Table A1-16-1-6 Level A, B temperature and pressure input data (6/18)
(Section II)

Table A1-16-1-6 Level A, B temperature and pressure input data (7/18)
(Section III)

Table A1-16-1-6 Level A, B temperature and pressure input data (8/18)
(Section III)

Table A1-16-1-6 Level A, B temperature and pressure input data (9/18)
(Section III)

Table A1-16-1-6 Level A, B temperature and pressure input data (10/18)
(Section IV)

Table A1-16-1-6 Level A, B temperature and pressure input data (11/18)
(Section IV)

Table A1-16-1-6 Level A, B temperature and pressure input data (12/18)
(Section IV)

Table A1-16-1-6 Level A, B temperature and pressure input data (13/18)
(Section V)

Table A1-16-1-6 Level A, B temperature and pressure input data (14/18)
(Section V)

Table A1-16-1-6 Level A, B temperature and pressure input data (15/18)
(Section V)

Table A1-16-1-6 Level A, B temperature and pressure input data (16/18)
(Section VI)

Table A1-16-1-6 Level A, B temperature and pressure input data (17/18)
(Section VI)

Table A1-16-1-6 Level A, B temperature and pressure input data (18/18)
(Section VI)

Table A1-16-1-7 Level C, D maximum temperature and pressure input data

Figure A1-16-1-2 Floor response curve (1/6)
CVCS Seal Injection (CS04-07) FRS for RCP Nozzle
X (EW) direction (damping 4.0%)

Figure A1-16-1-2 Floor response curve (2/6)
CVCS Seal Injection (CS04-07) FRS for RCP Nozzle
Y (NS) direction (damping 4.0%)

Figure A1-16-1-2 Floor response curve (3/6)
CVCS Seal Injection (CS04-07) FRS for RCP Nozzle
Z (Vert.) direction (damping 4.0%)

Figure A1-16-1-2 Floor response curve (4/6)
CVCS Seal Injection (CS04-07) FRS for Piping
X (EW) direction (damping 4.0%)

Figure A1-16-1-2 Floor response curve (5/6)
CVCS Seal Injection (CS04-07) FRS for Piping
Y (NS) direction (damping 4.0%)

Figure A1-16-1-2 Floor response curve (6/6)
CVCS Seal Injection (CS04-07) FRS for Piping
Z (Vert.) direction (damping 4.0%)

Table A1-16-1-8 Seismic anchor displacement input data

Table A1-16-1-9 DBPB displacement input data

Figure A1-16-2-1 PIPESTRESS analysis model diagram

Table A1-16-2-1 Natural frequency analysis results

Figure A1-16-2-2 Frequency mode diagram (primary)

Figure A1-16-2-2 Frequency mode diagram (secondary)

Figure A1-16-2-2 Frequency mode diagram (tertiary)

Table A1-16-2-2 Thermal analysis results (ΔT1, ΔT2, Ta-Tb) (1/9)
(Section I)

Table A1-16-2-2 Thermal analysis results (ΔT1, ΔT2, Ta-Tb) (2/9)
(Section I)

Table A1-16-2-2 Thermal analysis results (ΔT1, ΔT2, Ta-Tb) (3/9)
(Section I)

Table A1-16-2-2 Thermal analysis results (ΔT1, ΔT2, Ta-Tb) (4/9)
(Section II)

Table A1-16-2-2 Thermal analysis results (ΔT1, ΔT2, Ta-Tb) (5/9)
(Section II)

Table A1-16-2-2 Thermal analysis results (ΔT1, ΔT2, Ta-Tb) (6/9)
(Section II)

Table A1-16-2-2 Thermal analysis results (ΔT1, ΔT2, Ta-Tb) (7/9)
(Section III)

Table A1-16-2-2 Thermal analysis results (ΔT1, ΔT2, Ta-Tb) (8/9)
(Section III)

Table A1-16-2-2 Thermal analysis results (ΔT1, ΔT2, Ta-Tb) (9/9)
(Section III)

Table A1-16-2-3 Piping stress and fatigue evaluation results
(Piping that exceeds 1 inch NB-3650 evaluation)

Table A1-16-2-3 Piping stress and fatigue evaluation results
(Piping of 1 inch or less NC-3650 evaluation)

Appendix 1-17

CS06
CVCS Seal Injection C Line

Piping Analysis Results

1. INPUT

1.1 Used for creating the pipe structural model	
1.1.1 Block division and piping specifications	Table A1-17-1-1
1.1.2 Piping isometrics	Figure A1-17-1-1
1.1.3 Concentrated mass	Table A1-17-1-2
1.1.4 Support point rigidity	Table A1-17-1-3
1.1.5 Valve rigidity	Table A1-17-1-4
1.2 Used for creating load conditions	
1.2.1 Level A/B design transient	see main text
1.2.2 Level A/B thermal displacement input data	Table A1-17-1-5
1.2.3 Level A, B temperature and pressure input data	Table A1-17-1-6
1.2.4 Level C, D maximum temperature and pressure input data	Table A1-17-1-7
1.2.5 Floor response curve	Figure A1-17-1-2
1.2.6 Seismic anchor displacement input data	Table A1-17-1-8
1.2.7 DBPB displacement input data	Table A1-17-1-9

2. OUTPUT

2.1 PIPESTRESS analysis model diagram	Figure A1-17-2-1
2.2 Natural frequency analysis results	Table A1-17-2-1
2.3 Frequency mode diagram (primary to tertiary)	Figure A1-17-2-2
2.4 Thermal analysis results (ΔT1, ΔT2, Ta-Tb)	Table A1-17-2-2
2.5 Piping stress and fatigue evaluation results	Table A1-17-2-3

Table A1-17-1-1 Block division and piping specifications

US-APWR CS06
CVCS Seal Injection C Line
Figure A1-17-1-1 Piping Isometrics

Table A1-17-1-2 Concentrated mass

Table A1-17-1-3 Support point rigidity

Table A1-17-1-4 Valve rigidity

Table A1-17-1-5 Level A/B thermal displacement input data (1/3)
(Point: 9100)

Table A1-17-1-5 Level A/B thermal displacement input data (2/3)
(Point: 9100)

Table A1-17-1-5 Level A/B thermal displacement input data (3/3)
(Point: 9100)

Table A1-17-1-6 Level A, B temperature and pressure input data (1/18)
(Section I)

Table A1-17-1-6 Level A, B temperature and pressure input data (2/18)
(Section I)

Table A1-17-1-6 Level A, B temperature and pressure input data (3/18)
(Section I)

Table A1-17-1-6 Level A, B temperature and pressure input data (4/18)
(Section II)

Table A1-17-1-6 Level A, B temperature and pressure input data (5/18)
(Section II)

Table A1-17-1-6 Level A, B temperature and pressure input data (6/18)
(Section II)

Table A1-17-1-6 Level A, B temperature and pressure input data (7/18)
(Section III)

Table A1-17-1-6 Level A, B temperature and pressure input data (8/18)
(Section III)

Table A1-17-1-6 Level A, B temperature and pressure input data (9/18)
(Section III)

Table A1-17-1-6 Level A, B temperature and pressure input data (10/18)
(Section IV)

Table A1-17-1-6 Level A, B temperature and pressure input data (11/18)
(Section IV)

Table A1-17-1-6 Level A, B temperature and pressure input data (12/18)
(Section IV)

Table A1-17-1-6 Level A, B temperature and pressure input data (13/18)
(Section V)

Table A1-17-1-6 Level A, B temperature and pressure input data (14/18)
(Section V)

Table A1-17-1-6 Level A, B temperature and pressure input data (15/18)
(Section V)

Table A1-17-1-6 Level A, B temperature and pressure input data (16/18)
(Section VI)

Table A1-17-1-6 Level A, B temperature and pressure input data (17/18)
(Section VI)

Table A1-17-1-6 Level A, B temperature and pressure input data (18/18)
(Section VI)

Table A1-17-1-7 Level C, D maximum temperature and pressure input data

Figure A1-17-1-2 Floor response curve (1/6)
CVCS Seal Injection (CS04-07) FRS for RCP Nozzle
X (EW) direction (damping 4.0%)

Figure A1-17-1-2 Floor response curve (2/6)
CVCS Seal Injection (CS04-07) FRS for RCP Nozzle
Y (NS) direction (damping 4.0%)

Figure A1-17-1-2 Floor response curve (3/6)
CVCS Seal Injection (CS04-07) FRS for RCP Nozzle
Z (Vert.) direction (damping 4.0%)

Figure A1-17-1-2 Floor response curve (4/6)
CVCS Seal Injection (CS04-07) FRS for Piping
X (EW) direction (damping 4.0%)

Figure A1-17-1-2 Floor response curve (5/6)
CVCS Seal Injection (CS04-07) FRS for Piping
Y (NS) direction (damping 4.0%)

Figure A1-17-1-2 Floor response curve (6/6)
CVCS Seal Injection (CS04-07) FRS for Piping
Z (Vert.) direction (damping 4.0%)

Table A1-17-1-8 Seismic anchor displacement input data

Table A1-17-1-9 DBPB displacement input data

Figure A1-17-2-1 PIPESTRESS analysis model diagram

Table A1-17-2-1 Natural frequency analysis results

Figure A1-17-2-2 Frequency mode diagram (primary)

Figure A1-17-2-2 Frequency mode diagram (secondary)

Figure A1-17-2-2 Frequency mode diagram (tertiary)

Table A1-17-2-2 Thermal analysis results (ΔT1, ΔT2, Ta-Tb) (1/9)
(Section I)

Table A1-17-2-2 Thermal analysis results (ΔT1, ΔT2, Ta-Tb) (2/9)
(Section I)

Table A1-17-2-2 Thermal analysis results (ΔT1, ΔT2, Ta-Tb) (3/9)
(Section I)

Table A1-17-2-2 Thermal analysis results (ΔT1, ΔT2, Ta-Tb) (4/9)
(Section II)

Table A1-17-2-2 Thermal analysis results (ΔT1, ΔT2, Ta-Tb) (5/9)
(Section II)

Table A1-17-2-2 Thermal analysis results (ΔT1, ΔT2, Ta-Tb) (6/9)
(Section II)

Table A1-17-2-2 Thermal analysis results (ΔT1, ΔT2, Ta-Tb) (7/9)
(Section III)

Table A1-17-2-2 Thermal analysis results (ΔT1, ΔT2, Ta-Tb) (8/9)
(Section III)

Table A1-17-2-2 Thermal analysis results (ΔT1, ΔT2, Ta-Tb) (9/9)
(Section III)

Table A1-17-2-3 Piping stress and fatigue evaluation results
(Piping that exceeds 1 inch NB–3650 evaluation)

Table A1-17-2-3 Piping stress and fatigue evaluation results
(Piping of 1 inch or less NC–3650 evaluation)

Appendix 1-18

CS07
CVCS Seal Injection D Line

Piping Analysis Results

1. INPUT

1.1 Used for creating the pipe structural model	
1.1.1 Block division and piping specifications	Table A1-18-1-1
1.1.2 Piping isometrics	Figure A1-18-1-1
1.1.3 Concentrated mass	Table A1-18-1-2
1.1.4 Support point rigidity	Table A1-18-1-3
1.1.5 Valve rigidity	Table A1-18-1-4
1.2 Used for creating load conditions	
1.2.1 Level A/B design transient	see main text
1.2.2 Level A/B thermal displacement input data	Table A1-18-1-5
1.2.3 Level A, B temperature and pressure input data	Table A1-18-1-6
1.2.4 Level C, D maximum temperature and pressure input data	Table A1-18-1-7
1.2.5 Floor response curve	Figure A1-18-1-2
1.2.6 Seismic anchor displacement input data	Table A1-18-1-8
1.2.7 DBPB displacement input data	Table A1-18-1-9

2. OUTPUT

2.1 PIPESTRESS analysis model diagram	Figure A1-18-2-1
2.2 Natural frequency analysis results	Table A1-18-2-1
2.3 Frequency mode diagram (primary to tertiary)	Figure A1-18-2-2
2.4 Thermal analysis results (ΔT1, ΔT2, Ta-Tb)	Table A1-18-2-2
2.5 Piping stress and fatigue evaluation results	Table A1-18-2-3

Table A1-18-1-1 Block division and piping specifications

US-APWR CS07
CVCS Seal Injection D Line
Figure A1-18-1-1 Piping Isometrics

Table A1-18-1-2 Concentrated mass

Table A1-18-1-3 Support point rigidity

Table A1-18-1-4 Valve rigidity

Table A1-18-1-5 Level A/B thermal displacement input data (1/3)
(Point: 9100)

Table A1-18-1-5 Level A/B thermal displacement input data (2/3)
(Point: 9100)

Table A1-18-1-5 Level A/B thermal displacement input data (3/3)
(Point: 9100)

Table A1-18-1-6 Level A, B temperature and pressure input data (1/18)
(Section I)

Table A1-18-1-6 Level A, B temperature and pressure input data (2/18)
(Section I)

Table A1-18-1-6 Level A, B temperature and pressure input data (3/18)
(Section I)

Table A1-18-1-6 Level A, B temperature and pressure input data (4/18)
(Section II)

Table A1-18-1-6 Level A, B temperature and pressure input data (5/18)
(Section II)

Table A1-18-1-6 Level A, B temperature and pressure input data (6/18)
(Section II)

Table A1-18-1-6 Level A, B temperature and pressure input data (7/18)
(Section III)

Table A1-18-1-6 Level A, B temperature and pressure input data (8/18)
(Section III)

Table A1-18-1-6 Level A, B temperature and pressure input data (9/18)
(Section III)

Table A1-18-1-6 Level A, B temperature and pressure input data (10/18)
(Section IV)

Table A1-18-1-6 Level A, B temperature and pressure input data (11/18)
(Section IV)

Table A1-18-1-6 Level A, B temperature and pressure input data (12/18)
(Section IV)

Table A1-18-1-6 Level A, B temperature and pressure input data (13/18)
(Section V)

Table A1-18-1-6 Level A, B temperature and pressure input data (14/18)
(Section V)

Table A1-18-1-6 Level A, B temperature and pressure input data (15/18)
(Section V)

Table A1-18-1-6 Level A, B temperature and pressure input data (16/18)
(Section VI)

Table A1-18-1-6 Level A, B temperature and pressure input data (17/18)
(Section VI)

Table A1-18-1-6 Level A, B temperature and pressure input data (18/18)
(Section VI)

Table A1-18-1-7 Level C, D maximum temperature and pressure input data

Figure A1-18-1-2 Floor response curve (1/6)
CVCS Seal Injection (CS04-07) FRS for RCP Nozzle
X (EW) direction (damping 4.0%)

Figure A1-18-1-2 Floor response curve (2/6)
CVCS Seal Injection (CS04-07) FRS for RCP Nozzle
Y (NS) direction (damping 4.0%)

Figure A1-18-1-2 Floor response curve (3/6)
CVCS Seal Injection (CS04-07) FRS for RCP Nozzle
Z (Vert.) direction (damping 4.0%)

Figure A1-18-1-2 Floor response curve (4/6)
CVCS Seal Injection (CS04-07) FRS for Piping
X (EW) direction (damping 4.0%)

Figure A1-18-1-2 Floor response curve (5/6)
CVCS Seal Injection (CS04-07) FRS for Piping
Y (NS) direction (damping 4.0%)

Figure A1-18-1-2 Floor response curve (6/6)
CVCS Seal Injection (CS04-07) FRS for Piping
Z (Vert.) direction (damping 4.0%)

Table A1-18-1-8 Seismic anchor displacement input data

Table A1-18-1-9 DBPB displacement input data

Figure A1-18-2-1 PIPESTRESS analysis model diagram

Table A1-18-2-1 Natural frequency analysis results

Figure A1-18-2-2 Frequency mode diagram (primary)

Figure A1-18-2-2 Frequency mode diagram (secondary)

Figure A1-18-2-2 Frequency mode diagram (tertiary)

Table A1-18-2-2 Thermal analysis results (ΔT1, ΔT2, Ta-Tb) (1/9)
(Section I)

Table A1-18-2-2 Thermal analysis results (ΔT1, ΔT2, Ta-Tb) (2/9)
(Section I)

Table A1-18-2-2 Thermal analysis results (ΔT1, ΔT2, Ta-Tb) (3/9)
(Section I)

Table A1-18-2-2 Thermal analysis results (ΔT1, ΔT2, Ta-Tb) (4/9)
(Section II)

Table A1-18-2-2 Thermal analysis results (ΔT1, ΔT2, Ta-Tb) (5/9)
(Section II)

Table A1-18-2-2 Thermal analysis results (ΔT1, ΔT2, Ta-Tb) (6/9)
(Section II)

Table A1-18-2-2 Thermal analysis results (ΔT1, ΔT2, Ta-Tb) (7/9)
(Section III)

Table A1-18-2-2 Thermal analysis results (ΔT1, ΔT2, Ta-Tb) (8/9)
(Section III)

Table A1-18-2-2 Thermal analysis results (ΔT1, ΔT2, Ta-Tb) (9/9)
(Section III)

Table A1-18-2-3 Piping stress and fatigue evaluation results
(Piping that exceeds 1 inch NB–3650 evaluation)

Table A1-18-2-3 Piping stress and fatigue evaluation results
(Piping of 1 inch or less NC–3650 evaluation)

Appendix 2

LEAK BEFORE BREAK EVALUATION

TABLE OF CONTENTS

A2 LEAK BEFORE BREAK EVALUATION A2-3
A2.1 INTRODUCTION A2-3
A2.2 MODIFIED BOUNDING ANALYSIS CURVE APPROACH A2-3
A2.2.1 LEAK RATE DETERMINATION A2-3
A2.2.2 FRACTURE MECHANICS ANALYSIS A2-4
A2.2.3 GENERATION OF BAC A2-4
A2.3 CALCULATION OF LBB EVALUATION POINTS A2-5
A2.4 BAC SETTING FOR LBB EVALUATION A2-6
A2.5 REFERENCES A2-7

A2 LEAK BEFORE BREAK EVALUATION

A2.1 Introduction

The leak-before-break (LBB) evaluation of the US-APWR follows the methodology in accordance with General Design Criteria (GDC) 4 of 10CFR50, Appendix A (Ref. 1), NUREG-0800, Standard Review Plan (SRP) 3.6.3, Rev. 1, (Ref. 2), and NUREG-1061, Volume 3 (Ref. 3). The evaluation includes an assessment of all potential failure mechanisms, and development of bounding analysis curves (BACs) that define the allowable maximum stress as a function of the normal operating stress for each piping systems or subsystem with different materials.

The LBB analysis is described in detail in Section 3.6.3 of the US-APWR Design Control Document (DCD), with details in Appendix 3B. That appendix provides the development of the BACs for the piping.

A LBB analysis was done for the pressurizer surge line and accumulator line. Table A2.0-1 shows the conditions used for development of the BAC.

A2.2 Modified Bounding Analysis Curve Approach

Work has currently been completed to update the BAC analysis for Appendix 3B of the DCD, Rev.1. The following methods will be used for the LBB evaluation:

(1) Calculation of a leakage rate and determination of leakage flaw sizes as a function of normal operating conditions

(2) Calculation of critical flaw sizes as a function of applied stress

(3) Development of the BACs from the above

A2.2.1 Leak Rate Determination

The DCD described the thermal-hydraulics model used to develop the DCD curves. The fundamental equations for calculation of flow through a circumferential crack in a pipe are described. For the revised leakage rate calculations, the following revisions have been made:

(1) The EPRI-developed PICEP computer program (Ref. 4) was used to calculate leakage. PICEP incorporates the thermal-hydraulic model described in the DCD but has improved methods for calculation of the crack opening area based on the EPRI-developed methods for elastic plastic fracture mechanics (Ref. 5).

(2) For conservatism, the crack opening area was calculated without taking credit for the plastic opening. This is consistent with the approach in the DCD. In addition, the plastic zone correction factor was conservatively based on a flow stress (not yield stress) of 51 ksi (consistent with the maximum flow stress in SRP 3.6.3), minimizing the effects of plastic zone correction on the crack opening area increase due to plasticity effects.

(3) The coefficient of discharge (C_D) was taken as 0.61. Consistent with testing conducted at the time of the PICEP development and verification that it would adequately calculate leakage, the crack roughness for assumed fatigue cracks was taken as 0.000197 inches and no turns were included. These assumptions are consistent with those made at the time that SRP 3.6.3 and NUREG-1061 Volume were published that required a factor of 10 between the calculated leakage and the plant leakage detection system to cover various uncertainties (Ref. 6).

(4) Based on a review of revisions to Regulatory Guide 1.45 (Ref. 7), it was determined that the sensitivity of the US-APWR leakage detection system can be reduced to 0.5 gpm, allowing the leakage flaw sizes to be based on a leak of 5 gpm.

A2.2.2. Fracture Mechanics Analysis

Because austenitic stainless steel has high fracture toughness, limit load methodology can be applied to evaluate the fracture behavior of the piping. The methods for limit load evaluation as described in SRP 3.6.3 and in the DCD are used. The flow stress used in the analysis is based on ASME Code minimum values at temperature, conservatively applying these same values for SMAW weldments, since this is less than the specified value of 51 ksi in SRP 3.6.3. Since stresses for the various loadings will be combined by absolute sum methods, the factor of safety for maximum load is 1.0, such that the critical flaw size was determined to be twice the leakage flaw size.

A2.2.3 Generation of BAC

The BAC methodology uses a LBB assessment diagram to show that LBB requirements are met for all weld locations in each piping system. In the BAC diagram $\sigma_{nor} = |P_m| + |P_b|$, the sum of the membrane stress and the bending stress under normal operation, is plotted along the abscissa, and $\sigma_{max} = |P_{m_max}| + |P_{b_max}|$, the absolute sum of the membrane stress and the bending stress under the maximum load, is plotted along the ordinate. The procedure used in developing the BAC diagram was as follows:

(1) Determine the leakage crack length for a crack with a leak rate 10 times as large as the detectable leak rate by applying the abscissa's normal stress σ_{nor}.

(2) Based on a critical crack size of twice the leakage crack length, determine the maximum stress σ_{max} that is required to produce this critical crack size.

(3) Perform the above steps at a sufficient number of points of normal operating stress to develop of smooth curve of the maximum stress σ_{max} as a function of the abscissa's normal stress σ_{nor}.

(4) For the modified BACs, the normal operating stress was varied from that due to pressure up to a limit of 50 ksi. This upper bound is arbitrary and is a stress greater than will be limited by the ASME Code stress limits for the piping that also must be satisfied.

Per the requirements in SRP 3.6.3, the maximum stress is a combination of the effects of pressure + dead weight + maximum seismic stress if the weld is TIG. If the weld is SMAW or

SAW, the maximum stress is a combination of the effects of pressure + dead weight + thermal expansion + maximum seismic stress.

For the BAC curves, the membrane stresses were calculated based on the axial force divided by the metal area. For the piping evaluated in this report, the axial loads due to loads other than pressure are not significant. The axial pressure force was based on the internal pipe pressure times the internal area of the weld. For convenience, the bending stresses included in the BAC curves were based on the piping moment divided by the weld section modulus, effectively using the stress at the outside of the piping. All of the BACs were developed using the nominal thickness and diameter of the welds.

If the actual stresses in the piping system, calculated using the same methods as above, fall in the regions below the BAC, then LBB requirements are satisfied.

A2.3 Calculation of LBB Evaluation Points

The assessment of LBB acceptability was performed based on the calculated stresses at each weld in the piping system being evaluated. For each weld, stresses for normal operation and the maximum stress conditions were calculated from the piping stress analysis.

The stress for normal operation along the abscissa of the BAC was calculated for each weld in the piping system as follows.

1) For all types of welds, calculate the algebraic sum of the axial force, the bending and torque moment due to deadweight, the internal pressure, and the thermal expansion. Thermal expansion is always included since it will contribute to the crack opening area.

$$F = F_{DW} + F_{Th} + F_P$$

$$M = \sqrt{\left((M_X)^2 + (M_Y)^2 + (M_Z)^2\right)}$$

$$M_X = (M_X)_{DW} + (M_X)_{Th}$$

$$M_Y = (M_Y)_{DW} + (M_Y)_{Th}$$

$$M_Z = (M_Z)_{DW} + (M_Z)_{Th}$$

Where *F* = Axial force

M = Bending moment

Subscripts indicate the loads shown below

DW = Deadweight

Th = Thermal expansion

P = Internal pressure

x, y and *z* = Component of x,y and z direction.

2) Calculate the cross sectional area *A* and the section modulus *Z* assuming the minimum wall thickness.

3) Calculate the stress σ_{nor} at the evaluation point under normal operation.

$$\sigma_{nor} = P_m + P_b = F/A + M/Z$$

The maximum stress for each weld in the piping system was evaluated as follows:

1) For SMAW and SAW welds, calculate the absolute sum of the axial force, the bending and torque moment due to deadweight, the internal pressure, the thermal expansion, and earthquake using the following equations:

$$|F| = |F_{DW}| + |F_{Th}| + |F_P| + |F_{SSE}| + |F_{SAM}|$$
$$|M| = \sqrt{\left((M_X)^2 + (M_Y)^2 + (M_Z)^2\right)}$$
$$M_X = |(M_X)_{DW}| + |(M_X)_{Th}| + |(M_X)_{SSE}| + |(M_X)_{SAM}|$$
$$M_Y = |(M_Y)_{DW}| + |(M_Y)_{Th}| + |(M_Y)_{SSE}| + |(M_Y)_{SAM}|$$
$$M_Z = |(M_Z)_{DW}| + |(M_Z)_{Th}| + |(M_Z)_{SSE}| + |(M_Z)_{SAM}|$$

Where subscripts indicate the following loads.

SSE = Inertia load due to SSE

SAM = Seismic anchor motion load due to SSE.

2) If the weld is a TIG weld, the loads due to thermal expansion and seismic anchor movements may be excluded per SRP 3.6.3.

3) Calculate stress under the maximum load σ_{max} at the weld joint.

$$|\sigma_{\max}| = |P_{m_\max}| + |P_{b_\max}| = \left(|F|/A + |M|/Z\right)$$

The BAC assessment points were then plotted on the BAC to determine LBB acceptance. In some cases, the welds may not be acceptable if the assessment is based on the assumption of a SMAW weld joint. In this case, the weld joint can be qualified as a TIG weld, and this can be implemented in the piping system fabrication/construction on a location-unique basis.

A2.4 BAC Setting for LBB Evaluation

Table A2.0-1 lists the piping property of Pressurizer surge line and accumulator line selected for setting the BAC. The detailed BACs are shown in Figure A2.0-1 and Figure A2.0-2. Table A2.0-2 and Table A2.0-3 is the tabulated BAC points.

A2.5 References

1. 'General Design Criteria for Nuclear Power Plants,' "Domestic Licensing of Production and Utilization Facilities," Energy. Title 10, Code of Federal Regulation, Part 50, Appendix A, U.S. Nuclear Regulatory Commission, Washington, D.C.

2. Leak-Before-Break Evaluation Procedures,' "Design of Structures, Components, Equipment, and Systems," Standard Review Plan for the Review of Safety Analysis Reports for Nuclear Power Plants. NUREG-0800, Standard Review Plan 3.6.3, Rev. 1, U.S. Nuclear Regulatory Commission, Washington, DC, March 2007.

3. "Evaluation of Potential for Pipe Breaks," Report of U.S. NRC Piping Review Committee. NUREG-1061, Vol. 3, U.S. Nuclear Regulatory Commission< Washington, DC, 1984.

4. PICEP: Pipe Crack Evaluation Program. NP-3596-SR, Rev. 1, Electric Power Research Institute, 1987.

5. Kumar, V, and German, M. D., "Elastic-Plastic Fracture Analysis of Through-Wall and Surface Flaws in Cylinders," EPRI NP-5596, January 1988.

6. D. Abdollahian and B. Chexal, "Calculation of Leak Rates Through Cracks in Pipes and Tubes," EPRI NP-3395, Electric Power Research Institute, Palo Alto, CA, December 1983.

7. Regulatory Guide 1.45, "Guidance On Monitoring And Responding To Reactor Coolant System Leakage." U. S. Nuclear Regulatory Commission, May 2008.

Table A2.0-1 List of piping property for setting the BAC

Subsystem	OD, inches	t, inches	Material	Temp, ºF (1)	Pressure, psig (1)	Axial. Stress, ksi	BAC Figure No.	BAC Table No.
Surge Line (2)	16	1.594	SA-312 TP316	653	2,248 (2)	4.017	A2-1	A2-2
Accumulator Line	14	1.406	SA-312 TP316	551	2,296	4.058	A2-2	A2-3

Note:
1. Conditions from Reactor Coolant System DCD, Table 5.1-2
2. Used conservative lower 2243 psig for leakage which is the pressurizer end pressure.

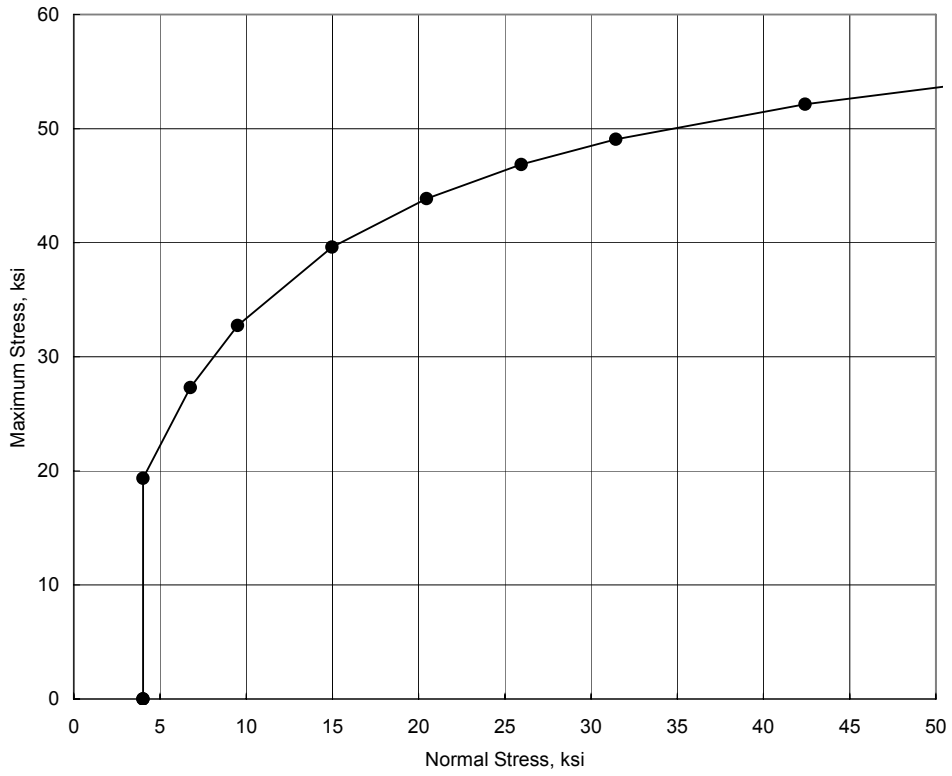

Figure A2.0-1 BAC for Surge Line

Table A2.0-2 The tabulated BAC points

Normal Stress, ksi	Maximum Stress, ksi
4.008	0
4.008	19.355
6.751	27.288
9.494	32.738
14.98	39.619
20.466	43.873
25.952	46.847
31.438	49.059
42.411	52.148
53.383	54.242

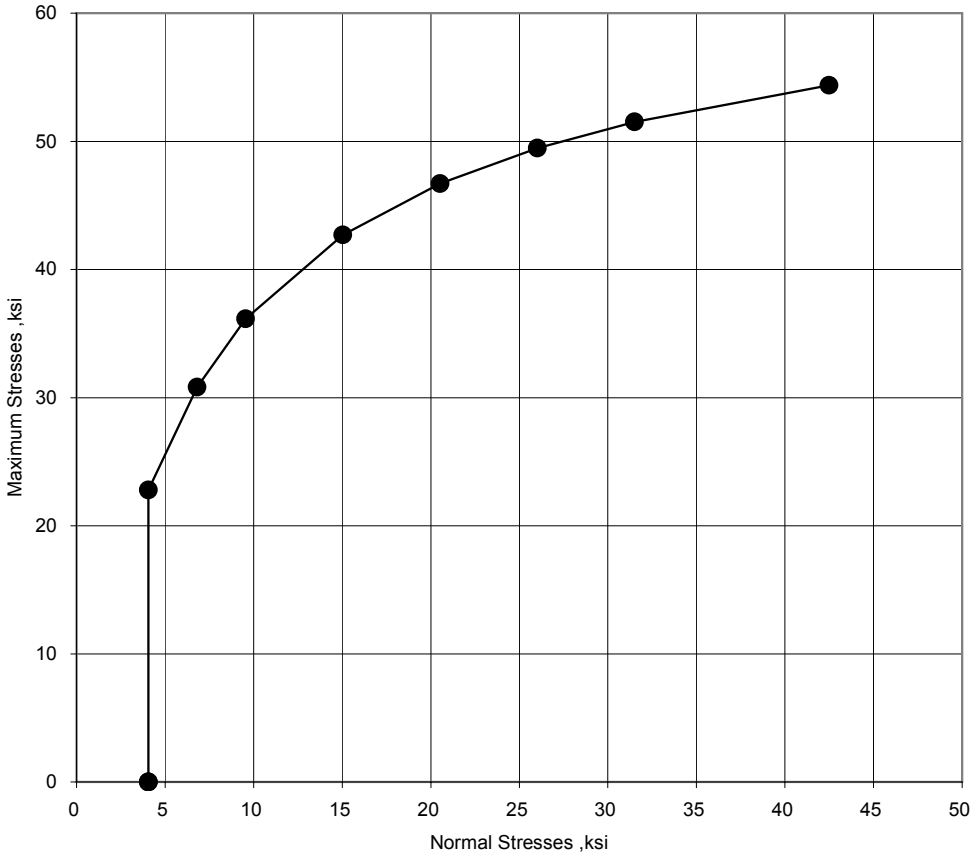

Figure A2.0-2 BAC for Accumulator Line

Table A2.0-3 The tabulated BAC points

Normal Stress, ksi	Maximum Stress, ksi
4.058	0.000
4.058	22.784
6.802	30.821
9.547	36.151
15.037	42.709
20.527	46.715
26.017	49.475
31.506	51.522
42.486	54.365
53.465	56.290