MAR 30 1989

Mr. David L. Quaid
21 Summer Street
Duxbury, Massachusetts 02332

Dear Mr. Quaid:

Thank you for the information you sent in your transmittal postmarked February 18, 1989. For your information, I have been designated as the appropriate NRC individual for receipt of information of this type. I will keep it on file in Region I and will also ensure it is entered into the Public Document Files.

As I indicated to you in our earlier telephone call, I have responsibility for the operation of the NRC TLD Direct Radiation Monitoring Network. If you have questions regarding that network relative to your own monitoring program, please feel free to call me (215) 337-5281.

Original Signed By:
Walter J. Pasciak

Walter J. Pasciak, Ph. D., Chief
Effluents Radiation Protection Section
Facilities Radiological Safety and
Safeguards Branch

OFFICIAL RECORD COPY

ARKANSAS TECH UNIVERSITY • Office of the President

November 13, 1989

Mr. Alexander Adams, Jr.
Non-Power Reactor, Decommissioning, and
Environmental Project Directorate
U.S. Nuclear Regulatory Commission
Washington, D.C. 20555

RE: Project Number 677. Application for a Construction Permit/Operating License for Arkansas Tech University TRIGA Reactor Facility.

Dear Mr. Adams:

This document is part of an application for a construction permit/operating license for Arkansas Tech University's proposed TRIGA reactor factily.

The following information is intended to meet the requirements of 10 CFR 50.33 (parts (a), (b), (c), (e), and (f)).

(a) Arkansas Tech University

(b) Russellville, Arkansas 72801

(c) Arkansas Tech is a state-supported university

(e) Arkansas Tech University is applying for a class 104 license to construct and operate a TRIGA reasearch reactor facility. The reactor will be used for education and research. License is sought for a 20 year period.

(f) Construction costs are estimated at $1,000,000. ATU has $250,000 from industry and institutional funds and an additional $850,000 is appropriated for the project in the Energy and Water Development Bill (H.R. 2696) for the fiscal year ending September 30, 1990. Fuel will be requested from the U.S. Department of Energy.

8911200202 891113
PDR PROJ PDC
677A

Ltr Encl

A020 Add: NRR/DREP/EPB 1 1

1/1

RUSSELLVILLE, ARKANSAS • 72801-2222

Operating costs for year one are estimated as follows:

Facility Director (½ time)	$26,000
Reactor Supervisor (½ time)	20,000
Technician/Operator (full-time)	25,000
Administrative Secretary (full-time)	18,000
Fringe Benefits (27%)	24,000
Utilities	24,000
Maintenance	20,000
Total	$157,030

Operating costs are estimated to increase 4% per year to give the following totals:

Year two	$163,311
Year three	$169,844
Year four	$176,637
Year five	$183,703

Funds for operation and maintenance will be made available through ATU budgets.

The cost of decommissioning the TRIGA reactor, in 1989 dollars, is estimated at $300,000. The University intends to request appropriations of funds from the State of Arkansas for decommissioning when a decision is made to decommission the facility.

In accordance with 10 CFR 50.34 the Safety Analysis Report, Emergency Plan, Technical Specifications, and Environmental Impact Study are enclosed. The Physical Security Plan is being sent separately.

Sincerely,

Kenneth Kersh

Kenneth Kersh

Enclosure

cc: USNRC Region IV Administrator
USNRC Document Control

SAFETY ANALYSIS REPORT

ARKANSAS TECH UNIVERSITY

NUCLEAR REACTOR

(TRIGA MARK I)

September, 1989

8911200209 891113
PDR PROJ
677A PDC

TABLE OF CONTENTS

LIST OF FIGURES

LIST OF TABLES

ADDENDUM

1. INTRODUCTION

This report describes the TRIGA (Manufactured by GA Technologies Inc.) Mark I reactor facility proposed for construction at Arkansas Tech University as part of the Center for Energy Studies, and provides a safety evaluation which shows that the reactor facility does not cause undue risk to the health and safety of the public. A reactor with some common components to this reactor was licensed and operated under the same conditions at Michigan State University since 1967 and was decommissioned in 1989. Safe operation of the reactor for steady power levels of 250 kW (thermal) and pulse powers of 300 MW (thermal) was established by Michigan State University. This safety analysis demonstrates safe operation at thermal power levels up to 250 kW steady state and 300 MW pulse power.

1.1 PRINCIPAL DESIGN CRITERIA

The reactor will be operated in two basic modes: steady state and pulsing. Reactor power levels in the steady state mode will range up to and include 250 kW(t). Pulsed mode operation will take place by step reactivity insertions with the reactor initially at a power level less than 1 kW. The maximum step reactivity insertion will be 1.4 %k $\left[\%k \equiv \% \frac{\delta k}{k}\right]$ ($2.0), which will produce a peak reactor power of approximately 300 MW(t) and a pulse width at half maximum of 50 ms with a prompt energy release of approximately 8 MW-s. A summary of principal design parameters for the reactor is given in Table 1-1.

1.2 DESIGN HIGHLIGHTS

The reactor will be located in a pool structure. Reactor cooling will be provided by natural circulation of pool water which is cooled and purified in external coolant circuits. Reactor experimental facilities will include a rotary specimen rack, a pneumatic transfer system, and core irradiation tubes.

The inherent safety of this TRIGA reactor has been demonstrated by the extensive experience acquired from similar TRIGA systems throughout the world. Forty-eight TRIGA reactors are now in operation throughout the world and of these, 31 are pulsing. TRIGA reactors have more than 450 reactor years of operat-

Table 1-1 Principal Design Parameters

Reactor type	TRIGA Mark I
Operation	Steady-state, pulse
Steady state power (max)	250 kW(t)
Pulse power (max)	300 MW(t)
Maximum step reactivity	1.4 %k ($2.0)
Pulse width at half maximum	≈ 30 ms
Energy released	≈ 8 MW-s
Fuel element design	
Fuel-moderator Material	U-ZrH (Zr/H = 1.6 nominal, 1.65 max)
Uranium content	8.5 wt %
Uranium enrichment	19.7% U-235
U-235 in each element	≈ 35 g
Shape	Cylindrical
Length of fuel	38.1 cm (15 in.) active length 75.3 cm (29.63 in.) overall
Diameter of fuel	3.63 cm (1.43 in.) O.D.
Cladding material	304 Stainless steel
Cladding thickness	0.051 cm (0.020 in.)
Fuel element total mass	3.2 kg
Number of fuel elements	
Critical core	≈ 64
Operational core	≈ 70
Uranium inventory	≈ 2.45 kg U-235
Excess reactivity	2.25 %k maximum
Shutdown Margin	0.44 %k
Number of control rods	3
Safety-Transient	1 1.40 %k pneumatic
Safety Shim	1 2.12 %k rack-pinion motor
Regulating	1 1.29 %k rack-pinion motor
Prompt negative temperature coefficient	≈ 0.11 %k/C
Delayed neutron fraction (β)	0.007
Neutron source	Americium-Beryllium 1.88 Ci
Reflector	Graphite, Water
Reactor cooling	Natural convection of pool water

Table 1-1 Principal Design Parameters (continued)

Pool tank	Aluminum 1/4 in thick (10) ft dia surrounded by 3 ft of concrete provides 20 ft of shielding water
Heat exchanger	Tube-Shell type
Pipes	3 in. aluminum
Coolant purification	Demineralizer, Filter
Experimental facilities	Rotary specimen rack Pneumatically operated rabbit Central thimble

ing experience, over 30,000 pulses, and more than 15,000 fuel years of operation. The safety arises from a large, prompt negative temperature coefficient that is characteristic of uranium-zirconium hydride fuel-moderator elements used in TRIGA systems. As the fuel temperature increases, this coefficient immediately compensates for reactivity insertions. The result is that reactor power excursions are terminated quickly and safely.

The prompt shutdown mechanism has been demonstrated extensively in many thousands of transient tests performed on two prototype TRIGA reactors at the GA Technologies laboratory in San Diego, California, as well as other pulsing TRIGA reactors in operation. These tests included step reactivity insertions as large as 3.5 %k with resulting peak reactor powers up to 8400 MW(t) on TRIGA cores containing similar fuel elements as are used in this TRIGA reactor.

Because the reactor fuel is similar, the previously cited experience and tests apply to this TRIGA system. As a result, it has been possible to use accepted safety analysis techniques applied to other TRIGA facilities to update evaluations with regard to the characteristics of this facility [1-8].

1.3 CONCLUSIONS

Past experience has shown that TRIGA systems can be designed, constructed, and safely operated in the steady state and pulsing modes of operation. This history of safety and the conservative design of the reactor have permitted TRIGA systems to be sited in urban areas using buildings without pressure type containment.

Several abnormal or accident conditions were analyzed (see section 7). A step insertion of the maximum excess reactivity and a complete loss of coolant water were analyzed, and in both cases fuel and clad temperatures remain at levels below those required to generate stress conditions which would cause loss of clad integrity. Failure of a fuel element clad and release of fission products into air was also analyzed, and it was shown that such a failure will not cause excessive radiation exposures to operating personnel. Also it was found that loss of pool water will not cause excessive radiation exposure to operating personnel. Production of argon-14 and nitrogen-16 during normal operation of the reactor will not present any hazard to persons in the reactor room or to the general public.

Results of this safety analysis indicate that the TRIGA Mark I reactor system proposed for construction and operation will pose no health or safety problem to the public during normal operations or during abnormal conditions.

REFERENCES

1. "Hazards Report for TRIGA Mark II Pulsing Reactor", General Atomic Division Report GA-1998, February 1961.

2. "Hazards Summary Report for a TRIGA-I Nuclear Reactor", University of Texas Bureau of Engineering Research, October 1961.

3. "Safeguards Analysis Report for TRIGA Reactors using Aluminum-clad Fuel", General Atomic Division Report GA-7860, March 1967.

4. "Safety Analysis Report for a 250 kilowatt Operation of a TRIGA Mark I Nuclear Reactor", University of Texas, College of Engineering, August 1967.

5. "Safety Analysis Report for the TRIGA Mark II Reactor", E-117-478, General Atomic Company, October 1975.

6. "TRIGA Mark I Safety Analysis Report", University of Texas, January 1981.

7. "TRIGA Mark I Safety Analysis Report", Michigan State University, June 1984.

8. "Safety Analysis Report, TRIGA Reactor Facility, Nuclear Engineering Teaching Laboratory", The University of Texas at Austin, November, 1984.

2. SITE DESCRIPTION

2.1 GENERAL LOCATION AND AREA

The reactor facility is to be located in a new building (Center for Energy Studies) scheduled to be constructed on the northeast corner of the Arkansas Tech University (ATU) campus. The physical plant of ATU currently includes 61 buildings located on a tract of 500 acres near the northern boundary of the city of Russellville, Arkansas in southwestern Pope County.

Russellville is situated between the mountains of the Ozark National Forest to the north and the mountains of the Ouachita National Forest to the south. It is approximately midway between the state's two largest population centers, Fort Smith, 85 miles to the west, and Little Rock, 75 miles to the east. Interstate Highway 40 (a major East-West artery) passes just over one-half mile north of the ATU campus and connects these two cities. Arkansas Highway 7 (a state North-South highway) passes through the ATU campus and adjacent to the proposed site of the reactor facility.

The Arkansas River runs south of Russellville and forms the southern boundary of Pope County. It is approximately 4 miles south-southwest of the ATU campus at its closest point. The Dardanelle Lock and Dam on the Arkansas River created Lake Dardanelle, a 36,000 acre lake, which is a major recreational attraction in the Russellville area. Lake Dardanelle borders the west edge of the ATU campus and some of the water and shoreline areas have been assigned by the U.S. Corps of Engineers to ATU for use by several of the academic departments.

Russellville is located on the Missouri-Pacific Railroad's main line which is part of the Union Pacific system. The rail line is located approximately one-half mile south of the ATU campus.

The nearest airport is Russellville Municipal Airport, located approximately 3 1/2 miles southeast of the ATU campus, which can accommodate small jets (4,450 ft runaway). There are no major airports with a control tower within 50 miles of the ATU campus.

Arkansas Nuclear One, Units 1 and 2, built by Arkansas Power and Light Company, is located approximately 6 miles west-northwest of the ATU campus. It represents one of the largest employers for Russellville-area residents and is a frequent user of the ATU educational facilities. Additional data about the Russellville area can be found in the Safety Analysis Reports for Arkansas Nuclear One, Units 1 and 2 [1,2].

The area surrounding the ATU campus can be generally described as mixed commercial and residential. The city of Russellville is due south of the campus, Lake Dardanelle and associated state parks are to the west, Interstate Highway 40 and mixed commercial properties are to the north, and primarily rural areas are to the east. A map of the ATU campus is shown in Figure 2-1, a map of the area around Russellville is shown in Figure 2-2, and a map of Arkansas is shown in Figure 2-3.

2.2 POPULATION AND EMPLOYMENT

Russellville is a growing industrial, financial, medical, educational, recreational and retail center of the Arkansas River Valley. It is approximately midway between the state's two largest population centers, Fort Smith, 85 miles to the west, and Little Rock, 75 miles to the east. Many of the people in the local labor force are employed in such areas as frozen food preparation, poultry processing, inner tube production, custom forging and shoe manufacturing. Other large segments of the local labor force are employed in the electric utility industry, primarily associated with Arkansas Nuclear One, and in the education field associated with Arkansas Tech University. Poultry, cattle, soybeans, cotton, and lumber are the principal money crops in the area.

In 1980 the population of Russellville was 14,031 and the population of Pope County was 39,021 [3]. The "urban population" of Pope County (defined as being all persons who live in places of 2,500 or more whether incorporated or not) was 43.7 percent, while the rural population was 56.3 percent [3]. Due to annexations by the city of Russellville through 1986, the most recent population of Russellville is listed as 17,650 [4].

The population density of Pope County was calculated to be 47.6 persons per square mile in 1980 [3] which was an increase from the 1970 population density of 35.2 persons per square mile [5]. The highest population density in Arkansas is 444.2 persons per square mile [3], in Pulaski County where Little Rock, the State Capitol, is located. The lowest population density in Arkansas is located in Newton County which is north of and adjacent to Pope County. The population density in

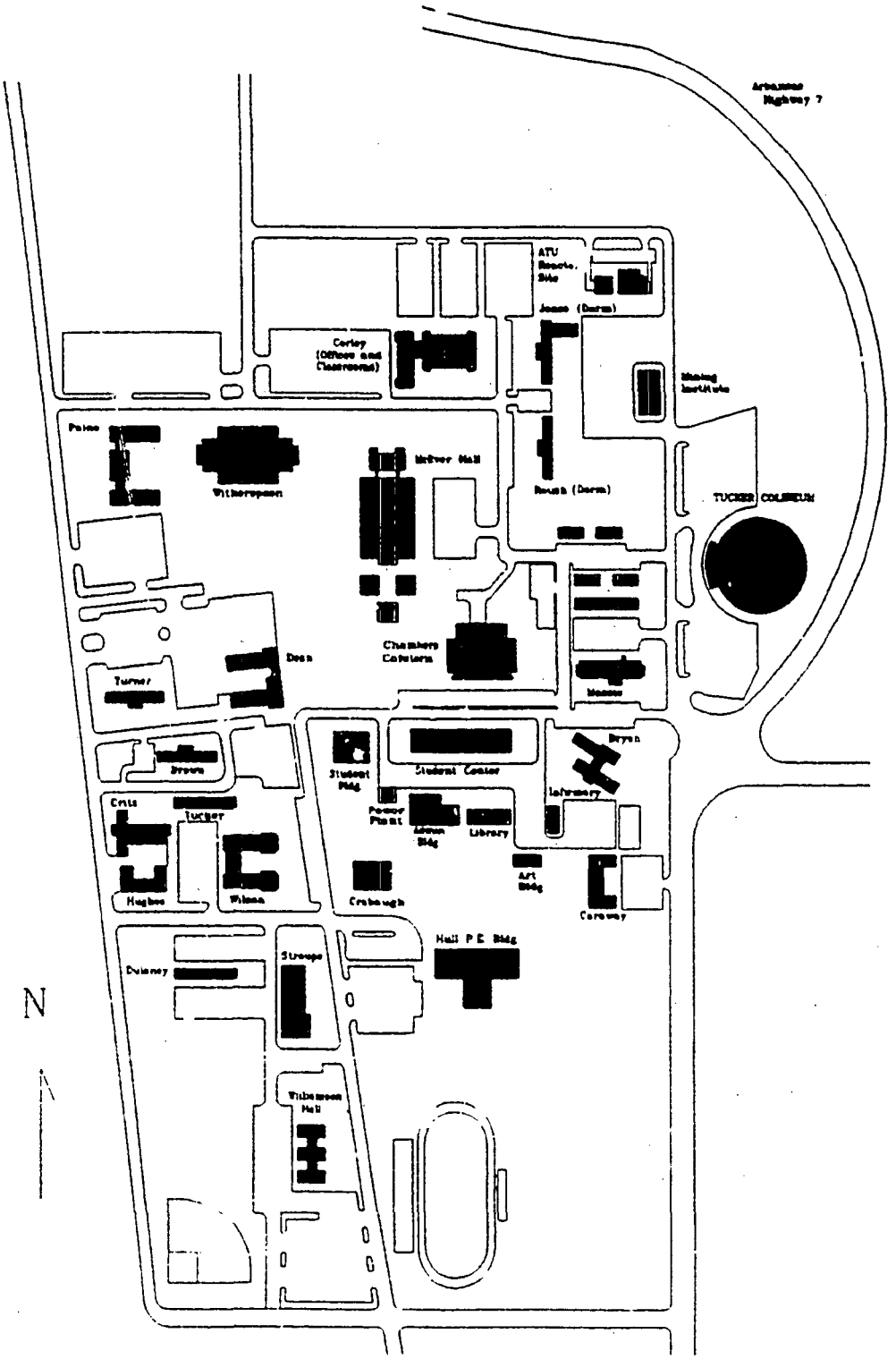

Figure 2-1. Campus Map of Arkansas Tech University

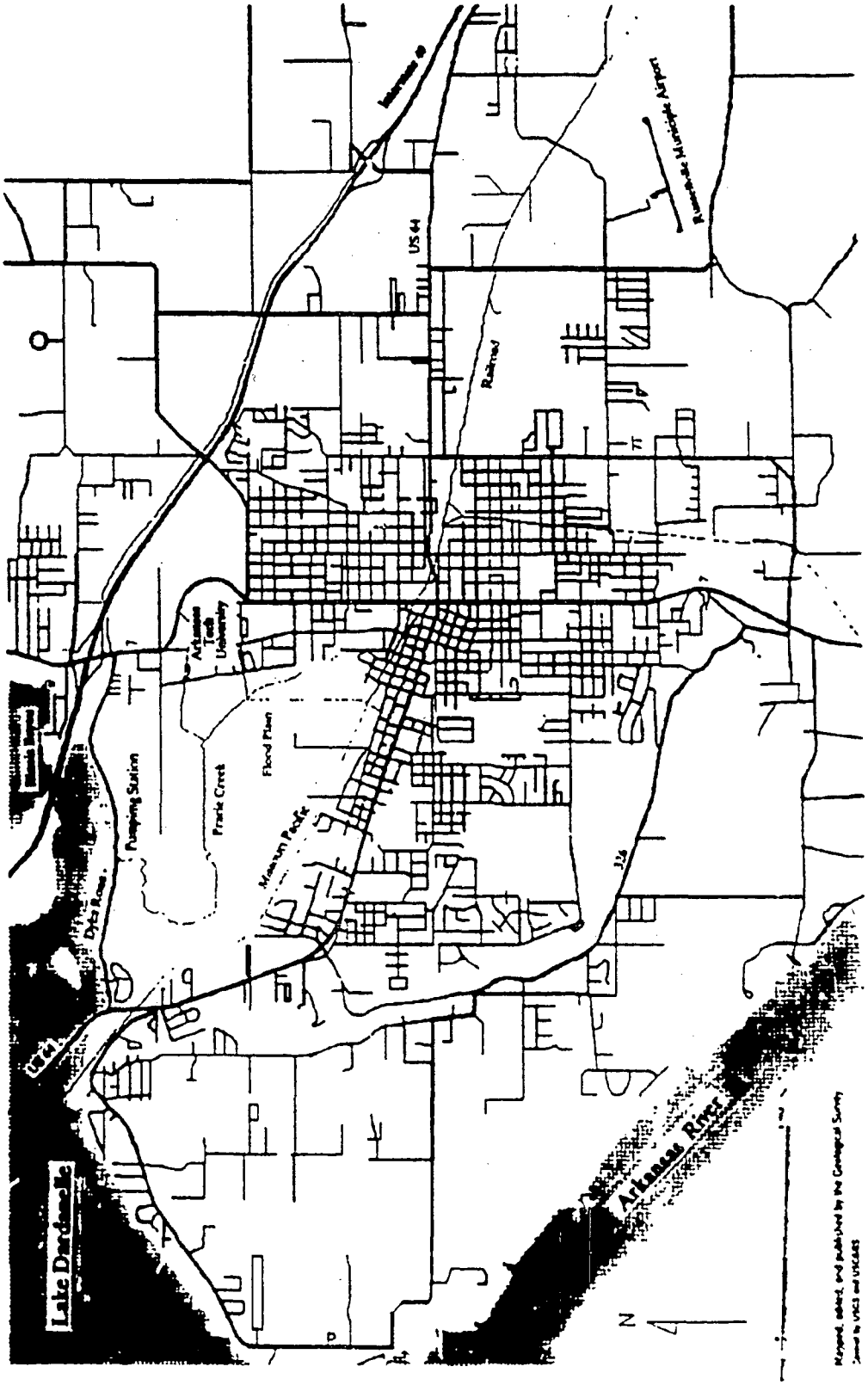

Figure 2-2 Russellville Area

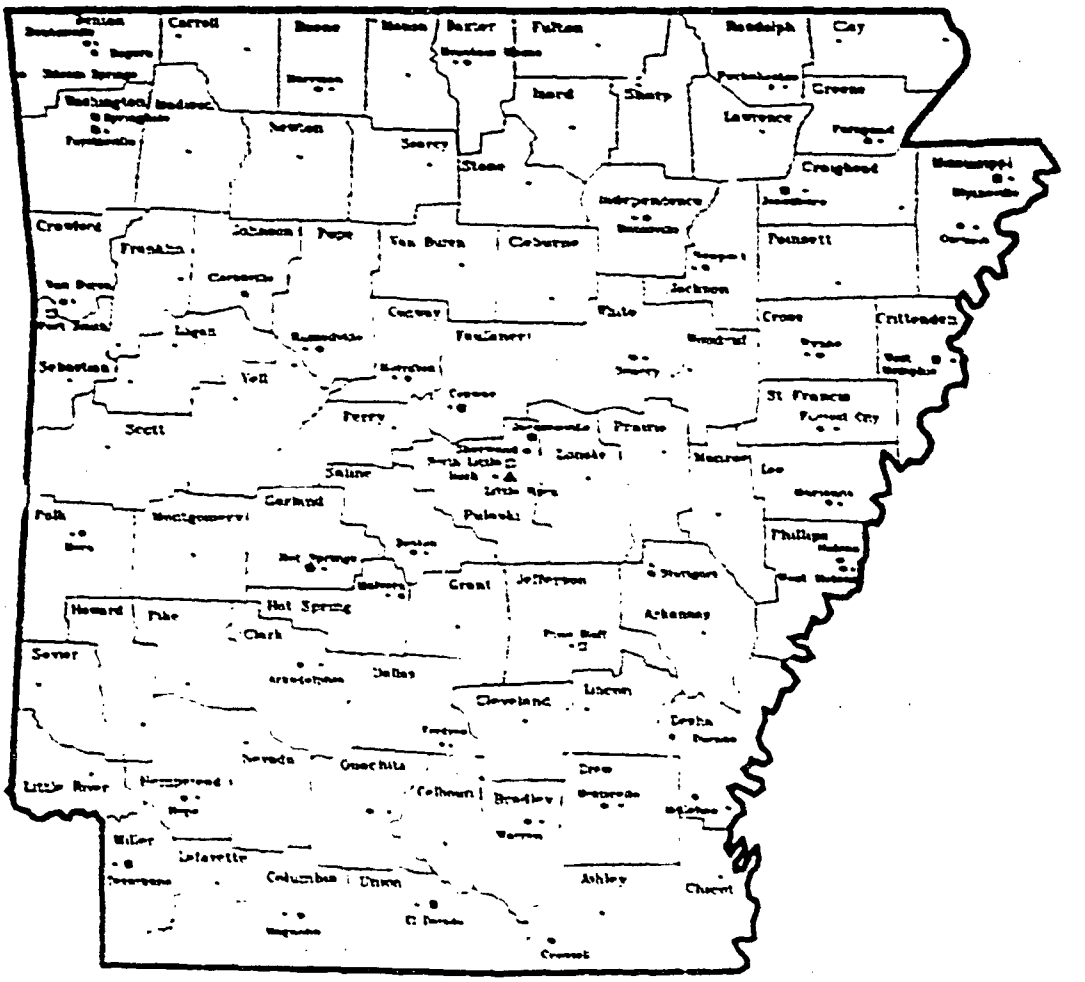

Figure 2-3 State of Arkansas

Newton County is 9.4 persons per square mile [3]. Figure 2-4 shows the population densities for all counties in Arkansas based on 1980 census data.

The city of Russellville had a net population gain of 19 percent during the decade from 1970 to 1980 compared to a 23 percent gain from 1960 to 1970 [3]. Pope County had a gain of 36 percent from 1970 to 1980 [3] compared to a 35 percent gain from 1960 to 1970 [5]. The 1990 population projection for Pope County is 45,197 (or a 1[illegible] percent gain from 1980 to 1990) and for 2000 the population projection is 51,7[illegible] (or a 14 percent gain from 1990 to 2000) as shown in Table 2-1 [6]. Figure 2-5 shows the percent change in population for all counties in Arkansas from 1970 to 1980.

The student population at ATU during the 1989 spring semester was approximately 3,500. The faculty and staff population is 377. The majority of students at ATU live off campus. The on campus student population is 820 [7].

Figure 2-6 shows the Russellville area census tract/block numbering areas used to collect census data, and the relative location of the ATUproposed reactor facility to these census tracts. Table 2-2 lists the resident population within each tract. Figure 2-1 shows the ATU campus and relative location of dormitories and classrooms to the proposed reactor facility site.

2.3 CLIMATOLOGY

Since the state of Arkansas has homogeneous climate conditions, the boundaries of the state may be used to delineate the general climatic region of the Russellville area. Arkansas experiences a continental type climate with large diurnal and seasonal variations in temperature. Because of the proximity to the Gulf of Mexico, there are occasional intrusions of maritime tropical air masses during all seasons, but most frequently in the summer. During fall, winter and spring, the weather conditions in Arkansas exhibit frequent wide variations due to synoptic scale events, such as cold frontal passages from the north and northwest, and the development of warm frontal activity or extra tropical cyclones in the Gulf of Mexico and the southern states. In the summer season, most of the weather variations are due to local showers and storms rather than to synoptic scale events. Tropical hurricanes moving north out of the Gulf of Mexico occasionally cause widespread rain in late summer or fall, but hurricane wind conditions are ameliorated before reaching the region [2].

Table 2-3 lists the climatological data for Russellville, including temperature and precipitation data from the U.S. Department of Commerce, Weather Bureau,

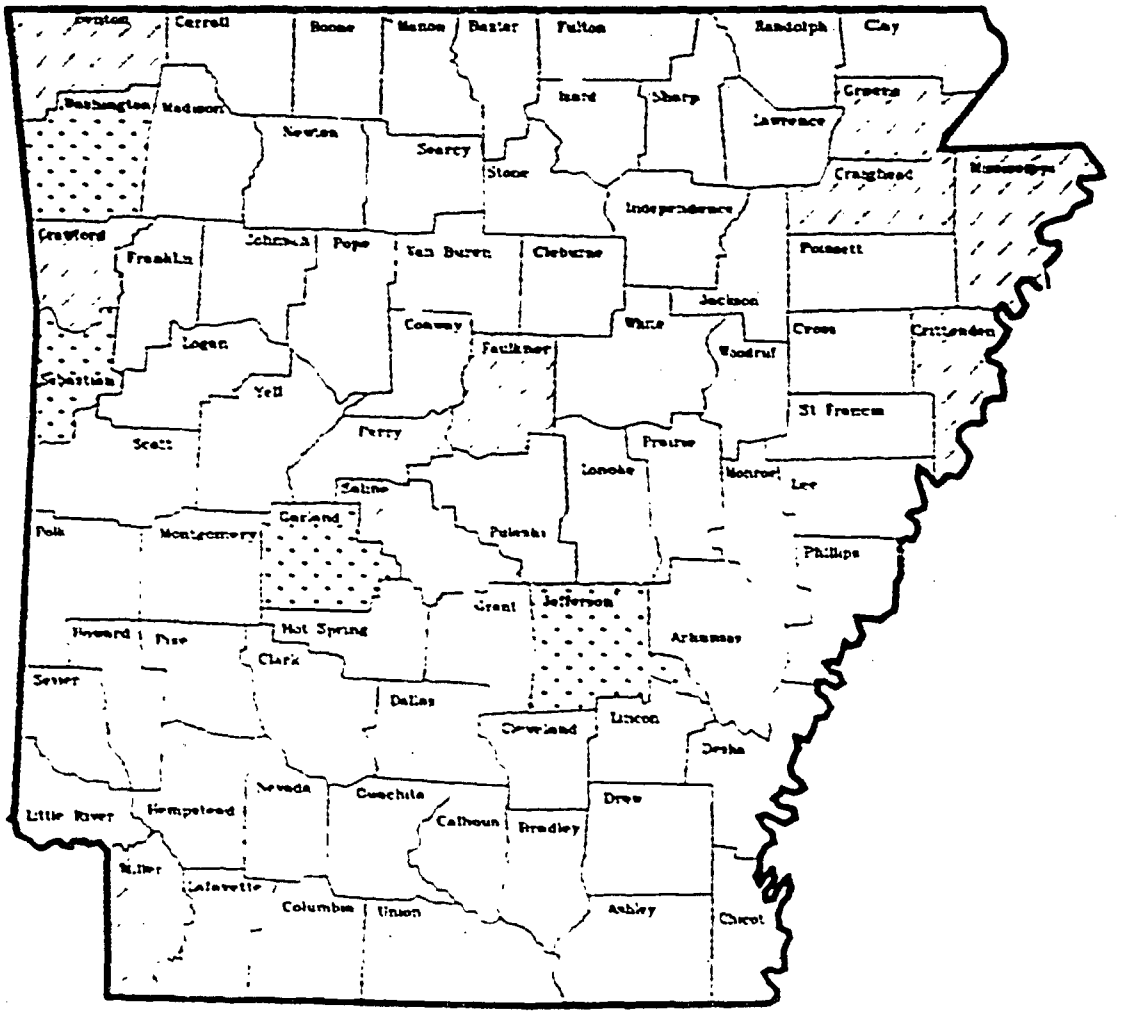

Population Per Square Mile

1 - 25

26 - 50

51 - 100

101 - 200

400 +

Figure 2-4 Population Density Per Square Mile of Land

Table 2-1 Pope County Data Summary

(Source: University of Arkansas at Little Rock, State Data Center/Small Business Development Center, Research and Public Service, Little Rock, AR)

	Census		Projection	
	1970	1980	1990	2000
POPULATION:	28,607	39,021	45,197	51,700
AGE GROUP:				
20-64 Yrs.	14,897	21,293	26,250	31,158
65 & Over	3,190	4,607	5,609	6,467

[Census of Population, General Population Characteristics, Arkansas 1970 and 1980. Estimates and projections prepared by Division of Demographic Research, Center for Research and Public Policy, University of Arkansas at Little Rock.]

TOTAL PERSONAL INCOME BY SOURCE (000s):	1986	Percent of Total
Earnings by Place of Work	$378,085	80.2
Farm	31,747	6.7
Manufacturing	79,324	16.8
Transportation & Utilities	60,250	12.8
Retail Trade	38,009	8.1
Finance, Ins. & Real Estate	8,642	1.8
Services	61,112	13.0
Government	46,544	9.9
Dividends, Interest & Rent	66,345	14.1
Transfer Payments	83,756	17.8
TOTAL PERSONAL INCOME	471,546	100.0
PER CAPITA PERSONAL INCOME	10,855	

[Census of Population, General Social and Economic Characteristics, Arkansas, 1980.Regional Economic Information System; Bureau of Economic Analysis; Washington D.C.; April, 1988. Note: Totals for "Earnings by Place of Work" and "Total Personal Income" include sources of income not shown in table.]

LABOR FORCE:	1987	Percent of Labor Force
Civilian Labor Force	23,075	100.0
Employment	21,550	93.4
Unemployment	1,525	6.6

["Revised Labor Force Statistics, Annual Averages, 1987", Arkansas Employment Security Division.]

Table 2-1 (continued)

BUSINESS CENSUSES:	1982
TOTAL RETAIL TRADE (000s)	$186,555
General Merchandise	22,920
Food Stores	40,117
Automotive Dealers	52,887
Gasoline Service Stations	11,612
Eating & Drinking Places	13,649

[1982 Census of Retail Trade, Arkansas]

TOTAL WHOLESALE SALES (000s)	83,168

[1982 Census of Wholesale Trade, Arkansas]

RECEIPTS FROM SERVICE INDUSTRIES:	
Total Receipts (000s)	$ 39,378
Motels & Hotels	5,769
Automotive Repair	1,794
Amusement	1,417
Health Services Except Hospitals	15,959
Legal Services	1,551

[1982 Census of Service Industries, Arkansas]

EDUCATION:	1980
YEARS OF SCHOOLS COMPLETED BY POPULATION 18 YEARS AND OVER:	
Percent Completing 4 Yrs of High School	61.4
Percent Completing 4 Yrs of College	10.5

[Census of Population and Housing, Summary Tape File 3-A, Arkansas, 1980]

LARGEST MANUFACTURERS:

Name	Product
ConAgra Frozen Foods	Frozen dinners
Tyson Foods, Inc.	Poultry processing
Firestone Tire & Rubber	Inner tubes
Ladish Co.	Custom forgings
Frolic Footwear	Men's shoes

[Unpublished data, Arkansas Industrial Development Commission)

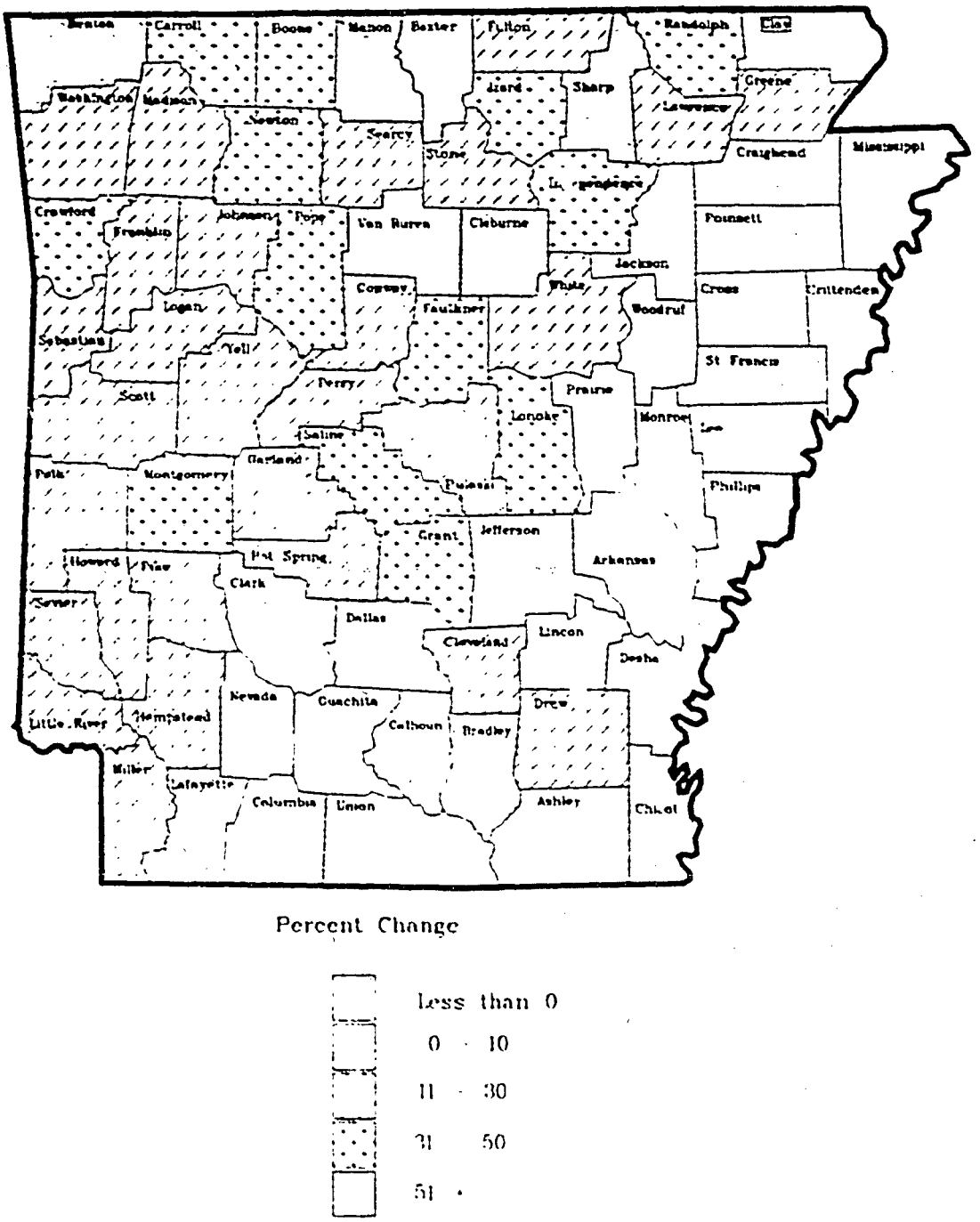

Percent Change

- Less than 0
- 0 - 10
- 11 - 30
- 31 - 50
- 51 +

Figure 2-5 Percent Change in Population 1970 to 1980

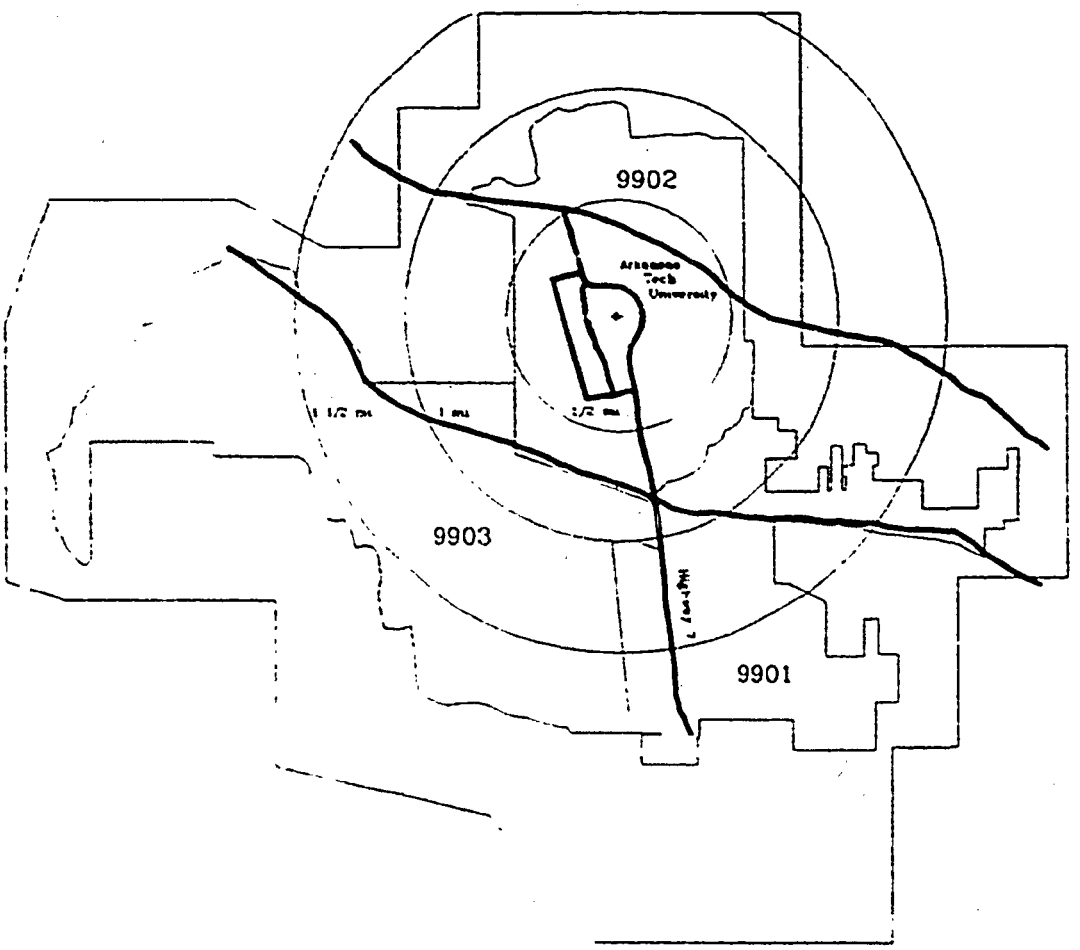

Figure 2-6 Census Tract Map of Russellville

Table 2-2 Vicinity of Russellville Block Numbering Areas and Populations

Tract/Block Numbering Area	Total Population
BNA 9901	4,875
BNA 9902	4,868
BNA 9903	6,117

NOTE: The Block Numbering Areas (BNAs) include boundaries beyond the Russellville city limits and therefore do not compare directly to the Russellville city population census numbers.

SOURCE: Census of Population and Housing, 1980 - P.L. 94-171 Counts, Pope County, Arkansas (State Data Center, UALR)

Washington, D.C. [2]. The annual mean daily temperature at Russellville is 73 F; minimum is 49.4 F. The highest temperature on record is 113 F and the lowest is -15 F. Russellville has 93 annual mean number of days with temperatures equal to or greater than 90 F and 74 days equal to or less than 32 F [5].

The estimated annual mean precipitation for Russellville is 49 inches [2] and the annual precipitation extremes range from approximately 23 inches to about 80 inches [5]. The snow and sleet season runs from November through March with an annual mean of 5.7 inches [2].

Figure 2-7 shows the January mean temperature for the state of Arkansas, Figure 2-8 shows the July mean temperature, and Figure 2-9 shows the mean annual precipitation [3].

In the one degree latitude-longitude square including the city of Russellville, wind storms with vind speeds 50 knots or greater have been reported about once a year [2]. The prevailing wind direction is from the east, with a secondary maximum, almost as large, from the east-northeast. The annual mean speed is 5.86 mph and the percentage of calm is 1.6 percent [2]. Wind direction and speed data collected at nearby Arkansas Nuclear One are listed in Table 2-4.

Table 2-5 provides the monthly and seasonal distribution of tornado occurrence for Arkansas. An analysis was performed for the Arkansas Nuclear One site to determine the probability of a tornado hitting the site in any given year. The value calculated was 0.00137 with a return frequency of once every 730 years [2]. Since the ATU campus and the city of Russellville are located within the 3900

Table 2-3 Climatological Data for Russellville, Arkansas

TEMPERATURES [2]

Month	Average Daily Maximum	Extreme Maximum	Average Daily Minimum	Extreme Minimum
	DEGREES FAHRENHEIT			
January	51.2	82	29.8	-11
February	53.6	87	31.3	-15
March	64.1	95	40.2	7
April	74.0	96	49.7	25
May	81.7	100	58.1	32
June	89.3	107	66.5	37
July	93.2	113	66.5	49
August	92.7	113	68.5	46
September	86.6	110	61.2	32
October	75.9	98	48.5	23
November	62.7	88	37.7	12
December	52.5	86	31.7	0
ANNUAL	73.1	113	49.4	-15

PRECIPITATION [2]

Month	Normal Inches	No. of Days 0.5 In.	Extremes of Precipitation (Inches)
January	3.99	2	12.81
February	3.86	3	10.20
March	4.76	3	16.05
April	4.87	4	12.45
May	5.70	3	11.34
June	4.25	3	8.97
July	4.06	3	9.62
August	3.55	2	12.58
September	3.63	2	8.01
October	3.11	2	11.13
November	3.98	3	10.94
December	3.40	2	7.52
ANNUAL	49.16	32	16.05

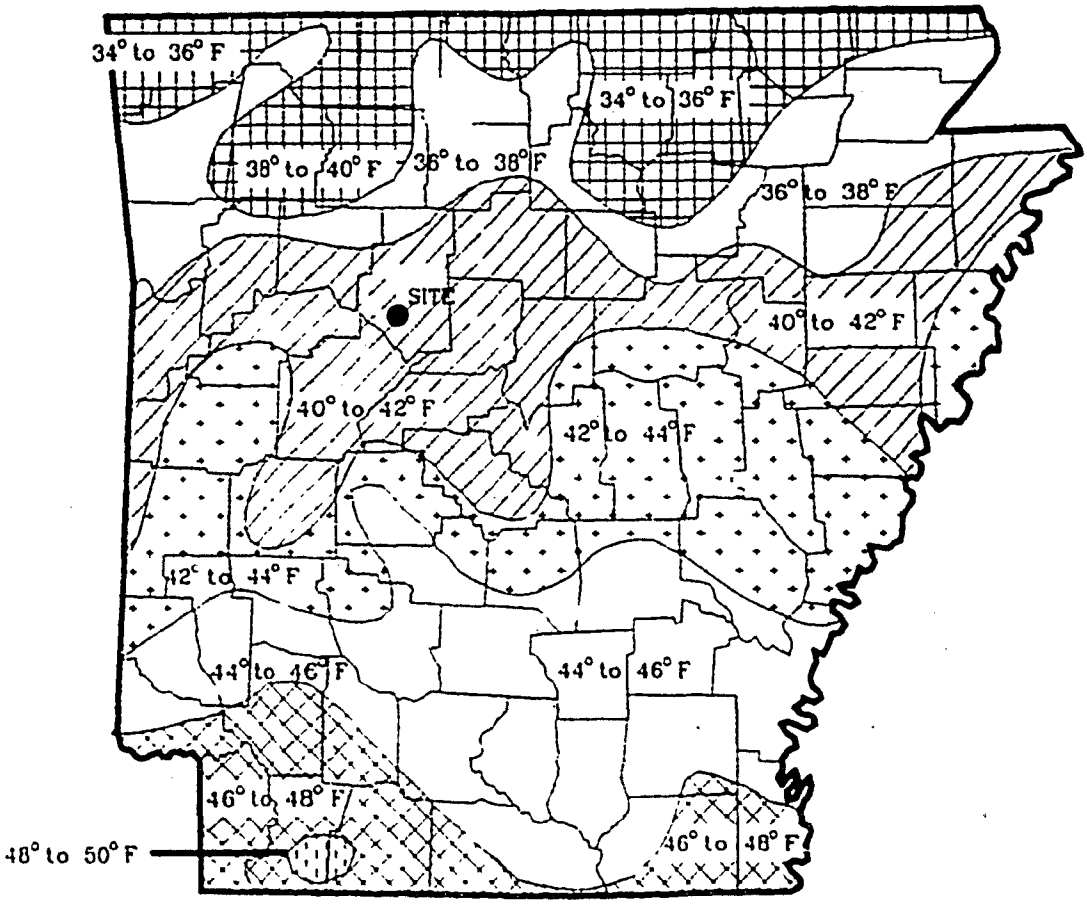

Figure 2-7 Mean Temperature January

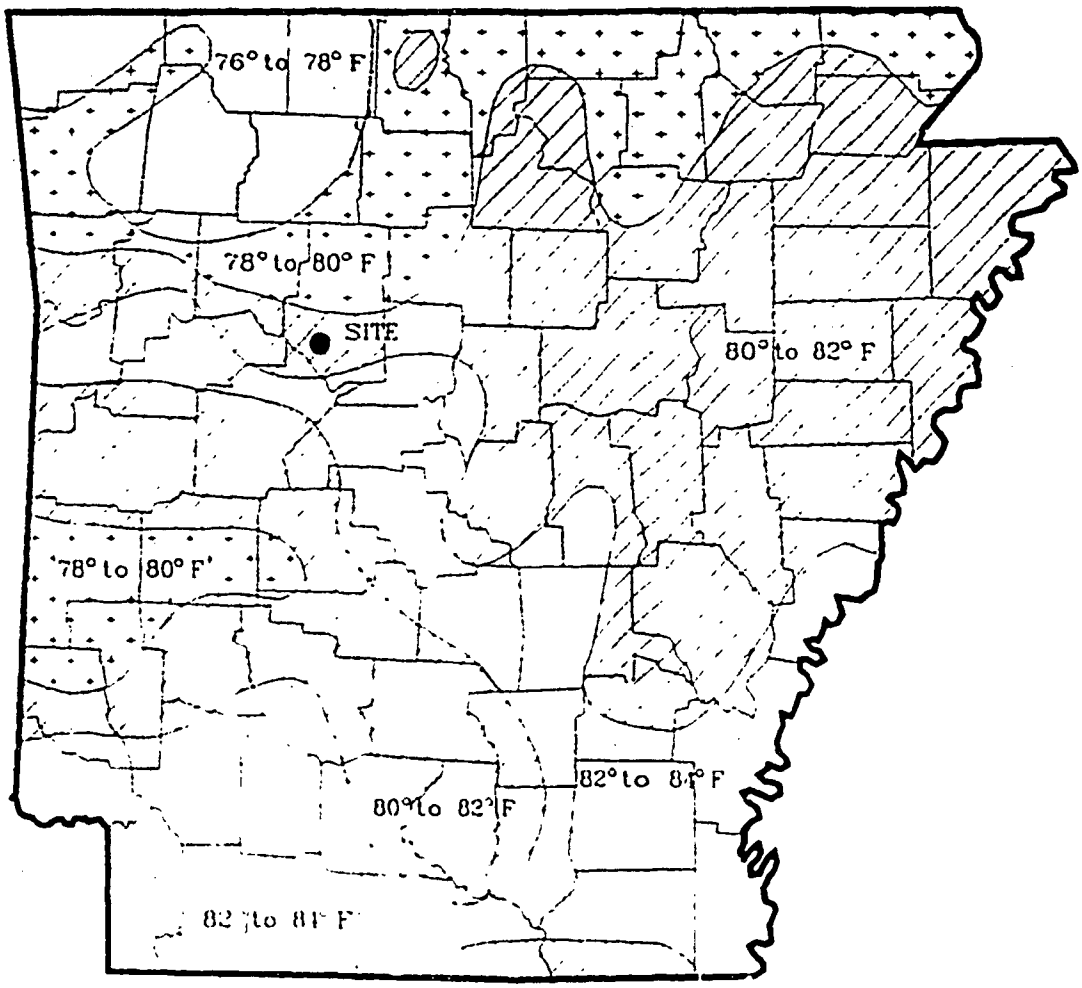

Figure 2-3 Mean Temperature July

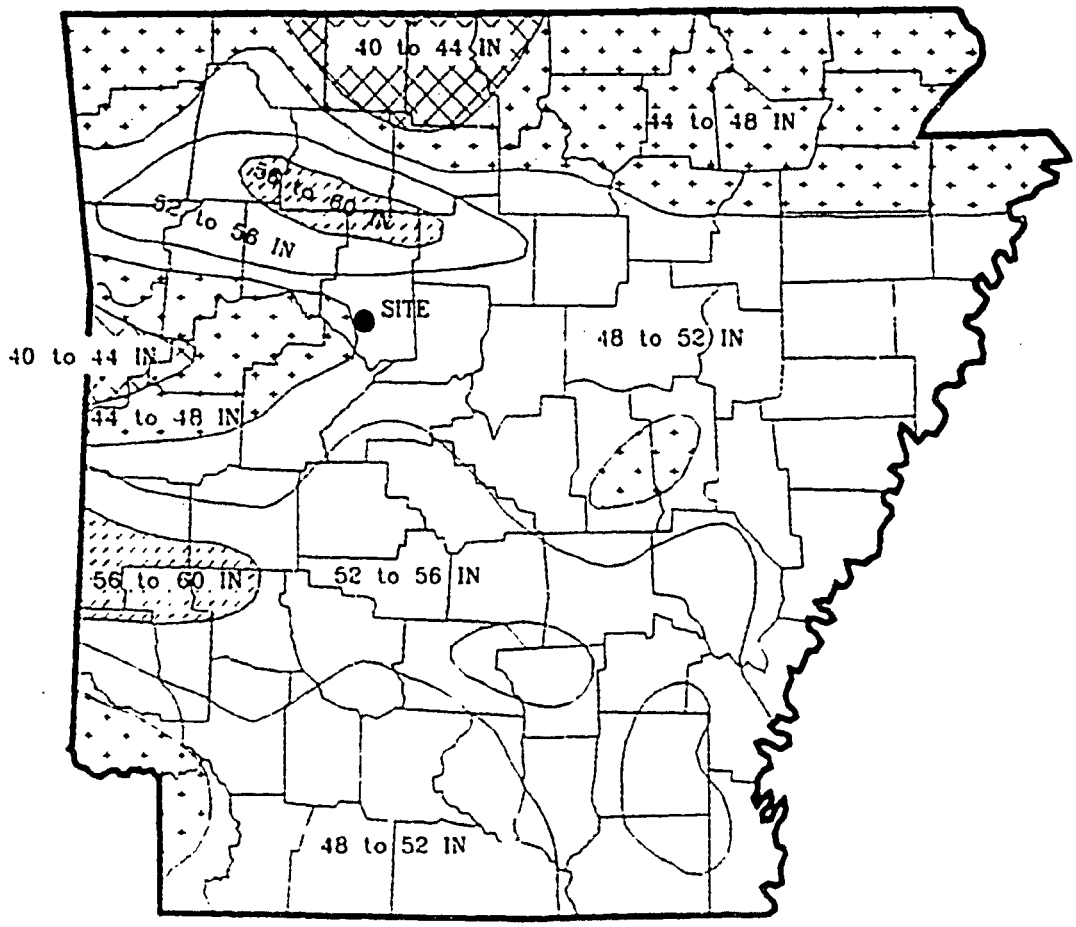

Figure 2-9 Mean Annual Precipitation

Table 2-4 Relative Frequencies of Annual 40-Foot Wind Direction and Speed (Collected at Arkansas Nuclear One, February 7, 1972 to February 7, 1973)

SECTOR	UPPER CLASS INTERVALS OF WIND SPEED (MPH) 1	2	3	4	5	6	7	8	9	10	11	>11	TOTAL	MEAN SPEED
NNE	.6	.8	.7	.6	.4	.6	.4	.2	.1	.0	.0	.0	4.47	4.17
NE	.9	1.9	2.0	1.4	.8	.6	.4	.3	.1	.2	.0	.0	8.60	3.79
ENE	.9	1.7	2.2	2.3	1.9	1.4	.9	.7	.6	.3	.2	.5	13.67	4.92
E	.6	1.3	2.1	2.1	1.9	1.9	1.2	.9	1.0	1.0	.7	1.2	15.88	6.10
ESE	.3	.5	.9	1.3	1.6	1.1	.9	.8	.3	.3	.3	.8	9.08	6.17
SE	.2	.3	.6	1.0	1.3	.9	.7	.5	.3	.2	.1	.0	6.06	5.5
SSE	.1	.2	.3	.6	.8	.7	.5	.4	.3	.1	.0	.0	4.03	5.74
S	.2	.2	.3	.4	.6	.4	.3	.2	.1	.1	.2	.2	3.22	6.10
SSW	.2	.2	.3	.3	.3	.2	.3	.2	.2	.2	.1	.3	2.67	6.64
SW	.1	.2	.3	.3	.3	.3	.2	.2	.1	.1	.1	.3	2.25	6.72
WSW	.3	.5	.5	.4	.4	.5	.4	.4	.2	.2	.2	.9	4.89	7.01
W	.5	.7	.5	.6	.7	.7	.9	.8	.9	.6	.6	1.6	9.03	7.60
WNW	.5	.5	.6	.5	.5	.7	.4	.4	.5	.3	.4	2.1	7.31	8.28
NW	.2	.3	.2	.3	.2	.2	.2	.2	.2	.2	.0	.5	2.69	7.36
NNW	.3	.3	.3	.1	.2	.1	.1	.1	.1	.0	.1	.2	1.92	5.21
N	.3	.4	.4	.4	.3	.3	.1	.1	.1	.1	.0	.0	2.63	4.47
CALM													1.60	
TOTAL	6.2	9.7	11.9	12.7	12.1	10.6	7.9	6.5	5.2	4.0	2.9	8.8	100.00	5.86

NUMBER OF INVALID OBSERVATIONS = 466

Table 2-5 Monthly and Seasonal Distribution of Tornado Occurrence for Arkansas (1955 - 1967) [2]

	Number of Occurrences	Mean Frequency of Occurrence
January	13	1.0
February	34	2.6
March	38	2.9
April	50	3.8
May	67	5.2
June	19	1.5
July	11	0.8
August	7	0.5
September	7	0.5
October	5	0.4
November	21	1.6
December	5	0.4
Season		
Spring (MAM)	155	11.9
Summer (JJA)	37	2.8
Autumn (SON)	33	2.5
Winter (DJF)	52	4.0

square mile boundary of the calculation, the tornado probability would also apply to the ATU reactor facility.

2.4 GEOLOGY

Russellville is situated in the center of the Arkansas Valley section of the Ouachita physiographic province (Figure 2-10). The Arkansas Valley is a gently rolling east-west plain or lowland 25 to 35 miles wide that extends from near Searcy westward beyond Fort Smith. Many long, sharp ridges and several broad-topped hills rise above the general level of the valley. In most parts of the valley the topography is an expression of the east-west trending structure. Broad, open synclines are expressed by high, flat-topped mountains; steeply tilted limbs of anticlines and synclines are generally expressed by sharp ridges, some of which are miles long [2].

Sedimentary rocks of the Pennsylvanian System and unlithified sediments of the Quanternary System crop out in the Russellville area. The Pennsylvanian rocks consist of (1) the Atoka Formation, which is mostly shale but which also contains sandstone and shale; (2) the Hartshorne Sandstone; and (3) the McAlester Forma-

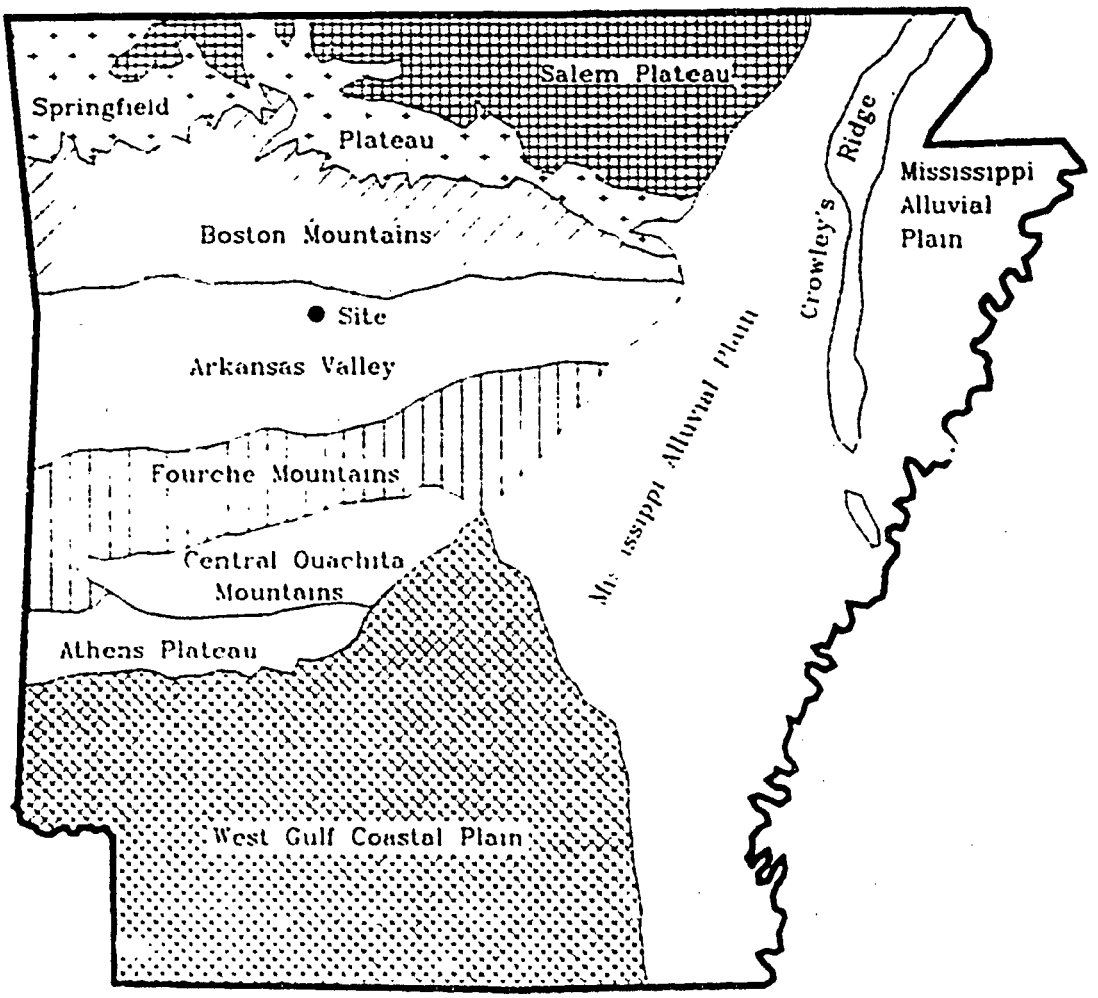

Figure 2-10 Physiographic Regions

tion, which is mostly shale but which contains siltstone in the Russellville area. The Quanternary deposits consist of terrance alluvium deposited during the Pleistocene Epoch and flood plain alluvium of recent age. [5]

As shown in Figure 2-11, the ATU campus and the city of Russellville lie on the upper portion of the Atoka Formation which crops out in the Russellville area. The base of the Atoka is not exposed; therefore the Atoka ranks as the oldest bedrock in the area. The formation probably is about 6,000 feet thick in the Russellville area [5].

The nature of the structural features of the Arkansas Valley and their relation to the structure of the adjacent Ouachita (to the south) and Boston Mountains (to the north), show that the dominant force in the production of those features was horizontal pressure exerted from the south. The folding and thrust faulting were the product of the Ouachita orogeny on Middle Pennsylvanian time (290 - 300 million years ago). The normal faults were also connected with this episode of deformation. The folds and faults of the Arkansas Valley cannot be precisely dated, but it is known that they are very old geologic structures and probably were formed during the Ouachita orogeny and immediately thereafter due to the relaxation of compressive stress [11].

The nearest faults to the Russellville area are the Prairie View fault, and the London fault and its branch faults (see Figure 2-11). The last movement of these faults occurred prior to Cretaceous time, or over 135 million years ago [2].

2.5 HYDROLOGY

The ATU campus is located adjacent to Prairie Creek which is the watershed for the campus area and for a large portion of the city of Russellville. The natural mouth of Prairie Creek is blocked by the Russellville Dike which was built to protect the city of Russellville from combined overflows from Dardanelle Lake and the Illinois Bayou. All streamflow from Prairie Creek is now pumped under the dike by the Corps of Engineers built pumping station with a capacity of 150,000 gpm. A large sump area is adjacent to the dike and stores floodwater when the capacity of the pumping station is exceeded [8].

Based on data from the Corps of Engineers on flood plain information for Russellville, the worst expected 100 year flood (i.e., the "Intermediate Regional Flood") for the ATU campus would be up to elevation 334 ft, MSL, while the extremely rare flood (i.e., the "Standard Project Flood") would be up to 338 ft. Although portions of the ATU campus are below these elevations, primarily on the

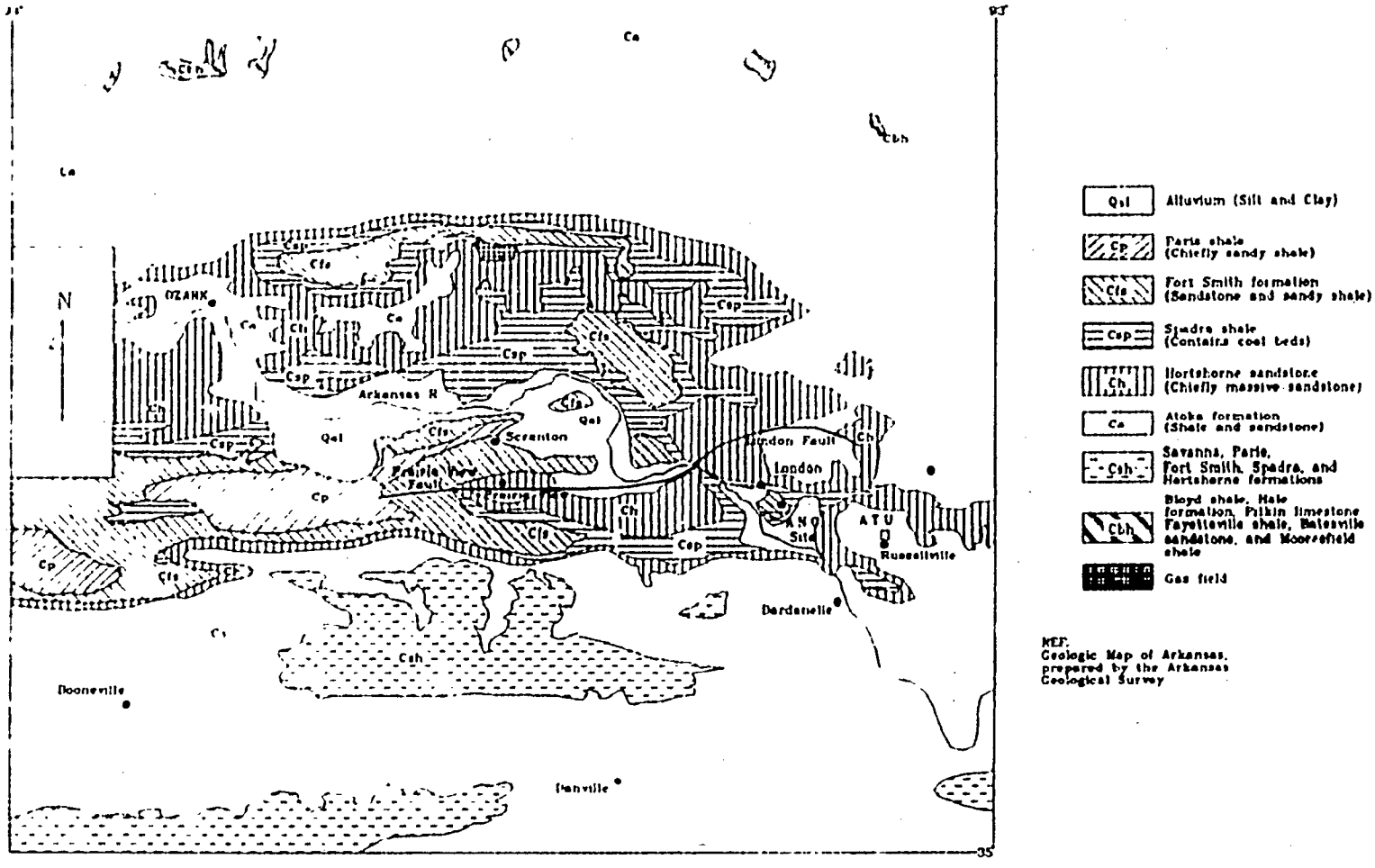

Figure 2-11 Regional Geologic Map

west side of the campus, the area of the proposed site for the ATU reactor facility is approximately at elevation 348 ft, or approximately 10 feet above the worst expected flood level of 338 ft. Figure 2-12 shows the areas of potential flooding based on the Corps of Engineers' study, and Figure 2-13 shows the high water profile for Prairie Creek.

The most severe flood reported for the ATU campus area in the Corps of Engineers' report [8] occurred in August 1957 and reached approximately up to 334 ft at the campus location (see Figure 2-13). Another severe flood occurred in December 1982 and reached a depth of just under 335 ft based on observed flood water depth relative to the ATU buildings on the west side of the campus [9]. Therefore, based on both historical data and the Corps of Engineers' study results, no significant general site flooding at the proposed ATU reactor facility is anticipated.

From test boring data for the Tucker Coliseum located near the proposed site of the reactor facility (see Figure 2-14), permanent ground water exists at depths greater than the 20 ft depth explored by the borings. However, some perched water exists in the clayey silt and organic silts in the upper 2 ft during wet seasons of the year and in localized seams in the shale strata [10].

The surface drainage from the proposed reactor facility site is into Prairie Creek, which ultimately is pumped into Dardanelle Lake as discussed previously. The source of local city water is the Illinois Bayou, north of Dardanelle Lake, which also feeds into Dardanelle Lake. However, the water from Prairie Creek discharges into Dardanelle Lake at a point downstream of the city water supply from the Illinois Bayou such that it is not used for human consumption.

2.6 SEISMOLOGY

An evaluation of the seismic activity of the Russellville area was required by the Atomic Energy Commission prior to the construction of Arkansas Power and Light Company's Arkansas Nuclear One, which is located approximately 6 miles west-northwest of the ATU campus. Therefore, the seismic evaluation of the Arkansas Nuclear One site can be applied directly to the evaluation of the seismicity of the ATU reactor facility site.

The Arkansas Nuclear One seismic evaluation noted that the generally good foundation conditions and general quiescence of the area permitted the selection of a low earthquake intensity. However, considering that the epicenter of the large New Madrid earthquake of 1811 and 1812 is only 220 miles from the Russellville

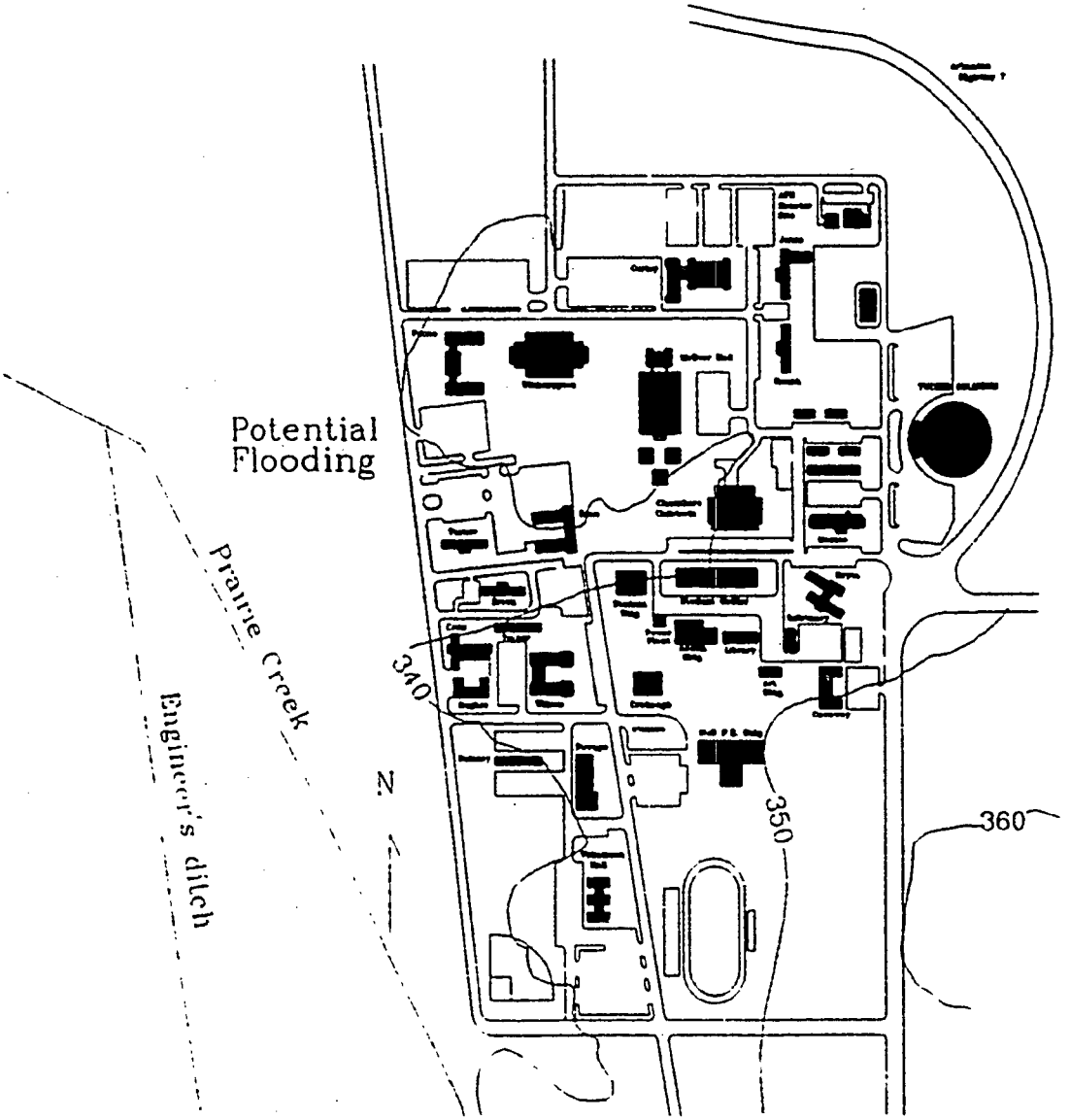

Figure 2-12 Areas of Potential Flooding Near Prairie Creek [8] (Corps of Engineers, Plate 29, Feb. 1969)

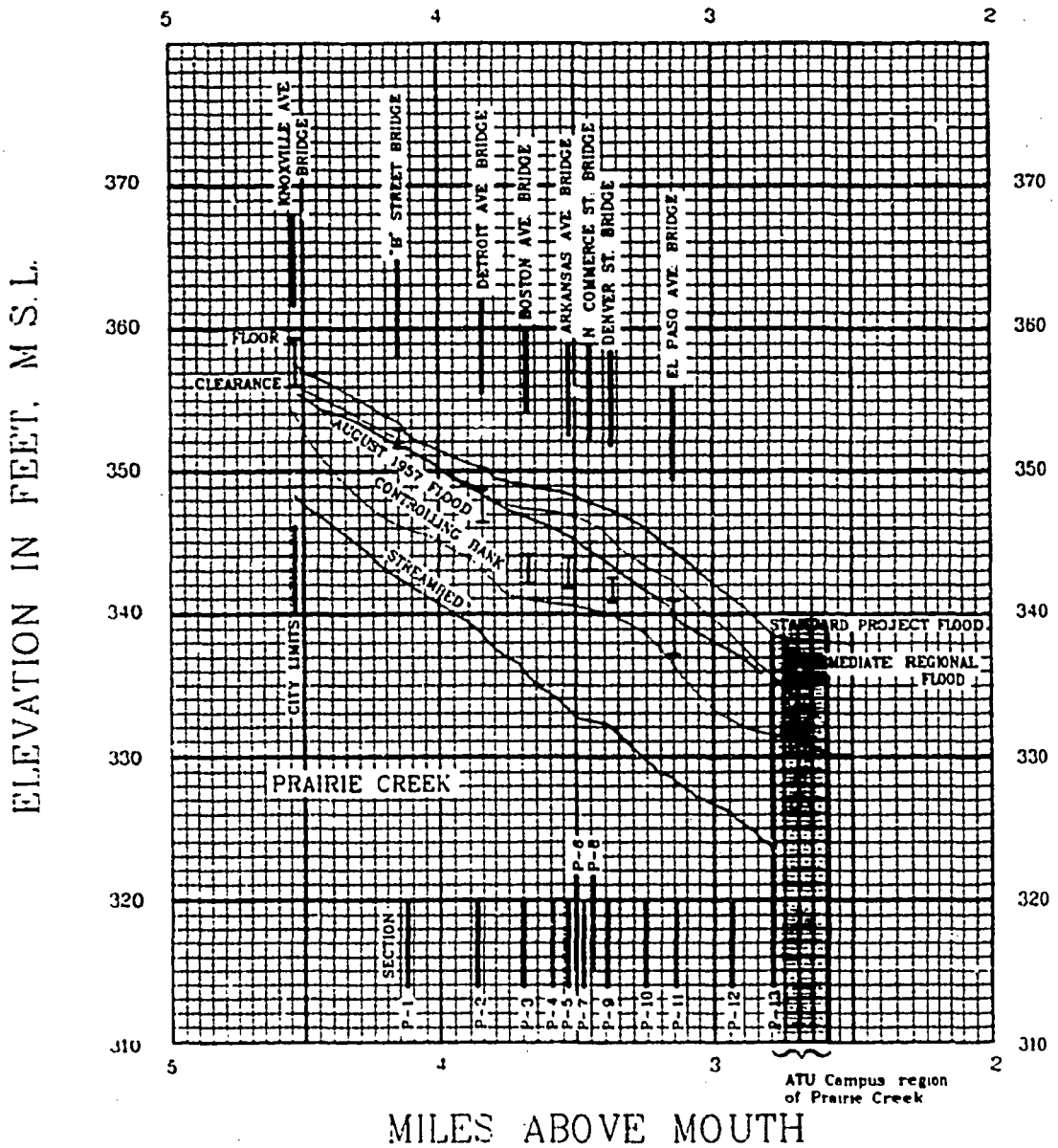

Figure 2-13 High Water Profile for Prairie Creek [8] (Corps of Engineers, Plate 32, Feb. 1969)

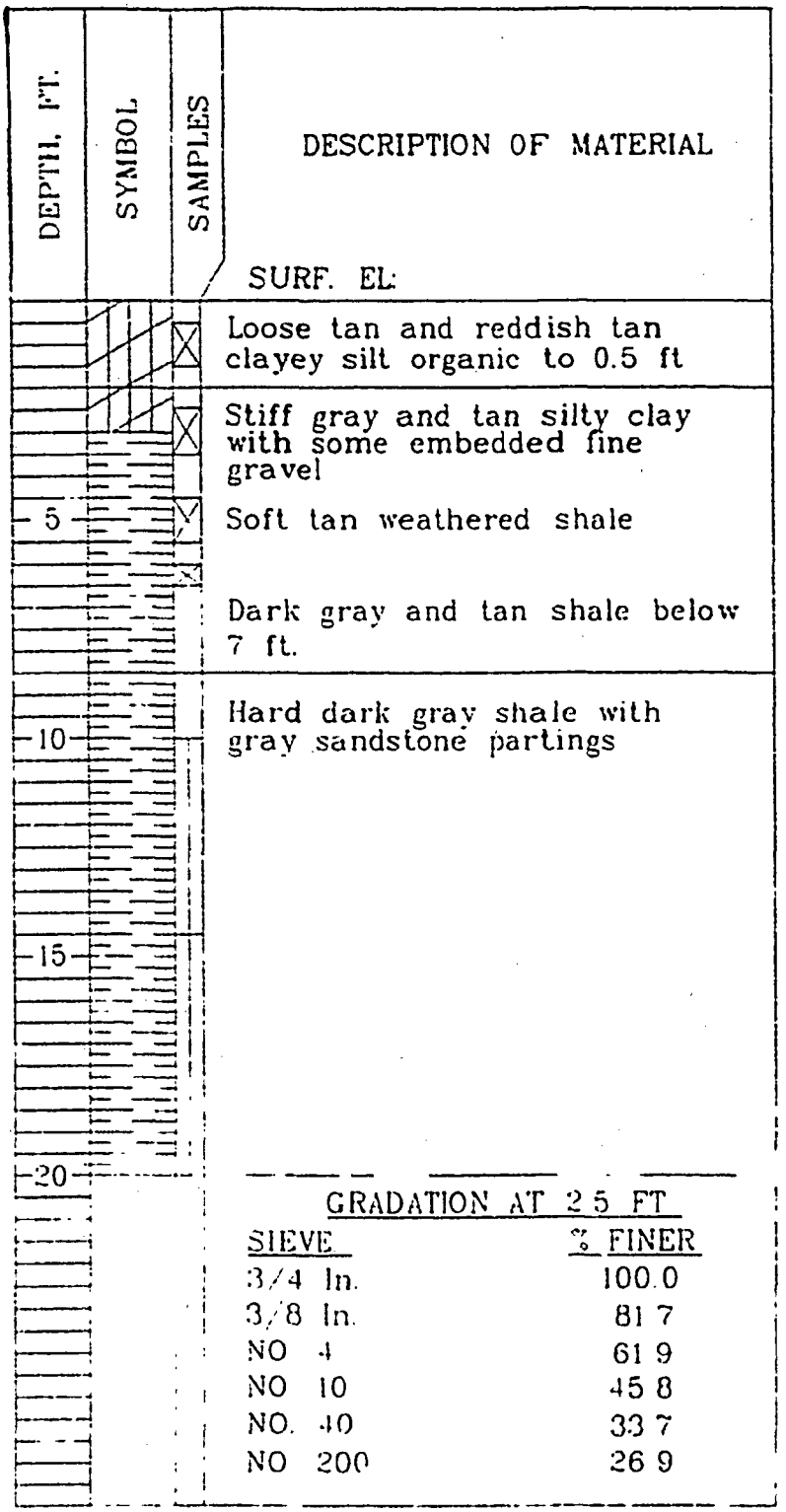

Figure 2-14 Log of Boring (No. 1) for Tucker Coliseum Construction, Dated 12/13/73, ATU Campus

area, a maximum intensity of VII (Modified Mercalli Scale) was determined to be within reasonable probability [3].

Locations in Arkansas where earthquakes that occurred between 1843 and 1952 were felt are shown in Figure 2-15. These earthquakes probably were also felt in the Russellville area.

The seismic risk map shown in Figure 2-16 (prepared by Dr. S.T. Algermissen, et. al., of the U.S. Coast and Geodetic Survey, January 1969) shows the Russellville area lies within Zone 1 where minor damage may occur due to seismic activity. Zone 1 corresponds to intensities of V and VI on the Modified Mercalli Scale [2].

The maximum predicted earthquake intensity map (prepared by the U.S. Geological Survey, June 1986), shown in Figure 2-17, identifies Pope County to be in a maximum intensity zone of VII bordering on a zone of VI (Modified Mercalli Scale). This further reinforces the conclusions in the Arkansas Nuclear One safety analysis [2] that Russellville is in a low earthquake intensity region.

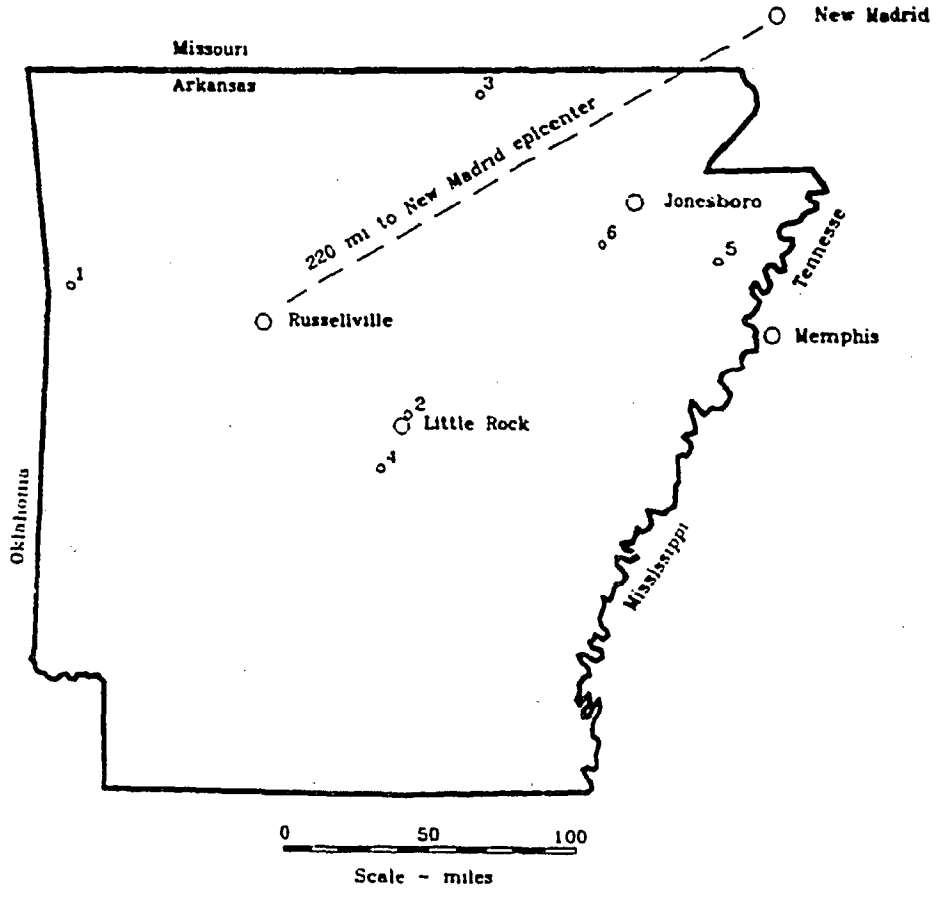

EARTHQUAKES FELT (1843 - 1936)

1 - 1843 - Generally felt throughout Arkansas with three shocks reported at Van Buren but not confirmed

2 - 1878 - Felt in Little Rock, severe along the Missouri River

3 - Slides in railway cut at Melbourne about 100 mi northeast of Russellville

4 - 1918 - Epicenter 10 to 30 mi southeast of Little Rock Felt in Memphis, Tennessee

5 - 1923 - Epicenter at Marked Tree Felt in Arkansas, Kentucky, Illinois, Missouri, and Tennessee

6 - 1936 - Epicenter about 32 mi southeast of Jonesboro Intensity IV at the epicenter, probably I at Russellville

Figure 2-15 Locations of Earthquakes Probably Felt in the Russellville Area (Arkansas Power and Light Company, 1967, Pl. 2E.i)

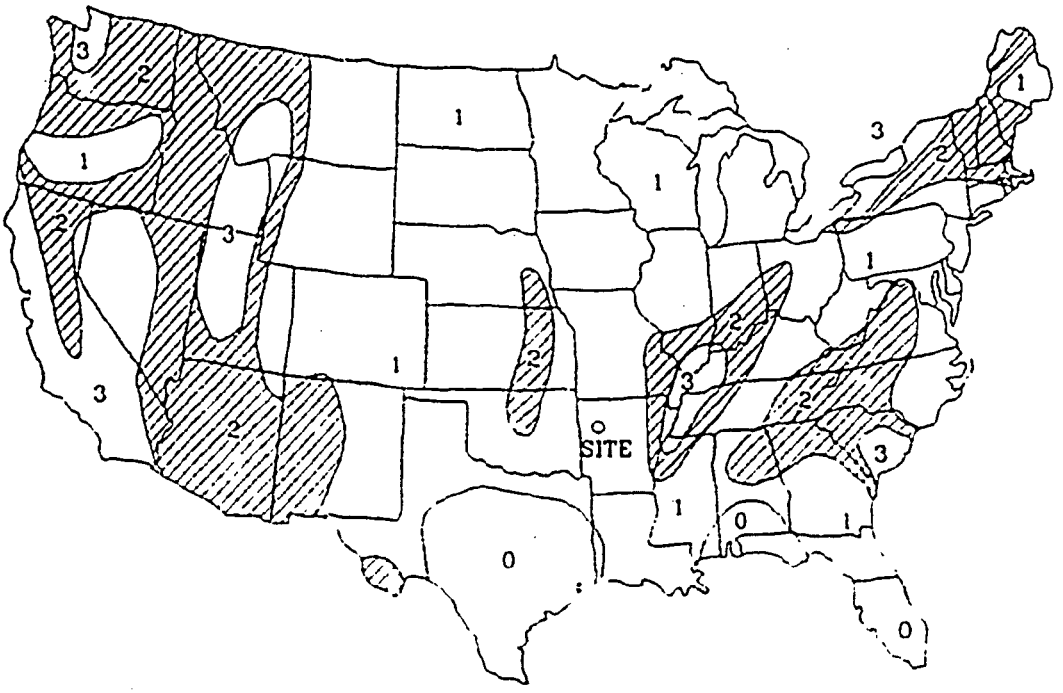

EXPLANATION

ZONE 0 - No damage

ZONE 1 - Minor damage, distant earthquakes may cause damage to structures with fundamental periods greater than 1.0 seconds, corresponds to intensities V and VI of the M.M.* Scale

ZONE 2 - Moderate damage, corresponds to intensity VII of the M.M.* Scale

ZONE 3 - Major damage, corresponds to intensity VIII and higher of the M.M.* Scale

This map is based on the known distribution of damaging earthquakes and the M.M.* intensities associated with these earthquakes, evidence of strain release, and consideration of major geologic structures and provinces believed to be associated with earthquake activity. The probable frequency of occurrence of damaging earthquakes in each zone was not considered in assigning ratings to the various zones.

* Modified Mercalli Intensity Scale of 1931

REFERENCE. Siesmic Risk Studies in the U.S. S.T. Algermissen, 1969

0 100 200 300 400 500 MILES
SCALE

Figure 2-16 Seismic Risk Map (prepared by Dr. S. T. Algermissen, et. al., U. S. Coast and Geodetic Survey, January 1969)

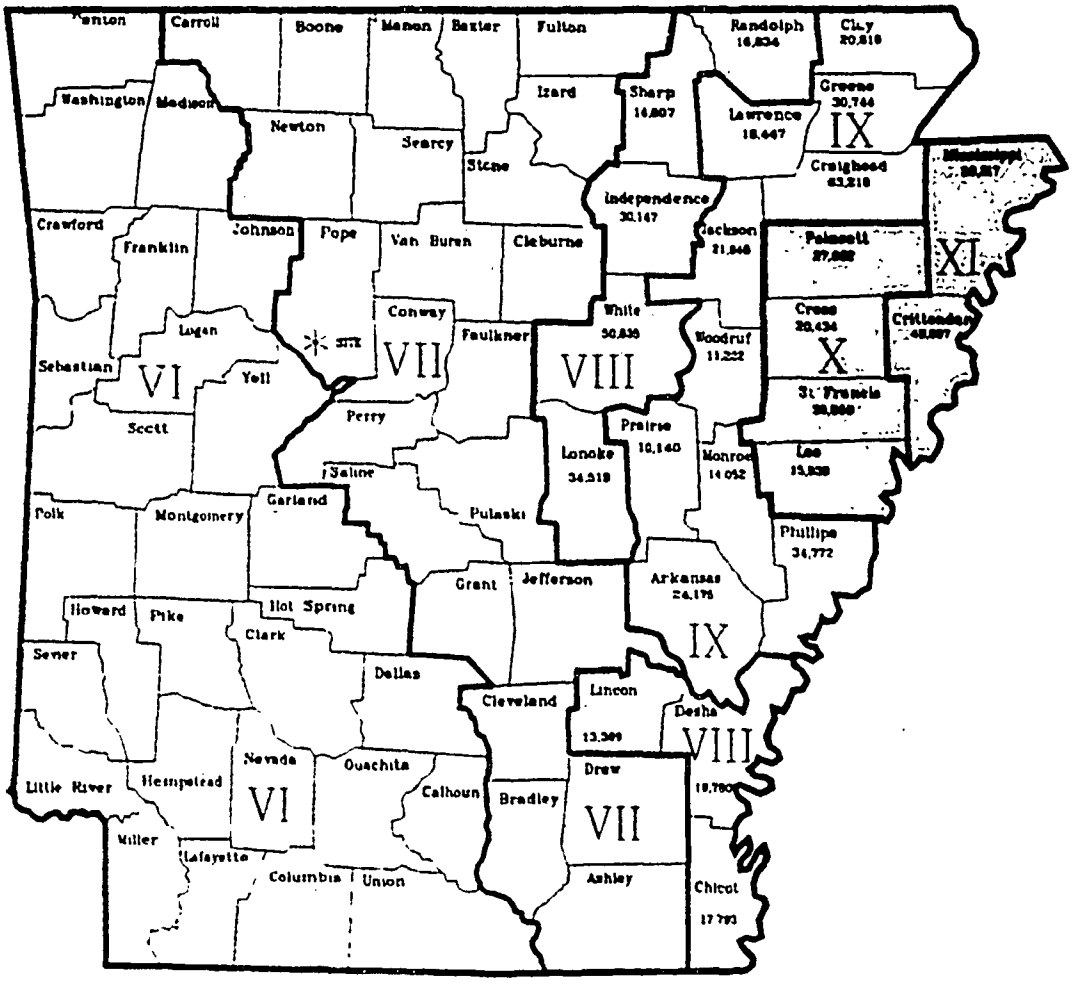

Figure 2-17 Maximum Predicted Earthquake Intensities, Modified Mercalli Scale
(U. S. Geological Survey, June 1986)

REFERENCES

1. Arkansas Nuclear One, Unit 1, Safety Analysis Report, Section 2.

2. Arkansas Nuclear One, Unit 2, Safety Analysis Report, Section 2.

3. "Arkansas Statistical Abstract - 1986", Prepared by the State Data Center, University of Arkansas at Little Rock.

4. Personal communication with Russellville Mayor Vernon Howard (3/2/89).

5. "The Environmental Geology of the Russellville, Arkansas Area", by Richard R. Cohoon, Doctor of Education Thesis, Oklahoma State University, May 1974.

6. Quick Reference Data Summary for Pope County, December 1988, Prepared by the State Data Center (SDC) and the Small Business Development Center (SBDC), Research and Public Service, University of Arkansas at Little Rock.

7. Personal communication with Dr. Jack Hamm, Dean, School of Systems Science, Arkansas Tech University (2/28/89).

8. "Flood Plain Information, Arkansas River and Tributaries, Russellville-Dardanelle, Arkansas", Prepared by Corps of Engineers, U.S. Army, Little Rock, Arkansas, District, February 1969.

9. Personal communication with Mr. Herman Luebker, Physical Plant Director, Arkansas Tech University (3/9/89).

10. Soil and Foundation Investigation Report, Tucker Coliseum (Special Events Center), Arkansas Tech University, Job No. 73365, Grubbs Consulting Engineers, Inc., January 7, 1974.

11. "The Mississippian and Pennsylvanian Systems in the U.S.", USGS Prof. Paper IIIO-0, p.03.

3. TRIGA MARK I REACTOR

3.1 INTRODUCTION

The TRIGA Mark I reactor was developed by General Atomic Division of General Dynamics Corporation for use by universities and research institutions as a general purpose research and training facility. Design data for the reactor are summarized in Table 1-1. Figure 3-1 Shows the TRIGA Mark I reactor.

3.2 REACTOR MECHANICAL DESIGN AND EVALUATION

3.2.1 Reactor Fuel Elements

3.2.1.1 Fuel-Moderator Element

The active part of each fuel-moderator element, shown in Figure 3-2, is approximately 1.43 in. (3.63 cm) in diameter and 15.0 in. (38.1 cm) long. The fuel is a solid, homogeneous mixture of uranium-zirconium hydride ($U\text{-}ZrH_{1.6}$) alloy containing 8.5% by weight of uranium enriched to 20% U-235. The hydrogen-to-zirconium ratio is 1.6 and each element contains ≈ 35 g of U-235. To facilitate hydriding, a small hole is drilled through the center of the active fuel section and a zirconium rod is inserted in this hole after hydriding is complete.

Each element is sealed in a 0.020 in. (0.0508 cm) stainless steel cladding, which will retard wear and corrosion, and all closures are made by heliarc welding. Two sections of graphite are inserted in the can, one above and one below the fuel, to serve as top and bottom reflectors for the core. A molybdenum disc separates the lower graphite section from the fuel.

Stainless steel fixtures are attached to both ends of the can. The lower end fixture supports the element on the bottom grid plate and the upper end fixture consists of a knob for attachment of the fuel-handling tool and a triangular spacer which permits cooling water to flow through the upper grid plate. The overall length of the element is about 29.63 in. (75.3 cm) including the stainless steel fixtures attached to both ends and the total weight of a fully-loaded fuel element is ≈ 7 lbm. (3.18 kg). Table 3-1 summarizes the fuel element specifications.

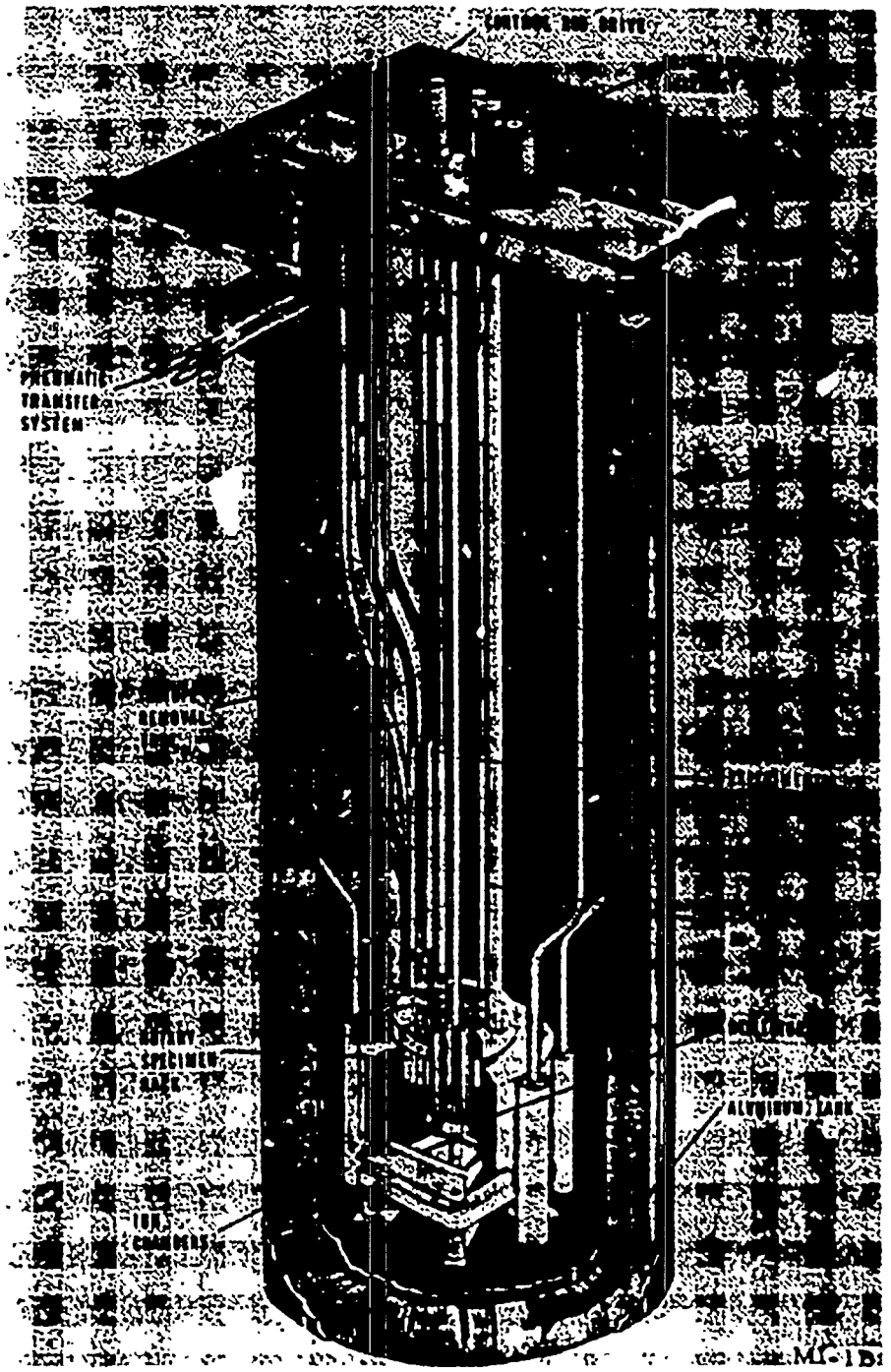

Figure 3-1 TRIGA Mark I Reactor

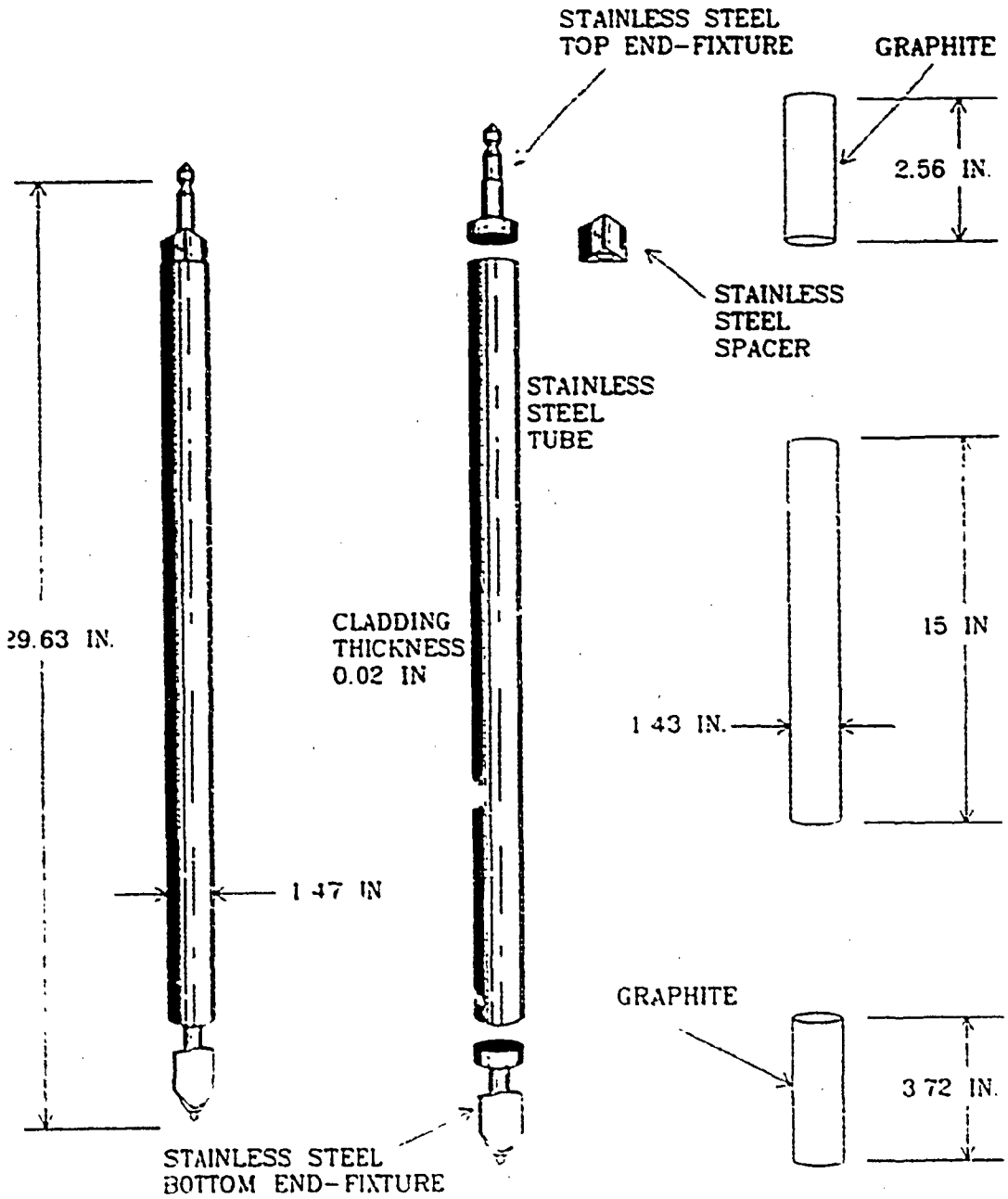

Figure 3-2 Fuel-Moderator Element

Table 3-1 Summary of Fuel Element Specifications

Fuel-Moderator Material	
H/Zr ratio	1.6 nominal, 1.65 maximum
Uranium content	8.5% wt
Enrichment (U-235)	19.7 ± 0.2
Diameter	1.43 in.
Length	15.0 in.
Graphite End Reflectors	
Porosity	20%
Diameter	1.43 in.
Length	3.45 in. Top 2.56 in. Bottom
Cladding	
Material	Type 304 SS
Wall Thickness	0.020 in.
Length	22. in.
End Fixtures and Spacer	Type 304 SS
Overall Element	
Outside diameter	1.47 in.
Length	29.63 in. overall
Weight	7. lbm

3.2.1.2 Instrumented Fuel Moderator Assembly

Instrumented fuel-moderator elements, shown in Figure 3-3, are provided with the core of each TRIGA pulsing reactor. These instrumented elements have the same dimensions and fuel material as standard elements, but they contain three chromel-alumel thermocouples embedded in the fuel located about 0.3 in. (0.76 cm) from the vertical centerline and 1 in. above, 1 in. below, and at the horizontal centerline of the fuel. The thermocouple electrical leads pass through a seal in the upper end fixture. A water tight aluminum conduit carries the electrical leads to the surface of the reactor pool. Thermocouple specifications are listed in Table 3-2.

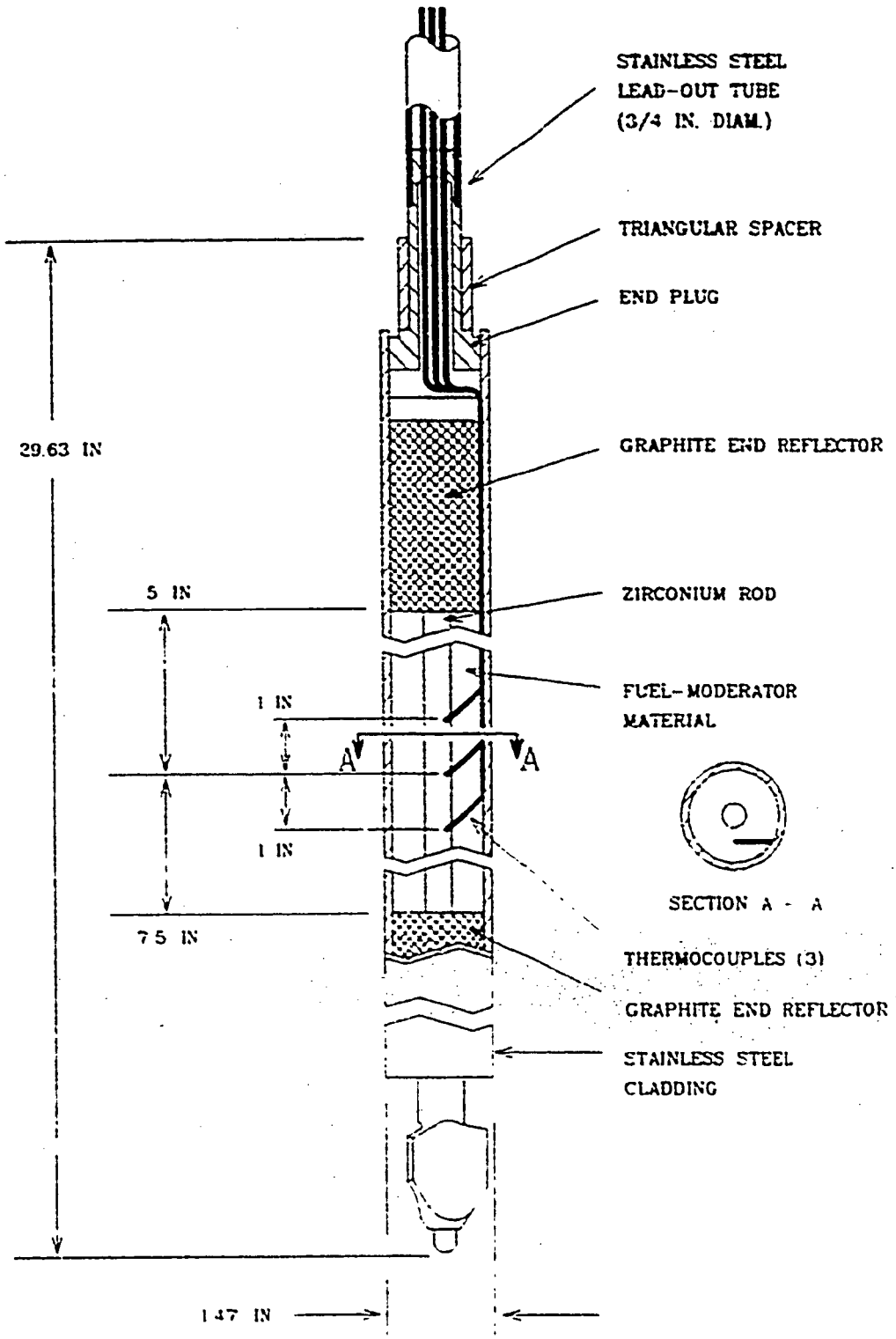

Figure 3-3 Instrumented Fuel Assembly (not to scale)

Table 3-2 Thermocouple Specifications

Type	Chromel-alumel
Wire Diameter	0.005 in.
Resistance	24.08 ohms per double foot at 68 F
Junction	Grounded
Sheath Material	Stainless Steel
Sheath Diamete	0.040 in.
Insulation	MgO
Lead-out Wire	
Material	Chromel-alumel
Size	20 AWG
Color Code	Chromel - Yellow (positive)
	Alumel - Read(negative)
Resistance	0.59 ohms per double foot at 75 F

3.2.1.3 Graphite Dummy Elements

Graphite dummy elements are used to fill grid positions not filled by the fuel-moderator elements or other core components. They are of the same general dimensions and construction as the fuel-moderator elements, but are filled entirely with graphite and are clad with aluminum.

3.2.2 Reactor Core Assembly

The reactor core consists principally of a lattice of fuel-moderator elements, graphite dummy elements, and control rods surrounded by a graphite reflector (Figure 3-4 and Figure 3-5). A typical core arrangement is shown in Figure 3-6. The core is cooled by natural circulation of water and the coolant occupies about 1/3 of the core volume.

3.2.2.1 Grid Plates

The top grid plate (Figure 3-7) provides accurate lateral positioning of the core components (fuel-moderator elements and dummy elements, control rod guide tubes, central thimble, neutron source tube and the pneumatic transfer tube). It is an anodized aluminum plate 5/8 in.(1.59 cm) thick. Pads welded to the top surface of the reflector container and anodized to resist wear and corrosion support the grid plate. Stainless steel dowel pins orient the grid.

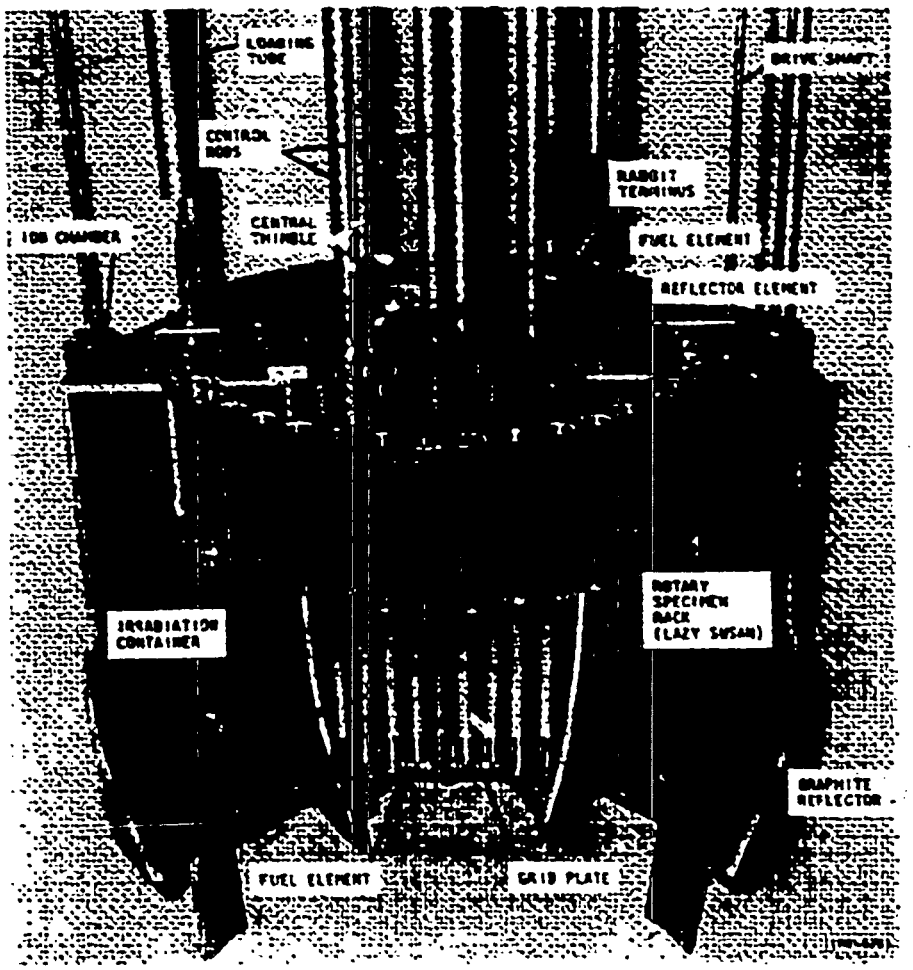

Figure 3-4 Cutaway View Showing TRIGA Mark I Core Arrangement with Rotary Specimen Rack

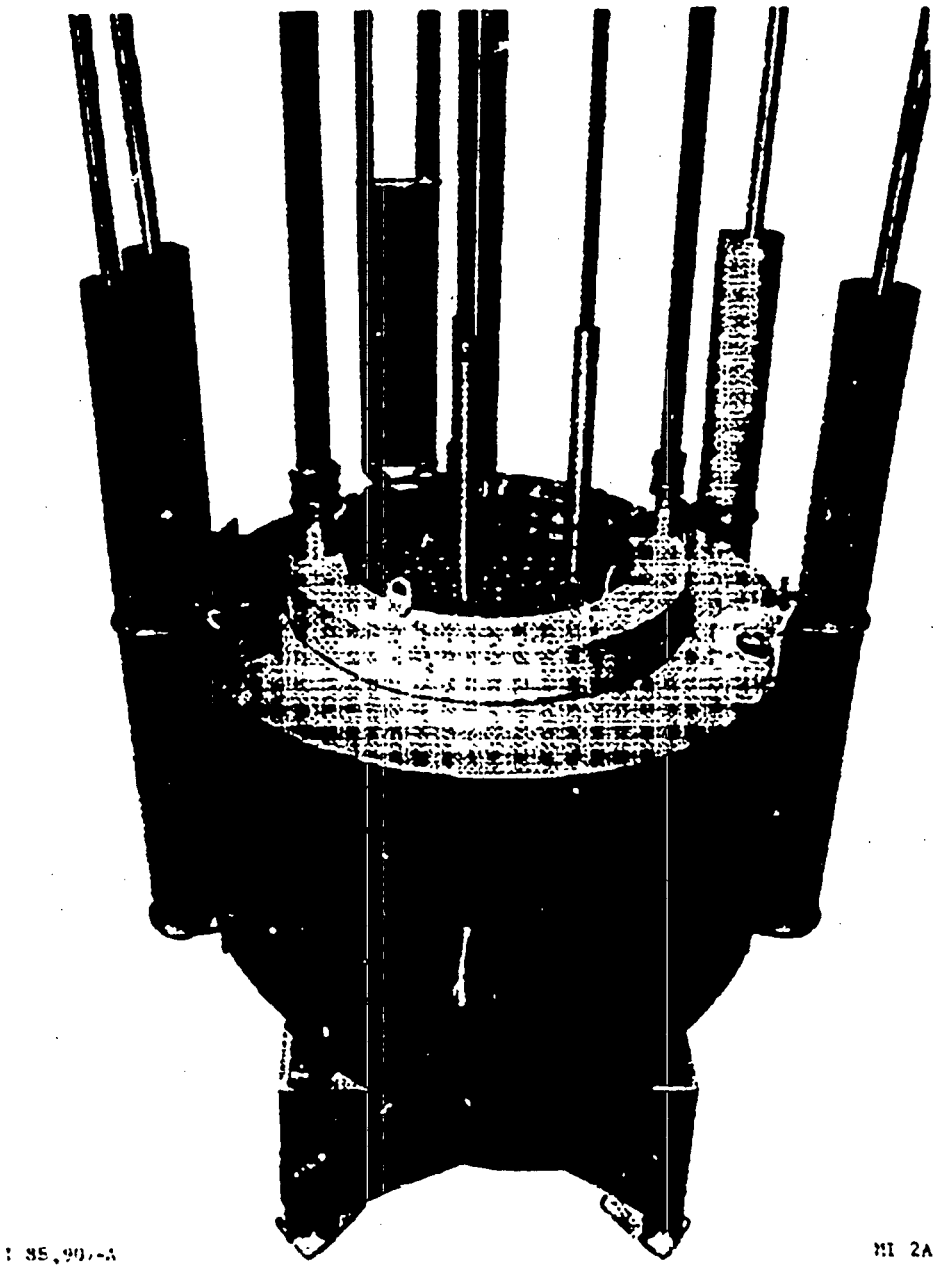

Figure 3-5 Typical Reactor Core and Reflector Assembly

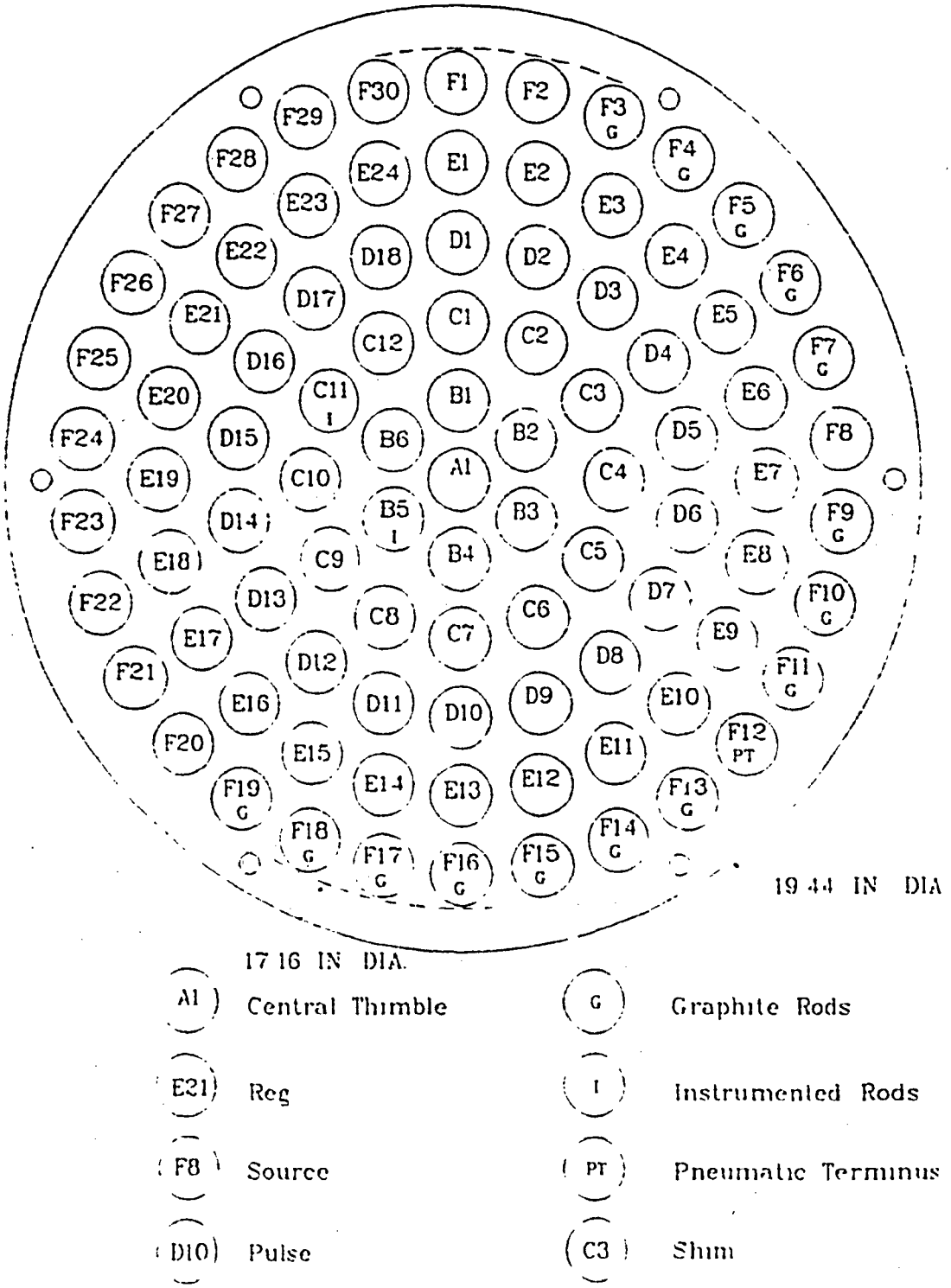

Figure 3-6 Typical Core Configuration

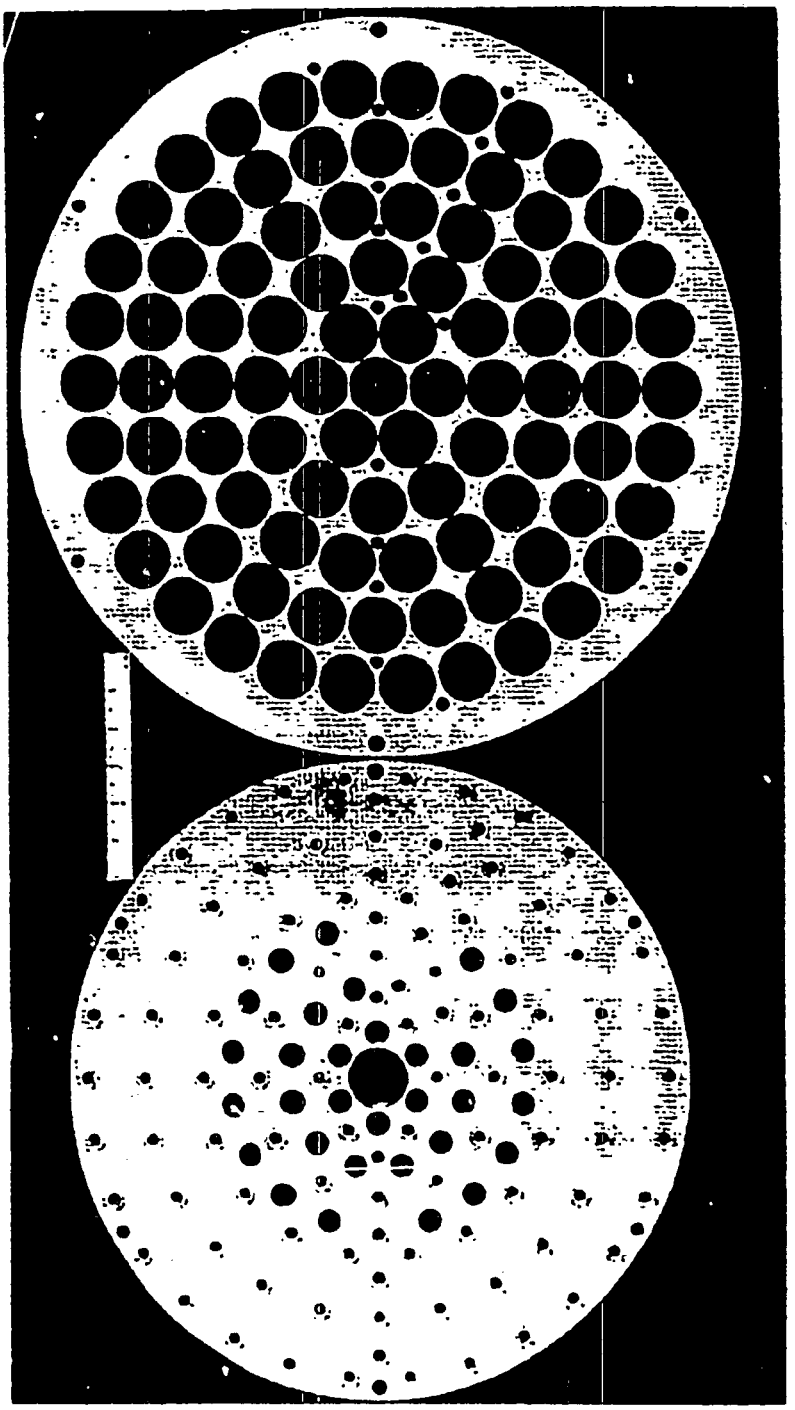

Figure 3-7 Upper and Lower Grid Plates

Ninety one (91) holes, 1.505 in. (3.82cm) in diameter, are drilled into the top grid plate in five circular bands around the circular hole which is 1.515 in. in diameter. Small holes at various positions in the top grid plate permit insertion of foils into the core to obtain flux data.

The differential area between the triangular-shaped spacer flutes at the top of the fuel element and the round holes in the top grid plate permits passage of cooling water through the plate.

The bottom grid plate (Figure 3-7) is an anodized aluminum plate 3/4 in. (1.9 cm) thick which supports the entire weight of the core and provides accurate spacing between the core components. L-shaped lugs welded to the underside of the reflector container, support the bottom grid plate. Countersunk holes in the bottom grid plate are aligned with fuel element holes in the top grid plate and receive the adapter end of the fuel-moderator elements and the pneumatic transfer tube. Numerous cooling holes in the bottom grid plate allow flow around the fuel.

3.2.3 Neutron Source and Holder

An americium-beryllium neutron source, double encapsulated to ensure leak-tightness, will be used for startup. Its initial strength at manufacture was 3 Ci (curies) and the current source strength is estimated to be 1.88 Ci. This source has a nominal outside diameter of 0.7 in. and a height of 0.7 in..

The neutron source holder shown in Figure 3-8 is the same general size and shape as a fuel element and it can be placed in any vacant fuel or graphite element location. The upper and lower portions of the holder are screwed together to enclose a cavity that contains the source. Water leakage into the cavity is prevented by a soft aluminum ring seal. A shoulder at the upper end of the holder supports the source holder in the upper grid plate and the source is positioned at the horizontal centerline of the core. The upper end fixture of the source holder contains a knob similar to that of a fuel element so that the source holder can be installed or removed with the fuel handling tool. A steel wire may be inserted through a small hole in the upper end fixture to handle the source from the top of the tank.

3.2.4 Reactor Reflector Assembly

The reflector (Figure 3-4 and Figure 3-5) is a ring-shaped block of graphite that surrounds the core radially. It is 12 in. thick radially with an inside diameter of 18 in. and a height of 22 in.. The graphite is protected from water penetration by a leak-tight welded aluminum can. A 'well' on the inside diameter in the top of the

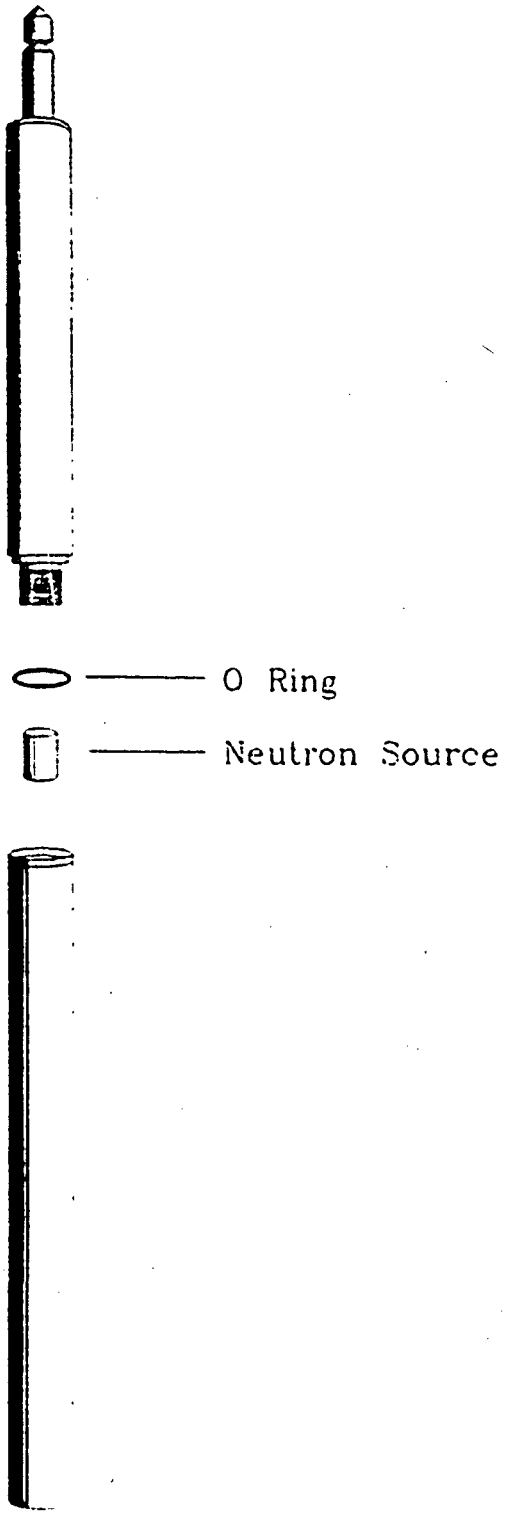

Figure 3-8 Neutron Source Holder

graphite reflector is provided for the rotary specimen rack which is self-contained and does not penetrate the sealed reflector at any point. The reflector has one leak-tight penetration lined with aluminum to serve as a beam port Since this penetration will not be used, it will be capped and sealed before installation. The reactor core and reflector assembly forms a cylinder approximately 43 in. in diameter and 23 in. height. Three Lugs are provided for lifting the assembly. Four vertical tubes attached to the reflector assembly permit accurate and reproducible positioning of neutron detectors used for monitoring reactor operation.

3.2.4.1 Reflector Platform

The reflector assembly rests on an aluminum platform shown in Figure 3-5. It is a square all-welded aluminum frame structure and rests on the floor of the tank on four legs secured by aluminum anchor bolts welded to the tank bottom. This platform raises the lower edge of the reflector assembly about 24 in. (60 cm) above the tank floor.

3.2.5 Reactor Pool Tank

The reactor pool tank (Figure 3-1) consists of an aluminum vessel installed below ground and surrounded (bottom and sides) by 3 ft (0.91 m) of reinforced concrete (density 2.4 g/cm^3). The tank has an outside diameter of 10 ft (3.05 m) and a depth of 25 ft (7.6 m) and a wall thickness of 0.25 in. (0.625 cm). The tank is water-proofed by continuous welded joints. The integrity of the joints will be verified by leak testing. The outside of the tank is coated for corrosion protection.

An aluminum angle used for mounting the neutron detectors, underwater lights, and fuel storage racks is welded on to the top of the tank. Demineralized water in the tank provides approximately 20 ft (6.1 m) of shielding above the core.

The center channel assembly is located at the top of the reactor tank directly over the reactor core. It provides support for the isotope production facility drive and indicator assembly, the control rod drives and the tank covers. The assembly consists of two 8 in. (20.3 cm) structural steel channels covered with steel plates 16 in. (40.7 cm) wide and 5/8 in (1.6 cm) thick. This assembly is 12 ft long and is designed to support a shielded isotope cask weighing 3.5 tons (3175 kg) placed over the specimen removal tube.

Six aluminum grating covers that are hinged and installed flush with the floor close the top of the reactor. Lucite plastic, 1/4 in. thick, attached to the bottom of the grating prevents foreign matter from entering the tank while permitting visual

observation. Radiolytic gases released during reactor operation are ventilated through a gap between one edge of the plastic and the grating. Two flush lifting handles are provided on each cover to facilitate its movement.

3.2.6 Experimental Facilities

Several Experimental facilities are available in the reactor. For isotope production, a rotary specimen rack is located in a well in the reflector assembly. A pneumatically operated "rabbit" transfer system, which penetrates the reactor core lattice, is provided for the production of very short-lived radioisotopes. A central thimble that enters the center of the core lattice makes possible the extraction of a highly collimated beam of radiation or insertion of small samples into the region of maximum flux. There are no beam ports in this arrangement of the reactor. Evacuated vertical tubes inserted into the reactor and located on the top, or the side, of the reflector may be used to obtain a collimated beam of radiation. Special shielding may be required whenever this is done. Large samples in water tight containers may be lowered into the space around the reflector for irradiation. If necessary, the core tank may be used to store samples after irradiation.

3.2.6.1 Rotary Specimen Rack

The rotary specimen rack assembly (Figure 3-9 and Figure 3-10) is a ring-shaped, seal-welded aluminum housing containing an aluminum rack mounted on special bearings. There are 40 evenly spaced tubular aluminum containers that serve as receptacles for the specimen containers. All positions are exposed to neutron fluxes of comparable intensity. The specimen rack assembly can be rotated around the core manually, or by motor from the top of the reactor tank through a drive shaft. A water tight aluminum tube encloses the drive shaft and a positioning shaft that orients each specimen container with the specimen removal tube. Since this tube is in a straight line from the reflector, shielding is provided by 5 ft (1.5 m) of polyethylene in the tubing.

The drive and indicator assembly is mounted on the center channel assembly. It has an indicator dial with 40 divisions, a crank for rotating the specimen rack, a motorized gear train, and a locking rod handle. The motorized drive permits continuous rotation of one revolution per minute. It consists of a fractional horsepower motor, a worm gear, and a slip clutch located inside the drive-and-indicator assembly box. Use of the motor assures a uniform average flux to all samples in the rack.

The specimen removal tube, located 180 degrees from the tube and shaft assembly, terminates below the center channel assembly. The tube has an internal

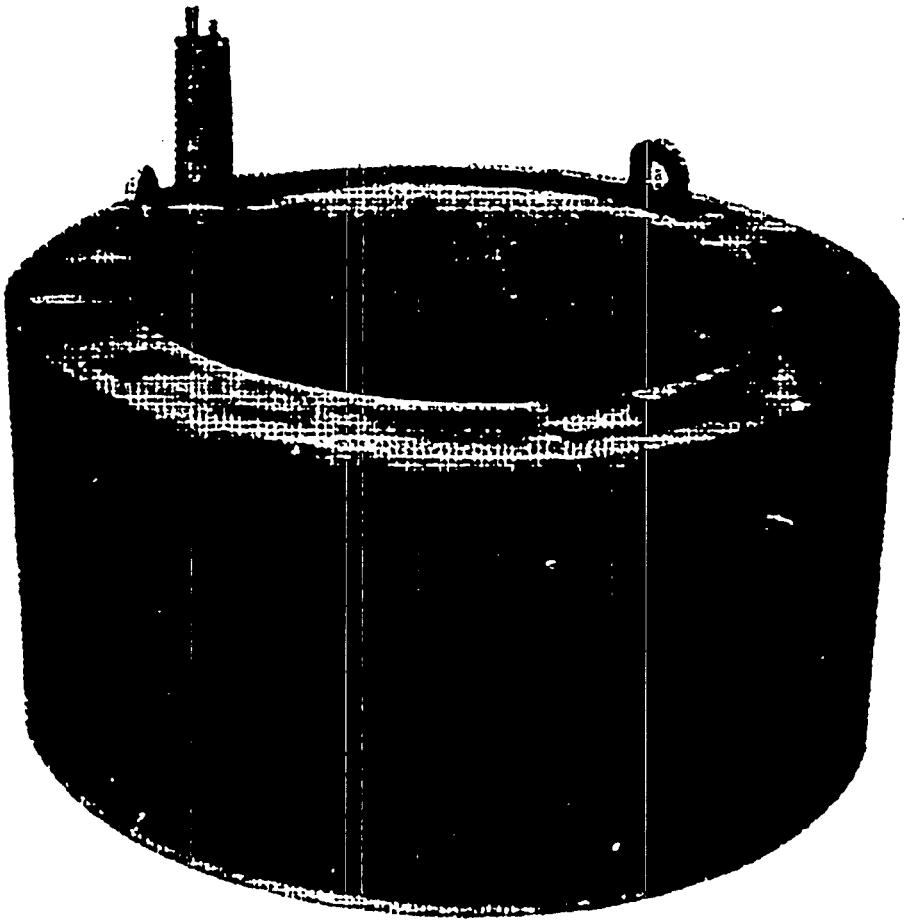

M1-5

Figure 3-9 Rotary Specimen Rack Assembly

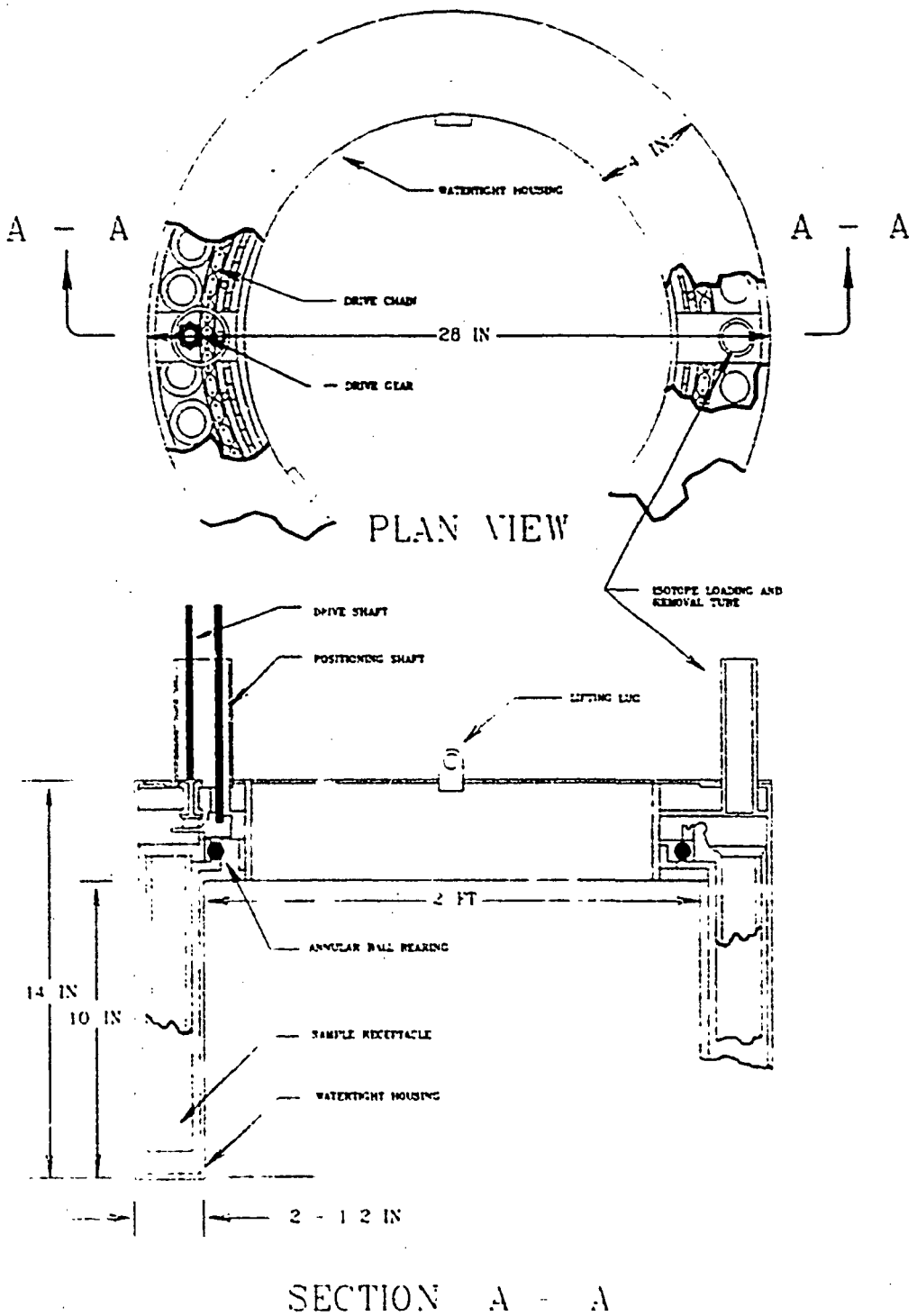

Figure 3-10 Rotary Specimen Rack Assembly (schematic)

diameter of 1.3 in. (3.4 cm) and an axial offset of approximately 18 in. (35.7 cm) between the top and bottom tube to avoid radiation streaming from the reactor. Loading and unloading of the 40 specimen positions in the rack take place through this tube.

A standard fishing pole, shown in Figure 3-11, serves as a specimen lifting assembly and enables the operator to keep the isotopes at a distance. An electric cable attached to the reel serves as a hoisting cable for the specimen container and a power conductor for actuating the specimen pickup tool. The specimen pickup tool is a small solenoid-operated, scissors-like device that fits into the upper end of the specimen container. The pickup solenoid is actuated from a button on the reel.

The irradiation specimen container, shown in Figure 3-12, consists of a cylindrical body and screw cap which is formed to fit the pickup tool. Two containers may be screwed together and used as a single unit in each of the 40 positions. Dimensions of the container are given in Table 3-3. For short duration experiments polyethylene containers may be used. Aluminum containers are recommended for long term experiments, or when fissionable or heat producing materials, are irradiated.

Table 3-3 Irradiation Specimen Container Dimensions

Overall length	5-1/2 in. (14 cm)
Overall length double	9-3/16 in. (23.3 cm)
Outside diameter	1-1/4 in. (3.2 cm) max
Inside diameter	15/16 in (0.94 cm)
Usable inside height	3-1/2 in. (8.9 cm)
Total inside volume	2.4 in.^{3} (40 cc)

3.2.6.2 Pneumatic Transfer System

The pneumatic transfer system rapidly conveys a specimen to and from the reactor. It consists of a blower, filter, solenoid valve, control box, and associated tubing, as shown in Figure 3-13. The in-core terminus can be installed in one of the outer lattice positions provided in the top grid plate (see Figur 3-1), and the receiver/sender unit may be located at any point where the total one-way travel of the specimen capsule does not exceed 125 ft The blower provides a pressure differential for injection or ejection of the specimen by means of vacuum. The aluminum connecting tubing has an outer diameter of 1.25 in. (3.18 cm.). Effective space inside the specimen capsule shown in Figure 3.14 is 0.68 in. (1.7 cm) diameter by 4-1/2 in. (11.4 cm) length, giving a capsule volume of 1.6 in.^{3} (27 cm.^{3}). When

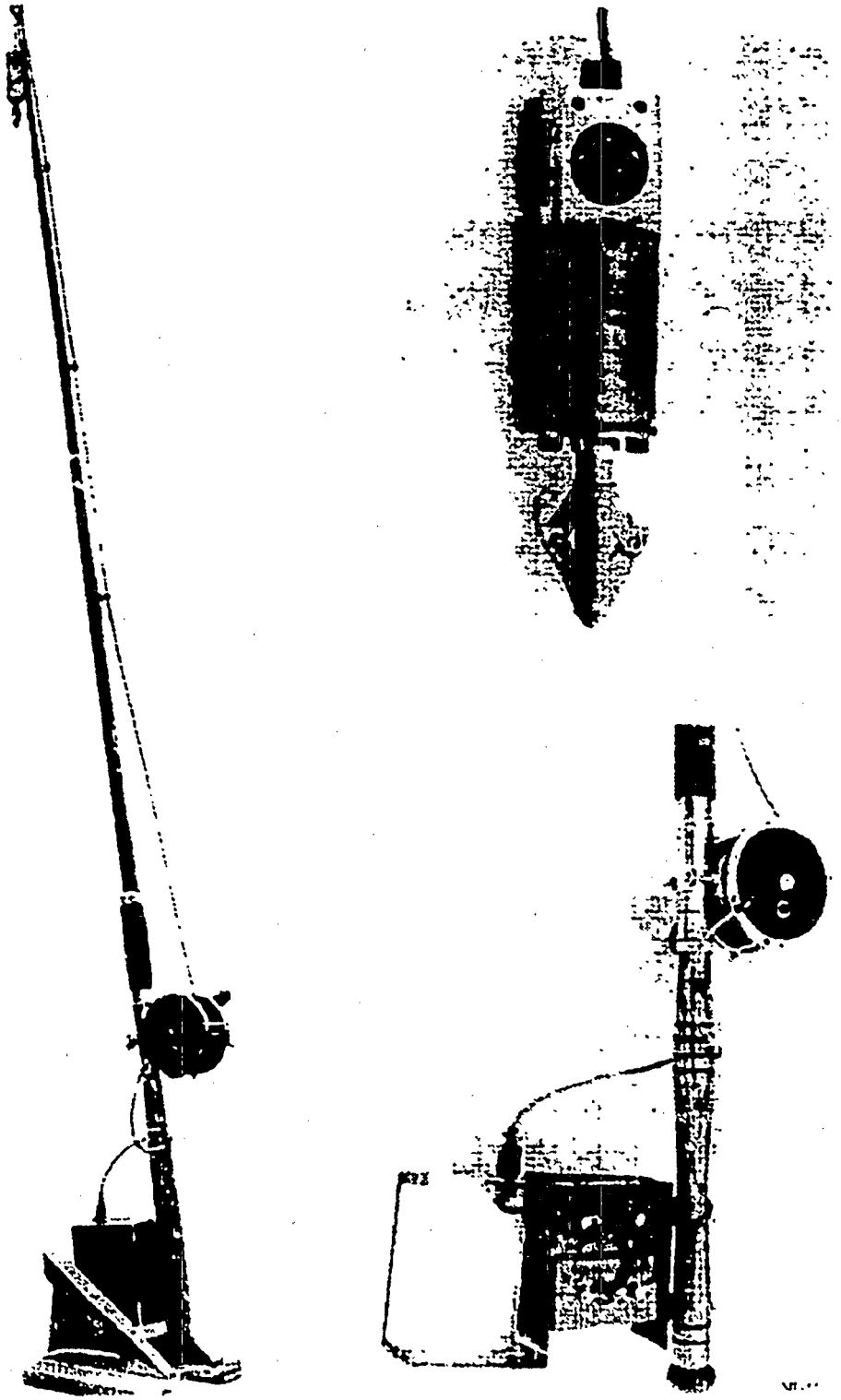

Figure 3-11 Specimen Lifting Assembly

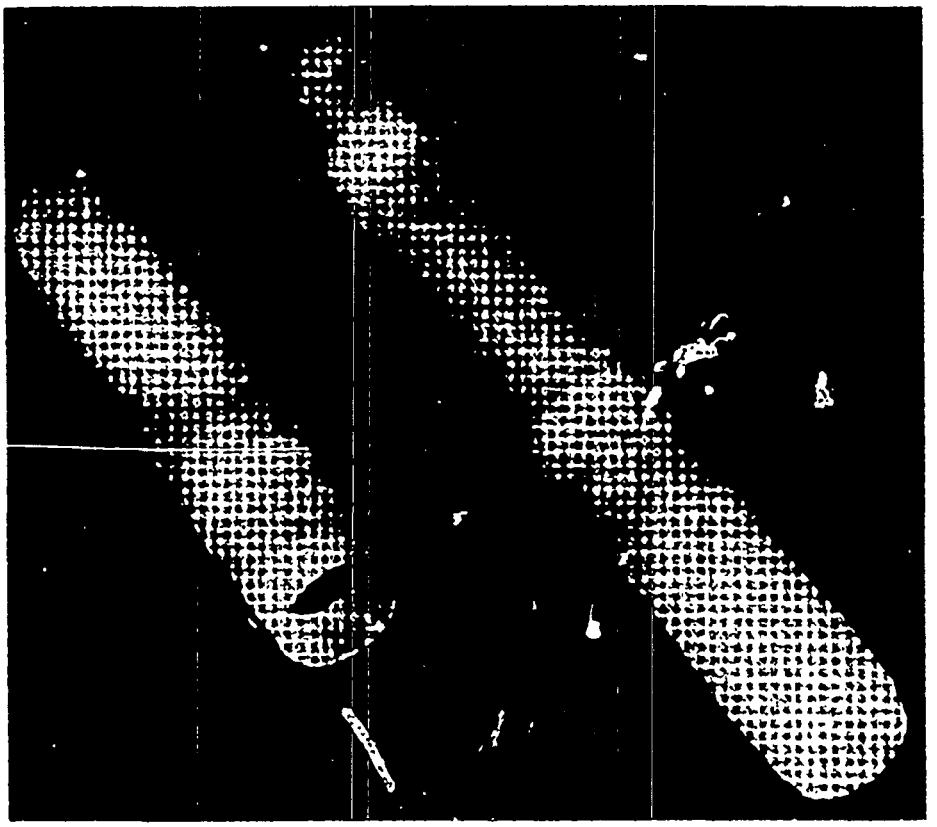

Figure 3-12 Plastic Irradiation Specimen Containers

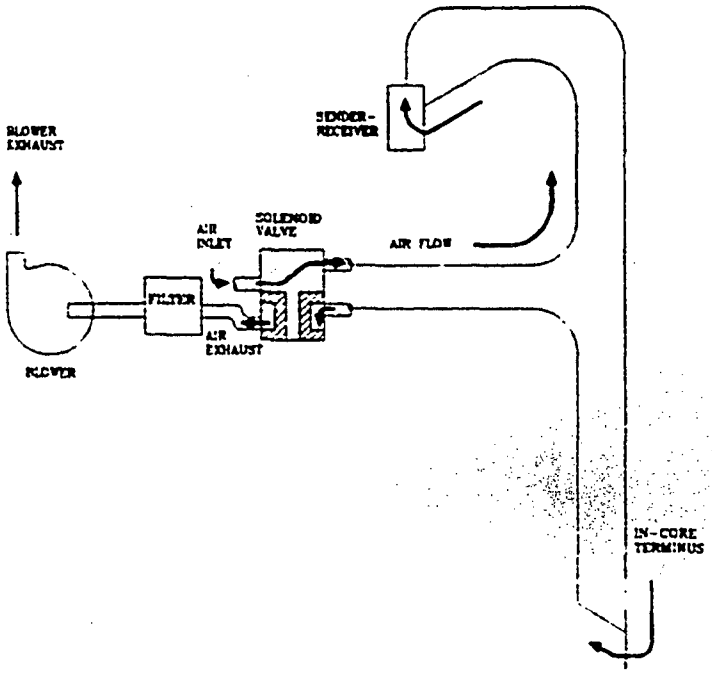

a From sender - receiver to terminus

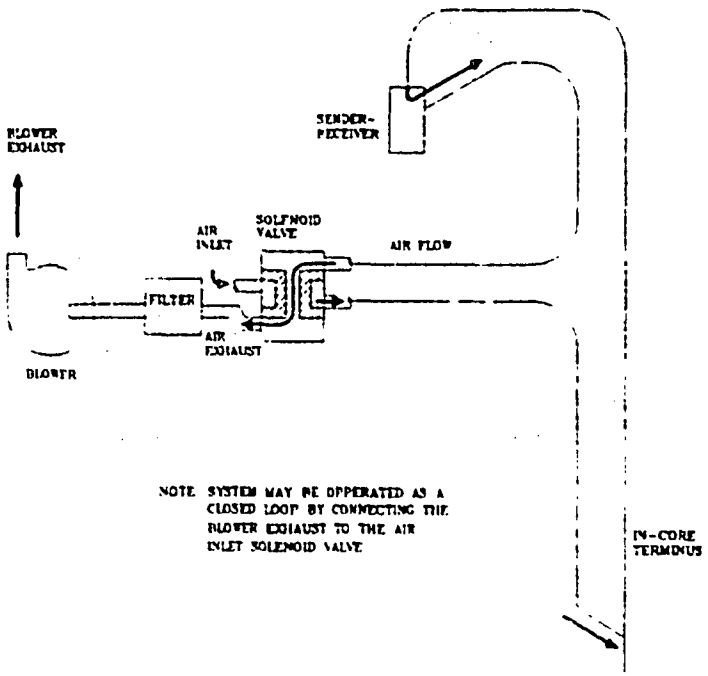

b From terminus to sender - receiver

Figure 3-13 Pneumatic Rabbit Transfer System

the polyethylene "rabbit" (Figure 3-14) containing the specimen tube is injected into the core it comes to rest in a vertical position approximately at the mid plane of the core. The specimen may be ejected from the core manually or automatically after a predetermined time. A solenoid-operated valve controls the air flow direction. Since the system is always under negative pressure, any leak will be into the system. All the air from the pneumatic system is passed through a filter before it is discharged.

3.2.6.3 Central Thimble

The central thimble (Figure 3-1) is an aluminum tube with an inside diameter of 1.33 in. (3.38 cm) and 1.5 in. (3.81 cm) outside diameter. It extends from the top of the reactor tank through the central hole in the top and bottom grid plates and terminates in a plug below the bottom grid plate. Four 1/4 in. (0.63 cm) diameter holes are drilled in the tube at the top of the active lattice. Compressed air supplied by a hose attached to a fitting at the top of the tube expels water that fills the tube normally. This provides a highly collimated beam of neutrons and gamma radiation. The location of the holes prevents expulsion of the water from the section of the tube located within the active lattice. The central thimble may also be used to irradiate small samples in the region of maximum flux.

3.2.7 Reactor Control System Design

3.2.7.1 Control Rods

The reactor uses three control rods: a regulating rod, a shim rod and a safety-transient (pulse) rod. They are sealed aluminum alloy type 6061 tubes approximately 20 in. long by 1.25 in. (1 in. for the safety-transient rod) outer diameter. The tube is filled with powdered boron carbide as a neutron absorber. A typical control rod is shown in Figure 3-15. Each of the rods pass through and are guided by perforated aluminum guide tubes, which pass through the top grid and fit into the bottom grid. Control rods are connected to their individual drive units by screwing the upper end of the rod into a control rod drive assembly connecting rod. Vertical travel of each rod is approximately 15 in. (38.1 cm). Reactivity worths and core positions for each rod are summarized in section 3.4. The regulating and shim rods are operated by an electromechanical (rack-and-pinion) drive unit. The pulse rod is operated by a pneumatic drive unit. The pulse rod cylinder is operated by an electromechanical drive unit.

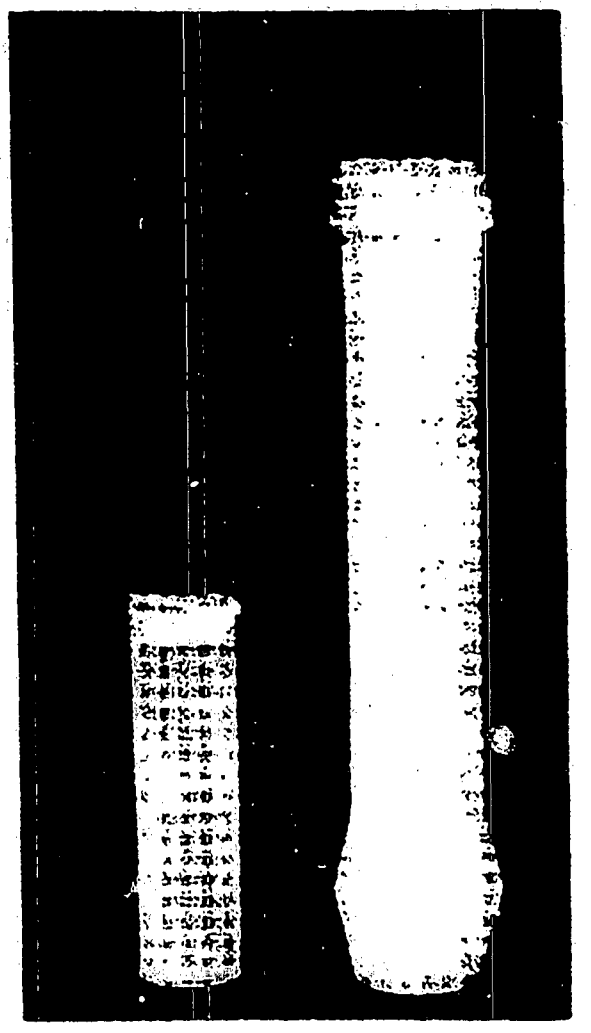

Figure 3-14 Specimen Capsule (Rabbit) Used in Pneumatic System

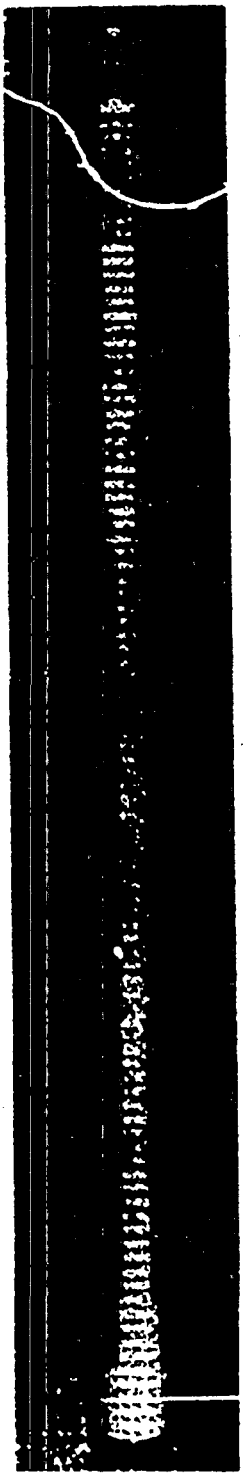

Figure 3-15 Typical Control Rod

3.2.7.2 Regulating and Shim Rod Drive Assemblies

Drive assemblies (Figure 3-16 and Figure 3-17) for regulating and shim rods are mounted on the central channel assembly (Figure 3-1). They consist of a motor and reduction gear driving a rack-and-pinion. A helipot connected to the pinion generates the position indication. The pinion gear engages a rack attached to a draw tube supporting an electromagnet. The magnet engages the armature which is attached to the connecting rod above the water level. The magnet, its draw tube, the armature, and the upper portion of the connecting rod, are housed in a tubular barrel. The barrel extends below the water level with the lower end of the barrel serving as a mechanical stop to limit the downward travel of the control rod assembly. Below the armature is a piston that travels within the barrel assembly. Since the upper portion of the barrel is well ventilated by large slots, the piston moves freely in this range. When the piston is within 2 inches of the bottom of its travel, its movement is restrained by the dash pot action of the grated vents in the lower end.

When the electromagnet attached to the draw tube is energized, the armature attached to the connecting rod is coupled with the magnet, and then the drive motor can move the control rods up or down. In the event of a power failure or scram signal, the control rod magnets are deenergized, and the rods fall by gravity into the core. From full out position it will take about one second for each rod to drop into the core. The rod drive motors are nonsynchronous, single-phase, and instantly reversible, and will insert or withdraw at a rate of 19 in. (48 cm) per minute for the shim rod and 24 in. (61 cm) per minute regulating rod. A key locked switch on the control console power supply prevents an unauthorized operation of all control rod drives. Electrical dynamic and static braking on the motor are used for fast stops to prevent the rods from coasting. Limit switches mounted on the drive assembly indicate the following at the console:

1. The up position of the magnet,
2. The down position of the magnet and thus the down position of the control rod,
3. The magnet in contact with the rod.

3.2.7.3 Safety-Transient Rod Drive Assembly

The safety-transient rod drive assembly (Figure 3-18 and Figure 3-19) is mounted on a steel frame on the central channel assembly. The pneumatic portion of the pneumatic-electromechanical drive is a single-acting pneumatic cylinder with its piston attached to the transient rod through a connecting rod assembly. The piston rod passes through an air seal at the lower end of the cylinder. Compressed

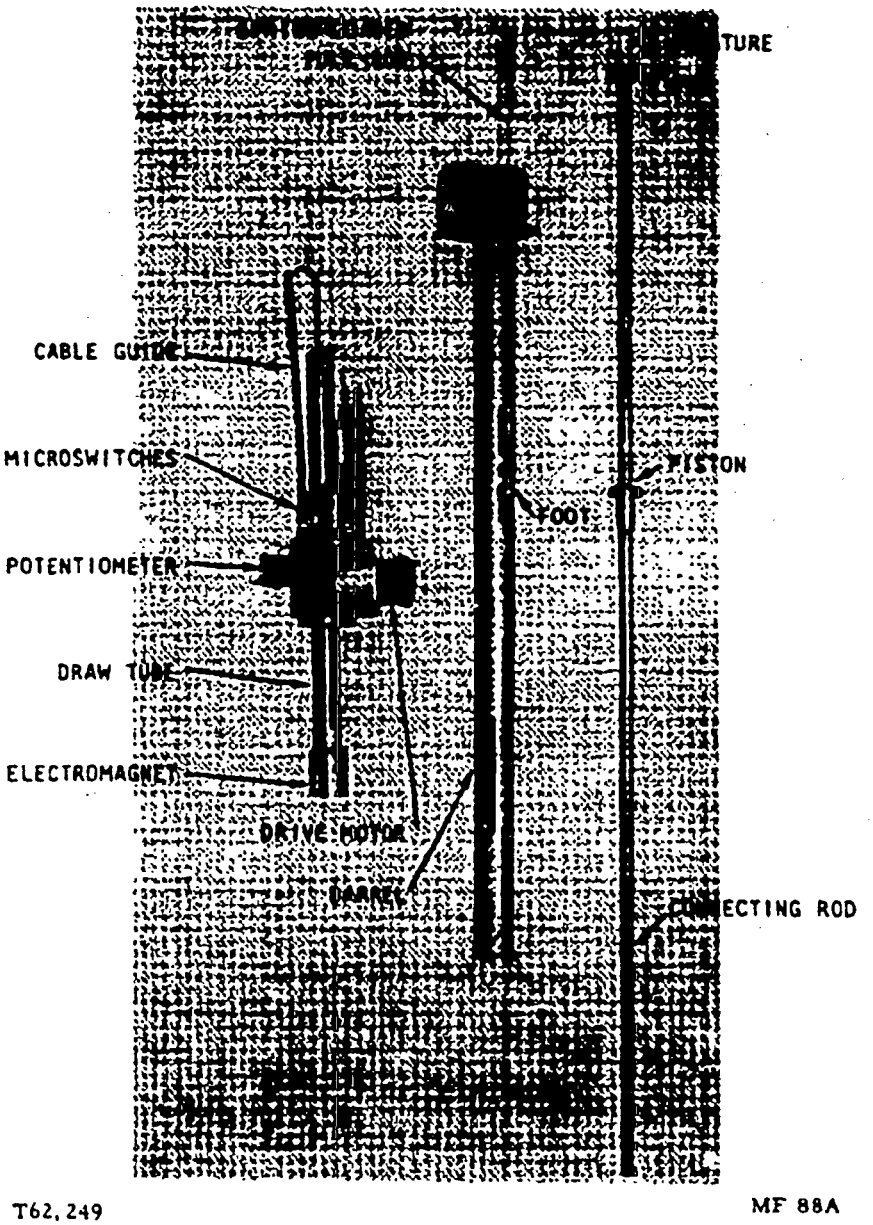

Figure 3-16 Rack-and-Pinion Control Cod Drive

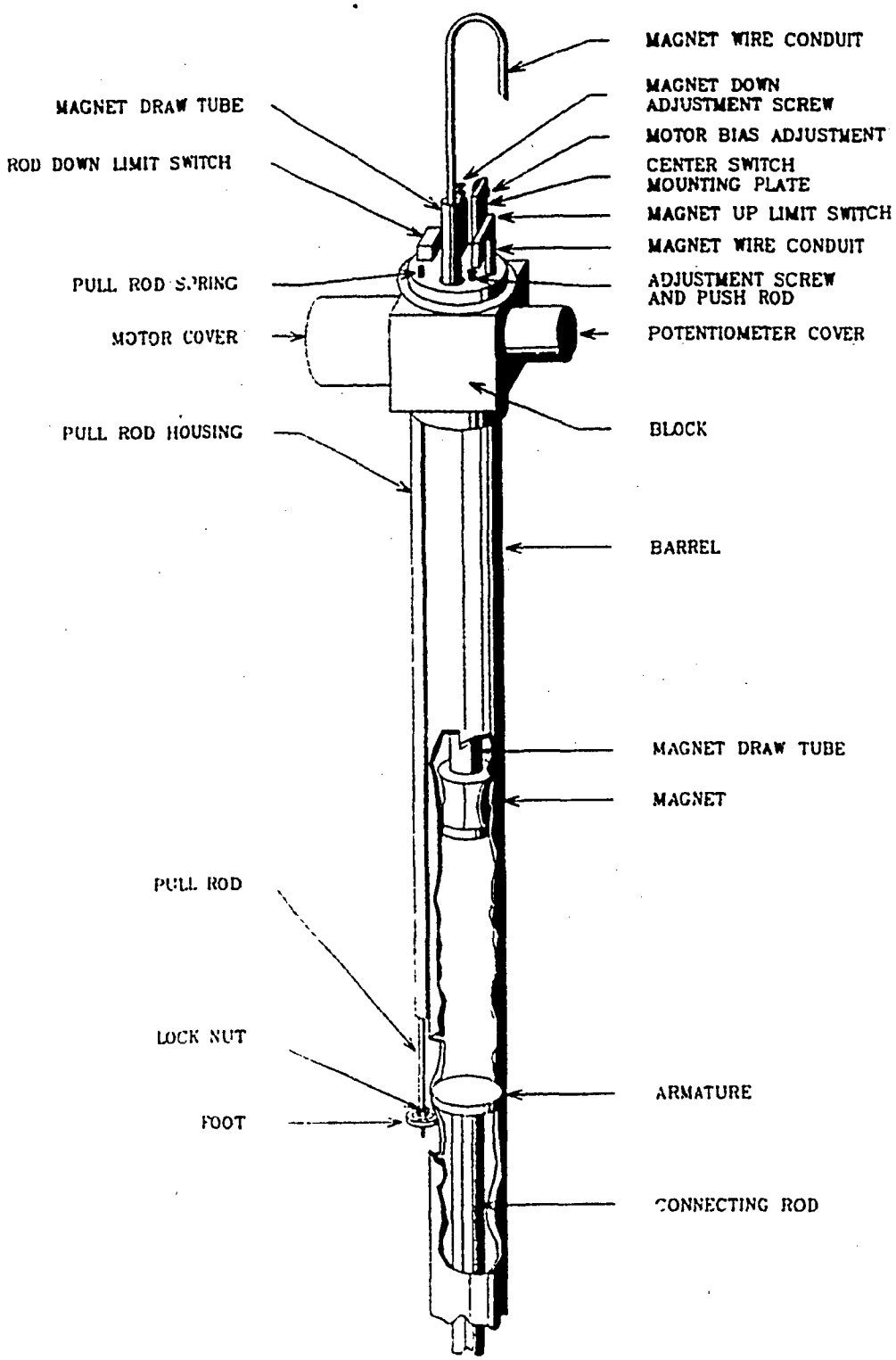

Figure 3-17 Rod Drive Mechanism

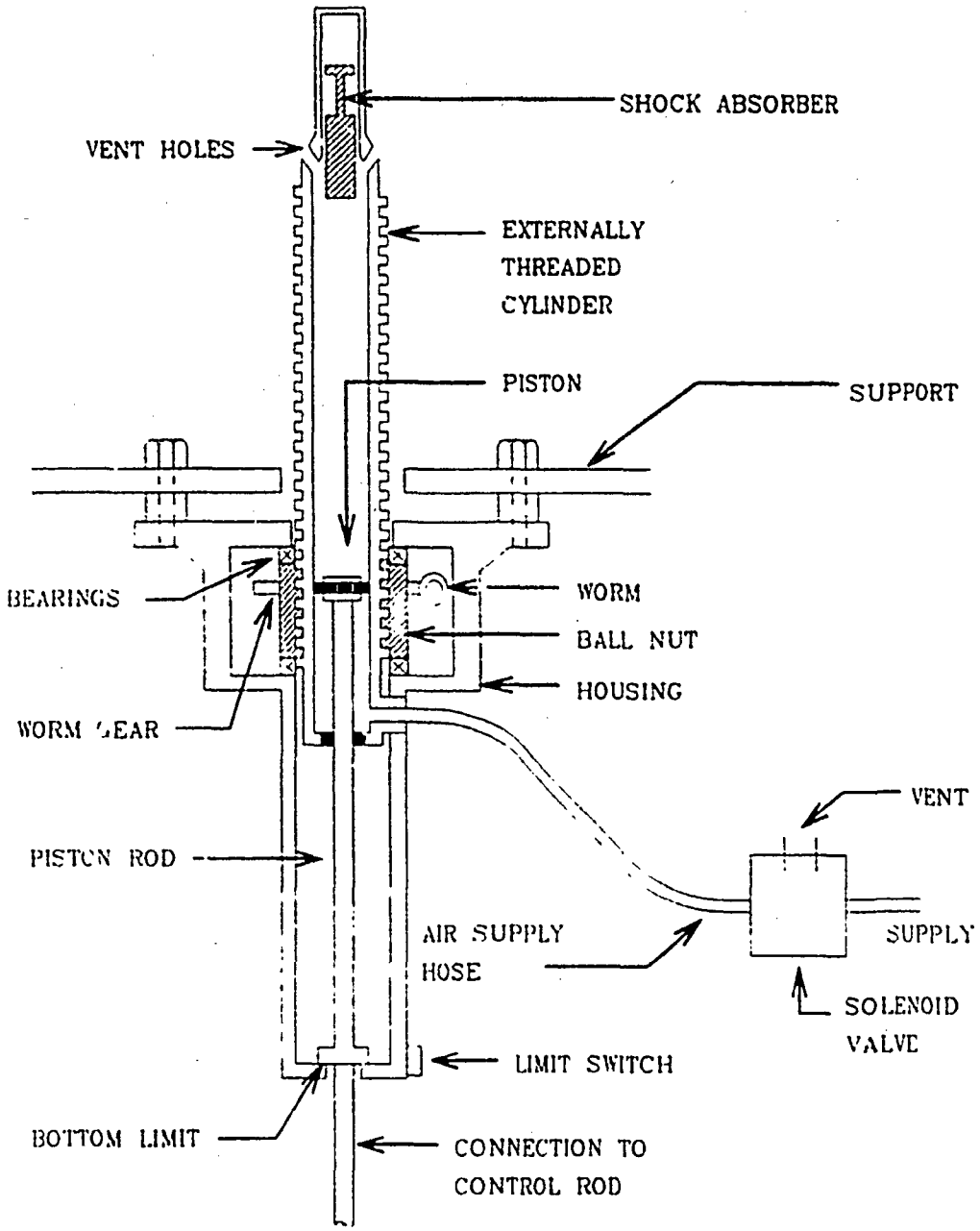

Figure 3-18 Transient Rod Operational Schematic

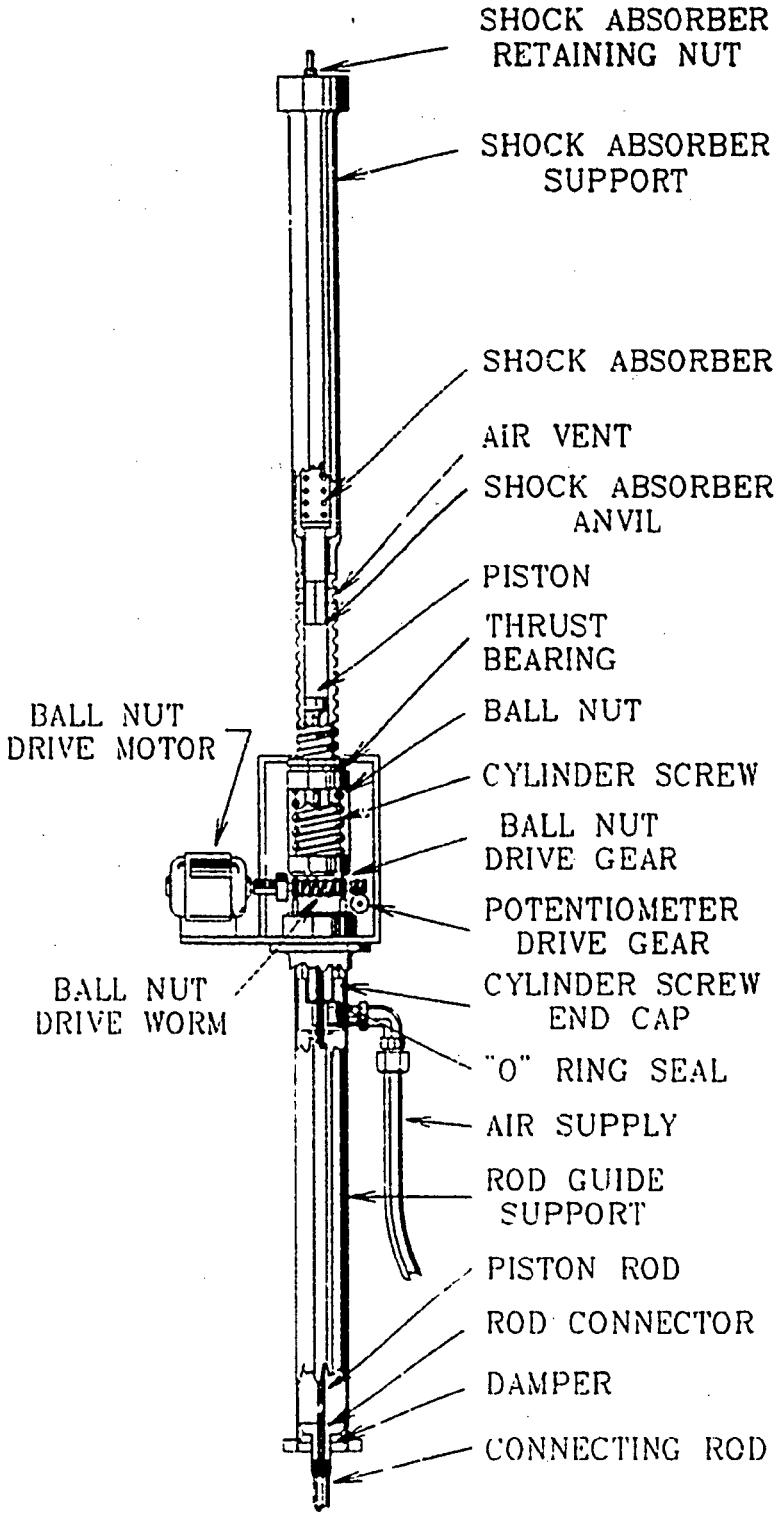

Figure 3-19 Pneumatic-Electromechanical Transient Rod Drive

air, at about 75 psi, is supplied to the lower end of the cylinder from an accumulator tank mounted beneath the center channel assembly, when a three-way solenoid valve located in the piping between the accumulator and cylinder is energized. The compressed air drives the piston upward in the cylinder and causes the rapid withdrawal of the transient rod from the core. As the piston rises, air trapped above it is pushed out through vents at the upper end of the cylinder. At the end of its travel the piston strikes the anvil of an oil-filled hydraulic shock absorber, which has a spring return, and which decelerates the piston at a controlled rate over its last inch of travel. When the solenoid is de-energized by a scram signal or loss of power, the valve cuts off the compressed air supply and exhausts the pressure in the cylinder. This allows the piston to drop by gravity and thereby fully inserting the safety-transient rod into the core in about 1 second.

The extent of the transient rod withdrawal from the core during a pulse is determined by raising or lowering the cylinder. The position of the cylinder determines the distance the piston travels. The rod may be withdrawn from zero to a maximum of 15 inches from the core; however, administrative control is exercised to restrict the travel so that the maximum permissible step insertion of reactivity (1.4 %k or $2.0) will not be exceeded.

The electromechanical portion of the transient rod drive consists of an a-c electric motor, a ball-nut drive assembly, and the externally threaded air cylinder. The threads on the cylinder engage a series of ball bearings contained in a ball-nut assembly mounted in the drive housing. As the ball-nut assembly is rotated by a motor driven worm gear, the cylinder, which is prevented from rotating, moves up or down depending on the direction of the worm gear rotation. The cylinder may be raised or lowered independently of the piston or control rod by means of the electric drive. The distance the transient rod will be ejected from the reactor core is determined by the position of the cylinder. Limit switches actuated by the drive cylinder indicate up and down positions of the cylinder. The rod down position switch is actuated by the piston when it reaches its lower limit of travel. A helipot connected to the ball-nut drive worm gear generates the drive cylinder position indication.

The rod guide support attached to the rod drive housing serves several purposes. An air inlet connection to the cylinder project through a slot in the rod guide preventing the cylinder from rotating. A flanged connector at the lower end of the piston rod, that is used to attach the piston rod to the connecting rod assembly, strikes a damp pad at the bottom of the rod guide support and stops the downward movement of the transient rod. A microswitch is activated when the flange engages its actuating lever and indicates on the instrument console that the rod is in the core.

3.2.8 Detectors

The detectors (Figure 3-20) used are standard commercial units (one fission and two ionization chambers), and are enclosed in seal-welded aluminum cans to provide shielding from spurious noise, complete moisture proofing, and physical support of the detector and the cable. This construction improves reliability and life of the detector assembly Helium leak testing is performed on all assemblies after welding. No plastic or gasket type joints are used in a location where they are subject to radiation.

Electrical connections for each chamber are contained in a 3/4 in. offset aluminum pipe which terminates above the water level at the side of the tank. A flanged, gasketed joint is provided below the offset. Each chamber is positioned adjacent to the core reflector inside an aluminum guide tube attached to the outer edge of the reflector assembly.

3.2.9 Accessories

3.2.9.1 Underwater Light Assembly

Illumination of the reactor core is provided by 300-W lights in three waterproof aluminum housings. An aluminum pipe extending to the top of the reactor tank supports the housing and encloses the electrical wiring.

3.2.9.2 Fuel Element Storage Racks

Fuel storage racks each capable of holding 10 fuel elements are located underwater along the walls of the reactor tank to provide temporary storage of fuel elements. Each rack is 20 in. (50.8 cm) high, 22-1/2 in. (57.2 cm) wide, with 1-5/8 in. (4.1 cm) diameter cutouts, and is made of 16 gauge aluminum. Two 3/4 in. (1.9 cm) diameter, 15 ft (4.6 m) long aluminum rods are used to suspend each storage rack. These rods are fastened at their lower ends to the rack and at the upper ends to brackets on the tank lip angle. To facilitate extra storage, two racks may be attached to the same connecting rods by locating one rack at a different vertical level and offsetting the horizontal position slightly. A minimum of 8 ft of water above the racks will be maintained to provide shielding.

3.2.9.3 Fuel Element Handling Tool

The fuel element handling tool (Figure 3-21) is used for repositioning the fuel-moderator and graphite dummy elements, and the neutron source holder. This

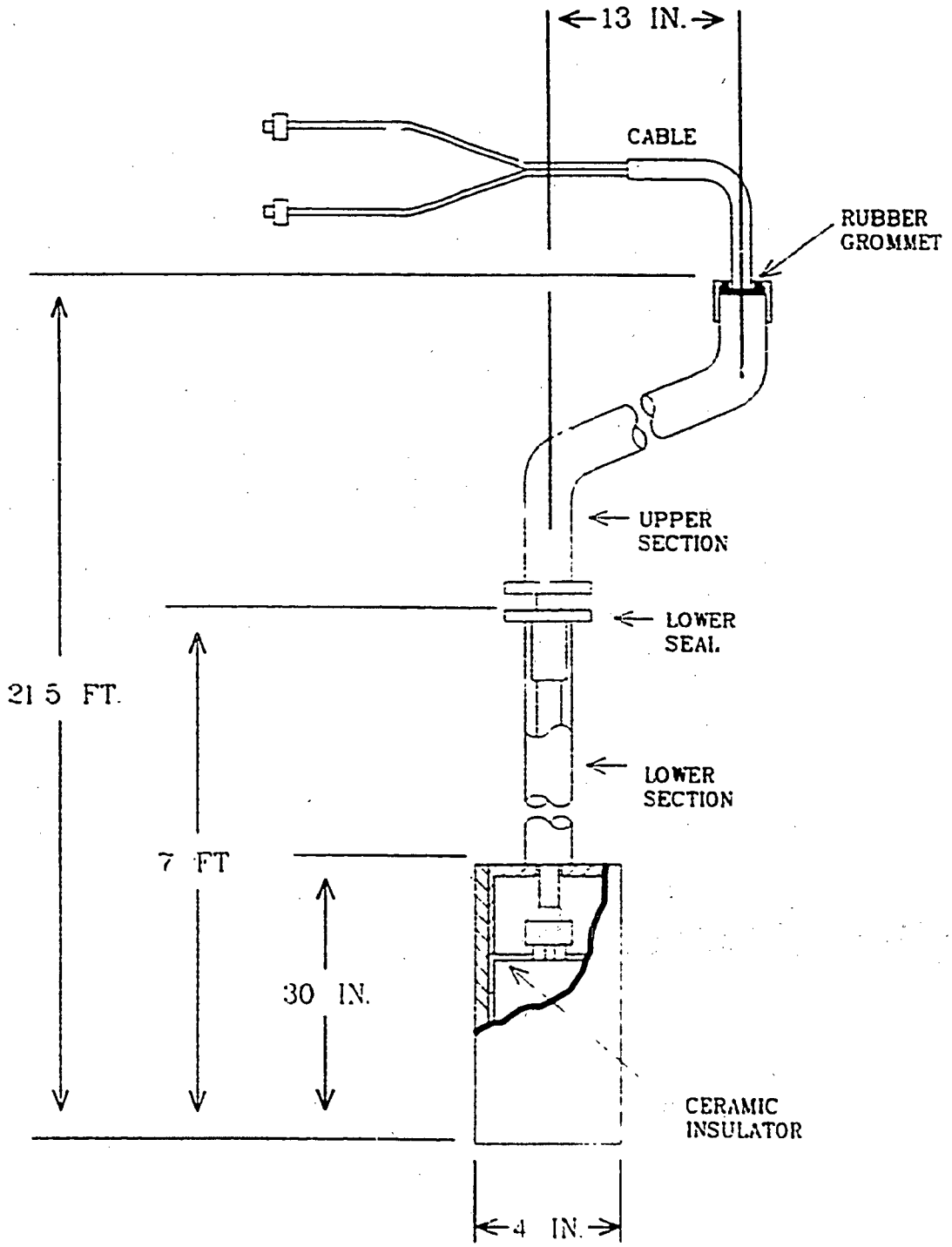

Figure 3-20 Typical Detector Assembly (not to Scale)

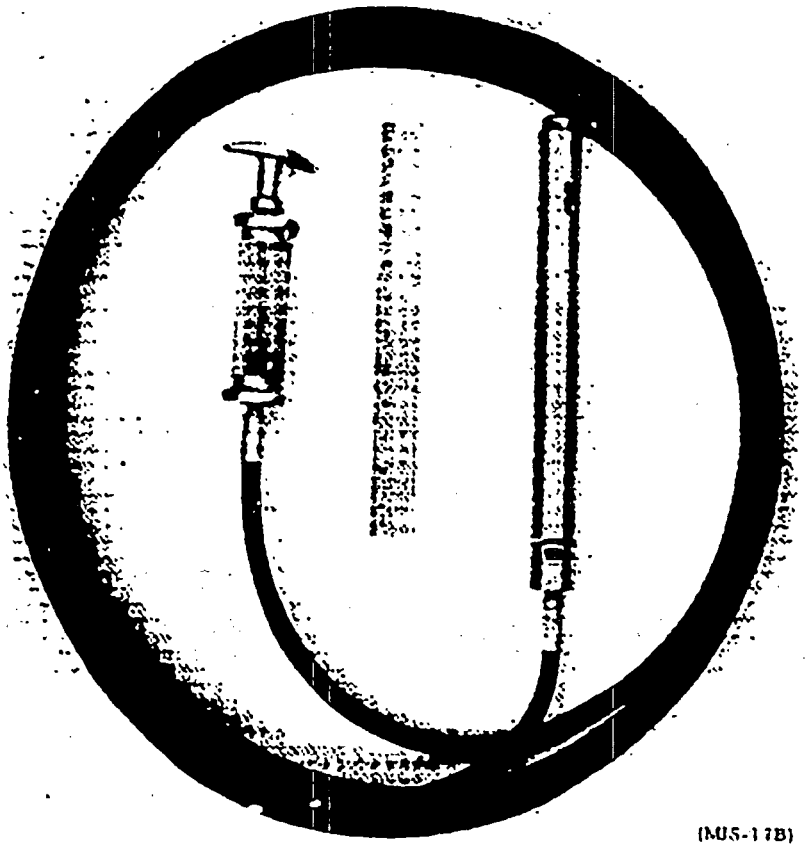

Figure 3-21 Fuel Element Handling Tool

tool is made of stainless steel and consists of a grapple mechanism, a weight, a handle, a grapple release, and a flexible control cable.

3.3 REACTOR THERMAL AND HYDRAULIC DESIGN AND EVALUATION

The characteristics and operating parameters of this reactor have been estimated or extrapolated based on experience and data obtained from existing TRIGA reactors [1-3]. A reactor of the same power and same core-reflector relationship has been operated at Michigan State University from 1967 [2] and was decommissioned in 1989. The maximum licensed steady-state operating power is 250 kW (thermal).

The ATUTR reactor will be operated with natural convective cooling by pool water. Analysis [1] indicates that operation at up to 1900 kW (with an 85 element core and 120 F inlet water temperature) with natural convective flow will not allow film boiling. Therefore, high fuel and clad temperatures that may lead to loss of clad integrity could not occur at 250 kW. The average coolant mass flow is estimated to be about 17500 lbm/hr and the temperature rises from 100 F to about 150 F. The average power density in this core is 3.57 kW/element and each element has a heated surface area of 0.4826 ft^2 (0.0448 m^2). The maximum power density is found by multiplying the average power density by a radial peak-to average power generation ratio of 1.6 and an axial value of 1.25.

The fuel temperature is a limit in both steady state and pulse mode of operation. This limit stems from the out-gassing of hydrogen from U-ZrH fuel and the subsequent stress produced in the fuel element clad material. The U- ZrH fuel with zirconium-hydride ratio of 1.6 is composed of a stable gamma phase ZrH that does not undergo phase transition below 1250 C. The stress produced on the clad and the yield strength of the stainless steel clad are shown in Figure 7.1. The point at which these two curves intersect, 920 C, may be taken as the safety limit, even though it can be shown that the the clad will not be ruptured even for temperatures as high as 1250 C. Measurements show that during a transient, the gas pressure is much lower than predicted by calculations. The adiabatic fuel temperature to be allowed during a transient may be taken as 1150 C. For steady state operation at 250 kW the average and peak fuel temperatures are about 180 C and 265 C respectively. During pulsing operation (1.40 %k) the peak temperature is about 349 C. It is concluded from analysis and experience at several operating facilities that temperatures resulting from normal or abnormal operations are well below safety limits.

3.4 REACTOR NUCLEAR DESIGN AND EVALUATION

The operational loading is about 70 uranium-zirconium hydride fuel elements and a total core loading of about 2.5 kg of U-235. The fuel elements contain 8.5 wt % uranium and are enriched to about 20% in U-235. The approximate U-235 weight per element is about 0.035 kg. The cold clean critical loading is about 64 fuel elements. The effective delayed neutron fraction, β, is 0.007, and the prompt neutron lifetime is $\approx 41\ \mu s$.

The basic parameter which allows the TRIGA reactor system to operate safely with large step insertions of reactivity is the prompt negative temperature coefficient, α, associated with the TRIGA fuel and core design. This temperature coefficient also allows a greater freedom in steady state operation as the effect of unexpected reactivity changes occurring from experimental or other devices in the core is greatly reduced. The main contribution to this temperature coefficient comes from a loss of absorption in the fuel as the fuel temperature is increased. The rise in temperature in the fuel moderator mixture increases the probability for a neutron to be scattered by the Zr-H and to gain energy from the excited state of an oscillating hydrogen atom in the lattice. This increases the probability for the neutrons to escape from the fuel, and the spectrum in the fuel hardens. In water, the neutrons are rapidly rethermalized so that the capture and escape probabilities remain the same. This brings about a shift in core neutron balance, giving a loss of reactivity. In addition, Doppler broadening of U-238 resonances and temperature dependent leakage from the core also result in loss of reactivity. These effects produce a temperature coefficient of approximately 0.01 %k/C, which is rather constant with temperature.

The reactivity associated with the control rods is of interest both in the shutdown margin and in calculations of possible abnormal conditions related to unexpected reactivity insertions. Table 3-4 gives approximate reactivity values associated with a total control rod travel of 15 in. (38.1 cm) in the core.The total reactivity worth of the control system is about 4.81 %k. With the core maximum excess reactivity of 2.25 %k, the shutdown margin with all rods down is about 2.56 %k and with the most reactive rod stuck out is about 0.44 %k ($ 0.63). These values are given for a typical core configuration shown in Figure 3.6 [4]. The maximum reactivity insertion rate for the safety-shim rod is about 0.045 %k/s and that of the regulating rod is about 0.034 %k/s. The safety-transient rod may be removed from the core in 0.1 s producing an average reactivity insertion rate of 14.0 %k/s.

The reactivity worths of fuel element are dependent on their positions within the core. Table 3-5 indicates the values that are expected in this installation.

Table 3-4 Estimated Control Rod Net Worth

Control Rod	Location	%k
Safety-shim	C3	2.12
Safety-transient	D10	1.40
Regulating	E21	1.29

Table 3-5 Estimated TRIGA Fuel Element Reactivity Worth Compared with Water

Core position	%k	Number of fuel positions
B ring	1.07	6
C ring	0.85	12
D ring	0.54	18
E ring	0.36	24
F ring	0.25	30

The estimated reactivity effects associated with the introduction of some of the experiments in the reactor core are given in Table 3-6. The effects of materials not given here must be investigated before insertion into the reactor core.

Table 3-6 Estimated Reactivity Effects Associated with Experimental Facilities

Location	%k
Central thimble, TRIGA fuel vs H_2O	+0.90
Central thimble, void vs H_2O	- 0.15
Pneumatic transfer tube, (F ring) void vs H_2O	- 0.10
Rotary specimen rack, void vs H_2O	- 0.20

Average thermal neutron flux (n/cm^2-s) is expected to be about 1×10^{13} at the central thimble, about 1.75×10^{12} at the rotary specimen rack, and about 4×10^{12} for the whole core.

3.5 SAFETY SETTINGS IN RELATION TO SAFETY LIMITS

Fuel temperature is the main consideration in the operation of a TRIGA system. The temperature of the fuel may be controlled by setting limits on other parameters given below.

a. Maximum licensed steady-state power level – 250 kW (thermal).
b. Fuel temperature measured by thermocouple – 500 C.
c. Maximum reactivity worth of transient rod – 1.4 %k ($2.0).
d. Core inlet coolant water temperature – 50 C.

Maximum steady-state power level is set at 250 kW (thermal), and maximum fuel temperature is set at 500 C and if exceeded the reactor will scram. Administrative limitations are set on the maximum worth of the transient rod as 1.4 %k, and maximum core inlet water temperature is set at 50 C.

These safety settings are conservative in the sense that if they are adhered to, the consequence of normal or abnormal operation would be fuel and clad temperatures well below the safety limits. Because of the conservatism in these safety settings, less restrictive safety system settings could reasonably be assigned at some later date in conjunction with upgrading the reactor to operate at higher steady-state power levels or in the pulsing mode, while maintaining the same fuel and core configuration.

REFERENCES

1. "Safety Analysis Report, TRIGA Reactor Facility, Nuclear Engineering Teaching Laboratory, The University of Texas at Austin", November 1984.

2. "TRIGA Mark I Safety Analysis Report", Michigan State University, June 1984.

3. "SER related to the renewal of the facility license for the research reactor at the Dow Chemical Company", NUREG-1312, USNRC, April 1989.

4. "SER related to the renewal of the operating license for the research reactor at Michigan State University", NUREG-1084, USNRC, August 1984.

4. INSTRUMENTATION AND CONTROL SYSTEM

4.1 CONTROL CONSOLE

The complete operating and protection system for the TRIGA reactor is contained in a typical desk type operating console. The console cabinet is 82 in. (208 cm) long, 40 in. (102 cm) deep, and 40 in. (102 cm) high. It is positioned in the control room such that the operator can easily observe both the reactor experimental area and the console instruments. The electronic modules, logic system, and relays are contained either in pull-out drawers or on swinging doors at the back of the console, to allow easy and complete access to the equipment. This aids in maintenance and adjustment procedures. The meters, switches, and recorder used to operate the reactor are mounted on the console control panels.

A percent power meter, a fuel temperature or log power meter, and a period meter are mounted on the left front panel. Switches to provide calibration and test signals to the various channels are also mounted on this panel.

The center-top panel contains the scram annunciators on the top left side and alarm annunciators on the top right side. A mode switch to select the reactor operation mode (steady state manual, steady state automatic, or pulsing) is located on the lower left side. A percent demand control for use in the automatic mode of operation is located on the lower right side. The important parameters of log and linear power over the entire range are displayed on the same chart paper of the dual-pen strip-chart recorder so that the reactor power may be determined at a later time. Digital rod position indicators for the safety-shim rod, the regulating rod, and the pulse rod cylinder are also mounted on this panel.

The rod control panel consists of a console POWER ON switch, a magnet power key switch, a pulse rod FIRE switch, a linear power multi-position REACTOR POWER range switch, a set of control rod and pulse rod cylinder position adjustment (UP, DOWN) switches, and rod status indicators. The POWER ON switch controls primary a-c power to all circuits except ± 25 V d-c power supply, ion chamber power supply, and bulk water temperature monitor. Current to the magnet power supply and recorder chart drive motor is controlled through the magnet

power key switch. The 15-position linear REACTOR POWER range switch is used in conjunction with the multirange linear power channel. It also provides the calibration and test signals for the linear recorder.

The right front panel contains a percent power meter, a fuel temperature meter, and a temperature meter. The temperature meter reads bulk pool temperature, primary inlet, or primary outlet temperature depending on the position of a selector switch. Calibrate/test switches are also mounted on this panel.

4.2 REACTOR INSTRUMENTATION

The reactor instrumentation consists of the neutron monitoring channels, servo channel, fuel temperature channels and nonnuclear instrumentation. The neutron monitoring channels consist of a wide range log power channel, a multirange linear power channel, and two percent-power channels. All neutron-sensing chambers are sealed in aluminum cans and mounted on the outside of the reflector so that their positions are adjustable vertically to change sensitivity and to calibrate the channels. Table 4-1 summarizes operating ranges and set points of the neutron channels. Figure 4-1 gives the neutron channel operating range.

Table 4-1 Operating Ranges and Set Points for Neutron Channels

Channel	Detector	Range	Set points
Wide range log power	Fission	< source level to 250 kW	2 cps
Multirange linear power	Fission (same as above)	source level to 250 kW	none
Percent Power #1	Ion	1% to 110%	110% (275 kW)
Percent power #2	Ion	1 % to 110 %	110% (275 kW)

4.2.1 Wide Range Log Power Channel

The wide range log power channel consists of a ten-decade NLW-2 [1] channel which covers both log count rate source range and intermediate range. This channel uses counting and Campbelling, or statistical techniques to produce an accurate reading of log power over 10 decades, even in the presence a high gamma

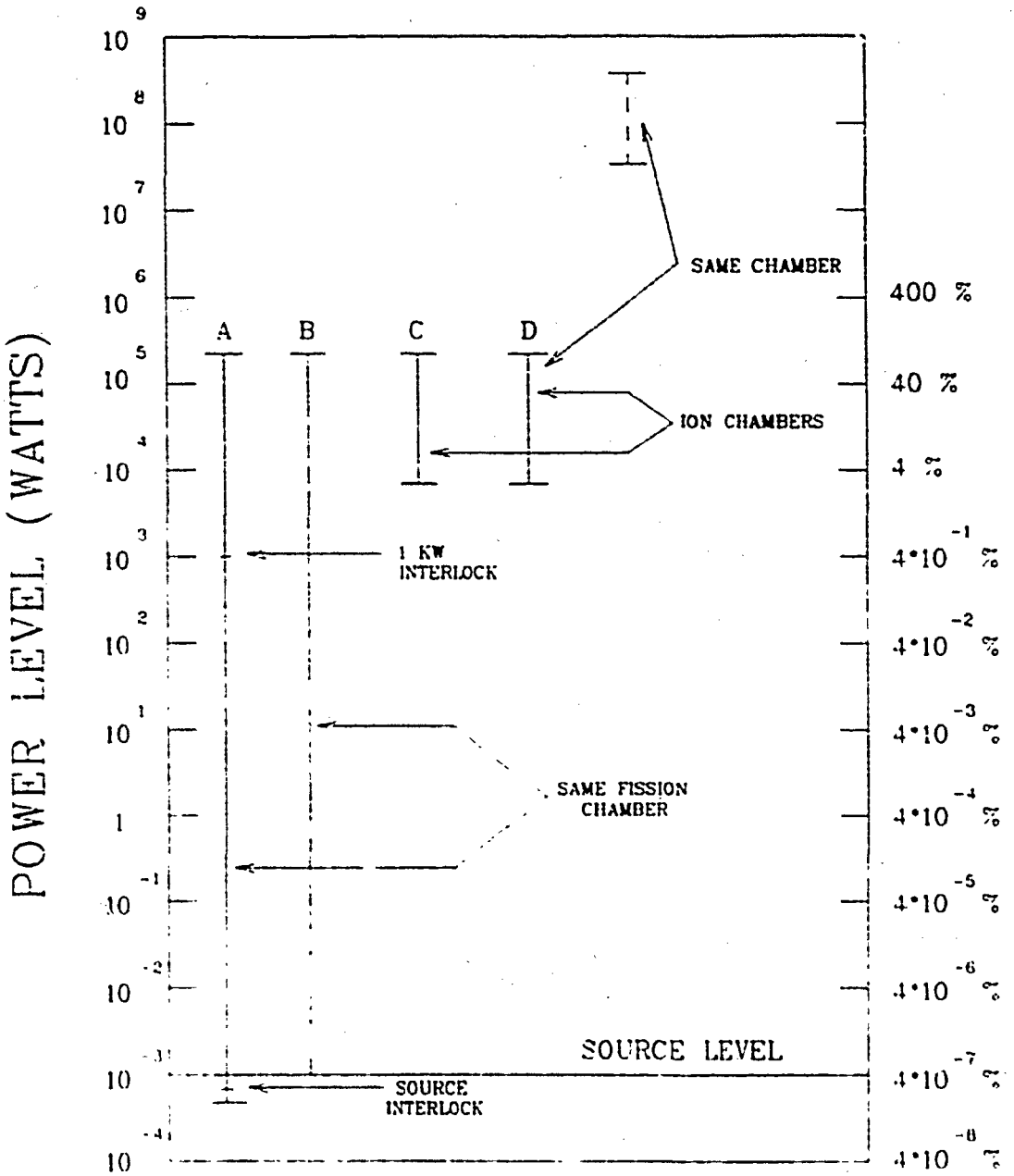

A WIDE RANGE LOG POWER CHANNEL
B MULTIRANGE LINEAR POWER CHANNEL
C % POWER CHANNEL
D % POWER CHANNEL

Figure 4-1 Operating Range of Neutron Channels

background of 10^6 R/hr. It operates from a single fission chamber. The output is displayed on one pen of the dual pen recorder. This channel covers a power range from less than source range to above full power. A bistable trip driven from the output of the wide-range channel provides a source interlock signal to prevent rod withdrawal unless the source level is above a preset limit. An interlock provided in the pulse mode prevents movement of the transient rod unless power is less than 1 kW. Period is also derived from the log power channel and can be used as a scram input to the safety circuit. A period meter indicates reactor period from -30 to $\propto$ to + 3 seconds. This circuit also provides the derivative control for the servoamplifier in the automatic power regulating circuit.

4.2.2 Multirange Linear Power Channel

The multirange linear power channel NML-2 [1] uses the signal from the log wide range channel preamplifier. This channel also uses counting and Campbelling techniques, operates over 10 decades, and is not affected by gamma background up to 10^6 R/hr. It is mounted in the same front panel drawer as the wide range log power channel. Because of buffering, no failure of the linear channel will affect the correct operation of the log power channel. This channel covers a range from source level to full power. The range switch has two ranges per decade to provide accurate power measurement. The output is recorded by the second pen of the dual channel recorder. It also furnishes power level information to the automatic regulating servochannel.

4.2.3 Percent Power or Safety Channels

The two safety channels are all solid state, high reliability current amplifiers which obtain their signals from two ion chambers. Both channel amplifiers feed solid state bistable trip circuits and percent power meters. Power indication is provided from a few percent to 110 % of full power. Scrams are set at 110% of full power on both channels. The two safety channels are mounted in separate drawers on either side of the console and are completely independent and redundant.

In the transient mode, one of the percent power channels is connected to a peak flux (nv) circuit which measures the neutron flux pulse height and records it on the linear power recorder.

4.2.4 Servo Channel

The servo channel consists of the servoamplifier, power demand control unit, and the regulating rod drive motor. In the steady-state automatic mode of operation the servo channel operates as an automatic reactor control system that regulates the

reactor power to a preset value (1 W to 250 kW) established by the operator. A comparator circuit in the servo amplifier compares input signals from the power demand potentiometer and power information from the the multirange linear power channel and adjusts the regulating rod in the appropriate direction to compensate for any difference in power signals. This servo system and regulating rod drive use tachometer feedback from the rod drive to make a high performance servo without overshoot. The period information from the period channel automatically limits the maximum rate of change in reactor power to a preset period of 30 s.

4.2.5 Fuel Temperature Channel

There are two fuel temperature channels connected to two thermocouples in the fuel elements. Both channels are connected to meter readouts and provide an indication of fuel temperature in all three modes of reactor operation. In the transient mode of operation the log power recorder is disconnected from the log power circuit and is connected to read the output of a fuel element thermocouple, thus giving a recording of fuel temperature. The recorder is not fast enough to follow the initial rise of the temperature of the fuel element, but it will correctly record the maximum fuel temperature which is reached a few seconds after the pulse is completed. Both channels provide scram signals when the fuel temperature exceeds a preset value, normally set at 500 C. Both channels are provided with test switches on the front panel to allow check-out of the fuel temperature scram circuits.

4.2.6 Nonnuclear Instrumentation

Instruments to measure other process variables such as bulk pool temperature, pool inlet and outlet temperatures, pool level, primary pressure, and conductivity at the demineralizer inlet and outlet are described in section 5. Radiation monitoring instrumentation is described in section 10. Displays for these are mounted on a panel located adjacent to the reactor console.

4.3 REACTOR CONTROL SYSTEM

The control of reactor flux is accomplished by the use of control rods. The control rods are moved through the operation of the motors which control the safety-shim rod, regulating rod, pulse rod cylinder, and the operation of the pneumatically driven pulse rod. Manual rod control is accomplished by the lighted UP and DOWN pushbuttons on the rod control panel. In the automatic mode of operation the regulating rod is moved by a servo channel automatically. The annunciator light under the push-button switch illuminates when the rod reaches the full-out (UP) or full-in (DOWN) position. Safety-shim and regulating rod position may

be determined by a digital position indicator, connected to helipots, accurate to within 0.2%. The CONT side of the double push-button CONT/ON switch indicates contact between the control-rod assembly armature and the control-rod drive electromagnet. The ON side of the switch indicates that the electromagnet power is on. Depressing any one of the CONT/ON push- buttons will interrupt the current to that magnet and will extinguish the magnet current ON indicator. If the rod is above the down limit, the rod will fall back into the core and the CONT light will be extinguished until the magnet is driven to the down limit where it again contacts the armature. Releasing the button closes the magnet circuit, and the magnet current is reset. By pushing the scram bar all rods may be inserted simultaneously in a manual scram.

The transient rod cylinder is moved UP and DOWN using lighted pushbutton switches. The transient rod is moved up either pneumatically using the FIRE button or electromechanically by moving the rod cylinder drive. The position of the cylinder and the DOWN position of the rod are also indicated at the console.

Several interlocks prevent the movement of the rods in the UP direction:

1. Scrams not reset,
2. Any calibrate or test switch on,
3. Magnet not coupled to armature,
4. Source level below minimum count rate,
5. Two UP switches depressed at the same time,
6. Mode switch in PULSE position (An interlock prevents the withdrawal of all rods except safety-transient rod),
7. Mode switch in PULSE position (An interlock prevents the withdrawal of safety-transient rod if the power level is greater than 1 kW),
8. Mode switch in STEADY-STATE MANUAL OR AUTOMATIC position (An interlock prevents the withdrawal of safety-transient rod unless transient rod cylinder is down).

There is no interlock inhibiting the movement of the rods in the DOWN direction except in the case of the regulating rod while in the AUTOMATIC mode

4.3.1 Modes of Operation

The reactor may be operated in three different modes: steady-state manual, steady-state automatic, or pulse.

4.3.1.1 Steady-State Manual

This mode is used for reactor operations from source level to full power, for reactor startup, change of power level, and steady-state operation. With all the rods in, the safety-transient rod is withdrawn from the core first, and in effect, becomes a safety rod. Other rods are withdrawn slowly by manual control until the desired power level is reached. The safety-shim and regulating rods may be dropped by pressing the CONT/ON buttons. Pressing the scram bar inserts all rods simultaneously. Figure 4-2 shows the integration of the control and safety circuits during steady state manual or automatic operation.

4.3.1.2 Steady-State Automatic

This mode of operation may be used from about 1 W to about 100% power for automatic operation of the reactor at a preset power level during long-term power runs. All of the instrumentation, safety, and interlock circuitry for the manual mode applies to, and is in operation, in this mode. However, the regulating rod is now controlled automatically in response to a power level and period signal by means of a solid state servo amplifier. Reactor power level is compared with the demand level set by the operator. The difference is used to bring the reactor power to the demand level on a fixed preset period. The demand level is determined by the range switch position and the percent demand potentiometer. The period signal fe[illegible] the servo amplifier allows power level changes within reactivity limits of the re[illegible]ng rod to be made automatically on a constant period. Limit switches inhibit the servoamplifier control when the regulating rod reaches the down limit.

4.3.1.3 Pulse

This mode is used to produce short duration pulses of high peak powers. A maximum step reactivity of 1.4 %k ($2.) may be inserted to produce the pulse. In the steady-state mode the reactor is made critical by withdrawing only the safety-shim and regulating rods. The safety-transient rod is left fully inserted in the core. After a moderate power level of less than 1 kW is established, the mode switch is changed to the pulsing mode so that the reactor can be pulsed. When the switch is turned to the pulsing mode, all the low-level power monitoring channels are disconnected and made inoperative. The ion chamber used in one of the percent power channel provides signal for the peak reading and memory circuit (nv circuit) which measures the peak power (nv) of the pulse. The nv circuit records the peak pulse after a few seconds of the pulse on the linear power recorder connected to it during the pulse mode of operation. Only the transient rod can be moved during pulsing operation. In this mode, the transient rod is reinserted after a preset time delay

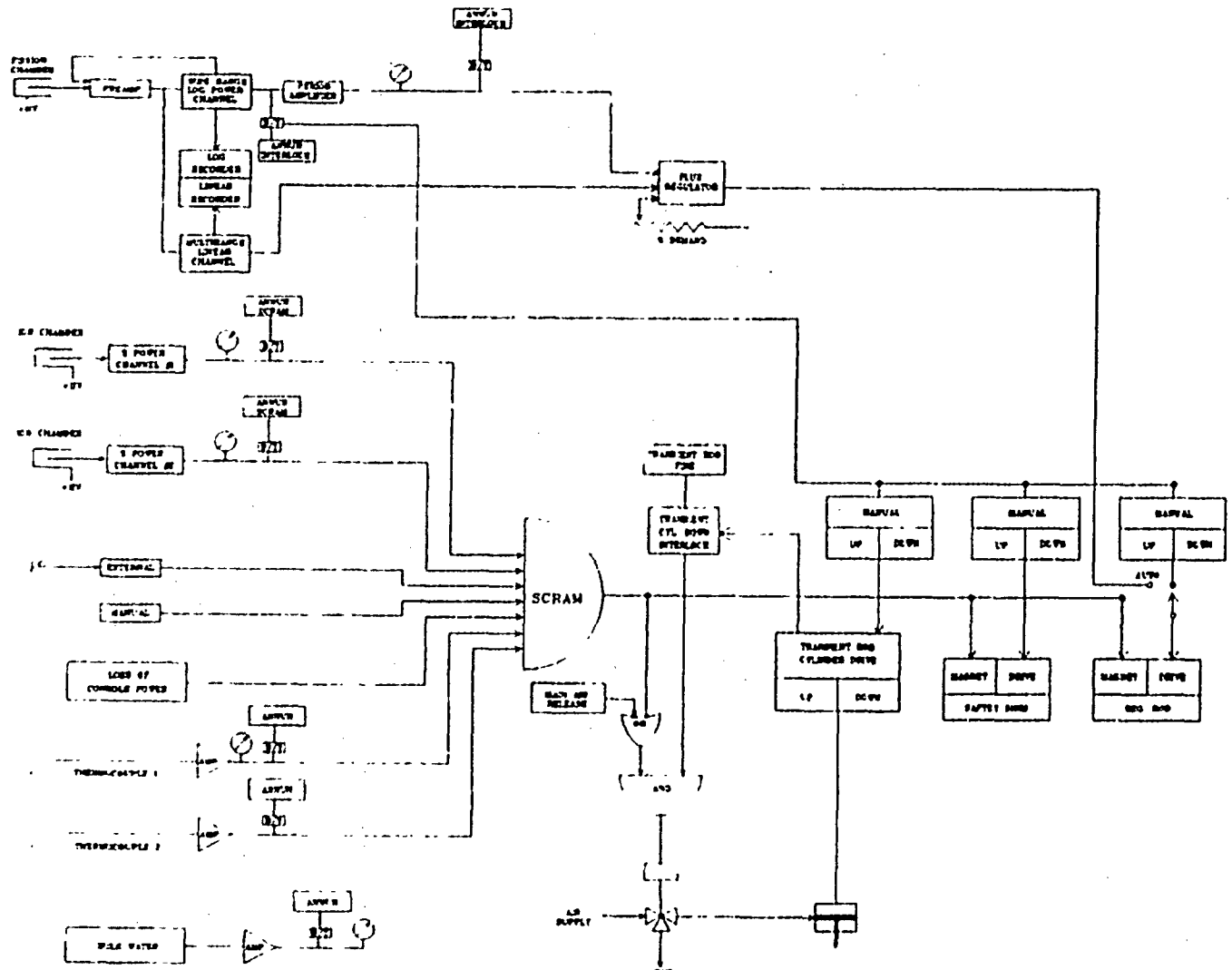

Figure 4-2 System Block Diagram, Steady-State Manual or Automatic operation

(15 s). In addition, fuel temperature is recorded on the dual pen recorder, and the two adjustable fuel temperature scrams are in effect.

An nvt circuit will integrate and store the total energy under the pulse. This circuit receives an input from the same detector as the nv circuit and displays the nvt on a meter. A block diagram of the control and safety circuitry during the transient mode is shown in Figure 4-3.

4.4. REACTOR SAFETY SYSTEM

The reactor safety system prevents reactor conditions from deviating beyond safe limits and mitigates the consequences if the safe limits are exceeded. A reactor protective action interrupts magnet current to the safety-shim and regulating rods and releases air pressure to the safety-transient rod resulting in the immediate insertion of all rods. All scram conditions are indicated automatically by the annunciators located in the control console. Appropriate checks, tests, and calibrations are provided to verify the operability and satisfactory performance of the scram functions. The following conditions will result in the immediate insertion of all rods. These represent the minimum safety channels required for operation.

1. Power on one of the two percent power (safety) channel exceeds 110% of the full power (275 kW) during steady state operation and power on one percent power channel exceeds 110% of full power during pulsing operation.
2. High voltage power supply to the fission or ion chambers is less than 90% of the normal operating voltage.
3. Fuel temperature measured by one of the two thermocouples is greater than 500 C during steady state or pulsing operation.
4. Loss of magnet current.
5. Loss of console power.
6. Manual scram may be initiated by pressing the console scram button, turning the magnet current key switch off, or by activating an optional external scram.

The following conditions cause an alarm which is visually and aurally annunciated at the console. Manual scram may be initiated if necessary.

1. Bulk pool temperature above 50 C.
2. Pool level not within 0.5 ft of normal operating level.

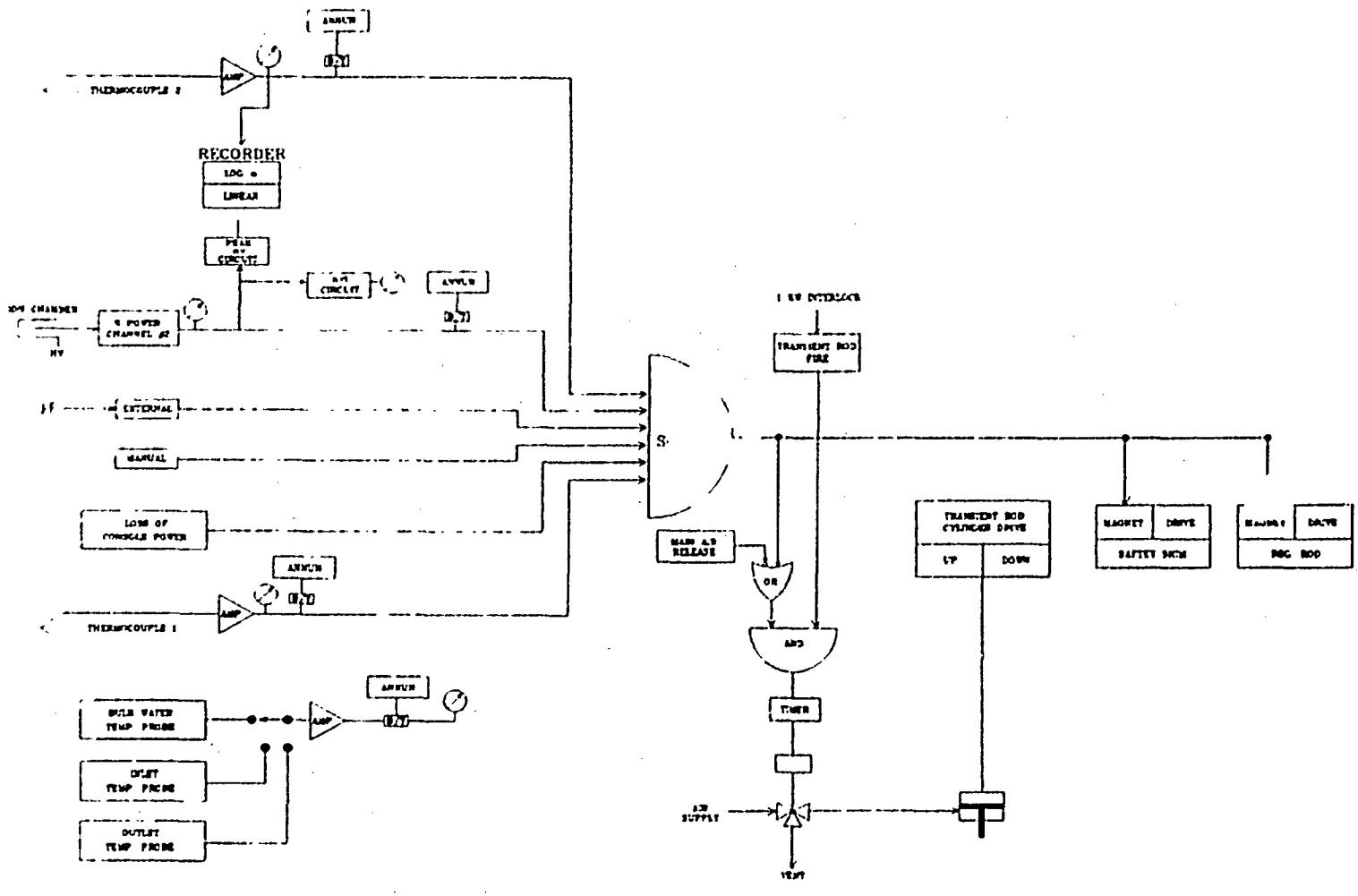

Figure 4-3 System Block Diagram, Pulsing Operation

3. Pump pressure less than 90% of normal operating pressure which initiates pump trip.
4. High radiation level (see section 10).

4.5 DESIGN EVALUATION

The TRIGA reactor console has developed through the successful operation of many installed facilities throughout the world. The instrumentation system provides reliable nuclear and temperature measurements through redundant and overlapping channels. Reactor control systems provide safe startup, operation and shutdown of the reactor. The redundant safety system is sufficient to shut down the reactor automatically during an abnormal condition.

REFERENCES

1. G. A. Technologies, private communications.

2. "TRIGA Mark I Safety Analysis Report", Michigan State University, June 1984.

3. "Safety Analysis Report, TRIGA Reactor Facility, Nuclear Engineering Teaching Laboratory, The University of Texas at Austin", November 1984.

4. "SER related to the renewal of the operating license for the research reactor at Michigan State University", NUREG- 1084, USNRC, August 1984.

5. "SER related to the renewal of the facility license for the research reactor at the DOW chemical company", NUREG 1312, USNRC, April 1989.

6. "Description of a typical TRIGA research and training reactor instrumentation and control console", INS-2, General Atomics, January 1977.

7. "100 kW TRIGA Mark I Reactor and Support Services", TYP 22A, GA Technologies, June 1977.

8. Hendrickson, R. A., R. A. Danofsky, A. F. Rohach, D. M. Roberts, "Safety Analysis Report for the Training Reactor UTR-10", ISU-ERI-Ames 82418, Iowa state University, August 1981.

5. REACTOR WATER COOLANT AND PURIFICATION SYSTEMS

The reactor is designed for operation with cooling provided by natural convective flow of demineralized water in the reactor pool. Reactor pool water is cooled by forced circulation through the tube side of a heat exchanger. The shell side is cooled by chilled water. The water cooling and purification system is located above grade on the south wall of the reactor room.

The primary function of the cooling system is to dissipate the heat generated in the reactor. Suitability of natural convective type cooling for this reactor has been demonstrated by numerous TRIGA installations throughout the world. In addition, approximately 20 ft (6.1 m) of water above the core provides vertical radiation shielding. The cooling system also provides flow through a diffuser to increase the nitrogen-16 (N-16) decay time.

A water purification system associated with the coolant system maintains low conductivity of the water to minimize corrosion of all reactor components, particularly the fuel elements. It also reduces the radioactivity in the water by removing nearly all particulate and soluble impurities. A third function of the purification system is to maintain optical clarity of the pool water.

5.1 PRIMARY COOLING SYSTEM

Principle components of the primary cooling system are shown in Figure 5-1. It consists of the aluminum reactor pool tank, the primary pump, heat exchanger, associated valves and piping, N-16 diffuser, temperature, pressure, and flow probes, or monitors.

Suction of water from the pool is provided by a bulk flow inlet that extends no more than 6.6 ft (2 m) below the top of the reactor tank and a limited flow inlet that provides water surface skimming. A centrifugal type pump draws the coolant and forces it through the tube side of the heat exchanger at 150 gpm. Return of cooled water to the reactor pool is provided by discharge through a diffuser nozzle above the reactor core.

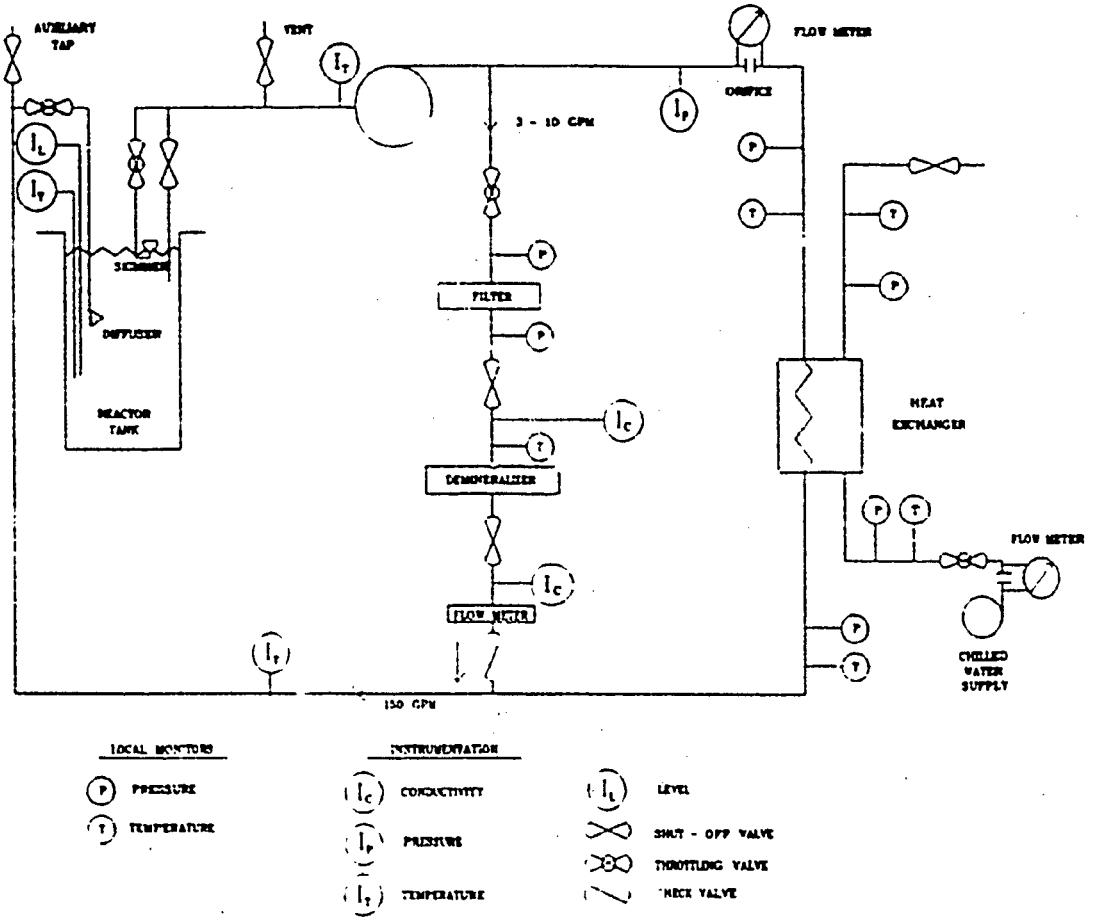

Figure 5-1 Primary Cooling and Purification System

Nitrogen-16 is produced through the (n, β) reaction with the oxygen present in the reactor water. Since the half life is only 7 seconds, the transport time from core to surface permits the decay of much of the N-16. A water jet created by the diffuser nozzle above the reactor core increases the diffusion of the core convective coolant column and thus increases time for the decay of the N-16. Flow through the diffuser nozzle is adjusted by a valve near the edge of the tank.

Siphon breaks provided by 0.5 in. (1.27 cm) holes located on both suction and discharge lines approximately 1.6 ft (0.5 m) below normal water level prevents accidental siphoning of reactor pool water.

The heat exchanger is a tube and shell type. It provides heat removal of 250 kW from the reactor tank water. All parts in contact with the demineralized primary water are made of stainless steel. A positive pressure difference of 1 psi (7 kPa) between the shell side outlet and the tube side inlet is designed to prevent the leakage of primary pool coolant into the secondary water system.

All components in the water system are made of materials compatible with the aluminum in the reactor system. The coolant lines are 3 in. aluminum piping. Ball valves in the system are of aluminum construction, with synthetic rubber seals. Gate and globe valves are of aluminum construction and have teflon packings. Specifications for the reactor coolant system components are listed in Table 5-1.

5.2 WATER PURIFICATION SYSTEM

The water purification system is shown in Figure 5-1. It consists of a filter, a demineralizer, and a flow meter connected by pipes and valves. Conductivity probes are also provided in the line. A portion (3-10 gpm) of the primary flow is diverted through the purification loop during the operation of the cooling system. A check valve prevents backflow into the purification loop.

The filter element is a fiber cartridge (25 micron) that removes insoluble particulate matter from the reactor water system. The cartridges will be replaced when they become clogged. Pressure gauges on both sides of the filter measure the pressure drop across the filter as a means of determining the extent of filter clogging. Removal of solid particles from the water extends the life of the demineralizer resin.

The demineralizer removes soluble impurities from the water in order to maintain the conductivity of the water at a sufficiently low level to prevent corrosion of reactor components. The mixed-bed type demineralizer contains approximately

Table 5-1 Reactor Coolant System Design Summary

Reactor Tank	
Material	Al Plate (6061)
Thickness	1/4 in. (0.635 cm)
Volume (max)	1964 ft^3 55.6 m^3
Coolant Lines	Al 3.0 in. (7.62 cm) dia
Valves	Al
Coolant Pump	
Type	Centrifugal
Material	Stainless steel
Capacity	150 gpm 9.46 L/s
Heat Exchanger	
Type	Shell and Tube
Shell material	Carbon steel
Tube material	304 stainless steel
Capacity	250 kW
Shell flow rate	150 gpm
Tube flow rate	150 gpm
Typical Parameters	
Tube inlet	100. F 20 psi
Tube outlet	88.7 F 10 psi
Shell inlet	45.0 F 45 psi
Shell outlet	56.3 F 25 psi

4 ft^3 of anion and cation resin. The negative ions in the water are replaced by hydroxyl (OH) ions and the positive ions by hydrogen (H) ions. The OH and H combine to form water. Depleted resin is removed manually and is not regenerated.

Water at the surface of the tank flows over a floating skimmer which collects floating particles. Larger particles are retained by a plastic screen and smaller particles are collected in the filter cartridge.

5.3 PRIMARY COOLANT MAKEUP SYSTEM

Primary coolant loss by evaporation is estimated [2] to be about 150 gallons per month. Distilled water is added manually into the pool once a month. There is a separate water inlet from the city water, which is independent of the primary system, to the pool. This could also serve as an emergency coolant makeup source.

5.4 SECONDARY COOLING SYSTEM

A 300 ton (1055 kW) water chiller provides chilled water at 45 F and 45 psi to cool the secondary side of the heat exchanger. At reactor rated power the heat removal capacity required is about 24% of the chilling system capacity.

5.5 WATER SYSTEM INSTRUMENTATION

Several monitoring sensors are installed to allow remote readout of water system parameters in the reactor control room. Other system parameters are indicated by local monitoring devices. Parameter monitoring points are illustrated in Figure 5-1. The parameters that are considered part of the water system instrumentation are presented in Figure 5-2.

Indication of the reactor pool status is determined by two sensors located in the pool. Pool level and bulk pool temperature sensors in the pool are monitored in the control room. An annunciator and alarm indication are generated by high or low pool levels and by high pool temperatures.

Cooling system function is indicated by two temperature probes, one on the pool suction line and one on the pool discharge line. Both temperatures are observed on the bulk pool temperature meter by actuation of a switch at the console. Typical temperature probes used are resistance temperature detectors (RTD's).

Water quality is determined from two temperature compensated conductivity cells in the purification loop. The cells are located on inlet and outlet lines of the demineralizer and readouts located in the control room. Conductivity cells are designed with platinum electrodes shielded by glass. A wheatstone bridge circuit and display in the control room is connected to the cells by a switch for selecting inlet or outlet conductivity.

Heat exchanger operation and coolant flow indication is generated from pressure measurement in the primary coolant line. The pressure sensor is monitored to provide a trip to stop the coolant pump on loss of flow pressure. An alarm indication from the pressure loss caused by flow loss is transmitted to the

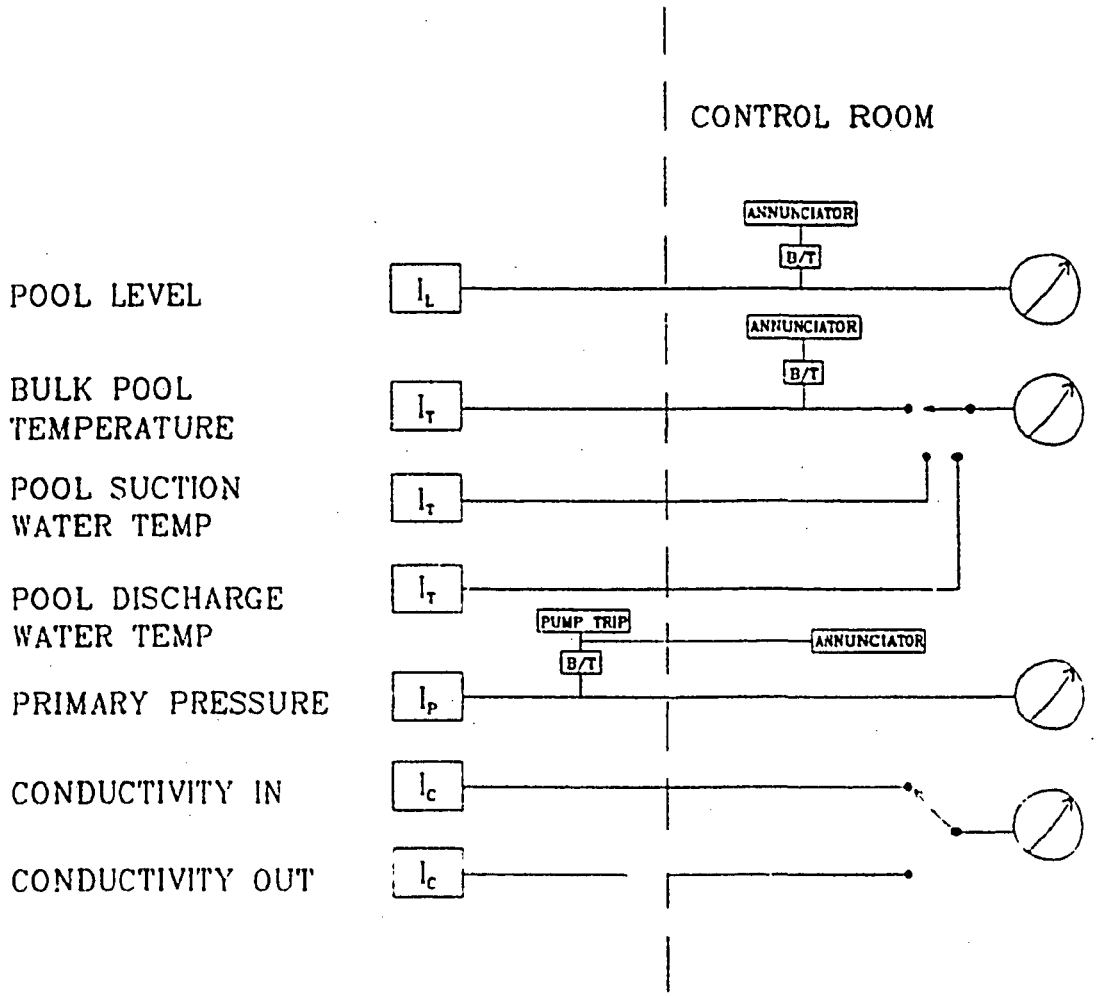

Figure 5-2 Water System Instrumentation

control room. Flow is measured by monitoring the differential pressure across an orifice plate, and is displayed locally. The pressure differential across the primary and the secondary side of the heat exchanger is monitored by local pressure monitors. There is no trip provided if this pressure differential is lost. However, the pool level gives an indirect indicaton of and leakage between the primary and secondary sides.

Several water system parameters are measured by local pressure or temperature sensors in the system lines. Both temperature and pressure probes are located on the inlet and outlet lines, of the pool water side (primary) and chilled water side (secondary), of the heat exchanger. A local indication of flow in the coolant loop is provided by the pressure drop across an orifice in the flow path. Purification loop flow is measured by an in-line flow meter. Water pressure before and after the filter in the purification loop is measured for indication of filter condition.

5.6 WATER SYSTEM DESIGN EVALUATION

The water system including the reactor pool and the external cooling and purification loops have similar design features as used in many other operating TRIGA facilities. The demonstrated capability and integrity of this system provides assurance that the coolant system will perform its function properly and safely.

Availability of pool water for cooling and shielding is assured by designing the system with siphon breaks on suction lines and discharge lines within 1.6 ft (0.5 m) of the normal pool level. Pool level is also monitored and provides indication and alarm in the reactor room if pool level is too high or low. Greater losses of pool water are extremely improbable, although they could conceivably be initiated by rupture of the reactor tank. As shown in the loss of pool water accident analysis, even with complete loss of pool water fuel clad integrity is not threatened.

Adequacy of reactor cooling is assured by the large amount of cooling capacity inherent in the reactor pool volume as well as the capacity of the external cooling circuit. At a flow rate of 150 gpm of chilled water at 45 F (7.22 C) the heat exchanger is capable of removing 250 kW. Without external cooling or other heat loss the bulk pool temperature will rise approximately 3.9 C in one hour of operation at a steady-state power level of 250 kW. At this rate the reactor may be operated for about 3.2 hours without cooling before the temperature would rise from 37.8 C (100 F) to the maximum bulk pool temperature of 50 C (122 F). If the capacity of the heat exchanger is reduced to 100 kW, the heating rate is 2.3 C per hour and the reactor may be operated for about 5.2 hours before the temperature

reaches 50 C. The presence of fouling in the heat exchanger is considered minimal based on the purity of the primary and secondary fluids.

Experience with this purification equipment in other TRIGA systems has shown that coolant conductivity can be easily maintained at levels of less than five micromhos per cm using the materials contained in the coolant system design. Furthermore, this experience has shown that no apparent corrosion of fuel clad or other components will occur if the conductivity of the water does not exceed five micromhos per cm when averaged over a 30-day period.

Control of radioactivity in the coolant is provided by the purification system. Should radioactivity be released from a clad leak or rupture of an experiment, detection of the release would be signaled by the continuous air monitor or the reactor room area monitors. Based on coolant transport time calculations in the safety analysis section, these monitors should register an increase in coolant radioactivity within 60 seconds of the release. The transport time is estimated from the time it takes exposed coolant to reach the surface. A water activity monitor or a GM detector may be installed to provide an alternate indication of the radioactivity.

REFERENCES

1. "Safety Analysis Report, TRIGA Reactor Facility, Nuclear Engineering Teaching Laboratory, The University of Texas at Austin", November 1984.

2. "TRIGA Mark I Safety Analysis Report", Michigan State University, June 1984.

6. FACILITY DESIGN

The TRIGA Mark I reactor is located in the Center for Energy Studies building. Most of the building design is determined by criteria that are not necessarily directly related to the reactor. However, several design features are incorporated to assure safe facility operation and effective use of facility equipment.

Structural engineering design of the building is specified by standard university procedures developed from the Uniform Building Code and the State Building Code. All elements are designed for seismic activities specified for zone 1 conditions. The provisions of the Life Safety Code and National Fire Protection Code are included in building features.

The building site is located above a sub-surface that will accommodate substantial loads (1690 kg/m^2). The building foundation is composed of poured concrete piers with a concrete slab on compacted fill. The building superstructure is constructed of reinforced concrete. Exterior structure walls are of masonary construction.

Building orientation is shown in [illegible]re 2-1 and the floor plan is shown in Figures 6-1. Total floor space of the facility is ap[illegible]ately 700 m^2 (7535 ft^2).

Are[illegible] office space, general laboratory areas, specialized labor[illegible] [illegible]upport areas, and the reactor facility. Shop areas for mechanica[illegible] and laboratories for radiological measurements are operated with[illegible] building for activities of both the reactor operation, education, and applications in engineering.

6.1 DESIGN BASES

The facility structure is designed to provide protection for the fuel elements, special nuclear materials, and the reactor. The physical containment also controls the release of radioactive materials during routine operation or potential accident conditions and thereby controls the exposure of operating personnel and the public to radioactive materials or its release. Design of access points and interior walls are specified for security control, fire control, and ventilation control. Penetrations,

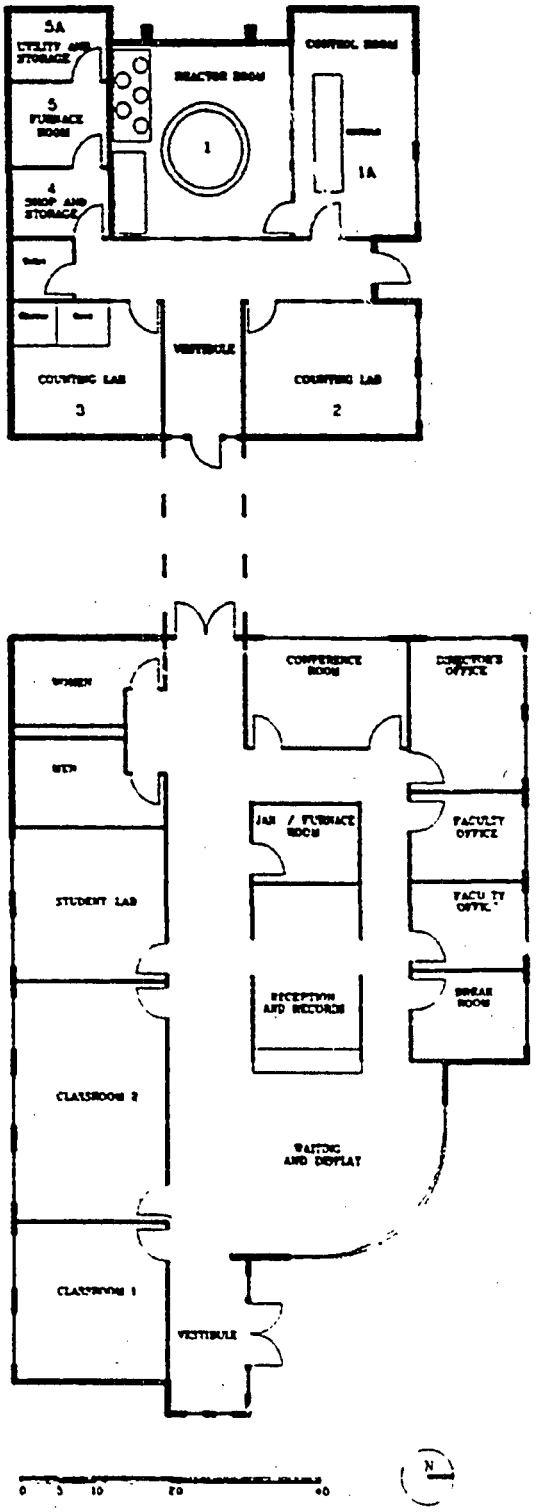

Figure 6-1 Floor Plan for the Center for Energy Studies

other than doors into the reactor room and control room, are limited in size and are sealed to limit air leakage.

6.2 REACTOR FACILITY

6.2.1 Physical Design

The TRIGA Mark I reactor is to be housed in Room 1 (Reactor Room) of the western section (Reactor Building) of the proposed Center for Energy Studies building at Arkansas Tech University. Phase I of the construction includes only the reactor building. The reactor building (15 m × 17 m × 7 m) is a concrete structure with block walls. In addition to the reactor and control rooms (Rooms 1 and 1A), the building houses counting labs (Rooms 2 and 3), shop and storage area (Room 4) and utility rooms (Rooms 5 and 5A). The reactor building has a heat pump type heating and cooling unit.

The reactor room has 7.5 m × 7.5 m floor space and a height of 7 m. It is enclosed by concrete blocks and the walls are painted. This room contains the reactor, reactor coolant system, water purification system, and storage pipes for storing fuel. Access to the reactor room is through the north door from the control room or through the shutter door on the west side. Both doors can be sealed air tight. The reactor vessel is located below grade about 2 m from the south and east walls of the reactor room. The cooling and purification systems are located above grade near the south wall to the east side. The fuel storage pipes are located below grade near the south wall to the west side (Figure 6-2).

The control room (Room 1A) is to the north side of the reactor room separated by a glass wall and has 7.5 m × 5 m floor space. Access to this room is through the east door. This room contains the control console and a reactor records cabinet.

One of the counting Labs (Room 3) contains the receiver/sender end of the pneumatic transfer system. The tubes pass through a duct in the floor. Outside the reactor room they pass through a duct under a 2 ft thick concrete slab to provide shielding, if the radioactive sample gets stuck in that region. The receiver/sender end of the pneumatic tube is locked to provide access control.

6.2.2 Fuel Storage Facilities

Storage facilities for the fuel are provided inside and outside the reactor pool. Most routine fuel storage is intended to be inside the reactor pool. The storage outside the reactor pool is for isolation of damaged fuel elements, tem-

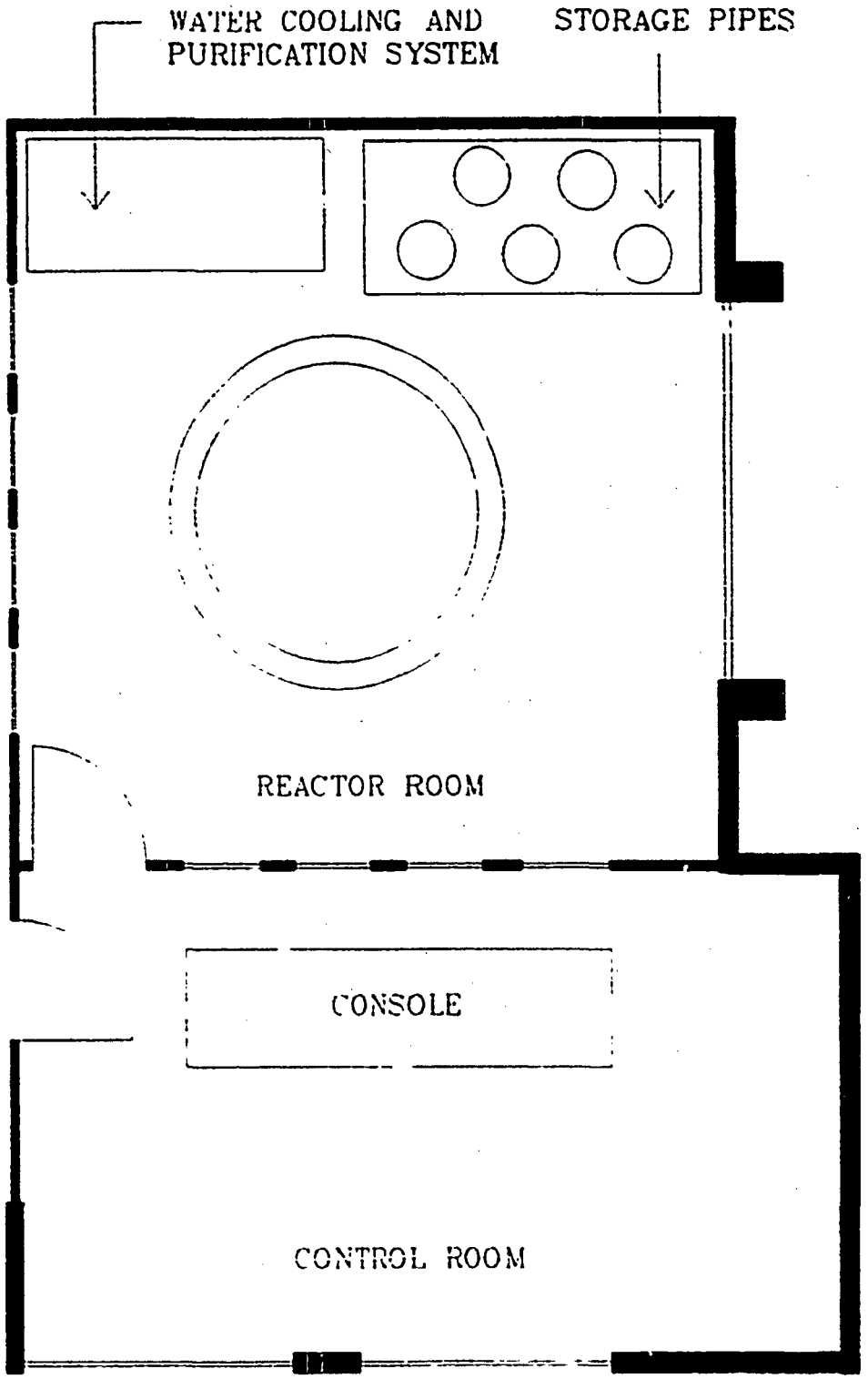

Figure 6-2 Reactor and Control Rooms

porary storage of elements transferred to or from the facility, storage of new or expended fuel, and emergency storage. Storage racks inside the pool may also be used for the storage of some reactor experiment components. These are described in section 3.2.9.2.

Storage pipes outside the pool are pits in the reactor floor. These pits are fabricated of 10 in. diameter stainless steel pipes. They are 16 ft deep, and located 3 ft from the adjacent pipe. Nineteen elements may be stored in each pipe, and water added to provide radiation shielding. An element spacing rack will provide an array for the fuel equivalent to the inner most 3 rings of the reactor core (including the central A ring). Locked cover plates on the pipes provide access control. The cover plates may include some shielding.

6.2.3 Ventilation System

The functions of the ventilation system are to provide temperature controlled fresh air into the reactor room, to remove the normal release of radioactive gaseous effluents during reactor operation through a HEPA (High Efficiency Air Particulate) filter, if necessary, and to isolate the reactor room in the event of an abnormal release of radioactive material.

Heated or cooled fresh air from the building heat pump unit is dumped at the rate of 650 cfm into the reactor room and the control room through five (one in the control room and four in the reactor room) wall ventilators. Remotely controlled dampers, one on the main supply duct where it enters the reactor room and one on the duct to the control room (1 and 2 in Figure 6-3), may be closed off to isolate the reactor room area. Air from the reactor room, control room and room 3 is exhausted through a roof stack at the rate of 850 ctm to maintain a negative pressure within these areas. The exhaust duct may be closed off with two remotely controlled dampers (5 and 6 in Figure 6-3). Dampers at the exhaust ducts from the counting lab and the control room (3 and 4 in Figure 6-3) may be remotely closed to isolate these regions from the reactor room. All penetrations into the reactor room are air tight. A high radiation level signal from an air particulate monitor initiates isolation of the reactor room by closing all the dampers (1 through 6 in Figure 6-3). The ventilation rate offers a minimum of 2 air changes per hour in the reactor room, control room, and the counting room. Flow may be diverted through a high efficiency filter by remotely controlled dampers (close 5 and open 6 in Figure 6-3) if necessary.

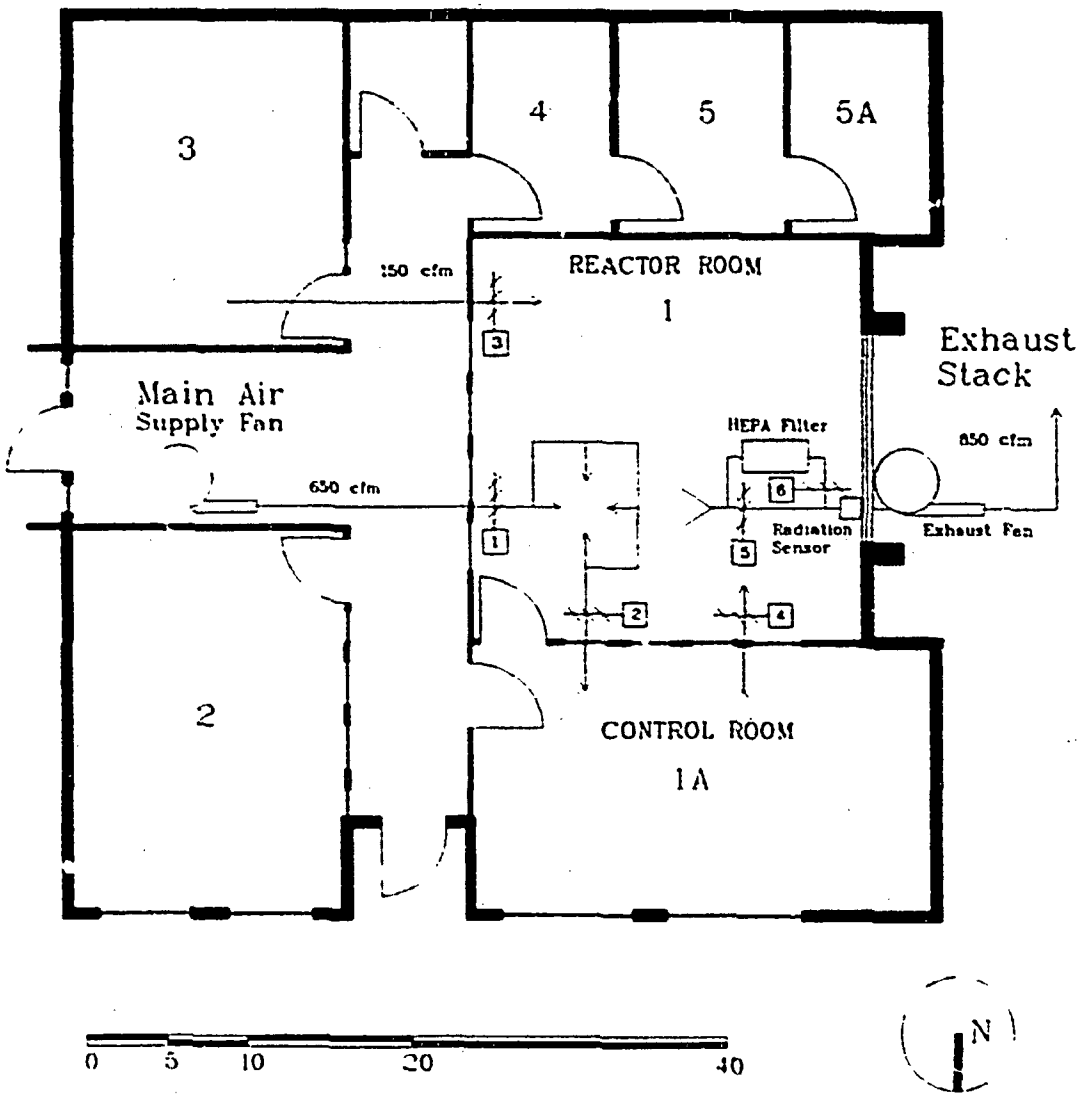

Figure 6-3 Ventilation System

6.2.4 Electric Power System

The elctrical power system for the building lighting and reactor instrumentation will be standard commercial 110/220/440 V three phase, four wire 60 Hz. Total estimated power requirement for the reactor facility is 20 kVA. The main power control panel is located in the electrical utility room with subpanels located in other areas, as required.

Power from a battery system will supply the intrusion alarm and radiation monitors (area monitor, particulate monitor, and an optional argon-41 monitor) under emergency conditions for about 15 hours. Because the reactor will scram in the case of a power interruption and decay heat generated in the core after scram will not cause fuel overheating, no emergency power is necessary to operate reactor systems.

6.2.5 Compressed Air System

A compressor located in the utility room provides 90 psig air that is piped through a pressure reducer valve, a solenoid valve, and a surge tank to the reactor control system for pulsing operations (Figure 6-4). Compressed air for the pneumatic transfer system and for the central thimble is also supplied by this compressor.

6.3 SUPPORT FACILITIES

6.3.1 Radioactive Waste Control

Gaseous radioactive effluents from the operation of the reactor, rotary specimen rack, or the pneumatic specimen tube are filtered with a HEPA (High Efficiency Particulate) filter if necessary and vented through the roof stack. More details are given in section 6.4.

Normal operations will not produce any radioactive liquid waste other than the coolant with minute amounts of tritium and waterborne activation products. The coolant maintenance system is adequate to purify it on a continuous basis. Some of the cleaning activities or irradiations may generate limited volumes of liquid wastes. Liquid wastes from the reactor shield, reactor room, and sink and shower in the counting laboratories are stored for disposal to sanitary sewer if permitted by 10 CFR 20 and approved by the university's health physics personnel.

The generation of high level radioactive waste in the form of spent fuel is not anticipated during the term of the license. The only solid waste generated consists

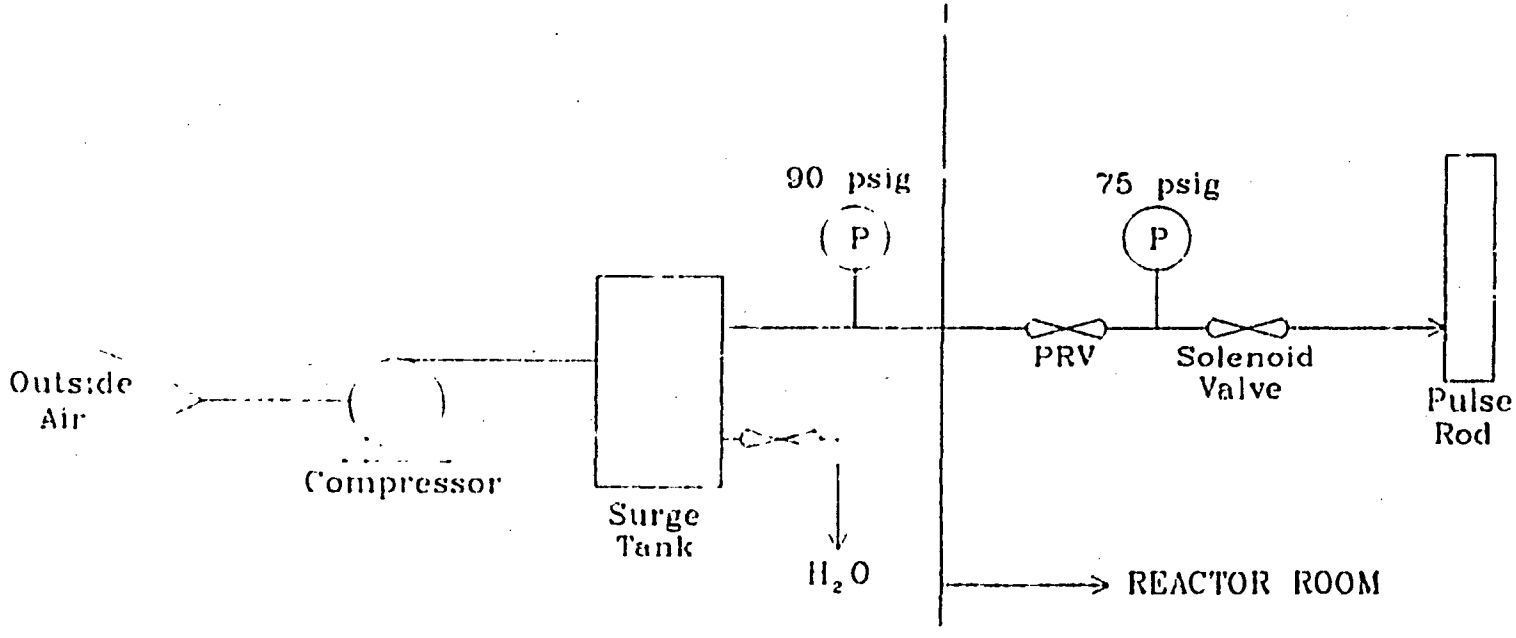

Figure 6-4 Compressed Air System

primarily of ion exchange resins, filters, potentially contaminated paper, gloves, and small activated components. Some of the reactor-based research results in the generation of solid low-level radioactive wastes. Solid wastes are stored by the university's health physics personnel and transported to an approved radioactive waste burial facility in accordance with applicable regulations.

6.3.2 Counting Laboratory

Air from the counting laboratory (Room 3) is exhausted through the reactor ventilation system. A hood for handling radioactive materials, a sink for disposal of radioactive liquids, and a safety shower for decontamination are installed in this room.

6.4 CONTAINMENT DESIGN EVALUATIONS

Containment evaluation depends on the quantity of airborne radioactivity release possible from the air and water that are in the region of the reactor during operation. Calculation, measurement and experience of similar research reactors support the evaluation. Evaluation is limited to routine effluents and should be supplemented for experiment conditions that present specific release problems. Analysis of fission product releases are treated in another chapter.

Measurement and experience at other TRIGA facilities show that radiological contributions are caused mostly by argon-41 and nitrogen-16. Argon-41 is produced by the activation (n, γ) of argon-40 present either in the air in experimental facilities or the air dissolved in water. Calculations show an activity concentration in the reactor room of 2×10^{-7} μCi/ml from the pool water and 3.6×10^{-6} μCi/ml from the experimental facilities at 250 kW. The corresponding dose rates outside the building are 0.42 μrad/hr and 7.6 μrad/hr respectively. Nitrogen-16 is produced by the activation (n, p) of oxygen-16 in the reactor core region and has a very short half life. Calculations show that the dose from the nitrogen-16 in the reactor room air is only about 0.8 μrad/hr, and dose rate from the nitrogen-16 transported to the surface of the pool is about 600 μrad/hr.

6.4.1 Argon-41 Activity in the Reactor Room

6.4.1.1 Activation of Air Dissolved in the Pool Water

The release of argon-41 dissolved in reactor water depends on the gaseous exchange rate at the air-water interface and the change in gas solubility as a function of temperature. As the pool water circulates through the core, the equilibrium concentration of argon is depleted to the lowest solubility value. The release of argon

as a function of temperature and solubility approaches zero on a time scale comparable with the time reqiured for the argon-41 activity to reach half the equilibrium value [1]. Argon atoms exchanged at the water-air interface depend on a water thickness depth that is small relative to the pool dimensions, therefore, a small fraction of the available saturated argon is exchanged with the air.

Evaluation of the water-air interface exchange rate for argon is related to an air and water thickness depth that depends on the argon atom diffusion coefficient. The total exchange rate is then a function of the pool surface area, A_s (7.3×10^4 cm^2), and an effective release volume $\dot{V}_i$. The two terms are related by

$$\beta_i A_s = f_{i \to j} \dot{V}_i \,, \qquad 6.1$$

where β_i ($cm\text{-}s^{-1}$) is a surface exchange coefficient, and $f_{i \to j}$ (s^{-1}) is the fraction of atoms exchanged from volume i to j. Estimates of β for argon vary considerably and a conservative value of 5.7×10^{-3} ($cm\text{-}s^{-1}$) [1-3] is assumed in the calculations.

During equilibrium conditions, and assuming no difference in the rates of escape fractions for argon-40 and argon-41, the number of argon atoms that escape from the water into the air equals the number of argon atoms that enter the water from air, i.e.,

$$f_{i \to j} \dot{V}_i N_i = f_{j \to i} \dot{V}_j N_j \qquad 6.2$$

where $N_j = 2.1 \times 10^{17}$ argon atoms per cm^3 of air and $N_i = 7.1 \times 10^{15}$ argon atoms per cm^3 of water at the core inlet temperature of 38 C [4].

The flow channel area per element is 0.0058 ft^2 [2] and with 70 elements the flow area is 0.406 ft^2 (377.2 cm^2). The heated length of the channel is 15 in. and the flow channel volume is 0.5075 ft^3 (14371 cm^3). At the full power operation of 250 kW the mass flow rate, w, through the reactor with natural circulation cooling is estimated (based on calculations in reference 2) to be about 2205 g/s (17500 lbm/hr) and the temperature rises from 38 C (100 F) to about 66 C (150 F) in passing through the core. The volume flow rate, v, is 2205 cm^3/s (w / density). The transit time through the core, t, is 6.52 s (flow channel volume / v). The pool cycle time, T, is equal to 2.52×10^4 s (volume of pool / v).

The changes in argon-41 concentration in the reactor water (subscript 1), in the pool water (subscript 2) and in the air of the room enclosure (subscript 3) are given by

$$V_1 \frac{dN_1^{41}}{dt} = V_1 \varphi N_1^{40} \sigma^{40} - N_1^{41} \left(v + V_1 \varphi \sigma^{41} + \lambda^{41} V_1\right) + N_2^{41} v \quad 6.3$$

$$V_2 \frac{dN_2^{41}}{dt} = -\lambda^{41} N_2^{41} V_2 - v \left(N_1^{41} - N_2^{41}\right) - \left(f_{2\to3} N_2^{41} V_2' - f_{3\to2} N_3^{41} V_3'\right) \quad 6.4$$

$$V_3 \frac{dN_3^{41}}{dt} = \left(f_{2\to3} N_2^{41} V_2' - f_{3\to2} N_3^{41} V_3'\right) - N_3^{41} \left(\lambda^{41} V_3 + q\right) \quad 6.5$$

where the superscripts 40 and 41 are for argon 40 and 41 respectively. The volume of the different regions are, $V_1 = 14371\ cm^3$, $V_2 = 55.6 \times 10^6\ cm^3$ and $V_3 = 394 \times 10^6\ cm^3$. The volume flow rate from room enclosure exhaust, q, is equal to $4.01 \times 10^5\ cm^3/s$ (850 cfm). The average thermal neutron flux , φ, is $1.2 \times 10^{13}\ n/cm^2\text{-}s$, the absorption cross sections, σ^{40} is equal to $0.47 \times 10^{-24}\ cm^2$, σ^{41} is equal to $0.060 \times 10^{-24}\ cm^2$ and the decay constant, λ^{41}, is $1.06 \times 10^{-4}\ s^{-1}$. The fraction of argon-41 atoms in region i that escape to region j per unit time, $f_{i\to j} V_i'$, is determined using equations 6.1 and 6.2. Since $v + V_1 \varphi N_1^{41} + \lambda^{41} V_1 \approx v$ equation 6.3 may be reduced to

$$V_1 \frac{dN_1^{41}}{dt} = V_1 \varphi N_1^{40} \sigma^{40} - \left(N_1^{41} - N_2^{41}\right) v \quad 6.6$$

During equilibrium conditions the left hand side of the equations 6.4, 6.5 and 6.6 are set to zero. The resulting equations are solved to obtain an expression for the argon-41 concentration in the reactor room, N_3^{41} given below.

$$N_3^{41} \left[\frac{\lambda^{41} V_3 + q + f_{3\to2} V_3'}{f_{2\to3} V_2'} - \frac{f_{3\to2} V_3'}{\lambda^{41} V_2 + f_{2\to3} V_2'} \right] = \frac{V_1 \varphi N_1^{40} \sigma^{40}}{\lambda^{41} V_2 + f_{2\to3} V_2'} \quad 6.7$$

Solving for N_3^{41} yields 86 atoms/cm^3. The corresponding activity concentration is given by

$$A = \frac{\lambda \times N_3^{41}}{C} = 2.0 \times 10^{-7}\ \mu Ci/cm^3 \quad 6.8$$

where $C = 3.7 \times 10^4$ dps/μCi.

These calculations show that argon-41 decays while in the water, and most of the radiation is safely absorbed in the water. The whole body gamma ray dose to a person immersed in a semi-infinite cloud of radioactive gases can be approximated by

$$D(\text{rad/hr}) = 900\ E\ A\ q\ \psi(x), \qquad 6.9$$

where E = the photon energy (MeV), A = activity concentration in the discharge (Ci/m^3), q = the building exhaust rate (m^3/s) and $\psi(x)$ is the dilution factor at the distance x (s/m^3). If it is assumed that the discharge is at the roof line, the dilution factor in the lee of the building (x = 0), is given by [5],

$$\psi(0) = \frac{1}{CSU} = 4.5 \times 10^{-3}, \qquad 6.10$$

where C = 0.5, S = building cross sectional area normal to wind = 170 m^2 and U = wind velocity = 2.62 m/s). The average dose rate at ground level outside the building is

$$D = 900 \times 1.3 \times 2.0 \times 10^{-7} \times 0.401 \times 4.5 \times 10^{-3}.$$

$$= 4.2 \times 10^{-7} \text{rad/hour}. \qquad 6.11$$

Actual dose values for argon-41 release will be substantially lower due to lower neutron fluxes, shorter operation times and larger dilution factors.

6.4.1.2 Activation of Air in the Experimental Facilities.

The central thimble, the rotary specimen rack, and the pneumatic transfer tube contain air. Of the radioisotopes produced, argon-41 (half-life = 110 min) is the most significant with respect to airborne radioactivity hazards. Nitrogen-16 (half-life = 7.11 s) and oxygen-19 (half-life = 26.9 s) are considerably less significant. The saturated concentration of argon-41 release from an experimental facility is calculated from

$$N_i\,(\text{atoms/ml}) = \frac{\Sigma_a\ \varphi_i}{\left(\lambda^{41} + q_i/V_i\right)} \qquad 6.12$$

where $\Sigma_a = 1.59 \times 10^{-7}$ cm^{-1}, and the volume exhaust rate, q_i, is assumed to be about 4.75×10^3 cm^3/s (about 10 cfm). The effective air volume, V_i, conservative

estimates of average thermal neutron fluxes for 250 kW operation, and the source rate from the experimental volumes, $N_i \times q_i$ (atoms/s), are given in Table 6-1.

Table 6-1 Activity of Argon-41 in the Experimental Facility

Region	Effective air volume ml	Average thermal flux at 250 kW (n/cm^2-s) × E + 12	Source atoms/s $N_i \times q_i$
Central thimble	5.3E+3	5.4	4.55E+9
Rotary specimen rack	3.3E+4	1.7	8.80E+9
Pneumatic tube	1.6E+3	1.7	4.33E+8
Total			1.38E+10

The total estimated source of argon-41 from experimental facilities, S^{41}, is about 1.38×10^{10} atoms/s (39.9 μCi/s). This is assumed to be released into the reactor room of volume, $V = 394 \times 10^6$ cm^3 and is removed by ventilation exhaust rate, $q = 4.01 \times 10^5$ cm^3/s, from the reactor room and decay (decay constant $\lambda = 1.06 \times 10^{-4} s^{-1}$). The rate of change of argon-41 concentration with time is equated to the source minus the removal rate and the resulting differential equation is solved with zero initial conditions. Assuming saturated conditions the argon-41 concentration in the reactor room and the building exhaust air is given by

$$N^{41} = \frac{S^{41}}{(\lambda V + q)} = 3.1 \times 10^4 \text{ atoms/ml} \qquad 6.13$$

The activity is calculated as outlined in the previous section and is obtained as $9. \times 10^{-5}$ μCi/ml in the reactor room and the building exhaust air. It should be emphasized that actual release rate depends on the particular configuration of experiments and air exchange rates. Experiments may replace as much as 80% of the air in these facilities. Also, the reactor is expected to be operated at full power for less than 20% of the time. These factors reduce the amount of argon-41 release by a factor of 25 to about 3.6×10^{-6} μCi/ml. Air from experimental facilities may be filtered if necessary to further reduce the argon-41 concentration levels. The

average dose rate at ground level outside the building is about 7.6×10^{-6} rad/hr. Actual dose values for argon-41 release will be substantially lower due to lower neutron fluxes, smaller air volumes, shorter operation times, and larger dilution factors.

6.4.2 Nitrogen-16 Activity in the Reactor Room.

The cross-section threshold for oxygen-16 (n, p) nitrogen-16 reactions is 9.4 MeV; however, the minimum energy of the incident neutrons must be about 10.2 MeV because of center of mass corrections. This high threshold limits the production of nitrogen-16 since only about 0.1% of all fission neutrons have energy in excess of 10 MeV. Moreover, a single hydrogen scattering event will reduce the energy of these high-energy neutrons to below the threshold. The effective cross-section of the the reaction averaged over the TRIGA spectrum is 2.1×10^{-29} cm^2. This value agrees well with the value obtained from integrating the effective cross section over the fission spectrum.

The concentration of nitrogen-16 atoms per ml of water as it leaves the reactor core is given by

$$N_2 = \frac{N_1 \sigma_1 \varphi_v}{\lambda_2} \times \left(1 - e^{\lambda_2 t}\right) = 3.38 \times 10^7 \text{ atoms/ml} \qquad 6.14$$

where N_1 = oxygen atoms per ml of water = 3.3×10^{22} atoms/ml, σ_1 = (n, p) cross section averaged over 0.6 - 15 MeV = 2.1×10^{-29} cm^2, φ_v = neutron flux (0.6 - 15 MeV) = 1×10^{13} n/cm^2-s, λ_2 = nitrogen-16 decay constant = 9.35×10^{-2} s^{-1}, and t = average time of exposure in reactor = 6.52 s.

The flow velocity in the core is 5.85 cm/s [volumetric flow rate (2205 cm^3/s) ÷ flow area (377.2 cm^2)]. Assuming that the water will rise with the same velocity, the transit time from the core to the surface is 109.4 s (= 640 cm ÷ 5.85 cm/s). This assumption is quite conservative as energy losses from the fluid stream resulting from turbulent mixing will reduce the velocity significantly. Furthermore, delays in transit time resulting from operation of the diffuser in the pool is sizeable. Measurements of the dose rates at the pool surface of several TRIGA reactors show that the diffuser reduces the nitrogen-16 contribution to the surface dose rate by an order of magnitude depending on the size of the pool.

In 109.4 seconds the nitrogen-16 decays to 3.6×10^{-5} times the value of activity leaving the core. Thus the concentration of nitrogen-16 that reaches the surface of the pool, N_0, is estimated to be 1221 atoms/ml.

Only a small portion of the nitrogen-16 atoms present near the pool surface are transferred into the air of the reactor room. When an N-16 atom is formed, it appears as a recoil atom with various degrees of ionization. For high purity water (approximately 2 μmho) practically all of the nitrogen-16 combines with oxygen and hydrogen atoms of the water. Most of it combines in anion form, which has a tendency to remain in the water [6]. It is assumed that at least one-half of all ions formed are anions. Because of its 7.1 s half-life, the nitrogen-16 decays before reaching a uniform concentration in the tank water. The activity will be dispersed over the surface area of the pool and much of it will decay during the lateral movement.

For the purpose of this analysis it is postulated that the water-bearing nitrogen-16 rises to the surface and spreads into a disk source of radius 125 cm The time it takes for the nitrogen-16 to spread into this disk is

$$t_s = \frac{125 \text{ cm}}{5.85 \text{ cm/s}} = 21.6 \text{ s} \qquad 6.15$$

The average concentration during this time is [2]

$$N = \frac{N_0}{\lambda_2 t_s} \times \left(1 - e^{\lambda_2 t_s}\right) = 524 \text{ atoms/ml.} \qquad 6.16$$

The number of nitrogen-16 atoms escaping into air is estimated [7] as 4.7 atoms / cm^2-s [524 atoms/cm^3 × 0.009 cm/s] where 0.009 cm/s is the escape velocity. The total source into the room is

$$S = 4.7 \frac{\text{atoms}}{\text{cm}^2\text{-s}} \times 4.91 \times 10^4 \text{ cm}^2 = 2.3 \times 10^5 \text{ atoms/s} \qquad 6.17$$

In the room, the activity is affected by dilution, ventilation, and decay. For saturation conditions the concentration is given by

$$N^{16} = \frac{S}{\lambda_2 V + q} = 6.2 \times 10^{-3} \text{ atoms/ml,} \qquad 6.18$$

where $V = 394 \times 10^6$ cm^3 is the reactor room volume, and $q = 4.01 \times 10^5$ cm^3/s is the ventilation exhaust rate. This corresponds to an activity concentration of 1.6×10^{-8} μCi/ml or about 0.03 Ci for continuous single shift operation at full power for one year. The gamma dose rate from nitrogen-16 of this concentration in the air is given by

$$D = \frac{3.7 \times 10^4 \ \frac{\text{photons}}{\text{s-}\mu\text{Ci}} \times 1.6 \times 10^{-8} \ \frac{\mu\text{Ci}}{\text{ml}} \times 455 \ \text{cm}}{2 \times K}$$

$$= 8 \times 10^{-7} \ \text{rad/hr.} \qquad 6.19$$

The effective radius of the room, 455 cm, is calculated based on a sphere of volume equal to the reactor room volume of 394 m^2. The flux to dose conversion factor, K, is equal to 1.6 x 10^5 photons/cm^2-s per rad/hr.

The dose rate at the pool surface arising from the nitrogen-16 near the surface is calculated using

$$D = \frac{\lambda_2 N}{2 \mu K} \times \left(1 - E_2(\mu h) \right), \qquad 6.20$$

where N = 524 atoms/ml, μ is the attenuation coefficient for 6 MeV photons in water = 0.0275 cm^{-1} and E_2 is the second exponential integral The thickness of the nitrogen-16 bearing water, h, 0.97 cm [volumetric flow rate 2205 cm^3/s × t_s ÷ area of the disk surface]. This yields a dose rate of 6 × 10^{-4} rad/hr or 600 μrad/hr. Transport time higher than that used in the calculation is normal and this fact reduces the calculated dose substantially.

REFERENCES

1. "Argon-41, Analysis of Concentration in Reactor Room from Pool Water Releases, Supplement to final questions, The University of Texas at Austin TRIGA Reactor", January 1985.

2. "Safety Analysis Report, TRIGA Reactor Facility, Nuclear Engineering Teaching Laboratory, The University of Texas at Austin", November 1984.

3. Dorsey, N. E., "Properties of Ordinary Water-substance, Reinhold Publishing Corp., New York p 554.

4. Ibid., p 537.

5. Slade, D. H., (ed.), "Meteorology and Atomic Energy", USAEC Reactor Develop. and Tech. Div. Report TID-24190, DFSTI, Springfield, Virginia, 1968.

6. Mittl, R. L., and M. H. Theys, "N-16 Concentration in EBWR", Nucleonics P. 81 (1961).

7. Dorsey, N.E., op cit., p554.

7. SAFETY ANALYSIS

In this section, abnormal operating conditions that may affect the safety of the public, operating personnel, and the reactor are analyzed. It has been concluded that the operation of the reactor will not endanger public health and safety. The major abnormal conditions analyzed are:

a. Reactivity insertion,
b. Loss of reactor coolant,
c. Fission product release from clad rupture,
d. Mechanical rearrangement of fuel.

7.1 REACTIVITY INSERTION

7.1.1 Summary

Rapid insertion of reactivity into a TRIGA reactor is a designed feature of the fuel performance [1]. Thus, most conceivable reactivity accidents do not subject the fuel to conditions more severe than the normal operating situations. Postulated accident scenarios are also analyzed and shown not to exceed fuel element safety conditions.

The standard TRIGA fuel element of U-ZrH (H/Zr = 1.6) is composed of a stable gamma phase ZrH that does not undergo a phase transition at temperatures less than about 1250 C [2]. Pulsing limits for fuel elements clad in stainless steel are set by the hydrogen equilibrium pressure within the fuel element. This pressure is a function of temperature and must not exceed the rupture stress of the fuel element cladding. For the stainless steel cladding (0.02 in. thick), the rupture pressure has been measured to be 18000 psi at 100 C. At a fuel temperature of about 1150 C the equilibrium hydrogen pressure will be about 1800 psi. For steady state operation of 250 kW the average and peak temperatures are about 180 C and 265 C respectively [5]. During pulsing operation (reactivity insertion of 1.4 %k) the peak temperature is about 349 C with an average fuel temperature of 148 C. Full insertion of the

maximum excess reactivity (2.25 %k) results in a peak temperature of 662 C and an average fuel temperature of 294 C.

The maximum reactivity that may be inserted by the pulsing operation is limited to 1.4 %k by administrative controls. Total worth of any experiment is limited to 1.4 %k. This prevents an accident due to experiment movement. Movement of the safety transient rod above 1 kW is prevented by circuit design.

7.1.2 Analysis

The maximum excess reactivity of the TRIGA reactor at Arkansas Tech University is 2.25 %k and, thus, it is theoretically possible to insert this amount of reactivity into the core. It was assumed that the reactor is just critical at some low power level (less than 1 kW) with a fuel and coolant temperature of 25 C. A lumped parameter model based on the Fuchs-Nordheim model yields the coupled set of differential equations:

$$\ell \frac{\partial P}{\partial t} = (\rho - \beta - \alpha T)\, P \qquad 7.1$$

$$C_H \frac{\partial T}{\partial t} = P - P_0 \qquad 7.2$$

where the prompt neutron life time ℓ is equal to 41 μs, P is the power level (W), P_0 is the initial power (W), $\rho - \beta$ is the reactivity above prompt critical, ρ = (k-1)/k = 0.0225, the delayed neutron fraction β = 0.007, the prompt negative temperature coefficient $\alpha = -1.1 \times 10^{-2}$ %k/C , T (C) is the average fuel temperature above the equilibrium temperature at P_0, and C_H is the heat capacity of the fuel in the core,

$$C_H\,(\text{W-s/C}) = C_0 + C_1 T. \qquad 7.3$$

Heat capacity at the equilibrium temperature corresponding to the initial power, C_0, is equal to (817 + 1.6 × 25) × N (W-s/C) and rate of change of heat capacity with temperature, C_2, is equal to 1.6 × N (W-s/C^2) [5] where N is the number of fuel elements equal to 70. This model neglects heat transfer and delayed neutron effects and average space and neutron energy variations so that all coefficients are assumed to be constant. Equation 7.1 is divided by equation 7.2 and the resulting expression for the variation in P with T is integrated , using the condition that T = 0 when P = P_0. This yields

$$\ell\left[(P-P_0) - P_0 \ln\left(\frac{P}{P_0}\right)\right]$$

$$= T\left[(\rho-\beta)C_0 - \left\{\alpha C_0 - C_1(\rho-\beta)\right\}\frac{T}{2} - \alpha C_1\frac{T^2}{3}\right]. \qquad 7.4$$

Maximum (or minimum) temperatures occur after the culmination of the pulse such that $P = P_0$ and then

$$\left[(\rho-\beta)C_0 - \left\{\alpha C_0 - C_1(\rho-\beta)\right\}\frac{T}{2} - \alpha C_1\frac{T^2}{3}\right] = 0. \qquad 7.5$$

The positive root of this equation for $\rho = 0.0225$, T_a, gives the average temperature resulting from the pulse and is equal to 264 C. The average fuel temperature at the conclusion of the pulse is 264 + 25 = 294 C.

To determine the maximum temperature in the hottest fuel element, first,the average energy, E, necessary to raise the average core temperature from the initial power level to the average temperature at the conclusion of the pulse is determined:

$$E = \int_0^{T_a} C\,dT = C_0 T_a + C_1\frac{T_a^2}{2} = 1.98 \times 10^7 \text{ W-s} \qquad 7.6$$

This average energy is then multiplied by 3.1 (the peak to average power ratio 2.2 × element peaking factor 1.4) to obtain the energy release of the element producing the peak power and is obtained as 61 MW-s. The peak temperature, T_p, is calculated by substituting this energy into equation 7.6 and solving for the temperature:

$$T_p = -\frac{C_0}{C_1} + \left[\left(\frac{C_0}{C_1}\right)^2 + 2 \times 3.1 \times \frac{E}{C_1}\right] = 637\text{ C}. \qquad 7.7$$

The peak temperature of the fuel at the conclusion of the pulse is given by T_p + 25 = 662 C. This temperature is less than the phase transition temperature of 1250 C for a H-Zr ratio of 1.6 and so the fuel is stable.

During the time of peak fuel temperature, the clad is subjected to stress due to the pressure produced by the hydrogen released from the fuel, P_h, the fission product gases, P_{fp}, and the expansion of air, p_{air}. For H-Zr ratios greater than 1.58 the equilibrium hydrogen pressure can be approximated by

$$P_h \text{ (atmospheres)} = \exp\left[1.767 + 10.3014\,x - \frac{19740.37}{T_K}\right], \qquad 7.8$$

where x = H-Zr atoms ratio and T_K (K) = fuel temperature. This expression was derived from least square fits to the data of Simnad and Dee [3]. It should also be pointed out that this is a conservative estimation because the equilibrium pressure of hydrogen over the fuel is not achieved during a pulse or step insertion of reactivity.

The pressure exerted by the fission product gases is given by

$$P_{fp} = f\left(\frac{n}{E}\right)\frac{E}{V}RT_K$$

$$= 1.5 \times 10^{-5}(0.00119)\frac{13.5}{3.31 \times 10^{-3}}\,RT_K$$

$$= 7.3 \times 10^{-5}\,RT_K \qquad 7.9$$

where R is the gas constant equal to 8.206×10^{-2} liters-atmospheres / mole-K, E = total energy produced in the element (MW-day) and f is the average fission product release fraction. This fraction is the sum of the differential release fractions, f_n, weighted with the differential volume fractions. From reference [4]

$$f_n = 1.5 \times 10^{-5} + 3.6 \times 10^{3}\, e^{-\frac{1.34 \times 10^{4}}{T_n}} \qquad 7.9a$$

where T_n (K) is the fuel temperature at the differential volume of the element during normal operation. Since the maximum fuel temperature exists only in a small fraction of the fuel volume and the maximum fuel temperature during normal operation is less than 400 C the release fraction, f, may be assumed to be around 1.5×10^{-5}. The free volume occupied by the gases

$$V = h \times \pi \times r^2 = 3.3 \text{ ml} \qquad 7.9b$$

where the inner radius of the clad, r, is 1.816 cm, the height of the free volume between the fuel and the reflector end piece is assumed to be 1/8 in. or 0.3175 cm. This is a conservative assumption since the porosity of the graphite reflector of 20% is neglected. The fission product gas production rate, n/E (moles/MW-day), is not independent of power density (neutron flux) but varies slightly with the power density. The value n/E = 0.00119 moles/MW-day is accurate to within a few percent over the range from a few kW/element to over 40 kW/element. For standard

TRIGA fuel the maximum burnup is about 4.5 MW-days/element. It is assumed that the element has three times this burnup.

Air trapped within the fuel element clad would exert a pressure

$$P_{air} = \frac{RT_K}{22.4} \qquad 7.10$$

where it is assumed that the initial specific volume of the air (22.4 liters/mole) is present all the time. Actually, air forms oxides and nitrides with zirconium so that after relatively short operation the air is no longer present in the free volume inside the fuel clad element.

The total internal pressure, P, for H-Zr ratio of 1.65 and fuel burned up to 13.5 MW-days with a maximum operating temperature not to exceed 400 C is given by

$$P = P_h + P_{fp} + P_{air}$$

$$= 2.073 \times 10^9 e^{-\frac{19740.37}{T_K}} + 5.39 \times 10^{-2} \times T_K \text{ (psi)}. \qquad 7.11$$

The stress imposed on the clad by the gases within the free volume inside the clad is given by

$$S = \left(\frac{r_c}{t_c}\right) P = 36.75\, P$$

$$= 7.61 \times 10^{10}\, e^{-\frac{19740.37}{T_K}} + 1.97\, T_K \text{ (psi)}. \qquad 7.12$$

where r_c is the clad outer radius equal to 1.8669 cm and t_c is the clad thickness equal to 0.508 cm. This imposed stress is plotted as function of maximum fuel temperature in Figure 7-1. Also plotted are the yield and ultimate strength of type 304 stainless steel clad. The clad ultimate strength is not exceeded if the maximum fuel temperature is maintained below 950 C and yield strength will not be exceeded for fuel temperatures below 920 C, which is slightly below the yield point and well below the rupture point.

For a reactivity insertion of 2.25 %k the average fuel temperature is about 294 C and the clad temperature is well below the saturation temperature of water which is 113 C at 23.4 psia. At a temperature of 662 C (assume the clad to be at the peak fuel temperature) the ultimate tensile strength of type 304 stainless steel is

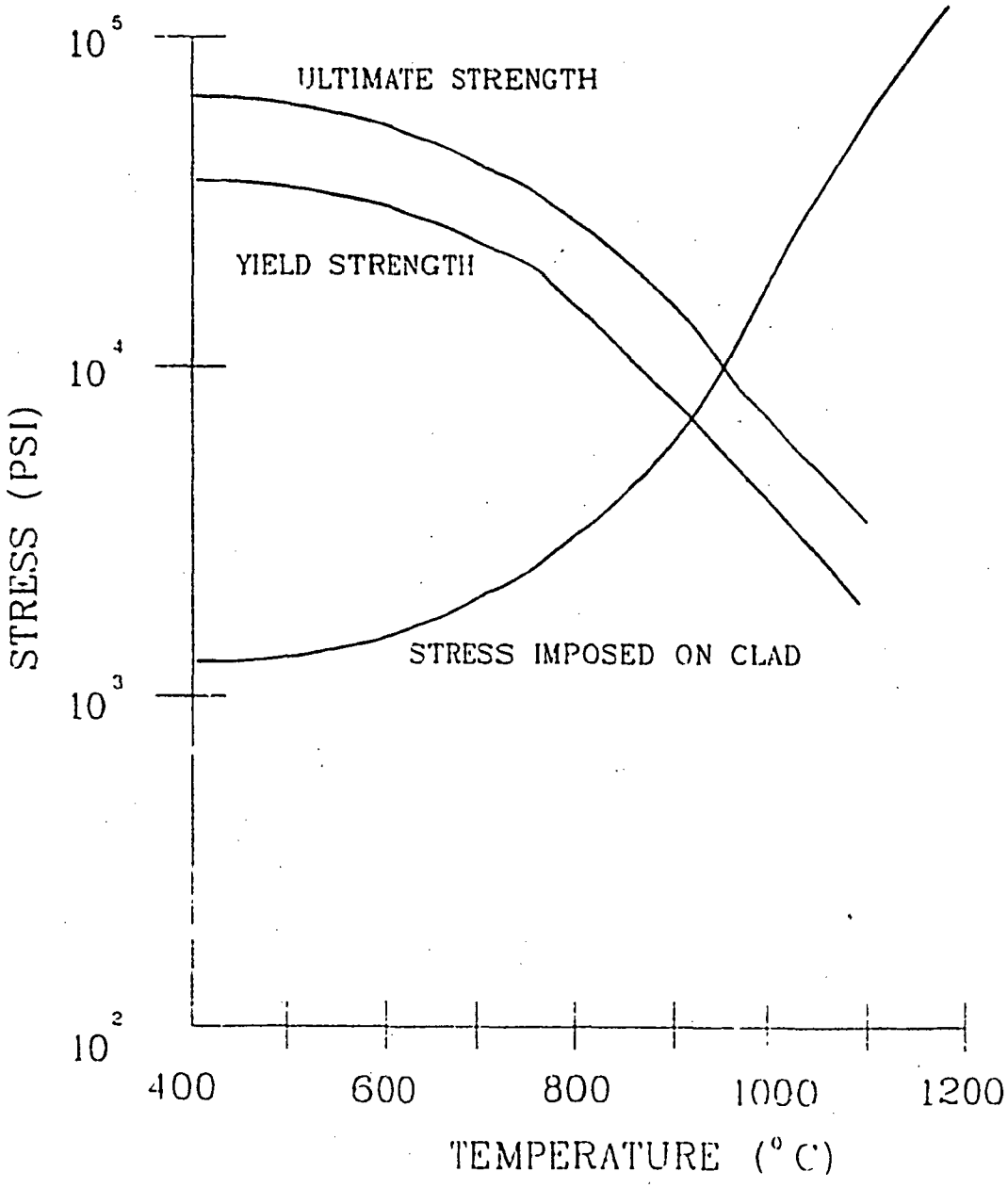

Figure 7-1 Strength of Type 304 Stainless Steel Clad and Stress Imposed on Clad as a Function of Temperature

above 41500 psi and the yield strength is 28500 psi. Comparing this with stress of 1894 psi applied to the clad during the reactivity insertion it is seen that the strength of the material far exceeds the stress produced. Therefore, there would be no loss of clad integrity or damage to the fuel as a result of maximum reactivity insertion.

During a normal pulsing operation (insertion of 1.4 %k) similar calculations show that the maximum fuel temperature is 349 C and the corresponding stress on the clad is 1226 psi. The total energy produced during the pulsing operation is about 8.2 MW-s with a peak power estimated to be about 300 MW.

7.2 LOSS OF REACTOR COOLANT

The reactor operates at a maximum power level of 250 kW with 70 fuel elements. The average power density is 3.57 kW (thermal) per element. Figure 7-2 [5] shows the maximum temperature reached by the fuel as a function of operating power density for several delay times between reactor shutdown and loss of coolant from the core. This figure is generated [5] using a two-dimensional transient-heat transport code and assumes that the fission product decay heat is removed by natural convective flow of air through the core. It is assumed that the coolant is lost after the reactor operates continuously at a constant power density so that the maximum inventory of fission products is available to produce heat after the reactor is shut down. When the coolant is lost from the core the fuel and surroundings are assumed to be at 27 C. Even if the fuel is at operating temperature, it takes the standard non-gapped fuel element only one or two minutes to cool down. The final temperature in such a situation is not appreciably different (2%- 4% higher) from the values shown in Figure 7-2.

7.2.1 Fuel Temperature and Clad Integrity

For a fuel operating at a maximum power density of 7.2 kW (thermal) per element, [3.57 × 2 (peaking factor)] if the coolant is lost immediately at shutdown (zero cooling time) the maximum fuel temperature reached by the fuel is 329 C. At this temperature the stress imposed on the clad is 1186 psi (from equation 7.12). From Figure 7-1 the yield strength for the clad is above 35000 psi. Therefore, it can be concluded that the postulated loss-of-coolant accident will not result in any damage to the fuel, will not result in release of fission products to the environment, and will not require emergency cooling.

It can also be seen from Figures 7-1 and 7-2 that the fuel temperature can be increased to 900 C without substantial yielding of the clad, and this requires opera-

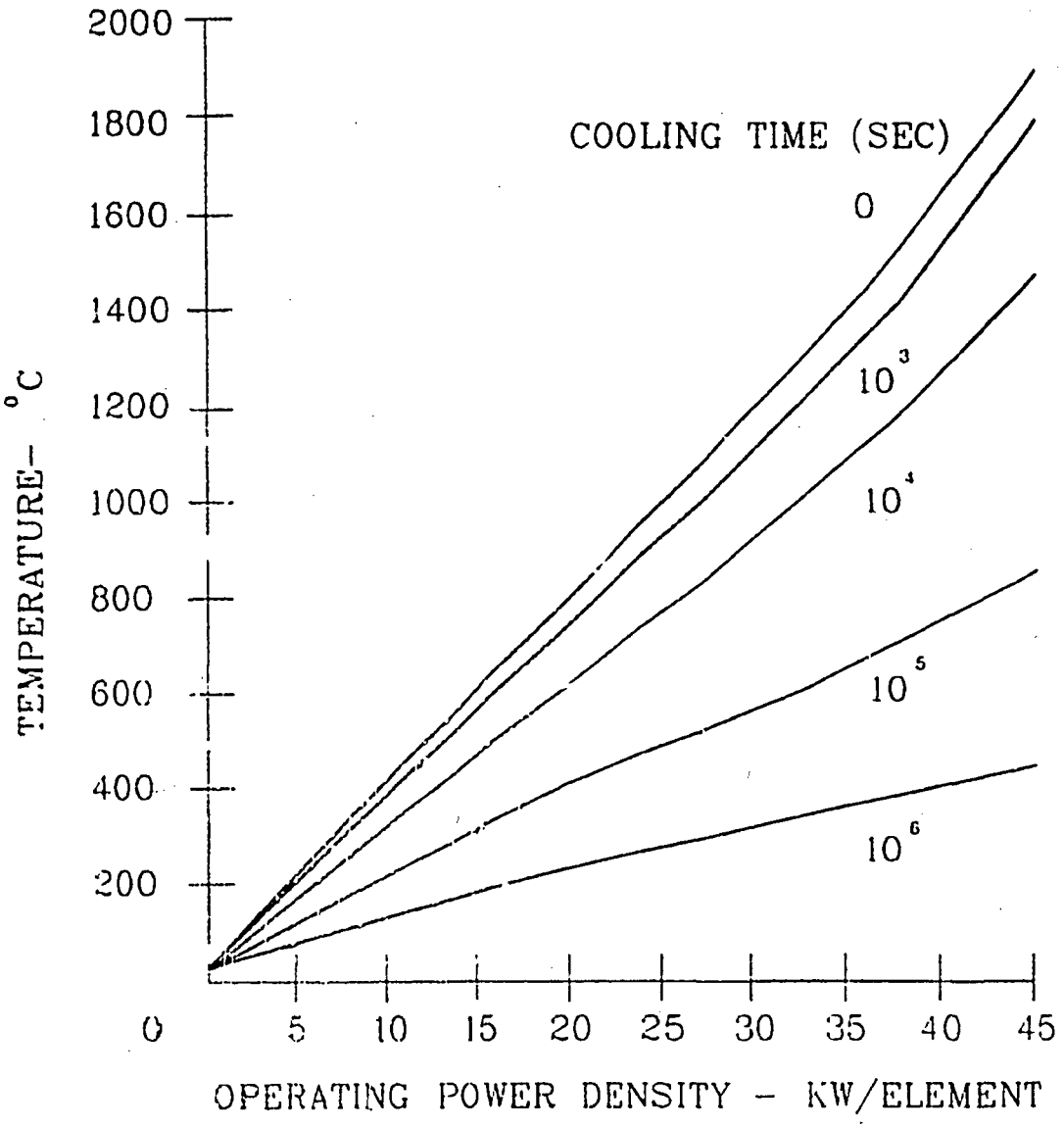

Figure 7-2 Maximum Fuel Temperature Versus Power Density After Loss of Coolant for Various Cooling Times Between Reactor Shutdown and Coolant Loss

tion at about 22 kW per element. Above 22 kW per element forced cooling is necessary.

7.2.2 Radiation Levels.

Even though the possibility of loss of shielding water is believed to be exceedingly remote, a calculation has been performed to evaluate the radiological hazard associated with this type of accident. Radiation dose rates are calculated for two locations. The first location is 6.4 m above the unshielded reactor core, near the top of the reactor tank and receives direct radiation. The second location is at the floor level and it is assumed that this location receives scattered radiation from a thick concrete ceiling 7 m above the top of the reactor tank. The assumption that there is a thick concrete ceiling maximizes the reflected radiation dose. Normal roof structures would give considerably less backscattering. Two cases are analyzed. In the first case it is assumed that the reactor has been operating for 10 hours, and in the second case it is assumed that the reactor has been operating for 1000 hours, prior to losing all the shielding water.

The core shut down and drained of water, was treated as a bare cylindrical source of 1 MeV photons of uniform strength. Its dimensions were taken to be equal to those of the active core lattice. The source strength as a function of time was determined from Way and Wigner's [6] (equation 45) data on fission product decay. No accounting was made of sources other than fission product decay gammas (i.e., activation gammas from the steel cladding and aluminum grid plates) or attenuation through the fuel element end pieces and the upper grid plate. The first of these assumptions is optimistic, the second conservative; the net effect is conservative. The conservative assumption of a uniformly distributed source of 1 MeV photons was balanced by not assuming any build-up in the core.

The direct dose rate, D_d, at a point outside and on the axis of a cylindrical source is given by

$$D_d = \frac{S_v}{K} \int_0^{x_c} \int_0^{r_c} e^{-\mu_c z} \frac{2\pi r\, dr\, dx}{4\pi R^2}$$

$$= \frac{S_v r_c^2}{4 \mu_c a^2 K} \left(1 - e^{-\mu_c x_c}\right). \qquad 7.13$$

The second expression is obtained for distances far from the core (i. e $a > r_c$ and x_c). The flux-to-dose conversion factor K is equal to 5.77×10^5 photons/cm^2-s

per rad/hr, μ_c is the core attenuation coefficient equal to 0.207 cm^{-1}, R is the distance from volume element to receiver (cm), z is the slant penetration in core equal to xR/(a+x) (cm), a is the distance from the top of the core to the receiver equal to 640 cm, r_c is the core radius equal to 26 cm, and x_c is the core height equal to 38 cm. The volumetric source of 1 MeV photons is

$$S_v\left(\frac{MeV}{cm^3-s}\right) = \frac{S(t,T)}{\pi r_c^2 x_c}, \qquad 7.14$$

where S(t,T) is the total core source term (MeV/s) given by

$$S(t,T) = 3.1 \times 10^{10}\left(\frac{fissions}{W}\right) \times P\,(W) \times \int_t^{t+T} \Gamma(\tau)\,d\tau$$

$$= 1.95 \times 10^{11} \times P \times \left[t^{-0.2} - (t+T)^{-0.2}\right], \qquad 7.15$$

where P is the reactor power (W), T is the period of time at power (s), and t is the time after fission (s). The fission product energy release, $\Gamma(t)$, (MeV/s-fission) is given by

$$\Gamma(t) = 1.26\,t^{-1.2}. \qquad 7.16$$

The scattered dose rate, D_s, is given by

$$D_s = 6.03 \times 10^{23}\rho\,\frac{Z}{A}\,\frac{I_0\,C}{K(E)\,x_d^{\,2}}\,Q_a \qquad 7.17$$

where ρ is the density of the scattering material (concrete) equal to 2.3 g/cm^3, and Z/A is the ratio of average atomic number to atomic mass of the scatterer equal to 0.5. K(E) is the photon current to dose rate conversion at the energy E of the scattered photon equal to 2.75×10^6 photons/cm^2-s per rad/hr, and x_d is the distance from the scattering point to the detector equal to 700 cm.

$$Q_a = \frac{1}{\mu_0 + \mu_1\left(\frac{\cos\theta_0}{\cos\theta_1}\right)}\,\frac{\delta\sigma}{\delta\Omega} \qquad 7.18$$

where μ_0 and μ_1 are the attenuation coefficient in the scatterer for incident and scattered photons (cm^{-1}) and are equal to 0.146 and 0.292 respectively. The incident (θ_0) and scattered (θ_1) angles measured from the normal to the scatterer are taken

as 0 degrees and 25 degrees respectively. Differential Klein-Nishina scattering cross section, $\frac{\delta\sigma}{\delta\Omega}$ is given by

$$\frac{\delta\sigma}{\delta\Omega}\left(\frac{cm^2}{electron-steradian}\right) =$$

$$\frac{r_e^2}{2}\left[\frac{E}{E_0} - \left(\frac{E}{E_0}\sin\theta\right)^2 + \left(\frac{E}{E_0}\right)^3\right] \qquad 7.19$$

where r_e is the classical electron radius equal to 2.818×10^{-13} cm, θ is the scattering angle given by $\pi - \theta_0 - \theta_1$, E_0 is the incident photon energy equal to 1 MeV. The energy of the scattered photon, E, is given by

$$E = \frac{E_0}{1 + \frac{E_0}{0.51}\left(1 - \cos\theta\right)}. \qquad 7.20$$

It is assumed that all of the source photons that exit the top of the reactor pool were incident normally to the concrete roof (i.e. $\theta_0 = 0$) at a point directly over the core, thus the incident current times the cross section of beams (photons/s), I_0C, is given by

$$I_0 C = S_0 \Omega \qquad 7.21$$

where

$$S_0 = \frac{S_v \pi r_c^2}{\mu_c} \qquad 7.22$$

and

$$\Omega = \frac{\frac{\pi}{2} - \sin^{-1}\left[\frac{Y_0^2\left(R_0^2 - X_0^2\right) + R_0^2\left(R_0^2 + X_0^2\right)}{\left(R_0^2 + X_0^2\right)\left(R_0^2 + Y_0^2\right)}\right]}{2\pi} \qquad 7.23$$

where R_0 is the distance from the core to the top of the pool ≈ 6.4 m, X_0 is the half width of the pool ≈ 1 m and Y_0 is the half length of the pool ≈ 1.5 m.

Table 7-1 shows the calculated radiation dose rates for loss of shield water. The table indicates that except for the direct beam from the core, radiation exposure

Table 7-1 Radiation Dose Rates for Loss of Shield Water

	Radiation (rad/hr)			
	Direct		Scattered	
Operation Time→ / Decay time ↓	10 hr	1000 hr	10 hr	1000 hr
1 minute	6.6E+2	8.2E+2	2.1E-1	2.5E-1
1 hour	1.5E+2	3.0E+2	4.8E-2	9.4E-2
1 day	1.6E+1	1.1E+2	4.5E-3	3.5E-2
1 week	1.7E+0	4.7E+1	5.2E-4	1.4E-2
1 month	3.0E-1	1.7E+1	3.0E-5	5.4E-3

in the reactor room would be high but tolerable even immediately after loss of coolant and that emergency operations could be carried out with limited time of action. Since the direct radiation would be collimated upward, radiation levels outside the building are caused by only scattered radiation. This is not expected to be too high to be a public hazard.

FISSION PRODUCT RELEASE FROM CLAD RUPTURE

In this analysis it is assumed that a fuel element in the region of highest power density fails in air after a long exposure at full power. The inventory of radioactive noble gases and halogens in the reactor core can be calculated [8] using

$$Q_i\,(Ci) = 0.21081 \times 10^6 \times P \times F_i \times \left(1 - e^{\lambda_i t}\right) \qquad 7.24$$

where the constant 0.21081×10^6 has units of fissions/MW per disintegrations/Ci, P is the Power in MW, F_i is the cumulative yield of fission products [9], λ_i is the decay constant and t is the operating time. The core inventory after continuous operation at 0.25 MW for 5 years (1.25 MW-yr) is given in Table 7-2. This inventory is conservative since actual burnup after 5 years is expected to be less than 22% of 1.25 MW-yrs.

The release of fission products from U-ZrH fuel has been studied at some length. A summary report of these studies [4] indicates that the release is mainly through recoil into the fuel-clad gap at temperatures below 400 C and this process is independent of the operating temperature. Above this temperature the release is through a diffusion process and is temperature dependent. It is important to note that the release fraction in accident conditions is characteristic of the normal operat-

Table 7-2 Noble Gases and Halogens in the Reactor

Isotope	$T_{1/2}$		F_i %	Q_i Ci/core
Kr-83m	1.86	H	0.53	1119.4
Kr-85m	4.36	H	1.31	2761.6
Kr-85	10.70	Y	0.29	289.5
Kr-87	76.00	M	2.54	5354.6
Kr-88	2.79	H	3.58	7547.0
Kr-89	3.18	H	4.68	9865.9
Xe-131m	12.00	D	0.04	84.3
Xe-133m	2.30	D	0.19	400.9
Xe-133	5.27	D	6.77	14271.9
Xe-135m	15.70	M	1.06	2234.6
Xe-135	9.13	H	6.63	13976.8
Xe-137	3.82	M	6.13	12922.7
Xe-138	14.20	M	6.28	13238.9
I-131	8.05	D	2.84	5987.0
I-132	2.26	H	4.21	8875.1
I-133	20.80	H	6.77	14271.9
I-134	52.30	M	7.61	16042.7
I-135	6.75	H	6.44	13576.2

ing temperature and not the temperature during the accident conditions. This is because the fission products released are those that have collected in the fuel-clad gap during normal operation.

The following assumptions are used in the analysis.

a. One Fuel element in the region of highest power density fails in air after 1.25 MW-yr exposure and 100% of the noble gases and halogens in the gap are released. The release from a single element of a 70 element core in the region of highest power density with a peak to average flux of 2 is assumed. This fuel element produces 2.85% of the total power.

b. Peak fuel temperature is less than 400 C and the release fraction is estimated to be less than 1.5×10^{-5} (GA 4314). If a conservative value of 2.0×10^{-5} is assumed the fraction of noble gases or halogens released from the fuel element is obtained as 5.7×10^{-7} ($0.0285 \times 2. \times 10^{-5}$).

c. There is no plate-out of any released fission products.

7.3.1 Exposure to Reactor Room Occupants.

In order to calculate the exposure to reactor room occupants the following assumptions are made.

1. Noble gases and the halogens are released into the reactor room rapidly at the fraction given above (b). The concentration, q_i (μCi/ml), of the radioisotope in the room which has a volume of 394 m^3 is given by equation 7.25 and the calculated values are shown in Table 7-3.

$$q_i \left(\frac{\mu Ci}{ml}\right) = \frac{Q_i \times 10^6 (\mu Ci) \times 5.7 \times 10^{-7}}{394 \times 10^6 \, cm^3}. \qquad 7.25$$

Table 7-3 Exposure to Occupant (step 4 of 7.3.1)

Isotope	q_i (μCi/ml)	mr/yr per Ci/ml	Exposure mr/10 min Whole body
Kr-83m	1.63E–06	4.05E+05	1.25E–05
Kr-85m	4.01E–06	9.01E+08	6.87E–02
Kr-85	4.20E–07	1.23E+07	9.84E–05
Kr-87	7.77E–06	4.66E+09	6.89E–01
Kr-88	1.10E–05	1.18E+10	2.46E+0
Kr-89	1.43E–05	1.10E+10	3.00E+0
Xe-131m	1.22E–07	4.92E+07	1.15E–04
Xe-133m	5.81E–07	1.69E+08	1.87E–03
Xe-133	2.07E–05	1.90E+08	7.49E–02
Xe-135m	3.24E–06	2.36E+09	1.46E–01
Xe-135	2.03E–05	1.41E+09	5.44E–01
Xe-137	1.88E–05	1.02E+09	3.64E–01
Xe-138	1.92E–05	6.60E+09	2.41E+0
I-131	8.69E–06	2.12E+09	3.51E–01
I-132	1.29E–05	1.25E+10	3.06E+0
I-133	2.07E–05	2.36E+09	1.32E+0
I-134	2.33E–05	1.45E+10	6.43E+0
I-135	1.97E–05	9.13E+09	3.42E+0
Total Whole Body			2.43E+01

2. Ventilation in the room is assumed to be zero.
3. The occupant remains in the room for 10 minutes while evacuation takes place.
4. The annual radiation exposure resulting from immersion in a hemisphere of contaminated air (mr/yr per μCi/ml) for each isotope is given in Table 7-3 [10,11]. The whole body exposure is obtained by multiplying the concentration in the reactor room, q_i, by this constant corrected for 10 minute time. The results are given in Table 7-3.
5. The whole body dose from each isotope, D_h, was also calculated using data from the Radiological Health Handbook [12]. The exposure is given by

$$D_h \left(\frac{R}{hr}\right) = q_i \times 3.7 \times 10^4 \times \left(E_\gamma\right) \times \left(\frac{1 - e^{-\mu r}}{k\mu}\right) \qquad 7.26$$

where E_γ (Mev/dis) for each isotope is obtained from [13], and k is the energy fluence rate to give 1 R/hr for each isotope, μ is the linear absorption coefficient for each isotope and r is the radius of a sphere with volume equal to reactor room volume = 455 cm. The results for 10 minute exposure is given in Table 7-4.

The total whole body 10 minute exposure obtained from steps 4 and 5 are 24.3 mr and 0.978 mr respectively. Though not in agreement both values are low enough to demonstrate that the personnel exposure is reasonable. Since the actual burnup is expected to be less than 22 % of 1.25 MW-yr the actual exposure is not expected to be larger than 5.35 mr. The higher value of 24.3 mr for 10 minutes immediately following a fuel element rupture in air is well within the requirements of 10 CFR Part 20.

6. The Isotope Ingestion, I_i (Ci) is calculated assuming a respiration rate of 3.47×10^{-4} m^3/s [14] and is given by

$$I_i = q_i \times 3.47 \times 10^2 \frac{ml}{s} \times 10\,min \times 60\frac{s}{min}\,. \qquad 7.27$$

Table 7-5 shows the average gamma ray energy and internal dose effectivity for each fission product isotope. The iodine isotopes ingested would concentrate in the thyroid and the thyroid dose, D_{th}, is calculated by multiplying the iodine ingested by the corresponding internal dose effectivity factor. These are also shown in Table 7-5. The resultant thyroid exposure is reasonable based on the conservative assumptions made. The actual value will be less than 22% of this value based on actual burnup.

Table 7-4 Exposure to Occupant (step 5 of 7.3.1)

Isotope	q_i μCi/ml	E_γ Mev/dis	k Mev/cm^2/s	μ cm^{-1}	Exposure mr/10 m^3 whole body
Kr-83m	1.63E-06	2.60E-03	3.80E+01	3.00E-01	2.29E-03
Kr-85m	4.01E-06	1.60E-01	6.00E+05	1.70E-04	2.89E-03
Kr-85	4.20E-07	2.20E-03	2.30E+01	5.00E-01	4.96E-04
Kr-87	7.77E-06	7.80E-01	5.30E+05	2.00E-05	3.20E-02
Kr-88	1.10E-05	2.00E+0	6.30E+05	5.80E-05	9.63E-02
Kr-89	1.43E-05	1.60E+0	6.00E+05	6.50E-05	1.06E-01
Xe-131m	1.22E-07	2.00E-02	3.00E+04	1.00E-03	1.84E-04
Xe-133m	5.81E-07	4.10E-02	2.40E+05	3.20E-04	2.59E-04
Xe-133	2.07E-05	4.60E-02	3.30E+05	2.80E-04	7.61E-03
Xe-135m	3.24E-06	4.30E-01	5.10E+05	1.20E-04	7.47E-03
Xe-135	2.03E-05	2.50E-01	5.60E+05	1.50E-04	2.46E-02
Xe-137	1.88E-05	1.60E-01	6.00E+05	1.70E-04	1.35E-02
Xe-138	1.92E-05	1.10E+0	5.60E+05	7.80E-05	1.04E-01
I-131	8.69E-06	3.80E-01	5.20E+05	1.26E-04	1.73E-02
I-132	1.29E-05	2.20E+0	6.50E+05	5.60E-05	1.21E-01
I-133	2.07E-05	6.10E-01	5.20E+05	1.05E-04	6.66E-02
I-134	2.33E-05	2.60E+0	7.00E+05	5.00E-05	2.40E-01
I-135	1.97E-05	1.50E+0	6.00E+05	6.70E-05	1.36E-01
Total Whole body					9.78E-01

Table 7-5 Thyroid Dose

Isotope	q_i μCi/ml	I_i 10 min μCi	Effectivity Factor rem/Ci	Thyroid Dose rems
I-131	8.69E-06	1.81E+00	1486030	2.69E+0
I-132	1.29E-05	2.68E+00	52880	1.42E-01
I-133	2.07E-05	4.31E+00	395100	1.70E+0
I-134	2.33E-05	4.85E+00	25380	1.23E-01
I-135	1.97E-05	4.10E+00	1231000	5.05E+0
Total Thyroid Dose				9.71E+0

7.3.2 Exposure to General Public

Some of the radioisotopes from a fuel element rupture would be released to the environment and the purpose of this analysis is to calculate the exposure to the general public. The following assumptions are made for the analysis.

1. Stack radiation monitors would detect a higher radiation level and divert the ventilation air flow through an absolute filter. Air intakes to the room would be isolated and a negative pressure is maintained in the reactor room to prevent radioactivity release except through the exhaust vent. Air flow through the exhaust under these conditions is 150 cfm (0.071 m^3/s).
2. The concentration of the radioisotopes would be reduced over time from their removal by the ventilation and also by the decay of the isotopes. The concentration also decreases due to dilution over distance. For the purpose of this analysis these factors are not taken into account.
3. The contribution to the dose rates of the decay products of the isotopes released are small and not taken into account.
4. The concentration, q_i (Ci/ml) multiplied by the stack flow rate (0.071 m^3/s) is assumed to be released through the stack (release rate).
5. The release occurs at roof level, about 10.0 m above grade and a dilution due to wind will be encountered. The dilution factor, $\psi(0)$, given by

$$\psi(0) = \frac{1}{CSU} = 4.5 \times 10^{-3} \frac{s}{m^3} \qquad 7.28$$

   where C is a shape factor taken as 0.5 (experimentally determined to be between 0.5 and 0.67), S is the cross section of the building and is taken as 170 m^2 since the prevailing winds near the building are from east and east-northeast, and U the average wind speed is about 2.62 m/s. The release rate from step 4 is diluted at the rate of $\psi(0)$ and the concentration in the environment is obtained by multiplying the release rate by the dilution factor.
6. The exposure to the general public may be calculated as outlined in steps 4 and 5 of section 7.3.1, with the concentration released to the environment obtained above. Over a period of 1 hr the total whole body exposure may also obtained by scaling the results of the occupational exposure by 60/10 (time correction) and 3.2×10^{-4} (dilution correction, $0.071 \times 4.5 \times 10^{-3}$). The resulting exposure is between 1.9×10^{-3} mr and 4.7×10^{-2} mr in one hour.
7. A one hour thyroid dose is calculated as outlined in step 6 of section 7.3.1 or using the above scaling of the occupational thyroid dose and is about 1.9×10^{-2} rems.

These calculations indicate that the exposure to the general public as a result of the fuel element failure in air after extended reactor operations would not be significant.

7.4 MECHANICAL REARRANGEMENT OF FUEL

During fueling or defueling operations a 400 lb lead transfer cask (such as is used with the BMI-1 shipping cask) is lowered into the reactor pool by means of a chain falls and A-frame superstructure. The cask is capable of holding three standard TRIGA fuel elements which are remotely loaded into the cask by a fuel handling tool. This section analyzes the consequence of impacting the reactor and the reflector if the cask is inadvertently dropped into the pool.

The impact of the cask may deflect or crush the fuel element. Rupture of several fuel elements may result in the rare gas/halogen fission products in the fuel-clad gas gap to escape. Iodine release is the largest radiation contributor. This type of an incident would occur only in a flooded pool and the presence of pool water would reduce the amount of Iodine release to the room. Dissolution of other halogens in the pool water would also reduce the amount of fission product release considered in section 7.3, even though more fuel elements may be involved here. Thus, it is estimated that the radiation exposure for this postulated scenario would not exceed the one analyzed in section 7.3.

The reflector will serve as an impact shield for the reactor core and will reduce the consequences described in the previous paragraph. Since the reflector or the detectors contain only low amounts of radioactive material, the impact of the cask on the reflector or the detectors will not result in a significant radioactivity release. In conclusion the worst case resulting from dropping the cask into the reactor pool would not exceed the fuel element failure in air analyzed previously.

REFERENCES

1. West, G. B., W. L. Whittemore, J. R. Shoptaugh Jr., J. B. Dee, C. O. Coffer, "Kinetic Behavior of TRIGA Reactors", General Atomic Report GA-7882, 1967.

2. Simnad, M. T., "The U-ZrH_x Alloy: Its Properties and Use in TRIGA Fuels", General Atomic Report E-117-833, 1980.

3. Simnad, M. T. and J. B. Dee, "Equilibrium Dissociation Pressures and Performance of Pulsed U-ZrH Fuels at Elevated temperatures", Gulf General Atomic Report GA-8129, 1967.

4. Foushee, F. C., and R. L. Peters, "Summary of TRIGA Fuel Fission Product Release Experiments", Gulf Energy and Environmental Systems Report Gulf-EES A10801, 1971 p. 3.

5. "Safety Analysis Report, TRIGA Reactor Facility, Nuclear Engineering Teaching Laboratory, The University of Texas at Austin", November 1984.

6. Way, K. and E. P. Wigner, "Radiation from Fission Products", Physics Review, 70 p. 115, 1946.

7. Lamarsh J. R., "Introduction to Nuclear Engineering", Addison Wesley, 1977.

8. Meek and Ryder, "Compilation of fission product yields", NEDO 12154, 1974.

9. Kocher, D. C., "Dose Rate Conversion for External Exposure to Photon and Electron Radiation from Radionuclides Occurring in Routine Releases from Nuclear Fuel Cycle Facilities", Health Physics, 38, pp 543-621, 1980.

10. "TRIGA Mark I Safety Analysis Report", Michigan State University, June 1984.

11. Radiological Health Handbook, U. S. Department of Health, Education, and Welfare, 1970.

12. USNRC Regulatory Guide 3.34, 1979.

13. USNRC Regulatory Guide 4.

8. FACILITY ADMINISTRATION

8.0 INTRODUCTION

The TRIGA Mark I reactor facility located at the Center for Energy Studies will be owned and operated by Arkansas Tech University. This facility will be operated as part of the engineering program in the Engineering Department, School of Systems Science. Operation will be for education, training, and the conduct of research and development activities. Licenses for the facility operation will include a facility specific license for operation issued by the U.S. Nuclear Regulatory Commission and a university wide license for radioactive materials issued by the State of Arkansas Department of Health. Additional licenses may be obtained as required for facility activities.

8.1 ORGANIZATION

8.1.1 Structure

Figure 8-1 illustrates the organizational structure that is applied to the management and operation of the reactor facility. Responsibility for the safe operation of the reactor facility is a function of the management structure of Figure 8-1. The responsibilities include safeguarding the public and staff from undue radiation exposures and adherence to license or other operational constraints.

Facility staff is typically organized as three full-time persons consisting of the Facility Director, Reactor Supervisor, and an operator or technician. Descriptions of key components of the organization follow.

8.1.2 Vice President for Academic Affairs

Research and education programs are administered through the Office of the Vice President of Academic Affairs with functions delegated to the Dean of the School of Systems Science and the Head of the Department of Engineering.

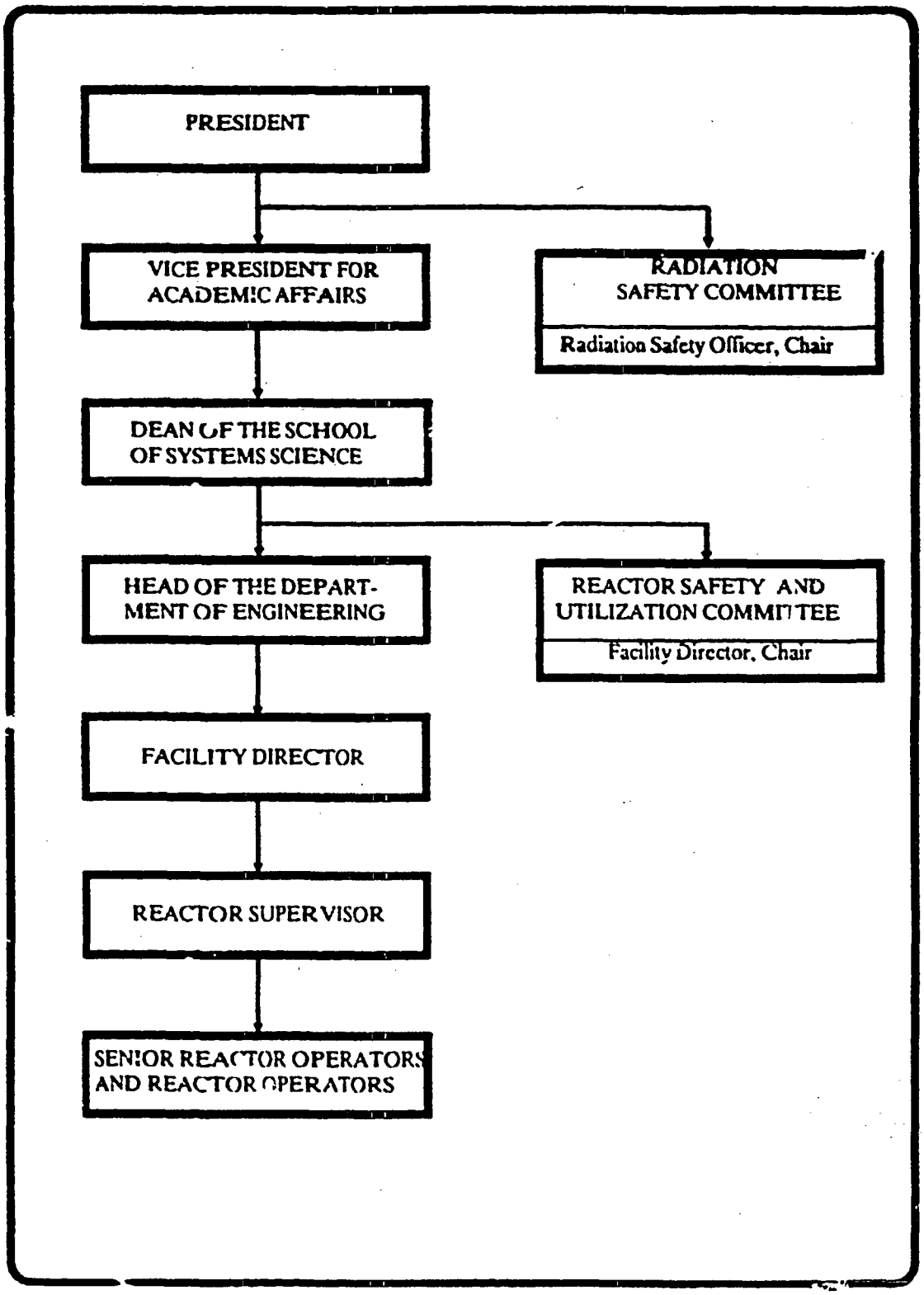

Figure 8-1 Organization for the Management and Operation of the Arkansas Tech University Reactor Facility

8.1.3 Dean of the School of Systems Science

Research and education programs associated with the School of Systems Science are administered through the office of the Dean. These programs include those associated with the Department of Engineering.

8.1.4 Head of the Department of Engineering

Research and education programs associated with the Department of Engineering are administered through the office of the Head of the Department of Engineering. The Arkansas Tech University reactor facility is one of the facilities that is associated with this department.

8.1.5 Radiation Safety Committee

The Radiation Safety Committee is established through the Office of the President of Arkansas Tech University. Responsibilities of the committee are broad and include all policies and practices regarding the license, purchase, shipment, use, monitoring, disposal, and transfer of radioisotopes or sources of ionizing radiation at Arkansas Tech University.

The President will appoint at least three members to the committee and appoint one as Chairperson. The committee will meet at least once each year on a called basis or as required to approve applications to use radioactive materials on campus. The Radiation Safety Committee will be consulted by the Reactor Safety and Utilization Committee concerning any unusual or exceptional action that affects the administration of the radiation safety program.

8.1.6 Radiation Safety Officer

The Radiation Safety Officer acts as the delegated authority of the Radiation Safety Committee in the implementation of policies and practices regarding the safe use of radioisotopes and sources of radiation.

8.1.7 Reactor Safety and Utilization Committee

The Reactor Safety and Utilization Committee is established through the office of the Dean of Systems Science at Arkansas Tech University. Broad responsibilities of the committee include the evaluation, review, and approval of facility standards for safe operation.

The Dean of the School of Systems Science will appoint at least three members to the committee that represent a broad spectrum of expertise appropriate to reactor technology. The committee will meet at least twice each calendar year or more frequently as circumstances warrant. The Reactor Safety and Utilization Committee will be consulted by the Facility Director of the reactor facility concerning unusual or exceptional actions that affect administration of the reactor program.

8.1.8 Facility Director

The Facility Director is responsible for the operation of the Center for Energy Studies, including the reactor facility, and will be qualified as a licensed Senior Operator for the Arkansas Tech University TRIGA reactor facility. Responsibilities of the Director include oversight of reactor operations, equipment maintenance, experiment operation, instruction of persons with access to laboratory areas, and development of research activities.

8.1.9 Reactor Supervisor

The Reactor Supervisor is responsible for day-to-day operation of the reactor facility as assigned by the Facility Director. These responsibilities include reactor operations, equipment maintenance, experiment operation, and other assigned activities associated with the reactor facility. An Arkansas Tech University TRIGA Operations Manual will be maintained by the Reactor Supervisor.

8.2 QUALIFICATIONS

8.2.1 General

Personnel associated with the research reactor will have a combination of academic training, job-related experience, health and skills commensurate with their level of responsibility to provide reasonable assurance that decisions and actions during all normal and abnormal conditions will be such that the reactor is operated in a safe manner [ANSI-15.4, 4.1].

8.2.2 Academic Administration and Radiological Safety

Administrative positions not principally responsible for facility operation (e.g., Vice President for Academic Affairs, Dean of the School of Systems Science, etc.) and staff positions of the radiological safety program (e.g., Radiation Safety Officer) are subject to qualification standards determined by the University. Administrative qualifications depend on academic credentials appropriate to the nature

of the University organization. Staff qualifications are subject to personnel descriptions developed for various University employment positions.

8.2.3 Facility Director

A combination of academic training and nuclear experience will fulfill the qualifications for the individual identified as the Facility Director. A minimum of six years of experience will be required. Academic training in engineering or science with completion of a baccalaureate degree may account for up to four of the six years experience [ANSI-15.4, 4.2].

8.2.4 Reactor Supervisor

A person with special training to supervise reactor operation and related functions will be designated as the Reactor Supervisor. A minimum of three years experience will be required. Academic training in engineering or science may be substituted for up to two of the three years experience. [ANSI-15.4, 4.4]

8.2.5 Operating Staff

Qualifications for operators will be determined by the ability of the individuals to successfully complete the training program and obtain an NRC certification as either an operator or a senior operator. Technicians will have a minimum of one year of working experience in their specialty or craft and will be qualified to perform the work assigned. Other persons with unescorted acess to the reactor facility will be qualified by academic experience or by special training and instruction by licensed operators of the facility [ANSI-15.4, 4.5 & 4.6].

8.3 REACTOR OPERATIONS

Operation of the reactor and activities associated with the reactor, control system, instrument system, radiation monitoring system, and engineered safety features will be the function of staff personnel with the appropriate license certification by NRC. Operation will include the implementation of required procedures, execution of appropriate experiments, actions related to safety, and the preparation of required reports and records.

8.3.1 Staffing

The minimum staffing when the reactor is not secured will be a licensed reactor operator in the control room and a second person present in the facility complex able to carry out prescribed written instructions. Unexpected absence of

the second person for as long as two hours to accommodate a personal emergency will be acceptable since immediate action will be taken to obtain a replacement. A designated licensed senior operator will be readily available on call during all periods when the reactor is not secured. The person on call will be considered available if less than 30 minutes is required to initiate a call request and respond to the site. A health physics-qualified individual will be readily available on call [ANSI-15.1, 6.1.3(1)].

Movement of any fuel or control rods and relocation of any in-core experiment with a reactivity worth greater than one dollar will require the presence of a licensed senior operator. Recovery from unplanned or unscheduled shutdowns will require documented concurrence from a licensed senior operator [ANSI-15.1,6.1.3(3)].

The staff required for performing experiments with the reactor will be determined by a classification system specified for the experiments. Requirements will range from the presence of a licensed operator for some routine experiments to the presence of a licensed senior operator and the experimenter for other less routine experiments.

Other activities that occur in the area of the reactor will require knowledge of a licensed operator but not necessarily the presence of the operator. Such activities include maintenance, handling of radioactive materials, and experiment preparation.

8.3.2 Procedures

Written procedures will be prepared, reviewed, and approved prior to initiating any of the following activities: (1) startup, operation, and shutdown of the reactor; (2) fuel loading, unloading, and movement within the reactor; (3) routine maintenance of major components of systems that could have an effect on reactor safety; (4) surveillance tests and calibrations required by the technical specifications or those that may have an effect on reactor safety; (5) personnel radiation protection, consistent with applicable regulations; (6) administrative controls for operations and maintenance and for the conduct of irradiations and experiments that could affect reactor safety or core reactivity, and (7) implementation of required plans such as emergency or security plans. These procedures will be reviewed by the Reactor Safety and Utilization Committee and approved by the Facility Director and such reviews and approvals documented in a timely manner [ANSI-15.1, 6.3].

Substantive changes to the procedures will be made effective only after documented review by the Reactor Safety and Utilization Committee and approval by the Facility Director. Minor modifications to the original procedures which do not change their original intent may be made by the Reactor Supervisor, but the modifications must be approved by the Facility Director within 14 days. Temporary deviations from the procedures may be made by the responsible licensed senior operator in order to deal with special or unusual circumstances or conditions. However, such temporary deviations will be documented and reported to the Facility Director [ANSI-15.1, 6.3].

8.3.3 Experiment Review and Approval

All experiments will be carried out in accordance with procedures reviewed by the Reactor Safety and Utilization Committee and approved by the Facility Director. Substantive changes to previously approved experiments will be made only after review by the Reactor Safety and Utilization Committee and approval by the Facility Director. Minor changes that do not significantly alter the experiment safety may be approved by the Reactor Supervisor or a designated senior reactor operator [ANSI-15.1, 6.4].

Each experiment will be designated as one of three classes. One class will consist of experiments that are routine in nature (e.g., reactor operation for calibration or instruction, irradiations such as neutron activation, etc.). This class of experiment will require only the minimum reactor staff specified in section 8.3.1 above. A few experiments may require the presence of both a licensed operator and the experimenter and will be designated as a separate class of experiment. The third class of experiments will require the presence of a licensed senior operator for such activities as relocation of in-core experiments with a reactivity worth greater than one dollar, fuel or control-rod relocations within the core region, or significant changes to shielding of core radiation.

8.4 ACTIONS AND REPORTS

Annual operating reports covering the activities of the reactor facility during the previous calendar year will be submitted to the NRC within three months following the end of the prescribed year. Each annual operating report will include the following information: (1) A narrative summary of reactor operating experience including the energy produced by the reactor or the hours the reactor was critical, or both; (2) the unscheduled shutdowns including, where applicable, corrective action taken to preclude recurrence; (3) tabulation of major preventive and corrective maintenance operations having safety significance; (4) tabulation of major changes

in the reactor facility and procedures, and tabulations of new tests or experiments, or both, that are significantly different from those performed previously and that are not described in this Safety Analysis Report, including conclusions that no unreviewed safety questions were involved; (5) a summary of the nature and amount of radioactive effluents released or discharged to environs beyond the effective control of Arkansas Tech University as determined at or before the point of release or discharge, including an estimate (to the extent practicable) of individual radionuclides present in the effluent, or a statement to the effect that the estimated average release after dilution or diffusion is less than 25 percent of the concentration allowed; (6) a summarized result of environmental surveys performed outside the facility; and (7) a summary of exposures received by facility personnel and visitors where such exposures are greater than 25 percent of that allowed [ANSI-15.1, 6.6.1].

8.4.2 Safety Limit Violation

Actions that will be taken in the case of a safety limit violation include: (1) the reactor will be shut down, and operations will not resume until authorized by the NRC; (2) the safety limit violation will be promptly reported to the Facility Director; (3) the safety limit violation will be reported to the NRC; and (4) a safety limit violation report will be prepared. The report will describe the applicable circumstances leading to the violation including, when known, the cause and contributing factors; effect of the violation upon reactor facility components, systems, or structures and on the health and safety of personnel and the public; and corrective action to be taken to prevent recurrence. The report will be reviewed by the Reactor Safety and Utilization Committee and any follow-up report will be submitted to the NRC when authorization is sought to resume operation of the reactor [ANSI-15.1, 6.5.1].

8.4.3 Release of Radioactivity

Actions that will be taken in the case of a release of radioactivity from the site above allowed limits include: (1) reactor conditions will be returned to normal or the reactor will be shutdown (if it is necessary to shutdown the reactor to correct the occurrence operations will not be resumed unless authorized by the Facility Director); (2) the occurrence will be reported to the Facility Director and to the NRC as required by technical specifications; and (3) the occurrence will be reviewed by the Reactor Safety and Utilization Committee at their next scheduled meeting. Prompt reporting of the event by telephone to the NRC will occur not later than the following working day and confirmed in writing promptly (e.g., by telecopy). A fol-

lowup written report that describes the circumstances of the event will be submitted to the NRC within 14 days of the event [ANSI-15.1, 6.5.2 & 6.6.2].

8.4.4 Other Reportable Occurrences

Other unplanned events that will be reported are: (1) operation with actual safety-system settings for required systems less conservative than the limiting safety-system settings specified in the technical specifications; (2) operation in violation of limiting conditions for operation established in the [illegible]l specifications unless prompt remedial action is taken; (3) a reactor safety [illegible]nponent malfunction which renders or could render the reactor safety sy[illegible]le of performing its intended function unless the malfunction or condit[illegible]overed during maintenance tests or periods of reactor shutdown (NOTE: Where components or systems are provided in addition to those required by the technical specifications, the failure of the extra components or system is not considered reportable provided the minimum number of components or systems specified or required perform their intended safety function); (4) an unanticipated or uncontrolled change in reactivity greater than one dollar (NOTE: Reactor trips resulting from a known cause are excluded); (5) an abnormal and significant degradation in reactor fuel, or cladding, or both, coolant boundary, or containment boundary (excluding minor leaks), where applicable, which could result in exceeding prescribed radiation exposure limits of personnel or environments, or both; (6) an observed inadequacy in the implementation of administrative or procedural controls such that the inadequacy causes or could have caused the existence or development of an unsafe condition with regard to reactor operations [ANSI-15.1, 6.6.2].

Actions that will be taken in the case of one of these other reportable occurrences include: (1) reactor conditions will be returned to normal or the reactor will be shut down (if it is necessary to shut down the reactor to correct the occurrence, operations will not be resumed unless authorized by the Facility Director); (2) the occurrence will be reported to the Facility Director and to the NRC as required by technical specifications; and (3) the occurrence will be reviewed by the Reactor Safety and Utilization Committee at their next scheduled meeting. Prompt reporting of the event by telephone to the NRC will occur not later than the following working day and confirmed in writing promptly (e.g., by telecopy). A followup written report that describes the circumstances of the event will be submitted to the NRC within 14 days of the event [ANSI-15.1, 6.5.2 & 6.6.2].

8.4.5 Other Reports

Planned actions that will be reported to the NRC within 30 days include: (1) permanent changes in the facility organization involving the Dean of the School of Systems Science, Head of the Department of Engineering, or the Facility Director; and (2) significant changes in the transient or accident analysis as described in the Safety Analysis Report. [ANSI-15.1, 6.6.2(2)].

8.5 RECORDS

Records of the following activities will be maintained and retained for the periods specified below. The records may be in the form of logs, data sheets, or other suitable means. The required information may be contained in single or multiple records, or a combination thereof.

8.5.1 Records to be Retained for a Period of at Least Five Years or for the Life of the Component Involved if Less than Five Years

The records to be retained for a period of at least five years or for the life of the component involved if less than five years include: (1) normal reactor facility operation (but not including supporting documents such as checklists, log sheets, etc., which will be maintained for a period of at least one year); (2) principal maintenance operations; (3) reportable occurrences; (4) surveillance activities required by the technical specifications; (5) reactor facility radiation and contamination surveys where required by applicable regulations; (6) experiments performed with the reactor; (7) fuel inventories, receipts, and shipments; (8) approved changes in operating procedures; and (9) records of meeting and audit reports of the Reactor Safety and Utilization Committee [ANSI-15.1, 6.7.1].

8.5.2 Records to be Retained for at Least One Training Cycle

The records to be retained for at least one training cycle include the retraining and requalification of licensed operations personnel. Records of the most recent complete cycle will be maintained at all times the individual is employed by Arkansas Tech University [ANSI-15.1, 6.7.2].

8.5.3 Records to be Retained for the Lifetime of the Reactor Facility

The records to be retained for the lifetime of the reactor facility include: (1) gaseous and liquid radioactive effluents released to the environs; (2) offsite environmental monitoring surveys required by technical specifications; (3) radiation exposure for all personnel monitored; and (4) drawings of the reactor facility. The

annual report will contain most of this information and will be retained as the record of the applicable information [ANSI-15.1, 6.7.3].

REFERENCES

1. "The Development of Technical Specifications for Research Reactors," ANSI/ANS-15.1-1982.

2. "Selection and Training of Personnel for Research Reactors," ANSI/ANS-15.4-1988.

9. QUALITY ASSURANCE PROGRAM

9.1 INTRODUCTION

Characteristics of uranium loaded zirconium hydride fuel used in the TRIGA reactor provide substantial benefits to safe reactor operation. Many accident situations are simulated by normal operation of the reactor in either pulse mode or steady state mode. Other features such as fission product retention, stainless steel cladding design, facility engineered features, and periodic schedule of operation combine with routine operation procedures to decrease the consequences of failure of reactor components. The limited scope of application of formal quality assurance criteria to the Arkansas Tech University reactor facility is due to the fact that most parts and procedures associated with operation of the TRIGA type reactor are not relevant to the safety and health of the public, since failure of most parts and procedures shuts the system down.

This section provides the requirements for establishing, managing, conducting, and evaluating the quality assurance program for the design, construction, testing, modification, and maintenance of the reactor facility and associated experiments. The level of quality assurance effort applied to the Arkansas Tech University research reactor activities will be consistent with the importance of those activities to safety. Quality assurance effort is applied to safety-related items, which are defined as those physical structures, systems, and components whose intended functions are to either prevent accidents that could cause undue risk to the health and safety of the public, or to control and mitigate the consequences of such accidents. The safety-related items included in the quality assurance program will be, as a minimum, those of the reactor safety and protection system, engineered safety features, and the radiation monitoring system, as identified in the Limiting Conditions for Operations section of the Technical Specifications for the reactor facility [ANSI-15.8, 1].

9.2 PROGRAM REQUIREMENTS

9.2.1 Responsibility

Arkansas Tech University is responsible for the establishment and implementation of a quality assurance program consistent with the schedule for accomplishing the activities associated with the reactor facility. Structures, systems, and components to be covered by the quality assurance program will be identified. The organizations participating in the program and the designated functions of these organizations will also be identified. Table 9-1 lists the responsibilities and key personnel in the quality assurance program at Arkansas Tech University.

Table 9-1 Responsibilities and Key Personnel

	RESPONSIBILITIES	KEY UNIVERSITY PERSONNEL
1.	Establish and Implement Program, Safety-Related Item Identification	Facility Director or Reactor Supervisor
2.	Unresolved Issues	Dean of the School of Systems Science or Head of the Department of Engineering
3.	Delegated Functions	Faculty and Staff
4.	Specialized Functions	Specified Personnel

9.2.2 Organization

The organization applied to quality assurance activities at Arkansas Tech University will be part of the normal university administration structure as shown in Figure 9-1. The Facility Director, assisted by the Reactor Supervisor, will develop and implement the quality assurance program and identify safety-related items. Unresolved issues associated with the quality assurance program will be reported to the Dean of the School of System Science and to the Head of the Engineering Department. Execution of specific elements of the program may be delegated to persons in the university organization or other organizations as appropriate. Such delegation may be assigned to committees, faculty, researchers, or staff as needed for specific

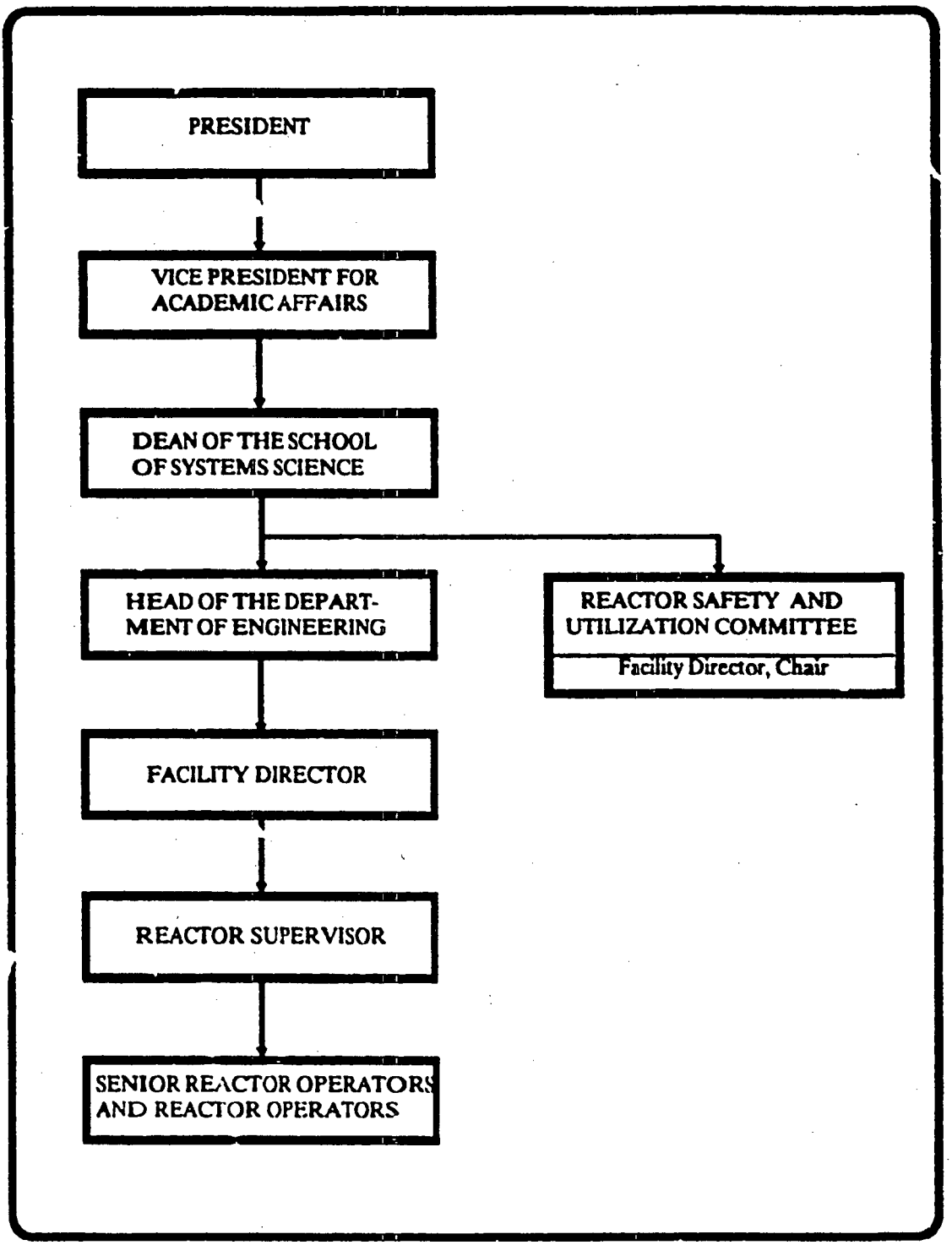

Figure 9-1 Organization for the Quality Assurance Program for the Arkansas Tech University Research Reactor

program implementation. Non-university organizations or personnel may supplement university personnel when specialized qualifications are necessary for specific quality assurance tasks.

9.2.3 Documentation

All activities affecting the safety-related items identified in accordance with the quality assurance program will be formally identified and documented. Documentation will include the applicable procedures, reviews, and other measures to be applied [ANSI-15.8, 2.3].

Each safety-related activity, structure, system, or component will be given a unique identifier (e.g., A, B, C, etc.) and the applicable quality assurance controls for each identified item will be documented using the format shown in Table 9-2.

9.3 QUALITY ASSURANCE CONTROLS

9.3.1 Design Control

Measures will be established and documented to assure that applicable codes, standards, and regulatory requirements are correctly incorporated into design documents for safety-related items. These measures will also provide verification of adequacy of design through performance of design reviews, alternate calculations, or the execution of a test program. Verification will include checks of compatibility of materials, suitability of application of materials, parts and processes; accessibility for in-service inspection, maintenance and repair; proper interfacing of subsystems; and completeness of acceptance criteria [ANSI-15.8, 2.4] .

The verification will be performed by individuals other than those who perform the original design, but who may be from the same organization. Modifications to systems will be subject to design control measures commensurate with those applied to the original design [ANSI-15.8, 2.4].

9.3.2 Procurement Control

Measures will be established for the inclusion of applicable codes, standards, and regulatory requirements in procurement documents for safety-related items. To the extent determined by the safety requirements of the final system, procurement documents will require contractors or subcontractors to provide appropriate quality assurance controls, which may include, but are not limited to, functions such as inspections, tests, and controls over materials, processes and nonconformances.

Table 9-2 Format for Safety-Related Item QA Control Documentation

1.0 GENERAL ITEM DESCRIPTION

- 1.1 TITLE - Identification and description of the safety-related item
- 1.2 PARTICIPATION - Supplemental organization identification and their function(s)
- 1.3 DOCUMENTS - Listing of applicable procedures or special measures for the item

2.0 QUALITY ASSURANCE CONTROLS

- 2.1 DESIGN CONTROL
  - 2.1.1 Codes, Standards, and Regulations
  - 2.1.2 Method of Verification
  - 2.1.3 Modifications Proposed
- 2.2 PROCUREMENT CONTROL
  - 2.2.1 Codes, Standards, and Regulations
  - 2.2.2 Quality Assurance Specifications
  - 2.2.3 Proposed Changes Enacted
  - 2.2.4 Procurement Conformance Method
- 2.3 DOCUMENT CONTROL
- 2.4 MATERIAL CONTROL
  - 2.4.1 Special Procedures Required
  - 2.4.2 Equipment Required
  - 2.4.3 Personal Qualifications
- 2.5 PROCESS CONTROL
  - 2.5.1 Special Procedures Required
  - 2.5.2 Special Equipment
  - 2.5.3 Personal Qualifications

3.0 QUALITY ASSURANCE INSPECTION AND CORRECTIVE ACTION

- 3.1 INSPECTION PROGRAM DESCRIPTION
- 3.2 TEST PROGRAM DESCRIPTION
- 3.3 MEASUREMENT EQUIPMENT
- 3.4 NONCONFORMANCE ITEM AND DISPOSITION
- 3.5 CORRECTIVE ACTIONS INSTITUTED

4.0 QUALITY ASSURANCE RECORDS LIST

Changes to procurement documents will be subject to controls commensurate with those for the original procurements [ANSI-15.8, 2.5].

Measures will be established and documented to assure that procured items or services conform to the procurement documents. These measures may include source evaluation, contractor furnished evidence, inspection at source, or inspection upon receipt, as appropriate [ANSI-15.8, 2.5].

9.3.3 Document Control

Measures will be established to control the development, revision, and use of documents and drawings which define activities affecting the quality of safety-related items [ANSI-15.8, 2.6].

9.3.4 Material Control

Measures will be established, as necessary, to control the identification, handling, storage, shipping, cleaning, and preservation of safety-related material and equipment [ANSI-15.8, 2.7].

9.3.5 Process Control

Provisions will be made for establishing and documenting measures to assure that all processing of materials for safety-related items is accomplished under controlled conditions in accordance with applicable codes, standards, and specifications, using qualified personnel and procedures. Controls will be applied to the extent appropriate, with particular emphasis on those for specific processes, such as crimping, soldering, welding, heat treating, cleaning, and non-destructive examination. Procedures, equipment, and qualifications of personnel will be defined for those special processes not covered by existing codes and standards [ANSI-15.8, 2.8].

9.3.6 Experimental Equipment

The quality assurance program will provide controls over the fabrication and installation of experimental equipment to the extent that these relate to reactor safety [ANSI-15.8, 2.14].

9.4 QUALITY ASSURANCE INSPECTION AND CORRECTIVE ACTION

9.4.1 Inspection

A program for inspection of activities affecting quality of safety-related items will be established. The inspection program will apply to procurement, construction, modification, maintenance, and experiment equipment fabrication, and will include, to the applicable extent, the following: (1) inspection procedures, specifying the characteristics to be inspected, sampling plans, and acceptance criteria; (2) description of process monitoring action for those situations in which inspection is impossible or disadvantageous; (3) specification of mandatory inspection hold points; (4) procedures for identifying inspection and test status, so that only items that have passed the required inspections and tests are used, installed, or operated (nonconforming items will be clearly identified); and (5) procedures for required in-service inspection of completed systems, structures, and components [ANSI-15.8, 2.9].

Inspection will be performed by individuals other than those who performed the activity being inspected, but who may be from the same organization [ANSI-15.8, 2.9].

9.4.2 Test Control

A test program will be established to assure that all required tests of safety-related items are identified and documented. Testing will be performed in accordance with written procedures which incorporate or reference the requirements and acceptance limits from design documents [ANSI-15.8, 2.10].

The test program will cover all required tests, including prototype qualification tests, proof tests prior to installation, and functional tests [ANSI-15.8, 2.10].

Test procedures will specify appropriate prerequisite and monitoring requirements, equipment to be used, personnel training requirements, suitable environmental conditions, and provisions for data acquisition and documentation [ANSI-15.8, 2.10].

9.4.3 Control of Measuring and Test Equipment

Measures will be established to assure that tools, gages, instruments, and other measuring and testing devices used in activities affecting the quality of safety-related items are available, properly controlled, properly calibrated, and adjusted at the required intervals [ANSI-15.8, 2.11].

9.4.4 Nonconforming Material and Parts

Procedures will be provided for control of materials or parts, involved with safety-related items, which do not conform to requirements, in order to prevent their inadvertent use, and will include provisions for identification, documentation, segregation, and disposition of such materials. Disposition of nonconforming materials will be accomplished after a review by responsible personnel or groups and will consist of acceptance, repair, rework, or rejection [ANSI-15.8, 2.12].

9.4.5 Corrective Action

Significant conditions detrimental to the quality of safety-related items, such as failures, malfunctions, and deficiencies, will be promptly identified, the cause determined, and corrective action taken to preclude repetition. Measures will be established to assure that corrections are in accordance with design requirements and are documented [ANSI-15.8, 2.13].

9.5 QUALITY ASSURANCE RECORDS AND AUDITS

9.5.1 Quality Assurance Records

The Arkansas Tech University Quality Assurance Program includes documentation of activities affecting quality of safety-related items as discussed above. The records will include, for example: inspection and test results, results of quality assurance reviews, quality assurance procedures, and engineering analysis in support of design changes and modifications. Records will be identifiable and retrievable throughout their retention period. Retention requirements will be established for these records, including duration, location, and responsibility. In the case of those records which define the "as built" condition of items in the system, the retention period will be the life of the system [ANSI-15.8, 2.15].

9.5.2 Audits

Audits will be performed to verify compliance with the quality assurance program and to determine effectiveness of the program. The audits will be performed in accordance with written procedures, and results will be documented and reported to Arkansas Tech University management. Audits will be performed by individuals not having direct responsibilities in the areas being audited. Follow-up action, including re-audit of deficient areas, will be taken where indicated [ANSI-15.9, 2.16].

REFERENCES

1. "Quality Assurance Requirements for Research Reactors," Regulatory Guide 2.5, Rev. 0-R, May 1977 (Reissued October 1977).

2. "Quality Assurance Requirements for Research Reactors," ANSI/ANS-15.8-1976 (Reaffirmed December 1986).

10. RADIATION PROTECTION PROGRAM

10.0 INTRODUCTION

This section describes the elements of the Arkansas Tech University radiation protection program and establishes the guidelines to be applied to provide an acceptable level of radiation protection for personnel at the reactor facility and the general public consistent with keeping exposures and releases as low as reasonably achievable.

10.1 POLICY AND ORGANIZATION

10.1.1 Management and Policy

The Arkansas Tech University radiation protection program is based on the commitment to keep exposures to personnel and the general public as low as reasonably achievable (ALARA). This commitment forms one of the bases for the operating procedures and the procedures on radiation protection [ANSI-15.11, 3.1].

Measures will be taken as part of the radiation protection program to:

a. Specify administrative review levels for personnel exposures.
b. Conduct an annual evaluation of exposures and releases to determine if they are as low as reasonably achievable.
c. Ensure that the Radiation Safety Officer and the Reactor Supervisor have clearly defined responsibilities within the radiation protection organization.
d. Provide radiation protection personnel sufficient authority to carry out assigned responsibilities as defined in the radiation protection program.
e. Ensure the research reactor personnel receive radiation protection training.
f. Consider suggestions and recommendations for modifications to operating and maintenance procedures and to reactor equipment and facilities to achieve reductions in radiation exposure.
g. Provide the equipment and supplies necessary for the implementation of the radiation protection program [ANSI-15.11, 3.1].

10.1.2 Radiation Protection Responsibilities

The Reactor Supervisor has responsibility and authority to implement the radiation protection program for the reactor facility. This responsibility includes the authority to act on questions of radiation protection, the acquisition of appropriate training for radiation protection, and the reporting to management of problems associated with radiation protection [ANSI-15.11, 3.2].

The Reactor Supervisor has access to other individuals and groups responsible for radiation safety including the Radiation Safety Officer, Radiation Safety Committee, and the Reactor Safety and Utilization Committee. Contact with the Radiation Safety Officer will occur on an as needed basis and contact with the Radiation Safety Committee and the Reactor Safety and Utilization Committee will occur on a periodic basis [ANSI-15.11, 3.2].

The Reactor Supervisor will have special training to supervise reactor operation and related functions. A minimum of three years of nuclear experience will be required. Academic training in engineering or science may be substituted for up to two of the three years experience. The special training will include specific courses in radiation protection and health physics [ANSI-15.11, 3.2].

10.1.3 Organizational Relationships

The relationship between the individual responsible for the radiation protection program (i.e., the Reactor Supervisor) and other persons and committees within the reactor facility organization are shown in Figure 8-1. Liaison between the Reactor Supervisor and the other groups and committees will be maintained to ensure effective radiation protection and maintenance of exposure and releases as low as reasonably achievable [ANSI-15.11, 3.3].

10.1.4 Review and Audit

Provisions for periodic audit of elements of the radiation protection program by the Reactor Safety and Utilization Committee will be established in accordance with the facility technical specifications [ANSI-15.11, 3.4].

10.2 TRAINING

All personnel and visitors entering restricted areas of the reactor facility will either receive training in radiation protection sufficient for the work or visit, or be escorted by an individual who has received such training [ANSI-15.11, 4.1].

10.2.1 Initial Training

All personnel permitted unescorted access to the reactor facility will receive training in radiation protection. The initial training will cover the following areas in sufficient depth for the specific functions:

a. Access and egress control and escort procedures.
b. Radiological safety principles, policies, and procedures.
c. Personnel dosimetry.
d. Monitoring instruments and protective devices.
e. Protective equipment.
f. Radiation areas and high radiation areas.
g. Use, storage, and transfer of radioactive materials.
h. Posting and labeling requirements.
i. ALARA and exposure limits.
j. Radiation hazards and health risks.
k. Emergency response requirements for individual action [ANSI-15.11, 4.2].

10.2.2 Retraining

The need for retraining in radiation protection will be determined by the Facility Director in consultation with the Reactor Supervisor and the Radiation Safety Officer. Such retraining will be conducted at least biennially and will include a condensed version of the initial training with emphasis on changes in policies, procedures, requirements, and facilities. Operations personnel who participate in a requalification program that includes radiation protection will not participate in the retraining program [ANSI-15.11, 4.3].

10.3 RADIOACTIVE MATERIAL CONTROL

Physical control of radioactive material will be provided as an essential part of the radiation safety program. Identification, storage in identified areas, and inventories of radioactive material will be used to maintain materials control. For certain radioactive materials, containment, isolation, shielding, and ventilation may be of vital importance and will be provided as necessary to satisfy ALARA requirements. Transfers of radioactive materials will be made only to authorized recipients [ANSI-15.11, 5].

10.3.1 Special Nuclear Material

This category of radioactive material includes new, in-core and spent fuel elements and other special nuclear material. These materials will be located in a restricted area or be under the control of authorized individuals. Individual items will have a unique identification if the U233, U235, or plutonium content is 0.5 g or greater; except for Pu238 for which a unique identification will be used if the content is 0.05 g or greater. Records of inventories and transfers will be maintained [ANSI-15.11, 5.1].

10.3.2 By-product Material and Radioactive Waste

These materials will be maintained or stored in a restricted area or be under the control of authorized individuals until they are transferred or disposed of as waste. Records of transfers out of the facility or disposal will be maintained [ANSI-15.11, 5.2 & 5.3].

10.3.3 Other Radioactive Material

Radioactive reactor components, experimental facilities, contaminated tools and fixtures, and other radioactive materials will be included in the program as required on the basis of radiation or contamination levels. These materials will be maintained in a restricted area or be under the control of authorized individuals. They may be released by authorized individuals upon decontamination or may be disposed of as waste [ANSI-15.11, 5.4].

10.4 RADIATION MONITORING

The radiation protection program will provide for detection and evaluation of occupational and nonoccupational radiation exposures resulting from operation of the reactor facility. Radiation and radioactive measurements will be made as necessary with acceptable levels of sensitivity and accuracy to maintain exposures to radiation and effluent releases within the established ALARA program. Specific procedures will be available for the monitoring categories discussed below, where applicable [ANSI-15.11, 6].

10.4.1 Radioactive Effluent Monitoring

A program for monitoring airborne and liquid effluent will be established. If it can be shown by analytical or other methods that airborne emissions of radionuclides to the environment do not exceed those amounts that cause a dose

equivalent of 25 mrem/y to the whole body, at the location of interest, monitoring will not be required [ANSI-15.11, 6.1].

Analysis of the concentration of radioactive material will be made on a representative sample of each release, or routinely in the case of continuous or routine releases. Analysis for specific isotopes will generally be performed. The guidelines of ANSI-15.11-1987 will be utilized for acceptable methods of monitoring noble gas effluents, gaseous or airborne radioactive materials, and liquid effluents [ANSI-15.11, 6.1].

10.4.2 Facility Monitoring

A program for monitoring the facility will include airborne radioactivity monitoring and area radiation monitoring.

Facility airborne radioactivity monitoring equipment and procedures will be commensurate with projected airborne radioactivities resulting from facilities operation. Monitoring will occur on a continuous basis during reactor operation or activities involving fuel, core, or experiment facilities and will provide measurements for routine, abnormal, and emergency conditions [ANSI-15.11, 6.2.1].

Facility area radiation monitoring will be provided for high radiation areas. This will be accomplished with radiation area monitors with remote readout or with portable instruments to be used when the area is made accessible to personnel. Periodic measurement of accessible areas will occur in locations with significant radiation levels that are not continuously monitored to identify potentially changing conditions or parameters [ANSI-15.11, 6.2.2].

Personnel will monitor their hands and feet for contamination when leaving known contaminated areas, or restricted areas that are potentially contaminated. If contamination is detected, then a check of exposed areas of the body and clothing will be made. Monitoring control points will be established for this purpose [ANSI-15.11, 6.2.3(1)].

Tools and equipment will be surveyed for contamination before removal from contaminated areas or restricted areas where contamination is likely [ANSI-15.11, 6.2.3(2)].

Contaminated areas and restricted areas where contamination is likely will be surveyed routinely for contamination levels. Monitoring frequency and method will be adequate to reveal significant changes, to allow accurate assessment of working

conditions, and to provide an accurate basis for protective equipment requirements [ANSI-15.11, 6.2.3(3)].

Specific limits will be established for removable and fixed contamination of personnel and equipment. Instructions with sufficient sensitivity to measure contamination within the limits will be provided. Contamination levels for unconditional release will not exceed the limits specified in ANSI-15.11-1987, as applicable [ANSI-15.11, 6.2.3(4)].

10.4.3 Personnel Monitoring

Personnel dosimetry will be required for access to reactor areas and some other facility activities. Monitoring devices will typically be film badges with pocket dosimeters and thermoluminescent detectors for supplemental measurements. Other personnel monitoring such as bioassays or whole body counting will be applied as determined by the activity and conditions of radiation exposure situations. Personnel will use supplemental dosimetry during activities that deviate substantially from routine operations with supplemental dosimetry also provided for persons visiting areas with potential radiation exposures [ANSI-15.11, 6.3].

10.5 INSTRUMENTATION

Instrumentation for the evaluation of radiation exposures from routine, abnormal, and emergency situations will consist of fixed area monitors, portable survey monitors and appropriate sampling methods. The minimum instrumentation available during reactor operation will consist of fixed area gamma dose rate monitors, continuous air particulate monitor, portable thin window GM tube survey meter, portable neutron sensitive counter, and pocket dosimeters. Other detection equipment will be available such as alpha-beta proportional counter, multichannel gamma pulse height analyzer, thermoluminescent detector, alpha scintillation detector, high and low range beta-gamma dose rate meters and GM tube friskers [ANSI-15.11, 7.1].

10.5.1 Fixed Area Monitors

Fixed area gamma monitors will have remote readouts with audible and visual alarms at the reactor control console. Local readouts will be provided in areas with significant radiation levels and routine personnel access.

10.5.2 Airborne Radioactivity Monitors

A continuous air particulate monitor with audible and visual alarms will be functional in the reactor vicinity during reactor operations. A gas monitor system for the noble gas effluent, argon-41, may also be operable during operation or sufficient data will be available to demonstrate a calculated release quantity.

10.5.3 Laboratory Instruments

Portable survey monitors for alpha, beta, gamma, or neutron radiation will be maintained for area surveys of laboratory and experiment areas. Supplemental measurements will be available with alpha-beta proportional counters or multichannel gamma pulse height analyzers.

10.5.4 Liquid Effluents

Liquid effluents will be monitored by sampling methods to determine gross alpha-beta activity. Gamma spectral analysis will be applied for identification of isotope mixtures that require substantial dilution for disposal. Liquid effluents will be released in batches after storage for decay and dilution determinations. Reactor coolant will be monitored for radioactivity in the coolant or purification loops as a supplemental indicator of water activity.

10.5.5 Range and Spectral Response

The range and spectral response of the instrumentation provided will reliably cover the kinds of radiation and the levels expected during normal operations and will extend from those levels through radiation levels postulated for emergency conditions. Full coverage of this projected range of radiation levels may not be present in a single instrument, but will be present in a combination of instruments available. [ANSI-15.11, 7.2]

10.5.6 Calibration

Instruments will be calibrated at least annually. Calibration will also be performed if a response check or a function test indicates that the calibration has changed. More frequent calibrations will be performed if the instrument is subjected to extreme operating conditions, hard usage, or corrosive environment. Recalibration will be performed following maintenance or significant adjustment [ANSI-15.11, 7.3].

10.6 ALARA PROGRAM

The objectives of the Arkansas Tech University ALARA (As Low As Reasonably Achievable) program are to maintain exposures to radiation, and releases of radioactive effluents at levels that are as low as reasonably achievable within the established dose equivalent and effluent release recommendations of the National Council on Radiation Protection and Measurements (NCRP), the International Commission on Radiation Protection (ICRP), and Title 10 of the Code of Federal Regulations, Part 20. These dose equivalents and release recommendations are considered upper limits and are not considered acceptable if it is reasonable to reduce these levels. Design features and operational methods will be utilized to achieve the ALARA objectives at the reactor facility [ANSI-15.11, 8].

10.6.1 Facility Design

Facility design objectives and features will be utilized to the extent applicable for the control of radiation, contamination, and radioactive effluents. Design features that will include consideration of the ALARA objectives include shielding; materials of construction; radioactive material processing, storage, and disposal facilities; radiation monitoring systems; and facility layout for personnel traffic and equipment maintainability and accessibility [ANSI-15.11, 8.1.1].

The design objectives for contamination control include selection of features and materials with radioactivity retention characteristics that minimize the spread of contamination. These design features will include ventilation and filter systems, confinements and containments to minimize the spread of contamination, and materials of construction that minimize the spread of contamination and facilitate decontamination [ANSI-15.11, 8.1.2].

The design features to control radioactive effluents include building confinement or containment integrity and exhaust system features for airborne effluents, radioactive waste disposal facilities for liquid effluents, and radioactivity monitoring systems for monitoring effluents and waste prior to disposal [ANSI-15.11, 8.1.3].

10.6.2 Facility Operation

Facility operating methods and factors will be considered and implemented to the extent applicable for the control of radiation exposures, contamination, and radioactive effluents during routine and special operations. This includes planning, operation, review, and audit to address the ALARA objectives [ANSI-15.11, 8.2].

Planning during facility operation will consider the following:

a. Assessment of radiation, contamination, airborne radioactivity, and mechanical difficulties which might be encountered in performing the operation.
b. Consideration of radioactive decay times.
c. Assessment of the feasibility of reducing the existing radiation levels by draining, flushing, or other decontamination methods, or by removing and transporting the component to a lower radiation area.
d. Consideration of personnel ingress and egress to work areas.
e. Assessment of the response capability for coping with abnormal operational occurrences.
f. Providing portable or temporary shielding
g. Providing portable or temporary ventilation systems, or temporary enclosures and covering, or both.
h. Providing for personnel preoperational briefing for those assigned to perform tasks in high radiation areas.
i. Performing "dry runs" or mock-up equipment to train personnel and identify problems that may be encountered in the actual situation, and to select and qualify special tools and procedures.
j. Providing special communication systems.
k. Providing radiation monitoring instruments in adequate numbers to permit accurate measurements and rapid evaluations of the radiation and contamination levels encountered [ANSI-15.11, 8.2.1].

Supervision and surveillance during operations will be performed to assure that appropriate procedures are followed and that planned precautions are observed. Management will be promptly notified when dose limits are approached or when unanticipated problems develop during the course of the work. Protective equipment will be used properly and proper functioning of such equipment will be checked [ANSI-15.11, 8.2.2].

Review and audit for ALARA objective conformance during facility operation will include:

a. Review of activities after completion to verify that planning was sufficient.
b. Review of occupational exposures at least quarterly by the Reactor Supervisor.
c. Review of occupational exposures above established limits by management.

d. Periodic review and audit of the ALARA program by the Reactor Safety and Utilization Committee.

e. Periodic assessment by the Radiation Safety Committee and/or the Reactor Safety and Utilization Committee, at least annually, of the effectiveness of the radiation protection program in order to institute possible changes and improvements to reduce overall exposures and releases. [ANSI-15.11, 8.2.3]

10.7 RECORDS

Records on the radiation protection program will be maintained in accordance with the records retention requirements of the technical specifications. The records to be retained include:

a. Dose equivalent and bioassay data where applicable for all personnel who have worked at the facility.

b. Radioactive material inventory, transfer, and disposal.

c. Radiation survey results.

d. Surface contamination survey results.

e. Airborne radioactivity survey results.

f. Radioactive effluent results.

g. Training program descriptions and attendance.

h. Environmental monitoring results.

i. Instrument calibration results.

j. Records of review and evaluation of unusual radiological occurrences [ANSI-15.11, 9].

10.8 EMERGENCY PLAN AND RADIATION PROGRAM REVIEW

An Emergency Plan will be established, maintained, and implemented by the Reactor Supervisor. The plan will exist as a separate document of the radiation safety program. A review of the radiation safety program and emergency plan will be integrally related. Some partial assessment of the radiation safety program will occur each year such that a complete assessment occurs during a two year period. The two year period also applies to the emergency plan.

REFERENCES

1. "Radiation Protection at Research Reactor Facilities," ANSI/ANS-15.11-1987.

2. Title 10, Code of Federal Regulations, Part 20.

11. FIRE PROTECTION

11.0 INTRODUCTION

This section describes the criteria for Arkansas Tech University's fire protection of the reactor facility and for the reactor safety-related systems included in the facility. This protection stresses preservation of the capability to achieve and maintain safe shutdown of the reactor, and includes consideration of both direct fire hazards and indirect or consequential hazards [ANSI-15.17, 1.1].

The fire protection objective is to provide a reasonable assurance that safety-related systems can perform their intended functions and that the defined loss criteria are met. For the purpose of fire protection, loss criteria includes protection of safety-related systems, prevention of radioactive releases, personnel protection, minimization of property damage, and maintenance of operation continuity. Three components of fire protection to be applied at Arkansas Tech University are passive fire protection, active fire protection, and fire prevention [ANSI-15.17, 3].

11.1 FIRE PROTECTION COMPONENTS

Each of the three components of fire protection will be applied to the design, operation, and modification of the reactor facility and its components.

11.1.1 Passive Fire Protection Elements

Passive fire protection is achieved by limiting fire effects through inherently fire safe design features such as isolation, separation, selection of materials, and system design. Each of these features has the potential to provide intrinsic safety and does not require automatic equipment operation or personnel response [ANSI-15.17, 3]. Passive fire protection features to be considered for the reactor facility include:

a. Separation of safety-related systems from each other by barriers, open space, or both.
b. Use of raised sills or curbs for the containment of flammable or combustible liquid spills.

c. Fragile walls for the release of overpressures.

d. Non-combustible or fire resistive construction materials.

e. Curbs and/or drains to control run-off of fire protection water.

f. Arrangement and protection of raceways, cable troughs or trays, and distribution frames utilized to carry redundant safety-related system control and power wiring, so as to maintain the independence of redundant channels under fire conditions.

g. Selection of sealing materials, electrical insulation, structural finishes, adhesives, or linings, so as to minimize fire hazards.

h. Ensuring that penetrations in fire barriers have fire resistant ratings compatible with the purpose of the barrier [ANSI-15.17, 5.1].

11.1.2 Active Fire Protection Elements

Active fire protection is achieved by limiting fire effects through the provision of features such as fire suppression systems, fire detection systems, ventilation control, and manual fire fighting operations, which require automatic equipment operation or personnel response [ANSI-15.17, 3].

Active fire protection features to be considered for the reactor facility include:

a. Thermal detectors.

b. Smoke detectors.

c. Automatic sprinkler protection.

d. Water deluge or spray protection.

e. Special hazard protection such as a carbon dioxide system or Halon system.

f. Ventilation control.

g. Fire doors and/or dampers.

h. Inspection, testing, and maintenance activities necessary to ensure the reliability of any of these selected features.

i. Manual fire fighting actions and systems such as fire pumps.

j. Pre-fire planning, fire brigade training, and fire department response planning [ANSI-15.17, 5.2].

11.1.3 Fire Prevention Elements

Fire prevention is achieved by enforcing administrative procedures for control of combustibles loading and control of ignition sources in order to minimize the probability of fire occurrence [ANSI-15.17, 3].

The elements included under fire prevention are control of ignition sources and control of combustible material quantities and location. This requires procedures for the selection of construction materials and equipment and for storing and handling of equipment and materials. Ignition sources such as cutting, welding, and open-flame operations, electrical equipment, and smoking will be controlled by administrative procedures [ANSI-15.17, 5.3].

11.2 FIRE PROTECTION CONTROLS

Management of the Arkansas Tech University reactor facility is committed to fire protection and the controls necessary to ensure adequate fire protection. These controls will consist of actions of equipment, actions of facility staff, and interactions with trained fire protection organizations [ANSI-15.17, 4.1].

11.2.1 Facility Fire Protection Organization

The organization for fire protection consists of the organization shown in Figure 8-1 for the operation of the reactor facility. The Facility Director, assisted by the Reactor Supervisor, is responsible for the maintenance of fire protection equipment and inspections for fire prevention. They are also responsible for identification of safety-related systems in the facility that will be the focus of fire protection measures. [ANSI-15.17, 4.2 & 4.3]

11.2.2 Loss Criteria and Fire Protection Features

The loss criteria for decisions on fire protection at the reactor facility consists of preventing any injury to personnel, minimizing radioactive releases to the environment, and preventing injury or exposure to the public [ANSI-15.17, 4.4].

Reactor facility personnel, particularly licensed operators, will be instructed to continually observe conditions that might represent a risk to fire protection. Appropriate assessment of the risk will be provided by the Reactor Supervisor and will include consultation with the Facility Director when appropriate [ANSI-15.17, 4.5].

Passive fire protection elements effectively protect the reactor core, fuel elements, and storage wells. Inherent design of the reactor bay and reactor tank struc-

ture, construction materials, building layout, and fire barriers will all contribute to fire protection. Instrumentation and control systems and radiation measuring systems are primarily protected by fire detection and alarm information. These systems are important to safety only for the initial shutdown and removal of personnel. Protection of other equipment and the reactor bay boundary is accomplished in part by building design, but primarily by detection and alarm systems [ANSI-15.17, 4.6].

11.2.3 Facility Fire Protection Control

The Reactor Supervisor and the Reactor Safety and Utilization Committee will consider the impact of major facility modifications and experiment programs on facility fire protection. The Reactor Supervisor will recommend fire protection requirements and provide for inspection and and test of fire protection components [ANSI-15.17, 4.7(a) & (b)].

Activities such as cutting, welding, open-flame work, and continuous operation of equipment will be examined on a case-by-case basis by the Reactor Supervisor to control such activities [ANSI-15.17, 4.7(d)].

Laboratory staff will be instructed in fire response actions and notification of response personnel. A program to familiarize response personnel with laboratory equipment material hazards and physical layout is an element of the emergency plan and will address fire protection needs as well [ANSI-15.17, 4.7(f)].

11.3 FIRE SAFETY ASSURANCE

Area inspections in the reactor facility will be conducted routinely (e.g., once a month) by the Reactor Supervisor. These inspections will consist of visual reviews of facility areas to detect the existence of potential fire situations [ANSI-15.17, 6.1(1)].

Evaluations of the fire protection program will be conducted annually by the Reactor Supervisor and the Reactor Safety and Utilization Committee based on the area inspection results, tests, or incidents occurring during the evaluation period. Recommendations and corrective action, as necessary, will be factored into the overall fire protection program [ANSI-15.17, 6.1(2)].

REFERENCES

1. "Fire Protection Program Criteria for Research Reactors," ANSI/ANS-15.17-1981.

12. TRAINING AND CERTIFICATION OF OPERATORS

This section describes the program applied to qualification and requalification of personnel that are to be certified as operators by the NRC. This program is based on guidance given in ANSI/ANS-15.4-1988, "Selection and Training of Personnel for Research Reactors".

12.1 TRAINING SUBJECTS

Training subject matter for a senior operator will include the following:

a. Principles of Reactor Facility Operation – Example topics include thermodynamics, heat transfer, fluid flow, basic reactor theory, and radiation protection.

b. Facility Design and Operating Characteristics – Example topics include safety systems, design features, and experiment and test facilities.

c. Instrumentation and Control – Example topics include nuclear instruments, process instruments, control systems, radiological instruments, and experiment and test facility instrumentation and control.

d. Procedures and Technical Specifications – Example topics include normal, abnormal, and emergency procedures, and radiological control and administrative controls.

e. Radioactive Materials Handling – Example topics include special nuclear material and radioactive materials handling, disposal, and safe practices.

f. Regulations – Example topics include facility management controls, rules, applicable regulations, and license conditions [ANSI-15.4,5.3].

Training subject matter for an operator will include items (a) through (d) and other categories and topics which are applicable to the facility and to the requirements of the job [ANSI-15.4,5.4].

The training program for both the senior operator and the operator will take into account the previous experience and training, and level of responsibility of the candidate [ANSI-15.4,5.3 & 5.4].

12.2 ON-THE JOB TRAINING

Each operator or senior operator will be required to perform ten reactor startups or other significant reactivity manipulations of the reactor during the term prior to a new license or renewal license request. Experience for a new license will include sufficient additional operating experience to provide the trainee with a proficient skill and knowledge of the reactor operation for the type of license to be requested. The experience requirement for license renewal of a senior operator will allow directly supervised activities to substitute for direct performance [ANSI-15.4,6.1(c)].

An annual review by each operator of abnormal and emergency procedures will be required. Changes in design, procedures, and licenses or technical specifications will also be reviewed by each operator in a timely manner [ANSI-15.4,6.3].

12.3 EVALUATION AND RETRAINING

Knowledge of the operator or senior operator will be evaluated by an annual examination over the material of that year's training program. Competency of the operator or senior operator will be evaluated by annual observations of the Reactor Supervisor and/or the Facility Director. Oral questions to evaluate both knowledge and competency will be utilized to supplement the evaluation [ANSI-15.4,6.2(5)].

A written examination will be administered to all operators or trainees covering the subjects of the training program for that year. Each subject will be graded on a 100 point basis with an average of 80% as the acceptance criteria. An overall score of less than 60% on any of the subjects will require an immediate evaluation of continued license duties by the Reactor Supervisor and/or the Facility Director. Proficiency by retraining will be demonstrated within 4 months or license duties will be suspended until proficiency is demonstrated. A score between 60% and 80% will require retraining as necessary in the subject area and demonstration of acceptable knowledge by oral or written exams prior to the candidate being recertified. The person who writes, grades, and administers the exam will be a senior operator who will be appointed for a non-consecutive one year term. This person will not be required to take the exam during that year [ANSI-15.4,6.2].

The Reactor Supervisor will periodically evaluate the performance and competency of each licensed operator. The evaluation will include assessment of the individuals review of design, procedures and license changes, a review of abnormal and emergency procedures, manipulation of reactor controls, awareness of laboratory conditions, and log or checklist entries. This evaluation will be per-

formed at least annually or as required by operator inactivity of a period greater than four months. Inactivity is considered absence from all activities of reactor operation [ANSI-15.4,6.2 & 6.5].

12.4 RECORDS

The qualifications of licensed operators and senior operators will be appropriately documented. The documentation will include:

a. Education, experience, employment history, and medical/physical evaluation.

b. Training programs completed.

c. Records of initial qualifying examinations and most recent written requalification examinations, consisting of the candidate's answers and examiner's evaluation.

d. Records of oral and operational demonstration examinations.

e. Records of initial certification and most recent recertification, with dates and approval signatures [ANSI-15.4,9.1].

Records retention of the qualification, training, retraining, examinations, and evaluations of each licensed individual will be maintained in accordance with the technical specifications [ANSI- 15.4,9.2).

REFERENCES

1. "Selection and Training of Personnel for Research Reactors", [ANSI/ANS-15.4-1988].

13. STARTUP PROGRAM

13.0 INTRODUCTION

Startup and testing of the Arkansas Tech TRIGA facility shall be performed by personnel of Arkansas Tech University with consultation of the reactor manufacturer, GA Technologies. Forty-eight TRIGA reactors are now in operation throughout the world and of these thirty-one are pulsing. More than twenty reactors, eleven in the U.S., have power levels of one megawatt or more.

Training of university personnel associated with startup activities at the new facility is expected to consist of the training and licensing of at least two Senior operators by GA Technologies. One or more of the certified operators shall have a bachelors or advanced degree in a field of engineering.

The startup program is to consist of five phases beginning with the storage of nuclear fuel on site and ending with the reporting of observed reactor parameters and acceptance of core operation. At each phase written procedures, check lists or other documents shall be developed for activities or measurements that will have significant importance to safety or operation. Documentation shall include information required by the various programs to be implemented at the facility such as operator qualifications, radiological protection, fire protection and quality assurance, operating procedures, and other requirements of license authorizations. The startup program is to be divided into the following phases:

a. Storage of fuel and acquisition of components,
b. Tests of systems before core loading,
c. Fuel loading and core criticality,
d. Tests subsequent to core criticality, and
e. Acceptance of core operation.

13.1 STORAGE OF FUEL AND ACQUISITION OF COMPONENTS

Provisions for the storage of fuel and components for the reactor facility at the completion of the facility construction shall require the limited implementation

of administrative controls. Criticality specifications for fuel storage and transfer will be written. A license authorization for the possession and storage of special nuclear materials will be obtained and materials relocated to the facility. Storage of non-radioactive components, storage of other reactor components and instrumentation, and assembly of facility systems will be performed in the initial startup phase.

13.2 TESTS OF SYSTEMS BEFORE CORE LOADING

Facility systems, auxiliary systems, and reactor system or physical parameters shall be tested for the appropriate operating conditions prior to fuel transfer into the reactor core. Systems shall be tested according to designated specifications, when applicable, and acceptable operation shall be established before core loading proceeds. Facility systems to be tested will include security, fire, communication and ventilation systems. Auxiliary systems to be tested will include radiation monitoring, pool coolant, alarm, and interlock systems. Reactor systems to be tested will include the instrument and control system (described in section 4) and verification of physical specifications for assembly and operation of reactor components. Some systems or components that do not meet specifications and are not required for operation may be deferred for acceptance to a later startup program phase. Fuel may be loaded into the reactor pool storage racks after all initial tests have been completed.

13.3 CORE LOAD FOR INITIAL CRITICALITY

Continuous operation of coolant system, insertion of the neutron source, and movement of fuel into the core will begin the core load startup program phase. Certain verification of instrumentation and control system functions will be completed before initialization of an approach to critical experiment by standard reciprocal source multiplication factor measurements. Core loading shall be done under direct supervision of a senior reactor operator. An inside to out, circular loading of the core shall be followed. At least two independent instrument channels will be used to obtain data. Integral rod worth values shall be estimated from the core loading procedures prior to criticality. Configuration of the minimum critical core and inventory of the fuel loading will be documented for future reference.

13.4 TESTS SUBSEQUENT TO CORE CRITICALITY

This phase will consist of determining major core parameters. Rod calibration curves shall be determined by positive period measurements before reactor operation at power levels affected by the power coefficient. Any adjustments needed in the core excess reactivity will be made during this phase. Next an inter-

mediate and full thermal power calibration shall be made as well as an evaluation of the fuel temperatures as measured by an instrumented fuel element. The operation of the cooling system will be verified at power. A step reactivity insertion shall be made to obtain peak power, fuel temperature, and energy release of pulse operation. Final core parameters, configuration, loading, rod worths, excess reactivity, power calibration, and pulse data will be documented for future reference. Radiation levels during operation shall be measured and documented. Any variation of core parameters significantly different than predicted by calculations or experience shall be satisfactorily explained during this startup program phase.

13.5 ACCEPTANCE FOR OPERATION

The final startup program phase shall consist of the resolution of all deviations from specifications. Deviations should be resolved as specified for quality assurance or other methods determined to be acceptable. Three months after completion of requisite initial startup and power-escalation testing of the reactor, or nine months after initial criticality, a written report shall be submitted to licensing authorities. The report shall include a summary of the following:

a. Description of measured values of operating conditions or characteristics obtained and comparison of these values with design predictions or specifications.
b. Description of major corrective actions taken to obtain satisfactory operation.
c. Re-evaluation of safety analysis where measured values indicate substantial variance from those values used in the Safety Analysis Report.

Results of the startup program shall become a supplement, as Startup Report, to this chapter of the Safety Analysis Report, and will represent the nominal TRIGA reactor core for ATUTR.

13.6 STARTUP REPORT

14. DECOMMISSIONING REPORT

14.0 INTRODUCTION

In accordance with 10CFR50.33(k) and 10CFR50.75, Arkansas Tech University (ATU) has prepared this decommissioning report containing a cost estimate for decommissioning the reactor facility, a description of the method used to provide funds for decommissioning, and a description of the means of adjusting the cost estimate and associated funding level periodically over the life of the facility.

14.1 DECOMMISSIONING COST ESTIMATE

The ATU reactor facility is a Triga Mark I design. It will operate at a maximum steady state of 250 kW (thermal) and can pulse to 300 MW (thermal). Construction is scheduled to begin in 1990.

Based on information from recent decommissioning activities associated with Triga Mark I reactors, the cost in 1989 dollars is estimated to be $300,000 for decommissioning a Triga Mark I reactor equivalent to the ATU reactor design. This estimate is based on removal and disposal of contaminated materials and returning the remaining portions of the facility to unrestricted use and access. The cost of removing and disposal of the fuel is not included in this estimate since the Department of Energy has accepted responsibility for that portion of the decommission cost.

14.2 FUNDING METHOD

The ATU reactor facility will be a state government owned and operated complex. Financial responsibility for the facility rests with the government of the State of Arkansas. Therefore, as provided for in 10CFR50.75 (e)(2)(iv), the funding for decommissioning will be obtained when necessary through authorizations from the state government.

14.3 COST ESTIMATE ADJUSTMENTS

Since the owners of research reactors maintain good communication with each other through the National Organization of Test, Research and Training Reactors (TRTR) and the Triga Users Group, ATU reactor facility personnel will continue to collect decommissioning cost data from other research reactor owners via these users groups. Furthermore, ATU plans to utilize the experiences from recent decommissioning efforts to establish design features that will accommodate easier decommissioning for the ATU reactor. These design considerations, in combination with industry experience gained from decommissioning activities in the future at other research reactors, should allow ATU to minimize the actual cost of decommissioning at the end of the facility's life.

14.4 RECORDS

ATU will maintain records of information important to the safe and effective decommissioning of the facility. These records will be retained for the lifetime of the facility as part of the administrative records required by the technical specifications. These records will include documentation of spills or other unusual occurrences involving the spread of contamination (as part of the annual report), as-built drawings, and modifications of structures and equipment in restricted areas where contamination may occur, and the decommissioning funding plan.