ELECTRIC POWER RESEARCH INSTITUTE

Alloy 600 Mitigation Methods and Status of NDE Development

Carl Latiolais
Senior Program Manager Performance Demonstration

PDI/NRC Meeting

June 2010

Outline

- Background
- Mechanical Stress Improvement Process (MSIP)
- Weld Overlay
- Inlay Technology
- Onlay Technology
- Others

© 2010 Electric Power Research Institute, Inc. All rights reserved.

Background

- The discovery of Primary Water Stress Corrosion Cracking (PWSCC) has caused the industry to develop solutions for mitigation of Alloy 600 locations
- Each method has specific NDE requirements
- NRC has mandated that the mitigated components be inspectable after application

© 2010 Electric Power Research Institute, Inc. All rights reserved.

Mechanical Stress Improvement Process (MSIP)

- Process
  - OD deformation applied mechanically (clamp)
    - Puts inside surface (inner 30%) in compression
- Prerequisites
  - Must have access to outside surface to place equipment
  - Must ensure that no flaws greater than 30% through wall are present
    - Deeper flaws that have grown out of compressed zone may not be mitigated
- Inspection Issues
  - Susceptible material must be examined prior to and after application
    - Configuration may not allow for examination
    - If adequate coverage cannot be obtained technical basis to MSIP process is challenged

© 2010 Electric Power Research Institute, Inc. All rights reserved.

Weld Overlay

- Process
  - Application of resistant material to the outside surface of the component
    - Puts inside surface in compression
    - Resistant material provides added assurance that no flaws will leak
    - Design ensures structural integrity of component even if small flaws are present
      - Removes driving stresses
      - Design assumes flaws are present up to 100% of wall thickness
    - If applied properly, can improve the examination access for inspection

© 2010 Electric Power Research Institute, Inc. All rights reserved.

Weld Overlay (Cont.)

- Prerequisites
  - Must have access to outside surface
  - Must be able to mount welding equipment
  - Configuration must allow for application of the weld material
- Inspection Issues
  - Overlay must be designed to allow for inspection
    - 100% coverage is required.
    - Overlays over complex configurations require complex scan plans to be developed in order to ensure coverage with qualified techniques
      - Multiple search units may be needed

© 2010 Electric Power Research Institute, Inc. All rights reserved.

Weld Overlay (Cont.)

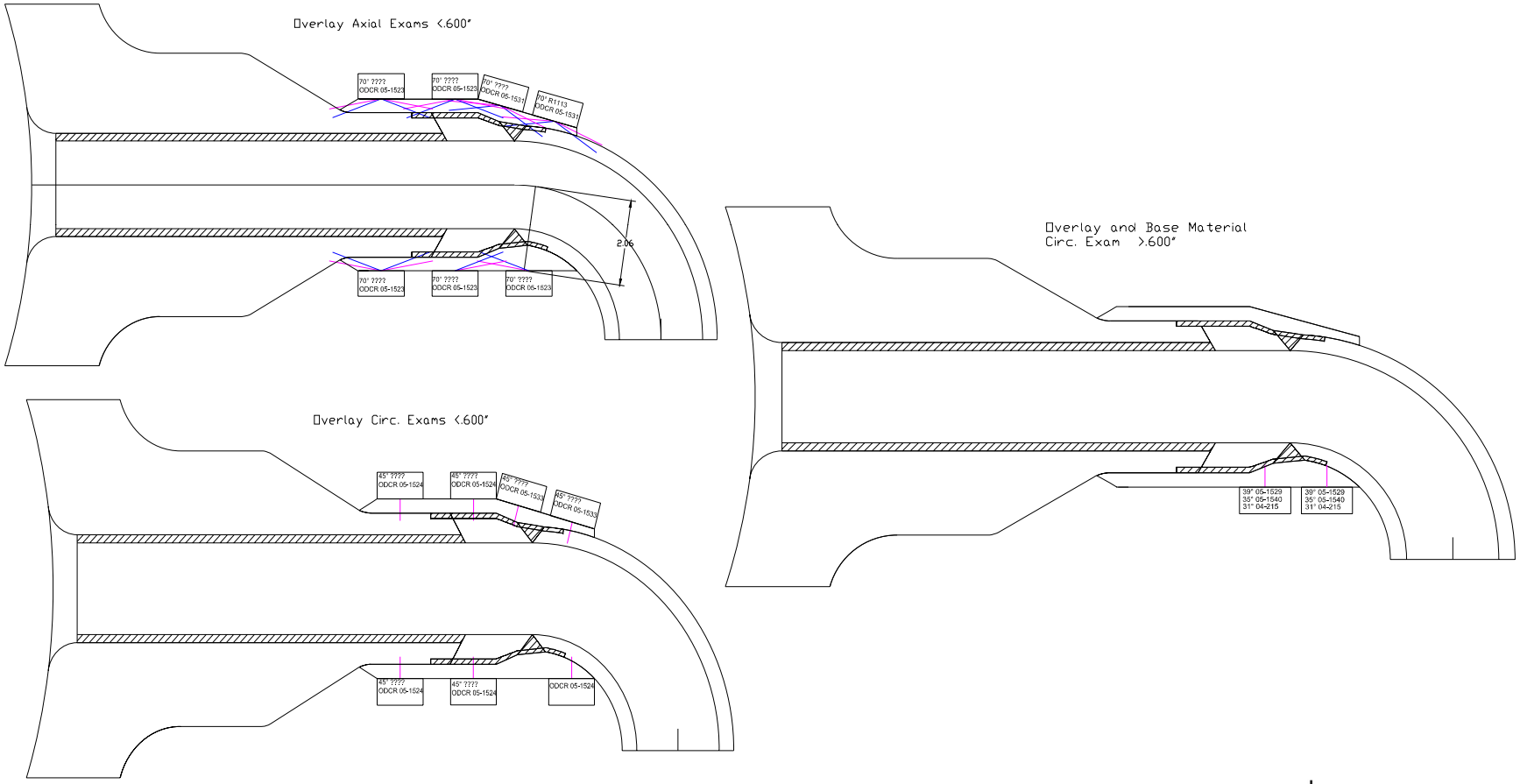

© 2010 Electric Power Research Institute, Inc. All rights reserved.

ELECTRIC POWER RESEARCH INSTITUTE

Weld Overlay (Cont.)

- New Applications
  - Optimized design overlays
    - Thinner
    - Applied quicker
    - Design assumes smaller flaw (75% Through-wall)
  - Target application area
    - Large diameter thick components
  - Requires examination of a larger portion of the original base material under the overlay
    - Upper 50% verses upper 25%

© 2010 Electric Power Research Institute, Inc. All rights reserved.

Weld Overlay (Cont.)

- Optimized design overlay applications have been approved by NRC
  - Requires use of relief request
  - Technical basis covered in MRP-169 Addenda 1
  - NRC has reviewed welding and NDE processes
  - First application performed Spring of 2010
  - Current procedures and personnel qualifications were expanded to cover this application
  - Current PDI sample set is being expanded
    - Three year project approved that started in 2009
    - Additional samples are being fabricated
      - Optimized overlays covering similar and dissimilar welds
      - Thicker overlays that will be used to extend current thickness ranges
      - Three configurations being added in 2010

© 2010 Electric Power Research Institute, Inc. All rights reserved.

Inlay Technology

- Process
  - Machine away a small portion of the susceptible material at the inside surface
  - Apply protective 52M layer
  - Machine smooth after application
  - Resistant material will isolate the susceptible material from RCS Coolant
  - Compliance with Design Basis

© 2010 Electric Power Research Institute, Inc. All rights reserved.

Inlay Technology (Cont.)

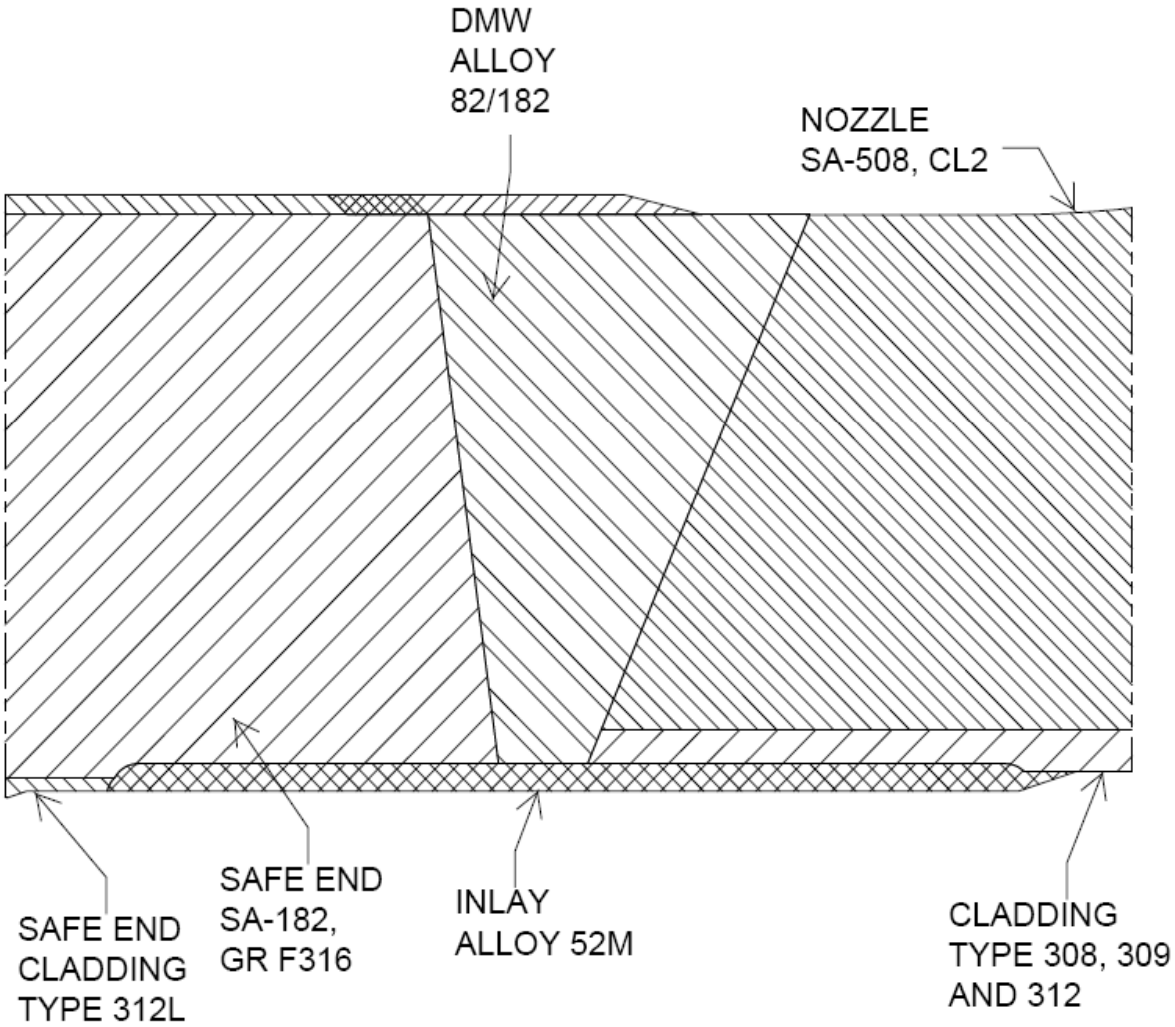

© 2010 Electric Power Research Institute, Inc. All rights reserved.

ELECTRIC POWER RESEARCH INSTITUTE

Inlay Technology (Cont.)

- Prerequisites
  - Inspection of 100% of susceptible material must be performed prior to application
  - Unacceptable flaws must be repaired or evaluated prior to application
  - Relief request may be needed if temper bead welding is required
    - Depends on thickness of clad near ferritic material

© 2010 Electric Power Research Institute, Inc. All rights reserved.

Inlay Technology (Cont.)

- Inspection Issues
  - PDI sample set did not address corrosion resistant cladding
    - Supplement 10 excludes it from qualification
  - Industry has performed evaluations that clearly show that existing procedures applied from inside surface are capable of examining inlaid components reliably
    - Mock-ups fabricated
    - Practical trials performed
    - See Reports
      - *"Ultrasonic Equivalency Testing of Weld Inlaid Components – 1016543"*
      - *"Ultrasonic Equivalency Testing of Weld Inlaid and Onlaid Components -1016655"*

© 2010 Electric Power Research Institute, Inc. All rights reserved.

Inlay Technology (Cont.)

- Newly inlaid components must meet the acceptance standards of CC-770
  - Acceptance standards are stringent
- If unacceptable flaws are detected prior to inlay and repair is needed additional NDE may be required
  - Radiography (RT) if possible
  - UT in lieu of RT
    - Will require relief request

© 2010 Electric Power Research Institute, Inc. All rights reserved.

Inlay Technology (Cont.)

- Future Work
  - Support acceptance of process from USNRC via relief requests
  - No planned applications at this point

© 2010 Electric Power Research Institute, Inc. All rights reserved.

Onlay Technology

- Process
  - Apply non-structural layer of weld material on the inside surface, over the existing weld, cladding and safe-end material
    - Isolates susceptible material from reactor environment
    - Ensure inspectable surface
  - Meet existing ASME rules for design & installation of cladding and be compliance with draft Code Case N-770

© 2010 Electric Power Research Institute, Inc. All rights reserved.

Onlay Technology

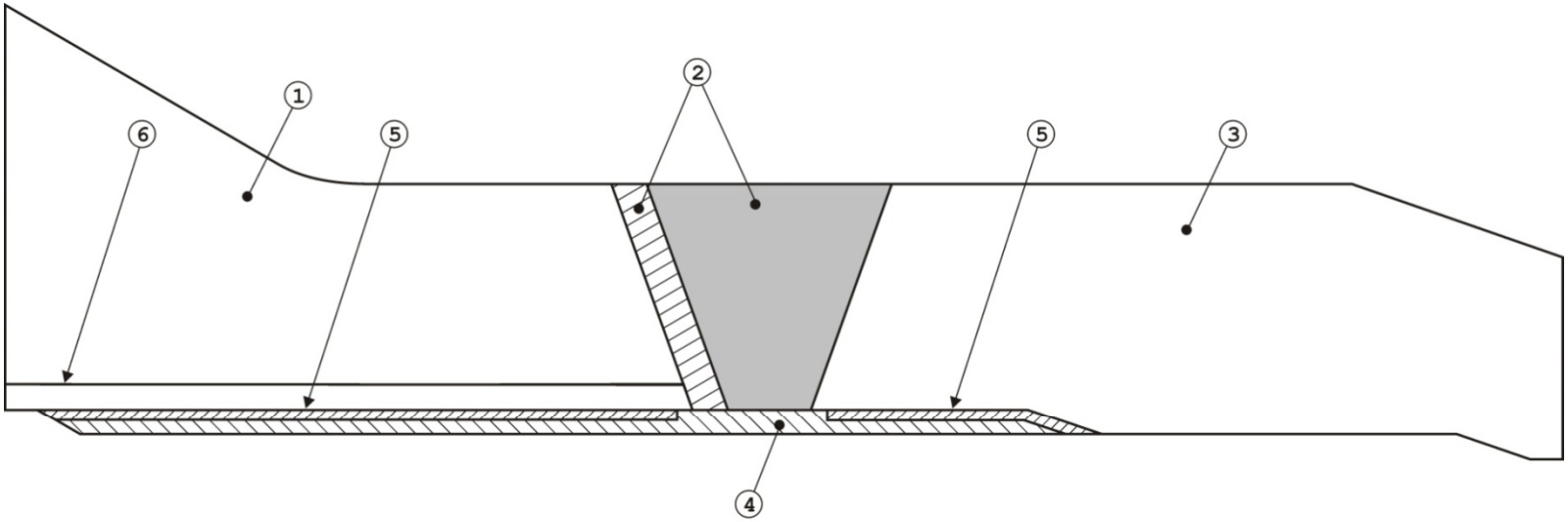

PARTS LIST		MATERIALS
1.	NOZZLE FORGING	A-508 CL.2
2.	WELD/BUTTER	ALLOY 82/182
3.	SAFE-END	SA-336 GR.F8M
4.	WELD ONLAY	ALLOY 52M
5.	BUFFER LAYER	ER308L
6.	CLADDING	ER308L

© 2010 Electric Power Research Institute, Inc. All rights reserved.

ELECTRIC POWER RESEARCH INSTITUTE

Onlay Technology (Cont.)

- Prerequisites and inspection issues are the same as with inlay applications
- Future Applications
  - Onlays applied in fall of 2008 and fall of 2009
  - Work underway using laser welding technology

© 2010 Electric Power Research Institute, Inc. All rights reserved.

Excavate and Weld Repair (EWR) Concept

- Excavate a portion of original butt weld thickness and replace with PWSCC resistant, Alloy 52M weld metal
- Alternative to weld overlays for:
  - Large bore welds(>24 in. NPS) to reduce welding time
  - Locations with significant physical interferences
  - May also be applied to smaller diameter components
- Similar to FSWOL (i.e. all design loads carried exclusively by newly applied, PWSCC resistant material) for fully circumferential 360° repair but without the residual stress benefit
- Can be used as:
  - Preemptive mitigation
  - Permanent repair
  - Limited Duration repair (partial arc repair)

© 2010 Electric Power Research Institute, Inc. All rights reserved.

Illustration of Basic EWR Concept

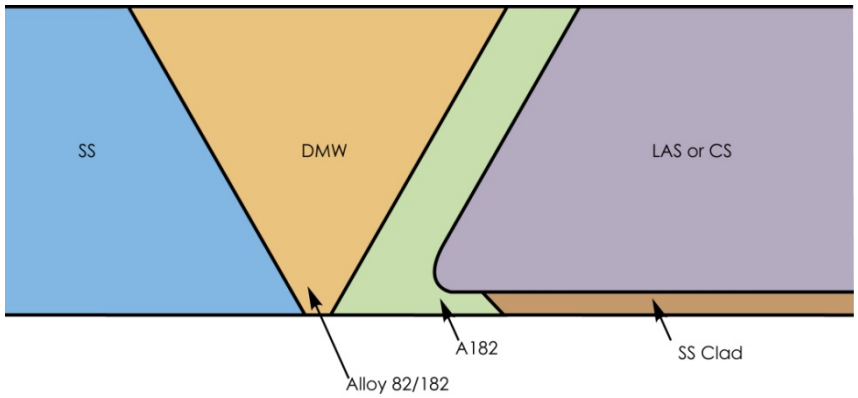

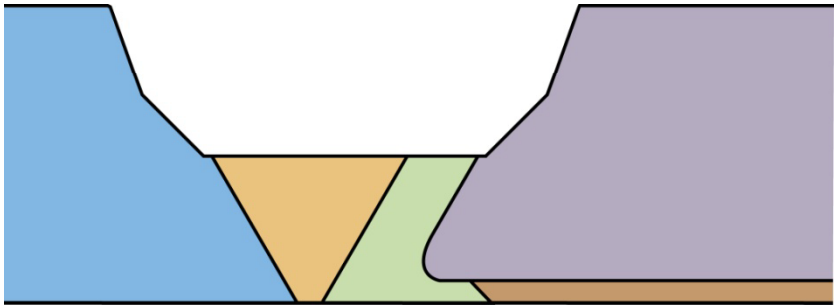

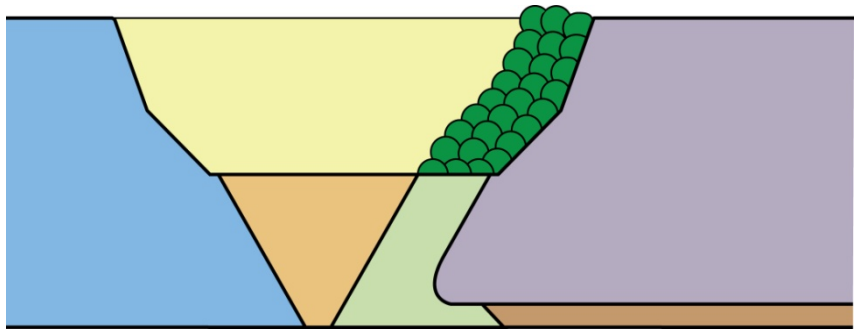

© 2010 Electric Power Research Institute, Inc. All rights reserved.

ELECTRIC POWER RESEARCH INSTITUTE

EWR - Design Requirements for Excavation

- Excavation depth depends on applied loadings (Service Levels A, B, C, D)
  - 50% of original wall thickness will be sufficient to meet Code limits for most locations
  - Minimum excavation depth must also allow for fatigue crack and PWSCC growth over the life of the repair assuming that an ID surface connected flaw exists
- Excavation and repair length may be:
  - 360° of circumference (permanent repair or mitigation)
  - partial arc (<u>limited duration</u> repair)

© 2010 Electric Power Research Institute, Inc. All rights reserved.

EWR- Examination for Acceptance of Weld Repair

- Per NB-4450, if repair excavation is greater than 3/8” or 10% of component thickness, radiographic examination (RT) is required
- Alternative UT exam will be utilized under provisions of Code Case N-659
  - demonstration needs to be performed on mock-up coupon built in accordance with Code Case N-659 (containing fabrication defects)
  - approach will be consistent with recent PDI qualifications approved by the NRC
  - personnel performing examinations will be qualified by demonstration on test coupon(s) developed by EPRI
  - Relief Request is required for this alternative

© 2010 Electric Power Research Institute, Inc. All rights reserved.

EWR- Future Examinations

- For pre-service examination no specific changes to qualified procedures is anticipated
  - Normal examination of mitigated weld

© 2010 Electric Power Research Institute, Inc. All rights reserved.

Summary

- Several mitigation processes are being developed
- NDE must be considered in the application of any of these processes
- Continued work is underway to gain approval of these processes, but the capability to do reliable NDE is key consideration in every application proposed

© 2010 Electric Power Research Institute, Inc. All rights reserved.