between the Reactor and Control Buildings. An arrangement of this fashion naturally groups piping, HVAC ducts and cable trays together in divisional arrangements and does not require routing of services of one division across space allotted to another division.

9.5.1.1.2 Divisional Separation

As stated above, there are three complete divisions of safety-related cooling systems. Any one division is capable of safe or emergency shutdown of the plant so that a division may be out for maintenance, a single random failure occurs and the remaining functional division would still be able to provide safe plant shutdown.

In general, systems are grouped together by safety division so that, with the exceptions of the primary containment, the control room and the remote shutdown room (when operating from the remote shutdown panels), there is only one division of safe shutdown equipment in a fire area. Complete burnout of any fire area without recovery will not prevent safe shutdown of the plant; therefore, complete burnout of a fire area is acceptable.

The separation exception in the primary containment is made because it is not practical to divide the primary containment into three fire areas. The design is deemed acceptable because:

(1) Primary containment is inerted during plant operation; therefore, a fire is not possible.

(2) Sprinkler coverage is provided by the Containment Spray System.

(3) Only check valves and ADS/SRV valves are required to operate within containment to provide safe shutdown. A fire could not prevent the operation of a check valve nor would it prevent a safety valve from being lifted on its spring by pressure. The high-pressure pumps are capable of providing sufficient head to lift the SRV valves against their spring settings so that a fire could not prevent injection of water to and relief of steam from the reactor vessel.

(4) In addition, maximum separation is maintained between the divisional equipment within primary containment.

All divisions are present in the control room and this cannot be avoided. It is the purpose of the remote shutdown panel to provide redundant control of the safe shutdown function from outside of the control room. The controls on the remote shutdown panel are hard wired to the field devices and power supplies. The signals between the remote shutdown panel and the control room are multiplexed over fiber

optic cables so that there are no power supply interactions between the control room and the remote shutdown panel.

During normal plant operation the remote shutdown room is divided into two rooms by a closed sliding fire door. A fire in one divisional section will not affect the other divisional section. When the operator puts the remote shutdown panel into operation, the sliding door is manually slid open so that there is one remote shutdown room with two divisional sections of panels.

There are areas where there is equipment from more than one safety division in a fire area. Each of these cases is examined on an individual basis to determine that the encroachment is required and that failure in the worst conceivable fashion is acceptable. This analysis is documented in Subsection 9A.5.5.

Electrical Divisions 1, 2 and 3 supplies, Reactor Building cooling water pumps and heat exchangers, emergency chillers and emergency HVAC systems are located in the Control Building. Since these systems are required for safe shutdown of the plant if the function of the control room is lost, they are separated from the control room complex and its HVAC System by rated fire barriers. A fire resulting in the loss of function of the control room will not affect the operation of the remote shutdown or remote shutdown support systems.

With the existing separation and the tolerance to spurious signals (Subsection 9.5.1.1.7) that the plant systems have, evaluation of the impact of fire on safe shutdown is greatly simplified. The specific location of a fire within a fire area, fire growth rate and intensity is unimportant as long as the integrated intensity of the fire remains within the capability of the three-hour fire barrier system.

9.5.1.1.3 Fire Containment System

The Fire Containment System is the structural system and appurtenances that work together to confine the direct effects of a fire to the fire area in which the fire originates. The Fire Containment System is required to contain a fire with a maximum severity as defined by the time-temperature curve defined in ASTM E119 for a fire with a duration of three hours. For this condition, the temperature in the room at the end of three hours would be 1052°C. In addition, all structural walls, floors, ceilings, penetration seals, and hatches in the Reactor Building which are three hour fire barriers are required to withstand a 5 psid pressure differential. The Fire Containment System is comprised of the following elements:

(1) Concrete fire barrier floors, ceilings and walls which must be at least six inches thick (Reference 9.5-2, Figure 7-8T, NFPA Handbook) if made from carbonate and siliceous aggregates. Other aggregates and thicknesses are acceptable if the type of construction has been tested and bears a UL (or equal) label for a three-hour rating.

(3) Recover plant HVAC Systems as soon as possible to limit heat rises

(4) Provide additional core, containment, and vital equipment makeup and cooling services, as necessary

(5) Establish orderly plant safe shutdown conditions

9.5.13.21 Quality Assurance Requirements for CTG

Quality assurance standards and practices shall be developed to assure continued operational reliability of the CTG as an AAC power source for SBO events, in accordance with Regulatory Guide 1.155 and 10CFR50.63.

9.5.14 Alternate Feedwater Injection System

9.5.14.1 System Description

An alternate feedwater injection (AFI) system, capable of injecting into the Reactor Pressure Vessel (RPV) at operating pressure (≥800 g.p.m. at a pressure approximately at the lift setpoint of the first group of safety/relief valves) and located outside of the Reactor Building (R/B) is available. The system is capable of providing sufficient core cooling in the unlikely event that all normal and emergency core cooling systems are unavailable. It is comparable to the High Pressure Core Flooder (HPCF) system capacity and discharge pressure (at rated pressure). The AFI Pump House which contains this system as well as the water source for AFI are located a minimum of 300 feet from the nearest outside wall of each of the Reactor Building, Control Building and Turbine Building. The interaction of the non-seismic AFI Pump House with Seismic Category I structures, systems and components will be evaluated in accordance with the existing process described in Section 3.7.2.8. This will ensure that a failure of the non-seismic Pump House will not render any Category I structure inoperable. A schematic of the AFI system is shown in Figure 9.5-6.

The system takes suction from an existing water source which is located near the AFI Pump House. There is a minimum of 300,000 gallons of useable water at the AFI Pump suction line while the AFI is in standby. The water supply source is required to be a fresh water source, filtered if necessary to remove silt and debris. If the primary source is a volume limited supply such as a tank, a minimum of 300,000 gallons must be reserved for the AFI system, and the source must be capable of being refilled. The AFI system discharges through three normally closed motor-operated valves (MOV). The system discharge piping is routed underground or is otherwise protected from physical impact. The injection is provided through the non-safety-related portion of the CUW tie-in lines to the feedwater system. The tie-in is in the R/B portion of the Steam Tunnel. A single AFI system may be used with the injection configured to support more than one unit of a multiple unit site. The system and power supplies are non-safety grade. The AFI Pump House and water source are separated by barriers from each of the Reactor Building, Turbine Building, and Control Building as described in Tier 1, Table 2.11.24.

The power supply for the pump and motor-operated valves is a non-safety-related power supply and independent of the emergency power supplies and meets the

requirements of non-Class 1E power as described in Chapter 8. The power supply is physically separated from the emergency power supplies such that a simultaneous loss due to beyond design basis events is unlikely. In order to satisfy this separation requirement, the power supply is located at least 300 feet from the nearest outside wall of each of the Reactor Building, Control Building, and Turbine Building (Reference NEI 06-12 "B.5.b Phase 2 & 3 Submittal Guideline", Rev. 2, December 2006, which was endorsed by the NRC by letter dated December 22, 2006). The power supply and associated power supply auxiliary support equipment such as switchgear and cables are separated by barriers from each of the Reactor Building, Turbine Building and Control Building as described in Tier 1, Table 2.11.24.

The AFI pump is a self-cooled pump that relies on the pumped fluid for cooling. At rated flow, pump cooling is provided by the fluid flowing to the RPV. As shown in Figure 9.5-6, a minimum flow bypass line is provided to return water to the pump suction source to prevent pump damage due to overheating when the injection valves on the main discharge lines are closed. Cooling of the AFI pump is consistent with the Pump Manufacturer's recommendations.

Lubrication of the AFI pump is performed in accordance with the Pump Manufacturer's recommendations and is included as part of the applicant's maintenance procedures.

The system can be operated from the AFI Pump House. This will ensure that the injection can be initiated within 30 minutes after the loss of normal makeup systems to provide sufficient core cooling. In addition, the operator is provided with the capability to control flow from the AFI Pump House by throttling a motor- operated valve located in the Pump House. The procedures for operation of the AFI system include provisions to throttle the flow at the start of the AFI pump, which minimizes the effects of water hammer**.** The AFI Pump House environment is compatible with the AFI equipment requirements as specified by the equipment manufacturer.

9.5.14.2 Safety Evaluation

This system does not degrade safety for normal operation and provides enhanced safety during and after beyond design basis events. The ability to maintain core cooling is improved by the addition of a separate and diverse means of providing cooling water to the core when all normal and emergency cooling systems are unavailable. The piping and components that interface with the CUW system are the same quality as that system up to and including the second check valve.

In the event that fluid from the CUW system should leak past the two check valves and the first MOV, a leakoff line is included in the AFI design as shown in Figure 9.5-6 which directs any leakage back to the Reactor Building low conductivity sump. Consequently, any leakage of radioactive fluid into the AFI system is ultimately contained within the Reactor Building. The existing leak detection that exists for the Reactor Building low conductivity sump can then be used to monitor this leakage.Flooding from AFI pipe breaks during AFI operation, as well as from the AFI water source, is bounded by existing analyses in the DCD. The impact on risk assessment for internal flooding is minimal because the AFI system is only required to operate for beyond design basis events after all safety systems are already assumed to have failed.

The dynamic effects from an AFI system pipe break are not required to be postulated. The effects on plant safety systems are bounded by the Main Steam or Feedwater High Energy Line Breaks. Additionally, the safety systems are already assumed to have failed at the time the AFI System is required.

9.5.14.3 Testing and Inspection Requirements

Preoperational testing requirements for the AFI system are prepared as described in Subsection 14.2.12.

The AFI system components are periodically tested consistent with the Manufacturer's recommendations as part of the COL Applicant's maintenance program.

9.5.14.4 Instrumentation Requirements

The following indications are provided in the AFI Pump House:

- RPV water level
- RPV pressure
- Wetwell WR pressure
- Suppression pool water level

In addition, the following AFI-related instrumentation is provided in the AFI Pump House:

- AFI pump flow and discharge pressure
- Level indication of any dedicated water storage tanks

The AFI Transmitter Rack for RPV level, RPV pressure, and wetwell pressure is located in Room 314 of Floor B1F of the Reactor Building. The AFI Transmitter Rack for Suppression Pool Level is located in Room 111 of Floor B3F of the Reactor Building. The location of the AFI instrument lines is shown in Table 9.5-6. All AFI cabling is located outside of the damage footprint for beyond design basis events. The instrument lines, instrument rack and cables in the Reactor Building are protected from fire and shock. The AFI Instrument Rack is shock-mounted. Fire protection of instrument lines is achieved by protecting the instrument penetration room. Fire resistant cabling with at least 3 hour fire rating is used. The instrument lines to be used for monitoring the alternate feedwater injection are branched from the existing line and are connected to new level and pressure transmitters. The safety classification of the instrumentation and associated piping for the AFI system is the same as that for the existing instrumentation to which it is connected as identified in Table 3.2-1. The additional transmitters for RPV water level, RPV pressure and wetwell WR pressure as well as the suppression pool water level transmitter are installed in a room which is protected from fire effects. The room protection is achieved by additional fire doors or modification of fire doors to water-tight doors. In the unlikely event of an instrument line break, the break flow is limited by the small size of the instrument line orifice and is accounted for in the specified capacity for the AFI pump.

9.5.15 Reference

9.5-1 Stello, Victor, Jr., "Design Requirements Related To The Evolutionary Advanced Light Water Reactors (ALWRS)", Policy Issue, SECY-89-013, The Commissioners, United States Nuclear Regulatory Commission, January 19, 1989.

9.5-2 Cote, Arthur E., "NFPA Fire Protection Handbook", National Fire Protection Association, Sixteenth Edition.

9.5-3 "Design of Smoke Control Systems for Buildings", American Society of Heating, Refrigerating, and Air Conditioning Engineers, Inc., September 1983.

9.5-4 "Recommended Practice for Smoke Control Systems", NFPA 92A, National Fire Protection Association, 1988.

9.5-5 Life Safety Code, NFPA 101, National Fire Protection Association.

9.5-6 "Reliability of Emergency Diesel Generators at U.S. Nuclear Power Plants", Electric Power Research Institute, NSAC-108, September 1986.

9.5-7 Loss of All Alternating Current Power, 10CFR50.63.

9.5-8 Regulatory Guide 1.155—Station Blackout.

9.5-9 "Guidelines and Technical Bases for NUMARC Initiatives Addressing Station Blackout at Light Water Reactors", NUMARC-87-00.

Table 9.5-6 AFI Instrument Line Locations

Name	Division	Penetration Location	Description	Room No.
RPV Pressure	1	X-142A RB G2F	Branch line from Original to AFI Inst. Panel at B1F	518
RPV Level	1	X-142A RB G2F X-144A RB G1F	Branch lines from Original to AFI Inst. Panel at B1F	518 411
S/P Water Level	1	X-322E RB B2F X-323E RB B3F	Branch lines from Original to AFI Inst. Panel at B3F	212 112
S/P Pressure	1	X-321A RB B2F	Branch line from Original to AFI Inst. Panel at B3F	230

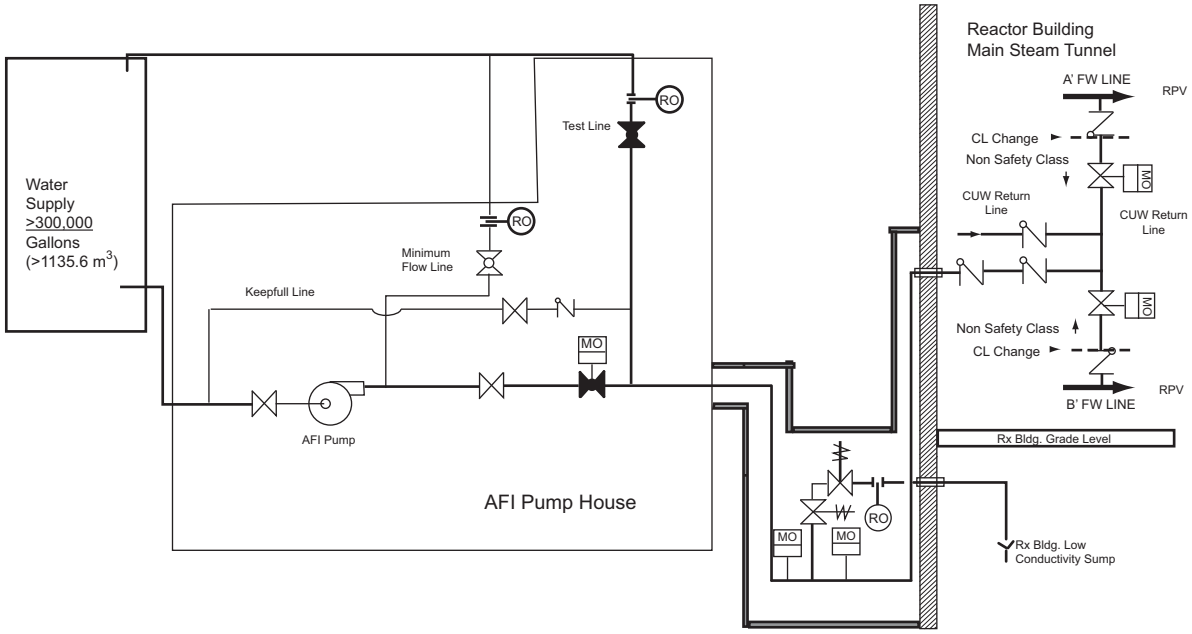

Figure 9.5-6 Alternate Feedwater Injection System Schematic