76. Given the following:

- The plant is operating at 100% RTP.
- All control systems are in their normal alignments, with the exception of PC-444J, PZR PRESSURE which is in MANUAL.
- PC-444J is in MANUAL due to erratic control when in AUTO.
- The output of PC-444J drifts down to 20-25%.

AOP-019, MALFUNCTION OF RCS PRESSURE CONTROL.
AOP-025, RTGB INSTRUMENT FAILURE.

Which ONE (1) of the following describes the effect on RCS pressure and the procedure used to mitigate the transient?

A. RCS Pressure increases. Enter AOP-019.

B. RCS Pressure increases. Enter AOP-025.

C. RCS Pressure decreases. Enter AOP-019.

D. RCS Pressure decreases. Enter AOP-025.

000008 G2.4.11 001/PZR VAPOR SPACE ACCI/1/1/4.0/4.2/SRO/HIGH/43.5/RNP AUDIT - 2007/AOP-019-002

Given the following:

- The plant is operating at 100% RTP.
- All control systems are in their normal alignments, with the exception of PC-444J, PZR PRESSURE which is in MANUAL.
- PC-444J is in MANUAL due to erratic control when in AUTO.
- The output of PC-444J drifts down to 20-25%.

AOP-019, MALFUNCTION OF RCS PRESSURE CONTROL.

AOP-025, RTGB INSTRUMENT FAILURE.

Which ONE (1) of the following describes the effect on RCS pressure and the procedure used to mitigate the transient?

A. RCS Pressure increases. Enter AOP-019.

B. RCS Pressure increases. Enter AOP-025.

C. RCS Pressure decreases. Enter AOP-019.

D. RCS Pressure decreases. Enter AOP-025.

The correct answer is A.

A: Correct - As PC-444J output is reduced, it is calling for pressure to be raised. Pressure will rise as heaters turn ON and spray valves CLOSE. Malfunction is on the controller (NOT the instrument), AOP-019 should be used.

B: Incorrect - Transient direction is correct, but mitigating procedure is incorrect. (AOP-025 is for instrument failures)

C: Incorrect - Pressure transient direction is incorrect, procedure is correct.

D: Incorrect - BOTH transient direction and procedure are incorrect.

Exam Question Number: 76

Reference: AOP-019, Pages 3-4; SD-059, Page 17, Figures 6 and 7, AOP-025, Page 3.

KA Statement: Knowledge of abnormal condition procedures.

History: Modified from RNP bank - changed stem to make A correct

SRO - Required to assess conditions and select appropriate procedure.

| | | | |
|---|---|---|---|
| KA Name: | PZR VAPOR SPACE ACCI | Tier/Group: | 1/1 |
| Importance Rating: | 4.0/4.2 | RO/SRO Level: | SRO |
| Cognitive Level: | HIGH | 10CFR55.43 link: | 43.5 |
| Source: | RNP AUDIT - 2007 | Learning Objective: | AOP-019-002 |

Purpose and Entry Conditions

(Page 1 of 1)

1. PURPOSE

This procedure provides instructions in the event RCS pressure is higher OR lower than required for current plant conditions.

This procedure is applicable in Modes 1, 2, and 3.

2. ENTRY CONDITIONS

This procedure may be entered when RCS pressure deviates from the desired control band due to a fault in pressure control components. (AOP-025 covers Instrument Failure)

- END -

NOT AN SRO ONLY QUESTION.
IT APPEARS THAT THIS PROCEDURE WOULD BE ENTERED, BASED ON PLANT CONDITIONS, WHICH REQUIRES IMEDIATE ACTIONS TO BE PERFORMED.
IMMEDIATE ACTIONS TAKEN BY THE RO

| STEP | INSTRUCTIONS | RESPONSE NOT OBTAINED |
|---|---|---|
| | NOTE<br><br>Steps 1 and 2 are Immediate Action steps. | |
| * 1. | Determine If PZR PORVs Should Be Closed: | |
| | a. Check PZR pressure - LESS THAN 2335 PSIG | a. Verify OPEN at least one PZR PORV and associated PORV BLOCK Valve:<br><br>• PCV-455C AND RC-536<br><br>OR<br><br>• PCV-456 AND RC-535<br><br>WHEN RCS pressure is less than 2335 psig, THEN perform Step 1.b.<br><br>Go To Step 2. |
| | b. Verify Both PZR PORVs - CLOSED | b. IF any PZR PORV can NOT be closed, THEN close its PORV BLOCK Valve. |
| 2. | Control The PZR SPRAY VALVES AND PZR Heaters To Restore RCS Pressure To The Desired Control Band | |
| * 3. | Check PZR Pressure - UNDER OPERATOR CONTROL | IF PZR Pressure approaches a Reactor Trip Setpoint, THEN trip the Reactor and Go To Path-1.<br><br>• Low PZR Pressure - 1844 psig<br><br>• High PZR Pressure - 2376 psig<br><br>• OTΔT - Variable (TR-412) |

5.1.1 PZR Pressure Control (PZR-Figure 6 & PZR-Figure 7)

Pressure control is accomplished via pressure controller PC-444A which is a Proportional + Integral controller; the Derivative section has been defeated. This means the controller develops an output signal that is determined by how far pressure is from setpoint (Proportional) and how long the pressure has been away from setpoint (Integral).

PT-444 sends a pressure signal to PC-444A which is compared to the pressure setpoint developed by PC-444J which is controlled on the RTGB. PC-444J is a Hagan Manual-Auto station with a 10 turn pot capable of developing a control setpoint over the entire pressure range of PT-444. PT-444 ranges from 2500 to 1700 psig therefore PC-444J is capable of 800 psi range of control. For Example if the operator desires the controller to maintain normal pressure of 2235 psig the pot setting would be determined as follows:

$$\frac{2235 - 1700}{800} * 10 = 6.69 \text{ on the 10 turn pot.}$$

The output of PC-444J (setpoint signal) is sent to PC-444A to be compared to the actual pressure. PC-444A has a gain of 2 which effectively cuts in half the range of control of PZR pressure to 400 psi around the setpoint determined by PC-444J. The controller output is then directed to the proportional heaters, spray valves via controllers PC-444C and PC-444D, backup heaters, PZR PORV 456 and PI-458 and is displayed on the meter on PC-444J

The components operated by PC-444A operate at a fixed deviation from setpoint or controller output as observed on the meter on PC-444J, no matter what setpoint is dialed in on PC-444J. For example the backup heaters are set to turn on 25 psi below set pressure. If set pressure is 2235 psig, their setpoint would be 2210 psig and the control output when they came on would be as follows:

$$\frac{2210-2035}{400} = .4375 \text{ or } 43.75\% \text{ demand}$$

If the pot on PC-444J were then set at 6.25 this would give a set pressure of 2200 psig. When the output of PC-444A was at 43.75% the backup heaters would come on, pressure would be 2175 psig; 25 psi below set pressure. The setpoints normally listed for heater, spray, and PCV-456 setpoints are based on a set pressure of 2235 psig where PC-444J is normally set.

As stated before, PC-444A is a Proportional + Integral controller, therefore controller output may not correspond exactly to the pressure monitored by the operator. If pressure is away from setpoint for an extended period of time the controller output may saturate while increasing its output trying to return pressure to setpoint.



*INFORMATION USE ONLY*

# PRESSURE CONTROLLER

PZR-FIGURE-6

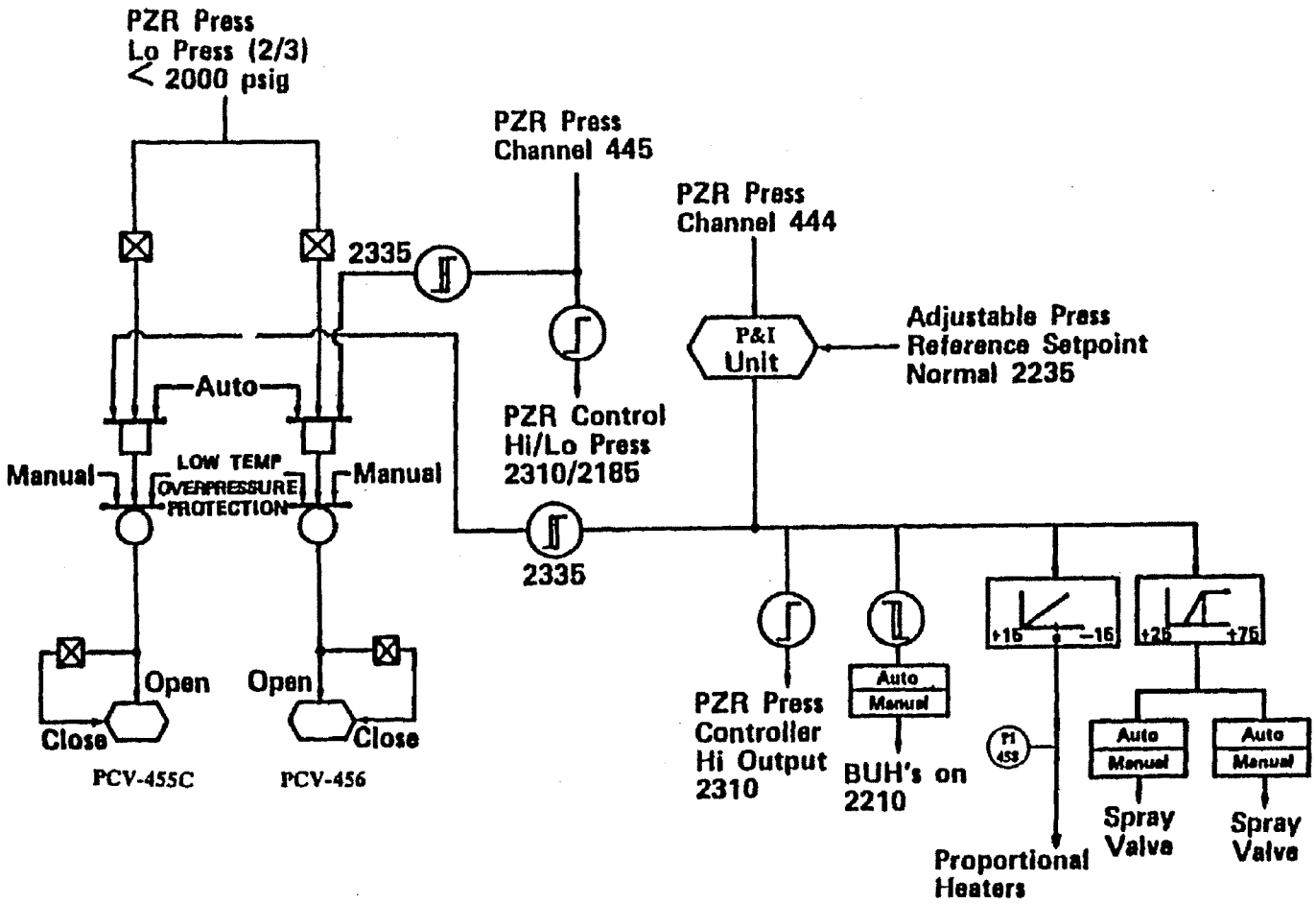


pzrf08

*INFORMATION USE ONLY*

# PC-444A CONTROLLER

PZR-FIGURE-7

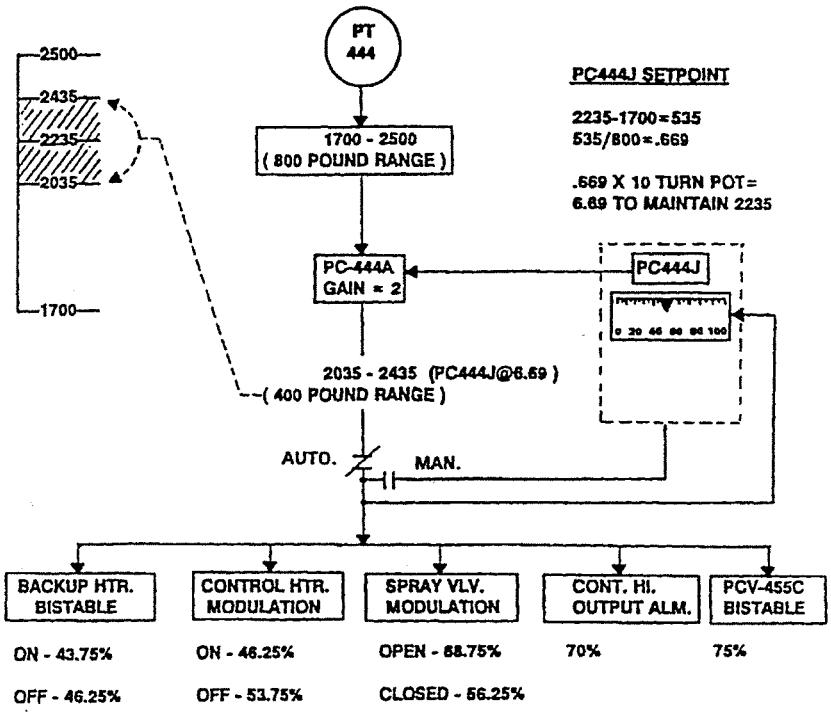


DETERMINATION OF EXPECTED CONTROLLER OUTPUT

1. B/U HEATERS - ON = 2210

2210-2035 = 175

175/400 = .4375 OR 43.75%

2. SPRAY VALVE OPENING = 2260

2260-2035 = 225

225/400 = .5625 OR 56.25%

3. PCV-455C OPENS = 2335

2335-2035 = 300

300/400 = .75 OR 75%

pzrf09

*INFORMATION USE ONLY*

## Purpose & Entry Conditions

(Page 1 of 1)

1. PURPOSE

This procedure provides instructions for failure of process variable transmitters which provide input to RTGB controllers.

IF an applicable transmitter fails while the controller is operating in manual OR is being fed from an alternate channel, THEN entry to this procedure is NOT required.

This procedure is applicable in Modes 1, 2, 3, and 4.

2. ENTRY CONDITIONS

Failure of any process variable transmitter which affects automatic operation of RTGB controllers with the following exceptions:

- FT-605, RHR Flow
- LT-115, VCT Level
- LT-112, VCT Level
- PR NIS (NI-41, 42, 43, & 44)

- END -

3 034

Given the following:

PC-444J

- The plant is at 100% power.
- All control systems are in their normal alignments, with the exception of the Pressurizer Pressure Master Controller, which is in MANUAL.
- The Pressurizer Pressure Master Controller output drifts to ~~82%~~. 41%

Which ONE (1) of the following describes the effect on RCS pressure and the correct procedure actions to mitigate the transient?

A. RCS pressure increases. Enter AOP-019, Malfunction of RCS Pressure Control. Verify closed PZR PORV PCV-455C and control heaters and spray manually.

B. RCS pressure increases. Enter AOP-025, RTGB Instrument Failures. Verify closed PZR PORV PCV-455C and control heaters and spray manually. Place bistables in trip within 6 hours.

C. RCS pressure decreases. Enter AOP-019, Malfunction of RCS Pressure Control. Verify closed PZR PORV PCV-455C and control heaters and spray manually.

D. RCS pressure decreases. Enter AOP-025, RTGB Instrument Failures. Verify closed PZR PORV PCV-455C and control heaters and spray manually. Place bistables in trip within 6 hours.

#76

77. Given the following:

- The plant is operating at 100% RTP.
- VCT makeup is in progress.
- BOTH VCT level channels indicate 19 inches.
- The following indications are noted:
    - BA Transfer Pump "A" is running.
    - PW Pump "A" is running.
    - FCV-113A, BA FLOW, OPEN.
    - FCV-113B, BLENDED MU TO CHG SUCT, CLOSED.
    - FCV-114A, PRIMARY WTR FLOW DILUTE MODE, OPEN.
    - FCV-114B, BLENDED MU TO VCT, CLOSED.

- 45 seconds later:
    - APP-003-D5, BA FLOW DEV alarm has illuminated.
    - APP-003-E5, MAKEUP WATER DEV alarm has illuminated.

Which ONE (1) of the following has caused the alarms and what actions, if any, are required to mitigate the event?

A. The Charging Pump suction has swapped to the RWST. No actions required. Ensure LCO 3.5.4, RWST OPERABILITY is met.

B. FCV-113B has failed CLOSED. Implement AOP-003, MALFUNCTION OF REACTOR MAKEUP CONTROL.

C. The Charging Pump suction has swapped to the RWST. Implement AOP-003, MALFUNCTION OF REACTOR MAKEUP CONTROL.

D. FCV-113B has failed CLOSED. Implement AOP-017, LOSS OF INSTRUMENT AIR.

000022 A2.03 001/LOSS OF RX COOL MAKE/1/1/3.1/3.6/SRO/HIGH/43.5/NEW - 2008/AOP-003-002

Given the following:

- The plant is operating at 100% RTP.
- VCT makeup is in progress.
- BOTH VCT level channels indicate 19 inches.
- The following indications are noted:
    - BA Transfer Pump "A" is running.
    - PW Pump "A" is running.
    - FCV-113A, BA FLOW, OPEN.
    - FCV-113B, BLENDED MU TO CHG SUCT, CLOSED.
    - FCV-114A, PRIMARY WTR FLOW DILUTE MODE, OPEN.
    - FCV-114B, BLENDED MU TO VCT, CLOSED.

- 45 seconds later:
    - APP-003-D5, BA FLOW DEV alarm has illuminated.
    - APP-003-E5, MAKEUP WATER DEV alarm has illuminated.

Which ONE (1) of the following has caused the alarms and what actions, if any, are required to mitigate the event?

A. The Charging Pump suction has swapped to the RWST. No actions required. Ensure LCO 3.5.4, RWST OPERABILITY is met.

B. FCV-113B has failed CLOSED. Implement AOP-003, MALFUNCTION OF REACTOR MAKEUP CONTROL.

C. The Charging Pump suction has swapped to the RWST. Implement AOP-003, MALFUNCTION OF REACTOR MAKEUP CONTROL.

D. FCV-113B has failed CLOSED. Implement AOP-017, LOSS OF INSTRUMENT AIR.

The correct answer is B.

A: Incorrect - Swapover setpoint is 12.5 inches. NO swapover should have occurred. Action is appropriate for swapover on VCT low level.

B: Correct - FCV-113B is the ONLY valve listed that is out of position. Since FCV-113B is NOT operating as expected, AOP-003 is the correct procedure to use. VCT is NOT at the swapover setpoint.

C: Incorrect - Swapover setpoint is 12.5 inches. NO swapover should have occurred. Action is appropriate for swapover on VCT low level.

D: Incorrect - FCV-113B is the ONLY valve listed that is out of position. Since FCV-113B is NOT operating as expected, AOP-003 is the correct procedure to use. AOP-017 is the appropriate procedure if air header pressure was low, but FCV-114A fails CLOSED on a loss of instrument air.

Exam Question Number: 77

Reference: APP-003-D5 and E5; AOP-003, Pages 3 and 10, AOP-017, Page 3, ITS 3.5.4.

KA Statement: Ability to determine and interpret the following as they apply to the Loss of Reactor Coolant Makeup: Failures of flow control valve or controller.

History: New - Written for HLC-08 NRC Exam.

SRO - Requires analysis of plant conditions and selection of mitigating procedure.

| | | | |
|---|---|---|---|
| KA Name: | LOSS OF RX COOL MAKE | Tier/Group: | 1/1 |
| Importance Rating: | 3.1/3.6 | RO/SRO Level: | SRO |
| Cognitive Level: | HIGH | 10CFR55.43 link: | 43.5 |
| Source: | NEW - 2008 | Learning Objective: | AOP-003-002 |

ALARM

BA FLOW DEV *** WILL REFLASH ***

AUTOMATIC ACTIONS

1. FCV-113B, BLENDED MU TO CHG SUCT, CLOSES

CAUSE

1. Improper blended makeup concentration
2. Improper Boric Acid Pump operation
3. Improper control of FCV-113A or positioner failure (B.A. flow)
4. Excessive ΔP across Boric Acid Filter

OBSERVATIONS

1. Boric Acid Flow (FR-113)
2. Position of FCV-113A
3. RCS Temperature (Tavg)
4. Reactor Power

ACTIONS

1. **IF** alarm is due to intentional operator action, **THEN** no other actions are necessary.
2. **IF** required, **THEN** verify Boric Acid makeup stopped.
3. **IF** the alarm is due to a Malfunction of Makeup Control, **THEN** Refer to AOP-003.
4. **IF** the alarm is due to low boron concentration, **THEN** take manual control of RCS makeup, as required.

DEVICE/SETPOINTS

1. FC-113 /±0.2 gpm (Alarm will activate 45 seconds after Boric Acid flow deviation of 0.2 gpm from the controller setpoint.)

POSSIBLE PLANT EFFECTS

1. Inadvertent RCS dilution
2. Tavg-Tref Deviation alarm

REFERENCES

1. AOP-003, Malfunction of Reactor Makeup Control
2. CWD B-190628, Sheet 481, Cable X

ALARM

MAKEUP WATER DEV

AUTOMATIC ACTIONS

1. DILUTE MODE: FCV-114B, BLENDED MU TO VCT, closes
2. ALT DILUTE MODE: FCV-113B, BLENDED MU TO CHG SUCT, **AND** FCV-114B, BLENDED MU TO VCT, close
3. AUTO MODE: FCV-113B, BLENDED MU TO CHG SUCT, closes

CAUSE

1. Improper control of FCV-114A or positioner failure (P.W. flow)
2. Inadequate flow from Primary Water Makeup Pumps
3. Measured PW flow is not within 5 gpm of set PW flow (45 sec. TD).

OBSERVATIONS

1. Primary Water Flow (FR-114)
2. Position of FCV-114A for Primary Water Flow
3. Primary Water Makeup Pumps operating

ACTIONS

1. **IF** alarm is due to intentional operator action, **THEN** no other actions are necessary.
2. **IF** the alarm is due to a Malfunction of Makeup Control, **THEN** Refer to AOP-003.

DEVICE/SETPOINTS

1. FC-114 /±5 gpm

POSSIBLE PLANT EFFECTS

1. Overboration of RCS during blended makeup

REFERENCES

1. AOP-003, Malfunction of Reactor Makeup Control
2. CWD B-190628, Sheet 481, Cable Z

## Purpose and Entry Conditions

(Page 1 of 1)

1. PURPOSE

   The purpose of this procedure is to provide instructions in the event of a malfunction of the Reactor Makeup Control System.

2. ENTRY CONDITIONS

   This procedure is entered upon VCT level OR makeup anomalies.

- END -

| STEP | INSTRUCTIONS | RESPONSE NOT OBTAINED |
|---|---|---|
| 19. | (CONTINUED) | |
| | e. At the RTGB, Verify FCV-113B, BLENDED MU TO CHG SUCT - OPEN | e. <u>IF</u> FCV-113B has failed, <u>THEN</u> perform the following:<br><br>1) Place FCV-114B, BLENDED MU TO VCT, Control Switch to OPEN<br><br>2) Restart Automatic Makeup As Follows:<br><br>a) Momentarily place the RCS MAKEUP SYSTEM Switch to STOP<br><br>b) Momentarily place the RCS MAKEUP SYSTEM Switch to START<br><br>c) Verify Automatic Makeup is initiated<br><br>d) Return to procedure and step in effect |
| | f. Verify LCV-115A, VCT/HLDP TK DIV Valve - CLOSED (Positioned To The VCT) | |
| | g. Go To Step 21 | |

## Purpose and Entry Conditions

(Page 1 of 1)

1. PURPOSE

   This procedure provides instructions in the event a loss of Instrument Air occurs.

2. ENTRY CONDITIONS

   a. Instrument Air Header pressure less than 85 psig.

   b. Instrument Air System pipe break.

- END -

## 3.5 EMERGENCY CORE COOLING SYSTEMS (ECCS)

### 3.5.4 Refueling Water Storage Tank (RWST)

LCO 3.5.4 The RWST shall be OPERABLE.

APPLICABILITY: MODES 1, 2, 3, and 4.

ACTIONS

| CONDITION | REQUIRED ACTION | | COMPLETION TIME |
|---|---|---|---|
| A. RWST boron concentration not within limits.<br><br>OR<br><br>RWST borated water temperature not within limits. | A.1 | Restore RWST to OPERABLE status. | 8 hours |
| B. RWST inoperable for reasons other than Condition A. | B.1 | Restore RWST to OPERABLE status. | 1 hour |
| C. Required Action and associated Completion Time not met. | C.1 | Be in MODE 3. | 6 hours |
| | AND | | |
| | C.2 | Be in MODE 5. | 36 hours |

78. During Mid-Loop operations, the following indications and conditions are noted:

- RHR Pump "A" is operating, FCV-605, RHR HEAT EXCHANGER BYPASS is in AUTO.
- FI-605 indicates 3600 GPM and is oscillating ± 100 GPM.
- RHR Pump discharge pressure is oscillating ± 30 PSIG.
- RCS standpipes indicate -73 inches (RTGB) and -74 inches (LOCAL).

What conditions are causing the oscillations and the actions necessary to stabilize the RHR system parameters?

The RHR Pump...

A. is in runout due to excessive flow. Reduce flow IAW GP-008, DRAINING THE REACTOR COOLANT SYSTEM.

B. is cavitating due to limited suction and vortexing. Stop RHR Pump "A" IAW AOP-020, LOSS OF RESIDUAL HEAT REMOVAL (SHUTDOWN COOLING).

C. is in runout due to excessive flow. Stop RHR Pump "A" IAW GP-008.

D. is cavitating due to limited suction and vortexing. Reduce flow IAW AOP-020.

000025 A2.07 001/LOSS OF RHR/1/1/3.4/3.7/SRO/HIGH/43.5/NEW - 2008/AOP-020-002

During Mid-Loop operations, the following indications and conditions are noted:

- RHR Pump "A" is operating, FCV-605, RHR HEAT EXCHANGER BYPASS is in AUTO.
- FI-605 indicates 3600 GPM and is oscillating ± 100 GPM.
- RHR Pump discharge pressure is oscillating ± 30 PSIG.
- RCS standpipes indicate -73 inches (RTGB) and -74 inches (LOCAL).

What conditions are causing the oscillations and the actions necessary to stabilize the RHR system parameters?

The RHR Pump...

A. is in runout due to excessive flow. Reduce flow IAW GP-008, DRAINING THE REACTOR COOLANT SYSTEM.

B. is cavitating due to limited suction and vortexing. Stop RHR Pump "A" IAW AOP-020, LOSS OF RESIDUAL HEAT REMOVAL (SHUTDOWN COOLING).

C. is in runout due to excessive flow. Stop RHR Pump "A" IAW GP-008.

D. is cavitating due to limited suction and vortexing. Reduce flow IAW AOP-020.

The correct answer is B.

A: Incorrect - Flow is NOT excessive, pump runout does NOT occur until greater than the design flowrate of 3750 GPM, therefore reducing flow is NOT necessary.

B: Correct - Standpipe levels indicate -73 inches, which is below the point where pump cavitation is likely and is an entry condition for AOP-020. The first two steps of AOP-020 direct stopping the RHR pumps if below -72 inches, with flow instability or pump cavitation.

C: Incorrect - Flow is at the upper range , but NOT excessive or at runout conditions.

D: Incorrect - Standpipe levels indicate -73, which is below the point where pump cavitation is likely and is an entry condition for AOP-020. The first two steps of AOP-020 direct stopping the RHR pumps if below -72 inches, with flow instability or pump cavitation, not reducing flow. AOP-020 does NOT direct a reduction of flow.

Exam Question Number: 78

Reference: SD-003, RHR, Pages 22 and 23, Figure 1; AOP-020, Pages 3-4.

KA Statement: Ability to determine and interpret the following as they apply to the Loss of Residual Heat Removal System: Pump Cavitation.

History: New - Written for HLC-08 NRC exam.

SRO - Requires analysis of plant conditions and selection of mitigating procedure.

| | | | |
|---|---|---|---|
| KA Name: | LOSS OF RHR | Tier/Group: | 1/1 |
| Importance Rating: | 3.4/3.7 | RO/SRO Level: | SRO |
| Cognitive Level: | HIGH | 10CFR55.43 link: | 43.5 |
| Source: | NEW - 2008 | Learning Objective: | AOP-020-002 |

limits. The RHR System can be used to fast fill the Refueling Canal.

For fast fill of the refueling cavity, the RHR System is lined up for the RHR Pumps to take suction from the RWST through Valves SI-862A and B. The reactor vessel head is removed and used for shielding. The Refueling Canal is filled by pumping water from the RWST into the system. The slow fill method uses the SI pumps through the RCS hot leg.

In order to drain the Refueling Canal, the system will be lined up to take water from the RCS hot leg through Valves RHR-750 and RHR-751 and pump it back to the RWST through Valves SI-863A and B. When the level in the Refueling Canal is equal to a prescribed value, the remainder of the water in the Refueling Canal will be removed by draining to the Reactor Coolant Drain Tank and/or containment sump.

6.5 Reactor Coolant System/RHR Level Monitoring

During outage conditions when the RCS/RHR level is required to be maintained below the vessel flange, the level is monitored by RCS Loop 2 & 3 standpipes in the containment and LT-403 and LT-404, which indicate level on the RTGB. This monitored level range is from the vessel flange down to the upper core plate (-125"). The level at the center line of the RCS piping is -82 inches of water. If the level is lowered below -72 inches, cavitation of the RHR Pumps is likely to occur. RHR pump discharge pressure is monitored on the RTGB by PI-602A and PI-602B. Recent Westinghouse studies have shown that vortexing could occur above -72 inches.

6.6 Initiation of an S Signal when aligned to the Injection Phase

In the event of a SI signal, the RHR pumps A and B will start and RHR-744 A and B will open. The system will take suction from the RWST and circulate borated RWST water through the recirc. lines until RCS pressure decreases to a point where RHR pump shutoff head can force open the check valves to the RCS cold legs (~130 psig), or until the operator secures the RHR system.

6.7 Precautions and Operational Limitations on RHR

- RCS temperature and pressure shall be less than 350°F and 375 psig before the RHR System is put in service, and the RHR system will be removed from service before RCS pressure and temperature are raised above these values.

- To prevent boiling the CCW liquid contained in an RHR HX, CCW flow should not be isolated to an RHR HX when the temperature of the RHR System is greater than 200°F. (CR 95-00565)



*INFORMATION USE ONLY*

- Neither RHR-750 nor RHR-751 will open unless the following conditions are satisfied:
  - The breakers for SI-862A & B and SI-863 A & B are closed.
  - The control power switches for SI-862A & B and SI-863 A & B are in NORMAL.
  - Valves SI-862A and B are closed.
  - Valves SI-863A and B are closed.
  - RCS pressure is less than 445 psig.

- SI-862A & B, and SI-863A & B are interlocked so they cannot be opened unless the RHR loop pressure is less than 210 psig.

- When the Residual Heat Removal System is providing Core Cooling **AND** seal injection flow is desired to maintain a positive ΔP across the Thermal Barrier of the Reactor Coolant Pumps, letdown flow through HCV-142 and PCV-145 should be maintained to provide makeup to the VCT.

- When RHR-757C or RHR-757D is closed, 3,350 gpm flow, indicated on FI-605, with one RHR pump running or 6,700 gpm flow with two RHR pumps running shall not be exceeded, except as allowed/required by approved test procedures for which flowrates on FI-605 may be as high as 3800 gpm for one pump or 7600 gpm for two pumps.

- When both RHR-757C and RHR-757D are open, 3750 gpm total per running pump as read from FI-605, FI-608A and FI-608B shall not be exceeded, except as allowed/required by approved test procedures for which total flowrates may be as high as 4200 gpm for one pump or 8400 gpm for two pumps.

- When running RHR Pumps with SI-863A and/or SI-863B open, RHR-744A and RHR-744B should be closed to prevent excessive RHR pump runout.

- If CCW is not available to the RHR pump seal coolers, the RHR pumps shall not be operated with pump discharge temperature greater than 135 °F. With CCW available to the RHR pump seal coolers there is no time limit for running a single pump with flow only through the heatup recirculation line. It will be necessary to rotate the RHR pumps to avoid exceeding the 50°F ΔT limit between RHR loops as stated in GP-007.

- RHR pump flowrates of less than 2,800 gpm have been shown to increase pressure and flow fluctuations and should be avoided when plant conditions permit. This does not apply during recirculation operation. (ACR 91-078)



*INFORMATION USE ONLY*

# RHR SYSTEM-CORE COOLING LINEUP

RHR-FIGURE-1

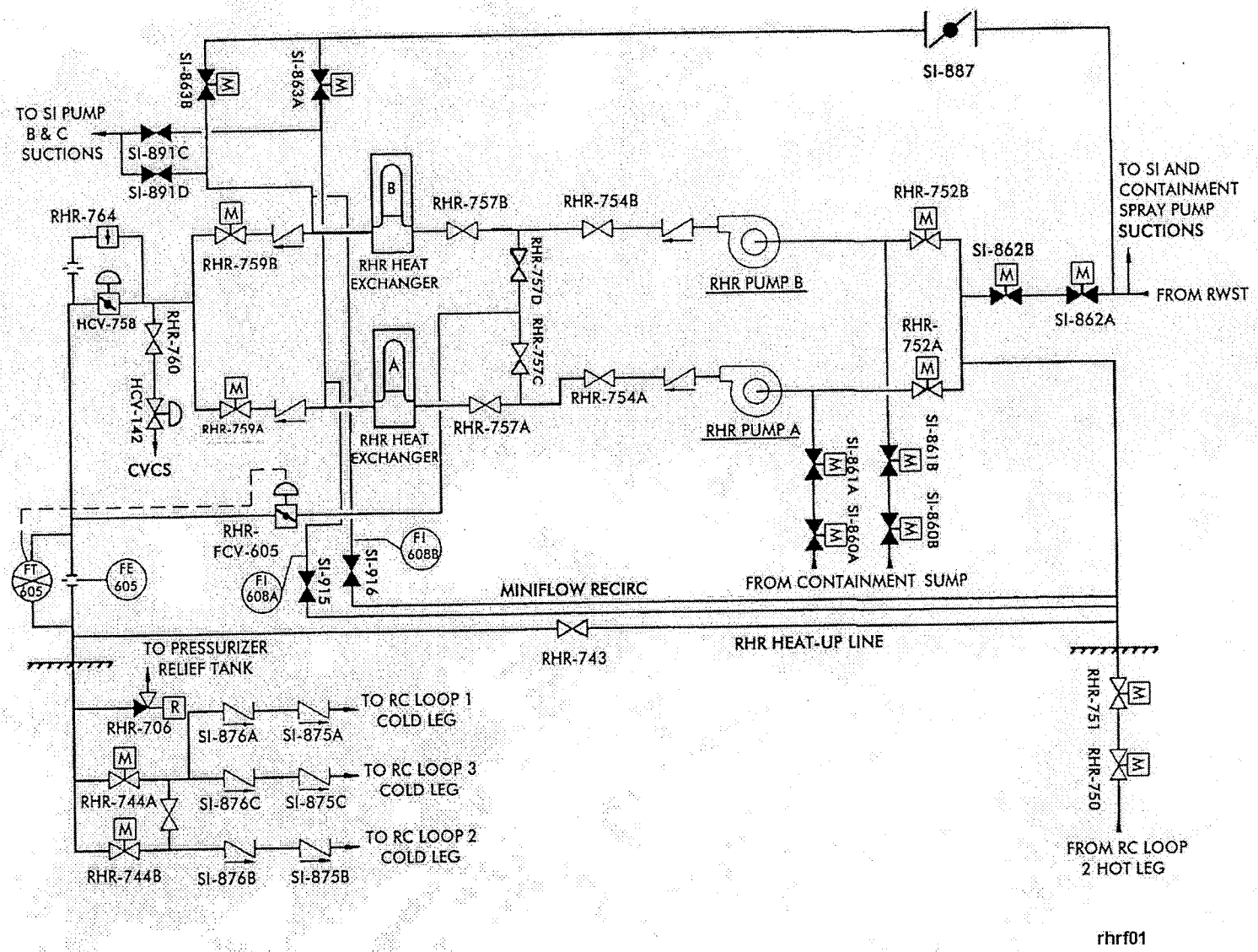


***INFORMATION USE ONLY***

| STEP | INSTRUCTIONS | RESPONSE NOT OBTAINED |
|---|---|---|

1. PURPOSE

This procedure provides the instructions necessary to mitigate the loss of RHR in all conditions for which RHR can be aligned to provide shutdown cooling. This includes loss of RHR cooling for reasons such as RCS leakage, loss of power, loss of Service Water or Component Cooling Water, RHR pump cavitation, and inadequate RHR flow or abnormal reductions in RHR cooling.

This procedure is applicable in Modes 4, 5, and 6 when fuel is in the vessel.

2. ENTRY CONDITIONS

Direct entry from any condition resulting in a loss of RHR pump(s), RHR pump cavitation, abnormal RHR flow or temperature control, or excessive loss of RCS inventory while RHR is aligned for shutdown cooling.

As directed by the following other procedures:

- AOP-005, Radiation Monitoring System, when a low level in the SFP exists due to an RCS leak with the SFP GATE VALVE open.
- AOP-014, Component Cooling Water System Malfunction, resulting in stopping of the RHR Pumps while in CSD.
- AOP-016, Excessive Primary Plant Leakage, if less than 200°F and leakage exceeds Charging Capacity.
- AOP-017, Loss Of Instrument Air, if the loss of Instrument Air has affected core cooling while on RHR.

- END -

| STEP | INSTRUCTIONS | RESPONSE NOT OBTAINED |
|---|---|---|
| * 1. | Check RCS Level - LESS THAN -72 INCHES (69% FULL RANGE RVLIS) | IF RCS Level becomes less than -72 inches (69% FULL RANGE RVLIS), THEN verify BOTH RHR Pumps stopped.<br><br>Go To Step 3. |
| 2. | Verify BOTH RHR Pumps - STOPPED | |
| 3. | Make PA Announcement For Procedure Entry | |

NOTE

FRP-S.1 is NOT applicable for this event unless directed by the CSFSTs.

| | | |
|---|---|---|
| 4. | From The RTGB, Verify Reactor Tripped As Follows:<br><br>• REACTOR TRIP MAIN AND BYP - OPEN<br><br>• Rod Position indication - ZERO<br><br>• Rod Bottom lights - ILLUMINATED | IF the reactor does NOT trip, THEN dispatch an Operator to the Rod Drive MG Set Room to Open REACTOR TRIP BREAKERS A AND B. |
| 5. | Check RCS Level - DECREASING:<br><br>• Pressurizer level<br><br>OR<br><br>• RCS loop standpipe level<br><br>OR<br><br>• RVLIS<br><br>OR<br><br>• Refueling Cavity Watch report | IF either PZR PORV is failed open due to loss of input from PT-500 OR PT-501, THEN place the associated LTOPP Arming Switch to the NORMAL position.<br><br>IF the event does NOT involve a loss of Inventory, THEN Go To Section E, Loss Of RHR Flow Or Temperature Control.<br><br>IF RHR Pumps have been stopped due to loss of Inventory, THEN Go To Step 6. |

79. Given the following:

- The plant is in MODE 3.
- The plant experiences a loss of 480V Bus E-1 and EDG "A" does NOT start.
- CCW Pump “C” breaker has tripped on overload.
- CCW Pump "A" is running.

Which ONE (1) of the following describes the required actions?

A. Enter LCO 3.7.6, COMPONENT COOLING WATER SYSTEM; Place the plant in MODE 5 within 72 hours.

B. Enter LCO 3.0.3; Place the plant in MODE 4 within 37 hours.

C. Enter LCO 3.7.6, COMPONENT COOLING WATER SYSTEM; Restore 1 CCW Train to operable status within 72 hours.

D. Enter LCO 3.0.3; Place the plant in MODE 5 within 37 hours.

000026 G2.2.38 001/LOSS OF CCW/1/1/3.6/4.5/SRO/HIGH/43.1/NEW - 2008/CCW-012

Given the following:

- The plant is in MODE 3.
- The plant experiences a loss of 480V Bus E-1 and EDG "A" does NOT start.
- CCW Pump "C" breaker has tripped on overload.
- CCW Pump "A" is running.

Which ONE (1) of the following describes the required actions?

A. Enter LCO 3.7.6, COMPONENT COOLING WATER SYSTEM; Place the plant in MODE 5 within 72 hours.

B. Enter LCO 3.0.3; Place the plant in MODE 4 within 37 hours.

C. Enter LCO 3.7.6, COMPONENT COOLING WATER SYSTEM; Restore 1 CCW Train to operable status within 72 hours.

D. Enter LCO 3.0.3; Place the plant in MODE 5 within 37 hours.

The correct answer is D.

A: Incorrect - LCO 3.7.6 is correct entry for a single train of CCW INOPERABLE. LCO 3.7.6 Condition A is actually to restore an OPERABLE train of CCW within 72 hours.

B: Incorrect - BOTH trains INOPERABLE therefore LCO 3.0.3 must be entered, but time to get to MODE 4 is actually 13 hours, 37 hours is correct time to get to MODE 5.

C: Incorrect - LCO 3.7.6 is correct entry and action for a single train of CCW INOPERABLE.

D: Correct - CCW Pump "A" is powered from the DS Bus, which is NOT a credited Safeguards power source. Both "B" and "C" Pumps are INOPERABLE and LCO 3.7.6 does NOT contain a condition for BOTH trains INOPERABLE, therefore LCO 3.0.3 must be entered and the plant must be in MODE 5 in 37 hours.

Exam Question Number: 79

Reference: ITS 3.7.6; ITS 3.0.3, ITS 3.7.6 BD.

KA Statement: Knowledge of conditions and limitations in the facility license.

History: New - Written for HLC-08 NRC exam.

SRO - Analysis of current plant conditions and application of generic LCO requirements.

| | | | |
|---|---|---|---|
| KA Name: | LOSS OF CCW | Tier/Group: | 1/1 |
| Importance Rating: | 3.6/4.5 | RO/SRO Level: | SRO |
| Cognitive Level: | HIGH | 10CFR55.43 link: | 43.1 |
| Source: | NEW - 2008 | Learning Objective: | CCW-012 |

## 3.7 PLANT SYSTEMS

### 3.7.6 Component Cooling Water (CCW) System

LCO 3.7.6 Two CCW trains powered from emergency power supplies shall be OPERABLE.

APPLICABILITY: MODES 1, 2, 3, and 4.

ACTIONS

| CONDITION | REQUIRED ACTION | | COMPLETION TIME |
|---|---|---|---|
| A. One required CCW train inoperable. | A.1 | --------NOTE--------<br>Enter applicable Conditions and Required Actions of LCO 3.4.6, "RCS Loops – MODE 4," for residual heat removal loops made inoperable by CCW.<br>----------<br><br>Restore required CCW train to OPERABLE status. | 72 hours |
| B. Required Action and associated Completion Time of Condition A not met. | B.1 | Be in MODE 3. | 6 hours |
| | <u>AND</u> | | |
| | B.2 | Be in MODE 5. | 36 hours |

## 3.0 LIMITING CONDITION FOR OPERATION (LCO) APPLICABILITY

LCO 3.0.1 LCOs shall be met during the MODES or other specified conditions in the Applicability, except as provided in LCO 3.0.2 and 3.0.7.

---

LCO 3.0.2 Upon discovery of a failure to meet an LCO, the Required Actions of the associated Conditions shall be met, except as provided in LCO 3.0.5 and LCO 3.0.6.

If the LCO is met or is no longer applicable prior to expiration of the specified Completion Time(s), completion of the Required Action(s) is not required unless otherwise stated.

---

LCO 3.0.3 When an LCO is not met and the associated ACTIONS are not met, an associated ACTION is not provided, or if directed by the associated ACTIONS, the unit shall be placed in a MODE or other specified condition in which the LCO is not applicable. Action shall be initiated within 1 hour to place the unit, as applicable, in:

a. MODE 3 within 7 hours;

b. MODE 4 within 13 hours; and

c. MODE 5 within 37 hours.

Exceptions to this Specification are stated in the individual Specifications.

Where corrective measures are completed that permit operation in accordance with the LCO or ACTIONS, completion of the actions required by LCO 3.0.3 is not required.

LCO 3.0.3 is only applicable in MODES 1, 2, 3, and 4.

---

LCO 3.0.4 When an LCO is not met, entry into a MODE or other specified condition in the Applicability shall only be made:

(continued)

B 3.7 PLANT SYSTEMS

B 3.7.6 Component Cooling Water (CCW) System

BASES

BACKGROUND

The CCW System provides a heat sink for the removal of process and operating heat from safety related components during a Design Basis Accident (DBA) or transient. During normal operation, the CCW System also provides this function for various nonessential components, as well as the spent fuel storage pool. The CCW System serves as a barrier to the release of radioactive byproducts between potentially radioactive systems and the Service Water System, and thus to the environment.

The CCW System consists of three pumps, two heat exchangers, a supply and return header, a surge tank, and associated piping, valves, and instrumentation. The "B" and "C" CCW pumps are each powered by a separate safety related bus. The "A" CCW pump is powered by the nonsafety related dedicated shutdown bus. The surge tank accommodates changes in water volume in the system and ensures that sufficient net positive suction head is available for the CCW pumps.

All CCW pumps automatically start on low pump discharge header pressure. All CCW pumps in operation upon initiation of a Safety Injection (SI) signal will continue to operate as long as normal power is available. Upon loss of normal power, the "B" and "C" CCW pumps are automatically loaded onto the emergency diesel generator (EDG) buses as long as an SI signal is not present. If a Containment Spray signal occurs after the EDG loading sequence has been completed, the CCW pumps are stripped from the buses. The "B" and "C" CCW pumps are not loaded onto the EDG buses as part of the SI loading sequence, however, they are capable of manual start when EDG loads allow.

Additional information on the design and operation of the system, along with a list of the components served, is presented in the UFSAR, Section 9.2.2 (Ref. 1). The principal safety related function of the CCW System is the removal of decay heat from the reactor via the Residual Heat Removal (RHR) System. This may be during a normal or post accident cooldown and shutdown.

(continued)

80. Given the following:

- The plant is in MODE 5 with RHR Pump "A" in service.
- A loss of the Startup Transformer has occurred.
- ALL equipment functioned as designed.
- NO local actions have been performed.
- The Instrument Air Header is depressurized.
- The crew has implemented AOP-017, LOSS OF INSTRUMENT AIR.

AOP-020, LOSS OF RESIDUAL HEAT REMOVAL (SHUTDOWN COOLING)

What is the plant response and what actions are required to restore core cooling?

FCV-605, RHR BYPASS FLOW and HCV-758, RHR DISCH FLOW fail...

A. OPEN; AOP-017 performs ALL required actions.

B. OPEN; Perform AOP-020 and AOP-017 concurrently.

C. CLOSED; AOP-017 performs ALL required actions.

D. CLOSED; Perform AOP-020 and AOP-017 concurrently.

000055 EA2.01 001/STATION BLACKOUT/1/1/3.4/3.7/SRO/HIGH/43.5/NEW - 2008/AOP-024-007

Given the following:

- The plant is in MODE 5 with RHR Pump "A" in service.
- A loss of the Startup Transformer has occurred.
- ALL equipment functioned as designed.
- NO local actions have been performed.
- The Instrument Air Header is depressurized.
- The crew has implemented AOP-017, LOSS OF INSTRUMENT AIR.

AOP-020, LOSS OF RESIDUAL HEAT REMOVAL (SHUTDOWN COOLING)

What is the plant response and what actions are required to restore core cooling?

FCV-605, RHR BYPASS FLOW and HCV-758, RHR DISCH FLOW fail...

A. OPEN; AOP-017 performs ALL required actions.

B. OPEN; Perform AOP-020 and AOP-017 concurrently.

C. CLOSED; AOP-017 performs ALL required actions.

D. CLOSED; Perform AOP-020 and AOP-017 concurrently.

The correct answer is D.

A: Incorrect - FCV-605 and HCV-758 both fail CLOSED on a loss of instrument air. AOP-017 will restore Instrument Air, but does NOT restart the non-running RHR pump.

B: Incorrect - FCV-605 and HCV-758 both fail CLOSED on a loss of instrument air. AOP-020 and AOP-017 must be used concurrently to restore core cooling. Correct procedure, but incorrect failure of RHR valves.

C: Incorrect - FCV-605 and HCV-758 both fail CLOSED on a loss of instrument air, but AOP-017 will NOT restart the non-running RHR pump.

D: Correct - FCV-605 and HCV-758 both fail CLOSED on a loss of instrument air, AOP-017 and AOP-020 must be used concurrently to restore IA and restart the RHR pump because the SI sequencer is defeated when in MODE 5.

Exam Question Number: 80

Reference: AOP-017, Pages 3 and 36; AOP-020, Pages 3, 4, 60-62..

KA Statement: Ability to determine or interpret the following as they apply to a Station Blackout: Existing valve positioning on a loss of instrument air system.

History: New - Written for HLC-08 NRC Exam.

SRO - Requires analysis of plant conditions, prediction of subsequent failures during abnormal and emergency plant conditions, selection of mitigating procedures.

| | | | |
|---|---|---|---|
| KA Name: | STATION BLACKOUT | Tier/Group: | 1/1 |
| Importance Rating: | 3.4/3.7 | RO/SRO Level: | SRO |
| Cognitive Level: | HIGH | 10CFR55.43 link: | 43.5 |
| Source: | NEW - 2008 | Learning Objective: | AOP-024-007 |

## Purpose and Entry Conditions

(Page 1 of 1)

1. PURPOSE

   This procedure provides instructions in the event a loss of Instrument Air occurs.

2. ENTRY CONDITIONS

   a. Instrument Air Header pressure less than 85 psig.

   b. Instrument Air System pipe break.

- END -

ATTACHMENT 1

MAJOR COMPONENTS AFFECTED BY LOSS OF IA

(Page 3 of 5)

6. Isolation Valve Seal Water System Components FAIL POSITION

   a. PCV-1922 A & B, IVSW AUTO HEADER ISOLs - OPEN

7. Main Steam System Components FAIL POSITION

   a. MAIN STEAM ISOLATION VALVES - CLOSED

   b. STEAM LINE PORVs - CLOSED

8. Primary Sample System Components FAIL POSITION

   a. PS-956 A through H, PRIMARY SAMPLE ISOLATIONS - CLOSED

9. Radiation Monitoring System Components FAIL POSITION

   a. RMS-1,2,3 & 4, R-11/R-12 ISOL VALVES - CLOSED

10. Reactor Coolant System Components FAIL POSITION

    a. PCV-455 A & B, PZR SPRAYS - CLOSED

    b. RC-516 & 553, PRT TO GAS ANALYZER - CLOSED

    c. RC-519 A & B, PW TO CV ISOs - CLOSED

    d. RC-544, RV FLANGE LEAKOFF - OPEN

    e. RC-550, PRT NITROGEN SUPPLY - CLOSED

11. Residual Heat Removal System Components FAIL POSITION

    a. HCV-142, PURIFICATION FLOW - CLOSED

    b. HCV-758, RHR HX DISCH FLOW - CLOSED

    c. FCV-605, RHR HX BYPASS FLOW - CLOSED

| STEP | INSTRUCTIONS | RESPONSE NOT OBTAINED |
|---|---|---|

1. PURPOSE

This procedure provides the instructions necessary to mitigate the loss of RHR in all conditions for which RHR can be aligned to provide shutdown cooling. This includes loss of RHR cooling for reasons such as RCS leakage, loss of power, loss of Service Water or Component Cooling Water, RHR pump cavitation, and inadequate RHR flow or abnormal reductions in RHR cooling.

This procedure is applicable in Modes 4, 5, and 6 when fuel is in the vessel.

2. ENTRY CONDITIONS

Direct entry from any condition resulting in a loss of RHR pump(s), RHR pump cavitation, abnormal RHR flow or temperature control, or excessive loss of RCS inventory while RHR is aligned for shutdown cooling.

As directed by the following other procedures:

- AOP-005, Radiation Monitoring System, when a low level in the SFP exists due to an RCS leak with the SFP GATE VALVE open.
- AOP-014, Component Cooling Water System Malfunction, resulting in stopping of the RHR Pumps while in CSD.
- AOP-016, Excessive Primary Plant Leakage, if less than 200°F and leakage exceeds Charging Capacity.
- AOP-017, Loss Of Instrument Air, if the loss of Instrument Air has affected core cooling while on RHR.

- END -

| STEP | INSTRUCTIONS | RESPONSE NOT OBTAINED |
|---|---|---|
| * 1. | Check RCS Level - LESS THAN -72 INCHES (69% FULL RANGE RVLIS) | IF RCS Level becomes less than -72 inches (69% FULL RANGE RVLIS), THEN verify BOTH RHR Pumps stopped.<br><br>Go To Step 3. |
| 2. | Verify BOTH RHR Pumps - STOPPED | |
| 3. | Make PA Announcement For Procedure Entry | |

NOTE

FRP-S.1 is NOT applicable for this event unless directed by the CSFSTs.

| | | |
|---|---|---|
| 4. | From The RTGB, Verify Reactor Tripped As Follows:<br>• REACTOR TRIP MAIN AND BYP - OPEN<br>• Rod Position indication - ZERO<br>• Rod Bottom lights - ILLUMINATED | IF the reactor does NOT trip, THEN dispatch an Operator to the Rod Drive MG Set Room to Open REACTOR TRIP BREAKERS A AND B. |
| 5. | Check RCS Level - DECREASING:<br>• Pressurizer level<br>OR<br>• RCS loop standpipe level<br>OR<br>• RVLIS<br>OR<br>• Refueling Cavity Watch report | IF either PZR PORV is failed open due to loss of input from PT-500 OR PT-501, THEN place the associated LTOPP Arming Switch to the NORMAL position.<br><br>IF the event does NOT involve a loss of Inventory, THEN Go To Section E, Loss Of RHR Flow Or Temperature Control.<br><br>IF RHR Pumps have been stopped due to loss of Inventory, THEN Go To Step 6. |

| STEP | INSTRUCTIONS | RESPONSE NOT OBTAINED |
|---|---|---|

Section E

Loss Of RHR Flow Or Temperature Control

(Page 1 of 20)

| | | |
|---|---|---|
| 1. | Implement the EALs | |
| 2. | Check CV Closure Status - PENETRATIONS OPEN | Go To Step 8. |
| 3. | Check Refueling Cavity Level - 29 INCHES OR GREATER BELOW THE OPERATING DECK | Go To Step 8. |
| 4. | Initiate CV Closure Using OMM-033, CV Closure | |
| 5. | Check SI Pumps - ONE SI PUMP AVAILABLE TO START FROM RTGB | Dispatch an operator to the E-1/E-2 Room to prepare to verify the breaker Racked In AND Fuses Installed for ONE SI Pump when notified by the Control Room. |
| * 6. | Check Core Exit T/Cs - LESS THAN 200°F | Verify ONE SI Pump breaker is Racked In AND Fuses Installed.<br><br>Go To Step 44. |
| * 7. | Check Core Exit T/Cs - LESS THAN 175°F | Verify ONE SI Pump breaker is Racked In AND Fuses Installed while continuing with step in effect. |
| 8. | Check Reason For Entry:<br>• LOW FLOW<br>OR<br>→ • RHR PUMP TRIP | Go To Step 19. |

| STEP | INSTRUCTIONS | RESPONSE NOT OBTAINED |
|---|---|---|

Section E

Loss Of RHR Flow Or Temperature Control

(Page 2 of 20)

**********

CAUTION

Changes in RCS pressure may result in inaccuracies in RCS Loop Standpipe indications.

**********

| | | |
|---|---|---|
| 9. | Check RHR Pumps - ALL STOPPED | Observe the NOTE prior to Step 12 and Go To Step 12. |

NOTE

The intent of this procedure is to maintain the CV Purge in service if the Equipment Hatch is not installed.

| | | |
|---|---|---|
| 10. | Check power supply to at least one RHR Pump - AVAILABLE: | Initiate CV Closure Using OMM-033, CV Closure. |
| | • RESIDUAL HEAT REMOVAL PUMP A - E-1 (CMPT-22A) | Go To Step 32 |
| | OR | |
| | • RESIDUAL HEAT REMOVAL PUMP B - E-2 (CMPT-26B) | |

| STEP | INSTRUCTIONS | RESPONSE NOT OBTAINED |
|---|---|---|

Section E

Loss Of RHR Flow Or Temperature Control

(Page 3 of 20)

| | | |
|---|---|---|
| 11. | Determine RHR Status As Follows: | |
| | a. Check CCW - AVAILABLE | a. Go To Step 23. |
| | b. Adjust FC-605, RHR HX BYPASS FLOW Controller 0% (Closed) | |
| | c. Adjust HIC-758, RHR HX DISCH FLOW, 0% (Closed) | |
| | → d. Attempt to start the standby RHR pump | |
| | e. Check RHR Pumps - ONE RUNNING | e. Observe the NOTE prior to Step 10 and Go To Step 10. |
| | f. Adjust FC-605, RHR HX BYPASS FLOW Controller, To Restore Flow Between 3000 gpm And 3750 gpm | |
| | g. Adjust HIC-758, RHR HX DISCH FLOW, To Obtain Desired Cooling | |

81. EPP-26, LOSS OF DC BUS "A" contains this CAUTION prior to Step 1:

CAUTION

"Restoration of DC Control Power to a de-energized AC Bus before Steps 16 through 23 have been completed may result in uncontrolled equipment starts."

(Steps 16-23 strips all load breakers on 4160V Busses 1 and 2, 480V Busses 1 and 2A).

Which ONE (1) of the following describes the basis for this CAUTION?

A. DC start contactors on some AC equipment may have latched to the START condition, allowing restart on restoration of AC power.

B. Breaker anti-pump features will NOT be available to protect the breakers and equipment upon restart.

C. 4160V Busses 1 and 2 and the busses downstream are de-energized with load breakers still closed. On power restoration, auto transfer could occur before the load breakers trip on Undervoltage, allowing connected equipment to start.

D. Breakers on equipment connected to busses downstream of 4160V Busses 1 and 2 automatically re-close on restoration of AC power if their Undervoltage relays have been re-energized.

000058 G2.1.32 001/LOSS OF DC POWER/1/1/3.8/4.0/SRO/LOW/43.5/NEW - 2008/EPP-26-003

EPP-26, LOSS OF DC BUS "A" contains this CAUTION prior to Step 1:

CAUTION

"Restoration of DC Control Power to a de-energized AC Bus before Steps 16 through 23 have been completed may result in uncontrolled equipment starts."

(Steps 16-23 strips all load breakers on 4160V Busses 1 and 2, 480V Busses 1 and 2A).

Which ONE (1) of the following describes the basis for this CAUTION?

A. DC start contactors on some AC equipment may have latched to the START condition, allowing restart on restoration of AC power.

B. Breaker anti-pump features will NOT be available to protect the breakers and equipment upon restart.

C. 4160V Busses 1 and 2 and the busses downstream are de-energized with load breakers still closed. On power restoration, auto transfer could occur before the load breakers trip on Undervoltage, allowing connected equipment to start.

D. Breakers on equipment connected to busses downstream of 4160V Busses 1 and 2 automatically re-close on restoration of AC power if their Undervoltage relays have been re-energized.

The correct answer is C.

A: Incorrect - DC start contactors do NOT have latch conditions.

B: Incorrect - Breaker anti-pump circuits are restored as soon as DC power is restored.

C: Correct - Potential for uncontrolled start of equipment upon power restoration.

D: Incorrect - Upon power restoration, loads should strip, NOT re-energize if DC UV coils are energized.

Exam Question Number: 81

Reference: EPP-26, Page 4; EPP-26-BD, Page 4.

KA Statement: Ability to explain and apply system limits and precautions.

History: New - Written for HLC-08 NRC Exam.

SRO - Knowledge of cautions and basis for cautions in procedures past Immediate Action steps.

| | | | |
|---|---|---|---|
| KA Name: | LOSS OF DC POWER | Tier/Group: | 1/1 |
| Importance Rating: | 3.8/4.0 | RO/SRO Level: | SRO |
| Cognitive Level: | LOW | 10CFR55.43 link: | 43.5 |
| Source: | NEW - 2008 | Learning Objective: | EPP-26-003 |

| STEP | INSTRUCTIONS | RESPONSE NOT OBTAINED |
|---|---|---|

**********

CAUTION

Restoration of DC Control Power to a deenergized AC Bus before Steps 16 through 23 have been completed may result in uncontrolled equipment starts.

**********

| | | |
|---|---|---|
| * 1. | Check The Cause Of The DC Bus Failure - KNOWN | WHEN the cause is determined, THEN notify Maintenance to correct the problem. |

NOTE

AFW PUMP A will not be available due to loss of control power to the breaker.

| | | |
|---|---|---|
| 2. | Maintain S/G Levels Between 8% And 50% Using Available AFW Pumps:<br>• AFW PUMP B<br>• STEAM DRIVEN AFW PUMP | |
| 3. | Check SI Signal - INITIATED | Go To Step 5. |

STEP SPECIFIC DESCRIPTION AND RNP DIFFERENCES

The following pages will provide the RNP step number. There is no ERG for this procedure.

| RNP STEP | BASIS |
|---|---|
| PEC | This procedure will be entered from EPP-4 or EPP-7 based on the initial conditions at the time of the loss of DC. If the pant is at power (> 100 MW) it is expected that the entry will be via EPP-7. |
| C1 | The Caution is provided to warn the Operator of the possibility of equipment performing uncontrolled equipment starts. If the loss of DC Bus A occurred from an at power condition the busses fed downstream of 4160V Busses 1 and 2 are deenergized with load breakers still closed. If DC Control Power is restored to the 4160V busses and an automatic transfer occurs before the load breakers trip on undervoltage all equipment will start simultaneously. The step below the Caution will initiate efforts to restore the faulted DC Bus. |
| 1 | This step is provided to initiate efforts to repair the faulted DC Bus. It is placed early in the procedure so that efforts can be made to contact Maintenance personnel. The high level step provides direction to diagnose the cause and provides transitional guidance. There are three possible failure mechanisms that are the most likely causes:<br>• Fault on A Battery<br>• Fault on A Battery Bus<br>• Fault on MCC-5<br>The failure, or tripping, of the in-service Battery Charger, is not a likely cause of the loss of DC since warning would be provided via an annunciator with ample time for Operator action to transfer the chargers. |
| N2 | The note reminds the Operator that since DC BUS A has been lost, no control power is available for AFW PUMP A. The subsequent step will control S/G level. |
| 2 | S/G level is maintained in order to provide a heat sink. B AFW pump and the SDAFW pump are specified because A AFW pump is not available due to the loss of DC. |
| 3 | Subsequent steps will reset an SI Signal. This diagnostic step provides Transitional direction should the event have occurred with the Unit Auxiliaries being powered from the SUT. In this case the RNO bypasses the steps to reset SI and restore Instrument Air to the CV. |
| 4 | If an SI has occurred it will be necessary to restore Instrument Air to the CV in order to perform subsequent steps such as placing Excess Letdown in service. The step provided resets SI and Phase A then restores IA to the CV. PCV-1716 should be available during a loss of DC Bus A since its solenoid is powered from Auxiliary Panel GC (DC Bus B). Resetting SI is possible since Train A has not initiated and Train B has control Power. If resetting the Isolation Signal is unsuccessful in restoring IA to the CV, the valve is placed in the Override position which places control power from Aux Panel GC directly on the solenoid for opening the valve. Instrument Air pressure is verified prior to attempting to place air in the CV in order to assure air pressure is higher than potential CV pressure. If IA is not established the steps for placing Excess letdown in service are also bypassed since this also requires air in the CV. |
| 5 | This step provides the means to control PZR level during the loss of DC. Excess Letdown is used because power is lost to the Normal Letdown Valves. Letdown is necessary to control PZR level since Seal Injection must be maintained. |

82. Given the following:

- A Reactor Trip has occurred from 100% RTP.
- The BA Transfer Pump aligned to BLEND has tripped.
- The crew is implementing EPP-4, REACTOR TRIP RESPONSE.
- At Step 13, "Check ALL rods fully inserted" the following is noted:
  - Rod M-6 is at 9 inches.
  - Rod H-4 is at 14 inches.
  - Rod F-12 is at 20 inches.

Which ONE (1) of the following is the action required?

A. Begin Boration by OPENING LCV-115B, EMER MU TO CHG SUCT AND CLOSING LCV-115C, VCT OUTLET.

B. Begin Boration using Normal Boration path via FCV-113A, BA FLOW and FCV-113B, BLENDED MU TO CHG SUCT.

C. Borate using EMER BORATION, MOV-350, BA TO CHARGING PMP SUCT.

D. Continue to Step 14 (No boration is required).

000024 A2.02 001/EMERG BORATION/1/2/3.9/4.4/SRO/HIGH/43.5/NEW - 2008/EPP-4-003

Given the following:

- A Reactor Trip has occurred from 100% RTP.
- The BA Transfer Pump aligned to BLEND has tripped.
- The crew is implementing EPP-4, REACTOR TRIP RESPONSE.
- At Step 13, "Check ALL rods fully inserted" the following is noted:
  - Rod M-6 is at 9 inches.
  - Rod H-4 is at 14 inches.
  - Rod F-12 is at 20 inches.

Which ONE (1) of the following is the action required?

A. Begin Boration by OPENING LCV-115B, EMER MU TO CHG SUCT AND CLOSING LCV-115C, VCT OUTLET.

B. Begin Boration using Normal Boration path via FCV-113A, BA FLOW and FCV-113B, BLENDED MU TO CHG SUCT.

C. Borate using EMER BORATION, MOV-350, BA TO CHARGING PMP SUCT.

D. Continue to Step 14 (No boration is required).

The correct answer is A.

A: Correct - IAW EPP-4, boration must be initiated if 2 rods are NOT fully inserted. NOT fully inserted is any rod above 12.0 inches as defined in OMM-022. The ONLY correct flowpath available is the Emergency Makeup flowpath using LCV-115B, LCV-115C must be closed to cause water to enter Charging Pump suction, since there is NO BA transfer pump aligned to BLEND.

B: Incorrect - Flowpath is a viable flowpath as listed in EPP-4 if there is a BA transfer pump aligned to BLEND. The stem indicates there is NO pump available, therefore opening these valves would NOT initiate a boration.

C: Incorrect - Flowpath is a viable flowpath as listed in EPP-4 if there is a BA transfer pump aligned to BLEND. The stem indicates there is NO pump available, therefore opening this valve would NOT initiate a boration.

D: Incorrect - IAW EPP-4, boration must be initiated if 2 rods are NOT fully inserted. NOT fully inserted is any rod above 12.0 inches as defined in OMM-022. This action would be correct if ONLY 1 rod were NOT fully inserted.

Exam Question Number: 82

Reference: EPP-4, Pages 10-11; SD-021, CVCS, Figure 2; OMM-022, Page 53.

KA Statement: Ability to determine and interpret the following as they apply to the Emergency Boration: When use of manual boration valve is needed.

History: New - Written for HLC-08 NRC exam.

SRO - Requires analysis of plant conditions and selection of mitigating procedure.

| | | | |
|---|---|---|---|
| KA Name: | EMERG BORATION | Tier/Group: | 1/2 |
| Importance Rating: | 3.9/4.4 | RO/SRO Level: | SRO |
| Cognitive Level: | HIGH | 10CFR55.43 link: | 43.5 |
| Source: | NEW - 2008 | Learning Objective: | EPP-4-003 |

SRO T1 G2 000024 A202



| STEP | INSTRUCTIONS | RESPONSE NOT OBTAINED |
|---|---|---|

**********

CAUTION

The boration pathway through FCV-114B does NOT have heat trace. Use of this pathway without flush water could result in blockage of the pathway.

**********

| | | |
|---|---|---|
| → 13. | Check All Control Rods - FULLY INSERTED | → IF only one Control Rod is stuck out, THEN Go To Step 14.<br><br>→ IF two or more Control Rods are stuck out, THEN perform the following:<br><br>a. Verify at least one Charging Pump is RUNNING.<br><br>b. Borate to cold shutdown boron concentration using one of the following:<br><br>→ • Blender to Charging Pump suction:<br><br>1) Open FCV-113A, BA TO BLENDER.<br><br>2) Open FCV-113B, BLENDED MU TO CHG SUCT.<br><br>3) Start Boric Acid Pump aligned for blend.<br><br>OR<br><br>• RWST to Charging Pump suction:<br><br>1) Open LCV-115B, EMERG MU TO CHG SUCT, OR locally open CVC-358, RWST TO CHARGING PUMP SUCTION.<br><br>2) Close LCV-115C, VCT OUTLET.<br><br>OR |

(CONTINUED NEXT PAGE)

| STEP | INSTRUCTIONS | RESPONSE NOT OBTAINED |
|---|---|---|
| 13. | (CONTINUED) | |
| | | • Blender to VCT:<br>1) Open FCV-113A, BA TO BLENDER.<br>2) Open FCV-114B, BLENDED MU TO VCT.<br>3) Start Boric Acid Pump aligned for blend.<br><u>OR</u><br>• Emergency boration:<br>1) Open MOV-350, BA TO CHARGING PMP SUCT.<br>2) Start Boric Acid Pump aligned for blend.<br>3) Verify boric acid flow on FI-110. |
| | | c. Open CVC-310B, LOOP 2 COLD LEG CHG.<br><br><u>IF</u> CVC-310B will <u>NOT</u> open, <u>THEN</u> open CVC-310A, LOOP 1 HOT LEG CHG. |
| | | d. Verify charging flow on FI-122A. |
| 14. | Check PZR Level - LESS THAN 14% | Go To Step 16. |

# CVCS FLOW DIAGRAM, SIMPLIFIED

CVCS-FIGURE-2

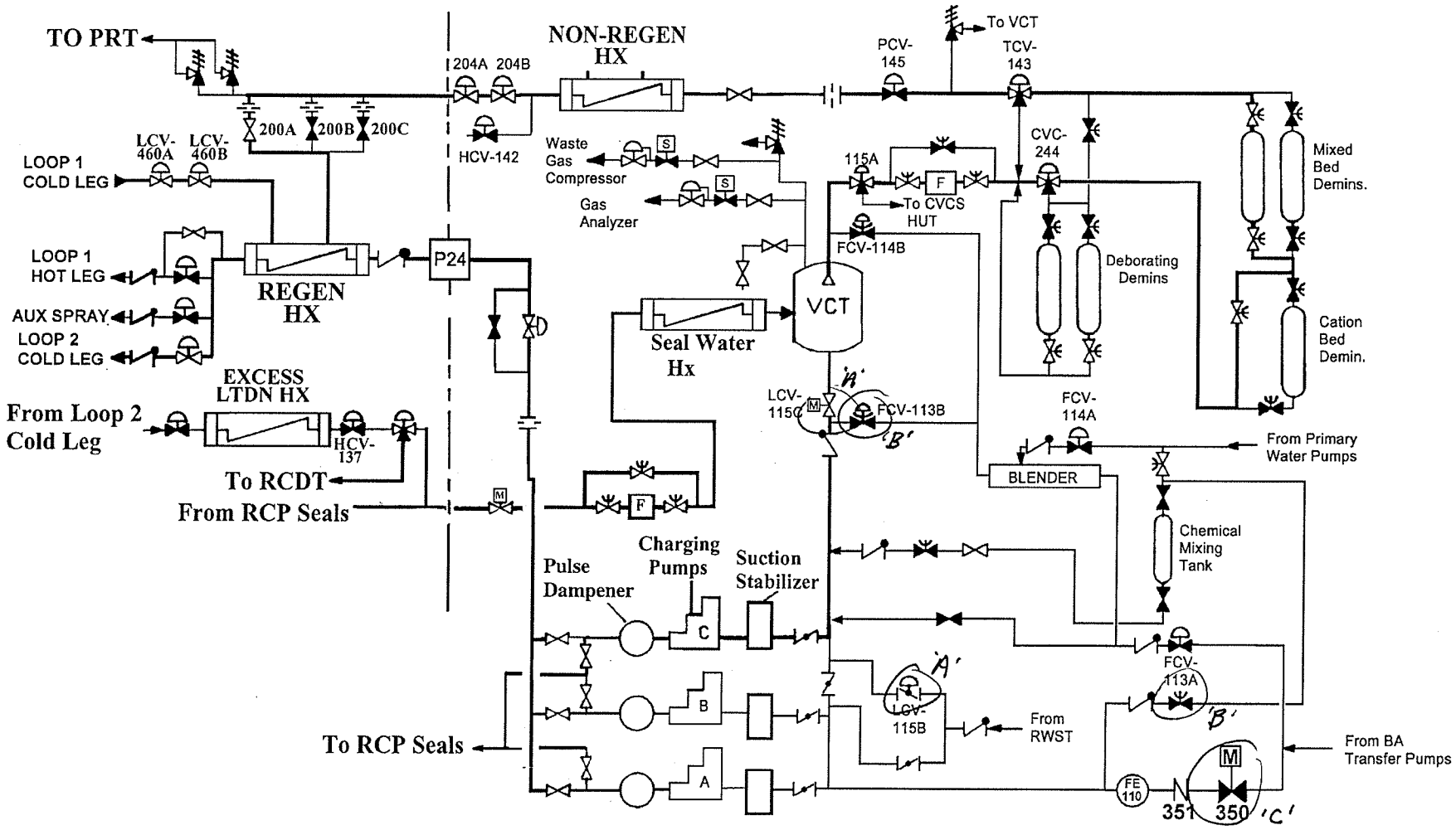


***INFORMATION USE ONLY***

1.1.9 **Recirculation Mode** - When referenced for the current status of the RHR System, the system is aligned to take a suction on the CV Sump and discharge to the loops.

1.1.10 **Redundant** - (In reference to an indication) Having multiple indications of the same type for the same parameter. An example of redundant indication is verification of S/G level using all three narrow range level channels.

→ 1.1.11 **Rod On Bottom** - A Control Rod is defined as "on the bottom" when NARPI indication shows a position of less than or equal to 12". This originates from Westinghouse Documentation ESBU/WOG 96-0080, which defines rod bottom occurring at entry to the dash pot. Dash Pot entry occurs at 20 steps from the bottom which is equal to 12.5". The value is rounded down to the nearest legible increment on the NARPI.

1.1.12 S/G Status:

1. **Ruptured S/G** - Any generator with failed tubes resulting in a loss of the RCS pressure boundary greater than RCS makeup capability.

2. **Faulted S/G** - A faulted S/G is any generator with a steam line or feedwater line break associated with it.

3. **Leaking S/G** - Any generator with failed tubes resulting in a loss of the RCS pressure boundary within RCS makeup capability.

1.1.13 **S/G Level** - Unless otherwise stated, a step which refers to S/G level means narrow range S/G level. A step which requires the use of wide range S/G level will state specifically to use wide range S/G level.

1.1.14 **Stable** - (In reference to a parameter) To be within the normal control band or controllable within some desired range.

1.1.15 **Uncontrolled** - Refers to a condition that is not under the control of the operator and is incapable of being controlled by the operator using available equipment.

83. Given the following:

- Plant startup is in progress IAW GP-005, POWER OPERATION.
- Reactor is at 8% RTP.
- Reactor Engineering has notified the SSO that BOTH Intermediate Range High Flux Trip setpoints were determined to be set non-conservative.
- The SSO has declared BOTH IR Channels INOPERABLE.

Which ONE (1) of the following describes the action(s) that must be taken in order to comply with Technical Specification requirements?

A. Immediately suspend operations involving positive reactivity additions AND reduce thermal power to < P-6 within 2 hours.

B. Reduce thermal power to < P-6 within 2 hours OR increase thermal power to > P-10 within 2 hours.

C. Place channels in TRIP within 6 hours or be in MODE 3 within 12 hours.

D. Open the Reactor Trip Breakers immediately.

000033 A2.10 001/LOSS ON IR NI/1/2/3.1/3.8/SRO/LOW/43.5/FARLEY- 2001/NIS-011

Given the following:

- Plant startup is in progress IAW GP-005, POWER OPERATION.
- Reactor is at 8% RTP.
- Reactor Engineering has notified the SSO that BOTH Intermediate Range High Flux Trip setpoints were determined to be set non-conservative.
- The SSO has declared BOTH IR Channels INOPERABLE.

Which ONE (1) of the following describes the action(s) that must be taken in order to comply with Technical Specification requirements?

A. Immediately suspend operations involving positive reactivity additions AND reduce thermal power to < P-6 within 2 hours.

B. Reduce thermal power to < P-6 within 2 hours OR increase thermal power to > P-10 within 2 hours.

C. Place channels in TRIP within 6 hours or be in MODE 3 within 12 hours.

D. Open the Reactor Trip Breakers immediately.

The correct answer is A.

A: Correct - LCO 3.3.1, Condition G actions required if TWO IR channels INOPERABLE with power > P-6, but < P-10.

B: Incorrect - LCO 3.3.1, Condition F actions required if ONE IR channel INOPERABLE with power > P-6, but < P-10.

C: Incorrect - Actions required for most INOPERABLE instrument channels to remove the channel from service, NIs would be BYPASSED instead of removed from service in this manner.

D: Incorrect - LCO 3.3.1, Condition J action for TWO Source Range Channels INOPERABLE. This action is NOT applicable because both SR instruments are deenergized.

Exam Question Number: 83

Reference: ITS 3.3.1, Page 3.3-1, 3.3-3

KA Statement: Ability to determine and interpret the following as they apply to the Loss of Intermediate Range Nuclear Instrumentation: Tech-Spec limits if both intermediate range channels have failed.

History: Modified by changing distractors B and D, Removed Subsequent actions and reference to procedures.

SRO - application of required actions AND application of ITS Conditions for Table 3.3.1-1 for Conditions in excess of LCO.

| | | | |
|---|---|---|---|
| KA Name: | LOSS ON IR NI | Tier/Group: | 1/2 |
| Importance Rating: | 3.1/3.8 | RO/SRO Level: | SRO |
| Cognitive Level: | LOW | 10CFR55.43 link: | 43.5 |
| Source: | FARLEY- 2001 | Learning Objective: | NIS-011 |

## 3.3 INSTRUMENTATION

### 3.3.1 Reactor Protection System (RPS) Instrumentation

LCO 3.3.1 The RPS instrumentation for each Function in Table 3.3.1-1 shall be OPERABLE.

APPLICABILITY: According to Table 3.3.1-1.

ACTIONS

----------NOTE----------
Separate Condition entry is allowed for each Function.
---

| CONDITION | REQUIRED ACTION | | COMPLETION TIME |
|---|---|---|---|
| A. One or more Functions with one or more required channels inoperable. | A.1 | Enter the Condition referenced in Table 3.3.1-1 for the channel(s). | Immediately |
| B. One Manual Reactor Trip channel inoperable. | B.1 | Restore channel to OPERABLE status. | 48 hours |
| | OR | | |
| | B.2.1 | Be in MODE 3. | 54 hours |
| | AND | | |
| | B.2.2 | Open reactor trip breakers (RTBs). | 55 hours |

(continued)

ACTIONS (continued)

| CONDITION | REQUIRED ACTION | | COMPLETION TIME |
|---|---|---|---|
| E. One channel inoperable. | E.1 | Place channel in trip. | 6 hours |
| | OR | | |
| | E.2 | Be in MODE 3. | 12 hours |
| F. THERMAL POWER > P-6 and < P-10, one Intermediate Range Neutron Flux channel inoperable. | F.1 | Reduce THERMAL POWER to < P-6. | 2 hours |
| | OR | | |
| | F.2 | Increase THERMAL POWER to > P-10. | 2 hours |
| G. THERMAL POWER > P-6 and < P-10, two Intermediate Range Neutron Flux channels inoperable. | G.1 | --------NOTE--------- Limited boron concentration changes associated with RCS inventory control or limited plant temperature changes are allowed. ---------- | |
| | | Suspend operations involving positive reactivity additions. | Immediately |
| | AND | | |
| | G.2 | Reduce THERMAL POWER to < P-6. | 2 hours |

(continued)

FARLEY 2001

B - Correct, If one SR is lost all fuel movement must be suspended per TS 3.9.2. Must have two SR and one audible count rate operable.
Source: Farley Exam Bank Question #O52302M04007
Answer: C

53. 033EG2.1.12 1
A Unit 1 reactor startup is in progress. One hour ago Intermediate Range, IR, channel N-36 was taken out of service due to a power supply problem. The decision was made to continue with the reactor startup, power is currently at 8%.

It is estimated that N-36 will be returned to service in the next 2 hours. The technician working on the N-36 power supply performed an action that resulted in Intermediate Range, IR, N-35 failing low.

Which ONE of the following describes the action(s) that must be taken in order to comply with Technical Specification requirements?

A. Immediately suspend operations involving positive reactivity additions AND reduce thermal power to < P-6 within 2 hours.

B. Place IR N-36 channel level trip switch in the 'BYPASS' position within 6 hours and be in Mode 3, Hot Standby, within 12 hours.

C. Do NOT change power level until at least one IR channel is restored to operable status.

D. Place the IR N-35 channel level trip switch in the 'BYPASS' position and increase thermal power to > P-10 within TWO hours.

A - Correct, Actions required by TS 3.3.1.G. with 2 IR channels lost.
B - Incorrect, Action required if two SR channels were lost.
C - Incorrect, Action if power level was below P-6.
D - Incorrect, Action that was in progress with just the one IR channel was out of service, TS 3.3.1.F.
Source: New
Answer: A

54. 033K3.01 1
Annunciator FH5, "SFP AREA RE25 A OR B HI RAD" is in alarm on Unit 1.

It has been determined that Spent Fuel Pool Exhaust Flow Gas monitors R-25A and R-25B indicate high activity.

Which ONE of the following describes the automatic action(s) that occur as a result of this alarm?

A. The SFP supply and exhaust fans shift to the recirculation mode.

84. Given the following:

- The plant is operating at 100% RTP.
- The Inside AO has reported a 100 GPM leak from the RWST.
- The leak is into the storm drains and appears to be unisolable.

Which ONE (1) of the following actions is required for this event?

A. Implement AOP-008, ACCIDENTAL RELEASE OF LIQUID WASTE. Initiate LOCAL evacuation using EVACUATION ALARM and PA announcement.

B. Implement AOP-008, ACCIDENTAL RELEASE OF LIQUID WASTE. Send personnel to isolate the Settling Ponds and establish access control.

C. Implement PLP-021, CHEMICAL STORAGE, INVENTORY, SPILL AND HAZARD COMMUNICATION PROGRAM, Initiate LOCAL evacuation using EVACUATION ALARM and PA announcement.

D. Implement PLP-021, CHEMICAL STORAGE, INVENTORY, SPILL AND HAZARD COMMUNICATION PROGRAM, send personnel to isolate the Settling Ponds and establish access control.

000059 G2.4.4 001/ACC RADWASTE RELEASE/1/2/4.5/4.7/SRO/LOW/43.5/NEW - 2008/AOP-008-004

Given the following:

- The plant is operating at 100% RTP.
- The Inside AO has reported a 100 GPM leak from the RWST.
- The leak is into the storm drains and appears to be unisolable.

Which ONE (1) of the following actions is required for this event?

A. Implement AOP-008, ACCIDENTAL RELEASE OF LIQUID WASTE. Initiate LOCAL evacuation using EVACUATION ALARM and PA announcement.

B. Implement AOP-008, ACCIDENTAL RELEASE OF LIQUID WASTE. Send personnel to isolate the Settling Ponds and establish access control.

C. Implement PLP-021, CHEMICAL STORAGE, INVENTORY, SPILL AND HAZARD COMMUNICATION PROGRAM, Initiate LOCAL evacuation using EVACUATION ALARM and PA announcement.

D. Implement PLP-021, CHEMICAL STORAGE, INVENTORY, SPILL AND HAZARD COMMUNICATION PROGRAM, send personnel to isolate the Settling Ponds and establish access control.

The correct answer is A.

A: Correct - Leakage from RWST, Monitor Tanks or Waste Condensate Tanks requires entry into AOP-008. Steps 3, 4, 5 & 6 of AOP-008 are paraphrased in "A".

B: Incorrect - Leakage from RWST, Monitor Tanks or Waste Condensate Tanks requires entry into AOP-008. AOP-008 does NOT isolate the Settling Ponds or establish access control.

C: Incorrect - PLP-021 is used for Chemical spills , but borated water is NOT considered a hazardous liquid.

D: Incorrect - PLP-021 is used for Chemical spills , but borated water is NOT considered a hazardous liquid.

Exam Question Number: 84

Reference: AOP-008, Pages 3 and 4, PLP-021, Pages 4 and 38.

KA Statement: Ability to recognize abnormal indications for system operating parameters that are entry-level conditions for emergency and abnormal operating procedures.

History: New - Written for HLC-08 NRC Exam.

SRO - Requires analysis of plant conditions and selection of mitigating procedure.

| | | | |
|---|---|---|---|
| KA Name: | ACC RADWASTE RELEASE | Tier/Group: | 1/2 |
| Importance Rating: | 4.5/4.7 | RO/SRO Level: | SRO |
| Cognitive Level: | LOW | 10CFR55.43 link: | 43.5 |
| Source: | NEW - 2008 | Learning Objective: | AOP-008-004 |

| STEP | INSTRUCTIONS | RESPONSE NOT OBTAINED |
|---|---|---|

1. PURPOSE

   To provide the instruction necessary to respond to a leak from the RWST, Monitor Tank A or B, or Waste Condensate Tank C, D, or E.

2. ENTRY CONDITIONS

   Any unexplained indication of a decrease in any of the following tanks or upon receiving a report that leakage has developed from any of the following tanks:

   - RWST
   - Monitor Tank A or B
   - Waste Condensate Tank C, D, or E

- END -

| STEP | INSTRUCTIONS | RESPONSE NOT OBTAINED |
|---|---|---|
| 1. | Check Leak Status - CONFIRMED BY LOCAL VISUAL INSPECTION | Perform the following:<br><br>a. Perform a local visual inspection for leakage prior to continuing.<br><br>b. <u>IF</u> external leakage is found, <u>THEN</u> Go To Step 2.<br><br>c. <u>IF</u> leakage is <u>NOT</u> found, <u>THEN</u> perform the following:<br><br>1) Contact I&C to determine the problem with level indication.<br><br>2) Return to procedure and step in effect. |
| → 2. | Locally Identify The Source Of Leakage To Determine If It Is Isolable | |
| → 3. | Evacuate Unnecessary Personnel From The Affected Area As Follows:<br><br>a. Place the VLC switch in EMERG<br><br>b. Place and hold the EVACUATION ALARM switch in the LOCAL position for 15 seconds<br><br>c. Make a PA System announcement for all unnecessary personnel to stand clear of the affected area due to a leak in progress<br><br>d. Place and hold the EVACUATION ALARM switch in the LOCAL position for 15 seconds<br><br>e. Repeat the announcement<br><br>f. Place the VLC switch in NORM | |

## 1.0 PURPOSE{ TC "PURPOSE" \f C \l "1" }

1.1 This procedure implements the Chemical Safety and Health Management Program, the U. S. Hazard Communication Standard (29 CFR 1910.1200) as adopted by the South Carolina Department of Labor, The Comprehensive Environmental Response, Compensation and Liability Act and the Emergency Planning and Community Right To Know Act. The procedure also provides chemical storage, handling, hazard, and spill information.

1.2 This procedure provides guidance for:

1.2.1 Emergency plans for accidental chemical release.

1.2.2 Chemical spills at RNP and Robinson Unit I and Darlington County Electric Plant.

1.2.3 The preparation of Tier II EPCRA reports and 90 day inventory change EPCRA reporting requirements.

1.2.4 Employee Right to Know Requirements

| | |
|---|---|
| **NOTE:** | The Robinson/Darlington Co. Fossil Plants **SHOULD** comply with applicable portions of this procedure. |

## 2.0 REFERENCES{ TC "REFERENCES" \f C \l "1" }

2.1 SAF-SUBS-00016, Hazard Communication

2.2 EVC-SUBS-00018, Oil Spill and Chemical Release Notification and Emergency Response

2.3 U. S. Hazard Communication Standard (29 CFR 1910.1200)

2.4 Emergency Response Community Right to Know Act Superfund Amendments and Reauthorization Act of 1986, Title III

2.5 Emergency Preparedness Procedures

2.6 PLP-022, Environmental Regulatory Compliance Responsibilities, Guidelines and Disposal of Hazardous Waste/Surplus Chemicals

2.7 MCP-NGGC-0402, Material Management (Storage, Issue, and Maintenance)

2.8 MCP-NGGC-0401, Material Acquisition (Procurement, Receiving, and Shipping)

2.9 CHE-NGGC-0045, NGG Chemical Control Program Procedure

**CHEMICAL SPILL REPORTABLE QUANTITY LIST**{ TC "CHEMICAL SPILL REPORTABLE QUANTITY LIST" \f C \l "2" }

| CHEMICAL NAME | REPORTABLE QUANTITY POUNDS | APPROXIMATE REPORTABLE QUANTITY GALLONS |
|---|---|---|
| AMMONIUM HYDROXIDE (28%) | 1,000. | 478 |
| ETHYLENE GLYCOL (88-90%) | 5000. | 540 |
| HYDRAZINE (35%) | 1. | 0.33 |
| SODIUM HYDROXIDE (50%) | 1,000. | 157 |
| SODIUM HYPOCHLORITE (12-15%) | 100. | 74 |
| SULFURIC ACID (93%) | 1,000. | 70 |
| POTASSIUM DI-CHROMATE | 10. | * |
| POTASSIUM CHROMATE | 10. | * |
| SODIUM DI-CHROMATE | 10. | * |
| SODIUM CHROMATE | 10. | * |

* Dependent on concentration (PPM) in solution.

85. Given the following:

- The crew has entered FRP-C.1, RESPONSE TO INADEQUATE CORE COOLING.
- RCS temperature by CETC is 750 $^{o}$F.
- Step 21 of the procedure directs the crew to depressurize all intact S/Gs to 140 PSIG.

Which ONE (1) of the following conditions would be entered/violated while performing the procedure actions of Step 21?

A. ITS 2.1.1, Reactor Core Safety Limits. (Combination of Thermal Power, RCS Cold Leg Temperature, and Pressurizer Pressure within limits of Figure 2.1.1.1).

B. ITS 3.4.3, RCS Pressure and Temperature (P/T) Limits. (RCS pressure, Temperature, and Heatup and Cooldown rates within limits of Figures 3.4.3.1 and 3.4.3.2).

C. TRM 3.3, Steam Generator Secondary Side Pressure/Temperature (P/T) Limits. (Secondary side of S/Gs maintained within P/T limits of Figure 3.3.1).

D. ITS 3.4.1, RCS Pressure, Temperature and Flow Departure from Nucleate Boiling (DNB) Limits.

000074 G2.2.42 001/INAD CORE COOLING/1/2/3.9/4.6/SRO/HIGH/43.2/43.3/NEW - 2008/RCS-013

Given the following:

- The crew has entered FRP-C.1, RESPONSE TO INADEQUATE CORE COOLING.
- RCS temperature by CETC is 750 $^{o}$F.
- Step 21 of the procedure directs the crew to depressurize all intact S/Gs to 140 PSIG.

Which ONE (1) of the following conditions would be entered/violated while performing the procedure actions of Step 21?

A. ITS 2.1.1, Reactor Core Safety Limits. (Combination of Thermal Power, RCS Cold Leg Temperature, and Pressurizer Pressure within limits of Figure 2.1.1.1).

B. ITS 3.4.3, RCS Pressure and Temperature (P/T) Limits. (RCS pressure, Temperature, and Heatup and Cooldown rates within limits of Figures 3.4.3.1 and 3.4.3.2).

C. TRM 3.3, Steam Generator Secondary Side Pressure/Temperature (P/T) Limits. (Secondary side of S/Gs maintained within P/T limits of Figure 3.3.1).

D. ITS 3.4.1, RCS Pressure, Temperature and Flow Departure from Nucleate Boiling (DNB) Limits.

The correct answer is B.

A: Incorrect - LCO 2.1.1 is applicable in MODES 1 and 2, since the plant has been shutdown due to an accident and is in MODE 3, 4 or 5, this LCO does NOT apply.

B: Correct - Cooldown limit for the RCS is 100 $^{o}$F/hr. Step 21 of FRP-C.1 will depressurize S/Gs and cooldown the RCS to 365 $^{o}$F. This action will exceed the cooldown limit of Figure 3.4.3-2.

C: Incorrect - TRM 3.3 is applicable at ALL times, but < 1350 PSID will be established with depressurization of S/Gs to 140 PSIG. This ensures that the Steam Generator Vessel temperature remains in the acceptable region.

D: Incorrect - LCO 3.4.1 is applicable in MODE 1, since the plant has been shutdown due to an accident and is in MODE 3, 4 or 5, this LCO does NOT apply.

Exam Question Number: 85

Reference: FRP-C.1, Page 10; ITS 3.4.1, 3.4.3, 2.1.1; TRM 3.3.

KA Statement: Ability to recognize system parameters that are entry-level conditions for Technical Specifications.

History: New - Written for HLC-08 NRC exam.

SRO - requires analysis of plant conditions and selection of applicable ITS condition.

| | | | |
|---|---|---|---|
| KA Name: | INAD CORE COOLING | Tier/Group: | 1/2 |
| Importance Rating: | 3.9/4.6 | RO/SRO Level: | SRO |
| Cognitive Level: | HIGH | 10CFR55.43 link: | 43.2/43.3 |
| Source: | NEW - 2008 | Learning Objective: | RCS-013 |

| STEP | INSTRUCTIONS | RESPONSE NOT OBTAINED |
|---|---|---|

NOTE

- Partial uncovery of S/G tubes is acceptable in the following steps due to steaming faster than feeding.
- After the Low Steamline Pressure SI Signal is blocked, main steamline isolation will occur if the high steam flow rate setpoint is exceeded.

| | |
|---|---|
| *21. Depressurize All Intact S/Gs To 140 PSIG As Follows: | |
| a. Check Steam Dump to Condenser - AVAILABLE | a. Dump steam at maximum rate using STEAM LINE PORVs.<br><br>Go To Step 21.c. |
| b. Dump steam to Condenser at maximum rate | |
| c. Check RCS Hot Leg Temperatures - LESS THAN 543°F | c. <u>WHEN</u> RCS hot leg temperatures less than 543°F, <u>THEN</u> perform Step 21.d.<br><br>Go To Step 21.e. |
| d. Defeat Low Tavg Safety Injection Signal as follows:<br><br>1) Momentarily place SAFETY INJECTION T-AVG Selector Switch to BLOCK position<br><br>2) Verify LO TEMP SAFETY INJECTION BLOCKED status light - ILLUMINATED | |
| e. Check S/G pressures - LESS THAN 140 PSIG | e. <u>IF</u> S/G pressure is decreasing, <u>THEN</u> observe <u>NOTE</u> prior to Step 19 and Go To Step 19.<br><br><u>IF</u> S/G pressure is increasing, <u>THEN</u> Go To Step 28. |

(CONTINUED NEXT PAGE)

## 3.4 REACTOR COOLANT SYSTEM (RCS)

### 3.4.1 RCS Pressure, Temperature, and Flow Departure from Nucleate Boiling (DNB) Limits

LCO 3.4.1 RCS DNB parameters for pressurizer pressure, RCS average temperature, and RCS total flow rate shall be within the limits specified below:

a. Pressurizer pressure ≥ 2205 psig;

b. RCS average temperature ≤ 579.4°F; and

c. RCS total flow rate ≥ 97.3 x $10^6$ lbm/hr.

APPLICABILITY: MODE 1.

----------NOTE----------
Pressurizer pressure limit does not apply during:

a. THERMAL POWER ramp > 5% RTP per minute; or

b. THERMAL POWER step > 10% RTP.
---

ACTIONS

| CONDITION | REQUIRED ACTION | COMPLETION TIME |
|---|---|---|
| A. One or more RCS DNB parameters not within limits. | A.1 Restore RCS DNB parameter(s) to within limit. | 2 hours |
| B. Required Action and associated Completion Time not met. | B.1 Be in MODE 2. | 6 hours |

## 3.4 REACTOR COOLANT SYSTEM (RCS)

### 3.4.3 RCS Pressure and Temperature (P/T) Limits

LCO 3.4.3 RCS pressure, RCS temperature, and RCS heatup and cooldown rates shall be maintained within the limits specified in Figures 3.4.3-1 and 3.4.3-2.

APPLICABILITY: At all times.

ACTIONS

| CONDITION | REQUIRED ACTION | | COMPLETION TIME |
|---|---|---|---|
| A. ---------NOTE--------- Required Action A.2 shall be completed whenever this Condition is entered. ---------- Requirements of LCO not met in MODE 1, 2, 3, or 4. | A.1 | Restore parameter(s) to within limits. | 30 minutes |
| | AND | | |
| | A.2 | Determine RCS is acceptable for continued operation. | 72 hours |
| B. Required Action and associated Completion Time of Condition A not met. | B.1 | Be in MODE 3. | 6 hours |
| | AND | | |
| | B.2 | Be in MODE 5 with RCS pressure < 400 psig. | 36 hours |

(continued)

MATERIALS PROPERTIES BASE
CONTROLLING MATERIAL: Upper Shell Plate
Limiting ART Values at 35 EFPY: 1/4T, 167°F
3/4T, 147°F

Curves applicable for heatup rates up to 60°F/Hr for service period up to 35 EFPY
Heatup Curves include +10°F and -60 psig Allowance for Instrumentation error.

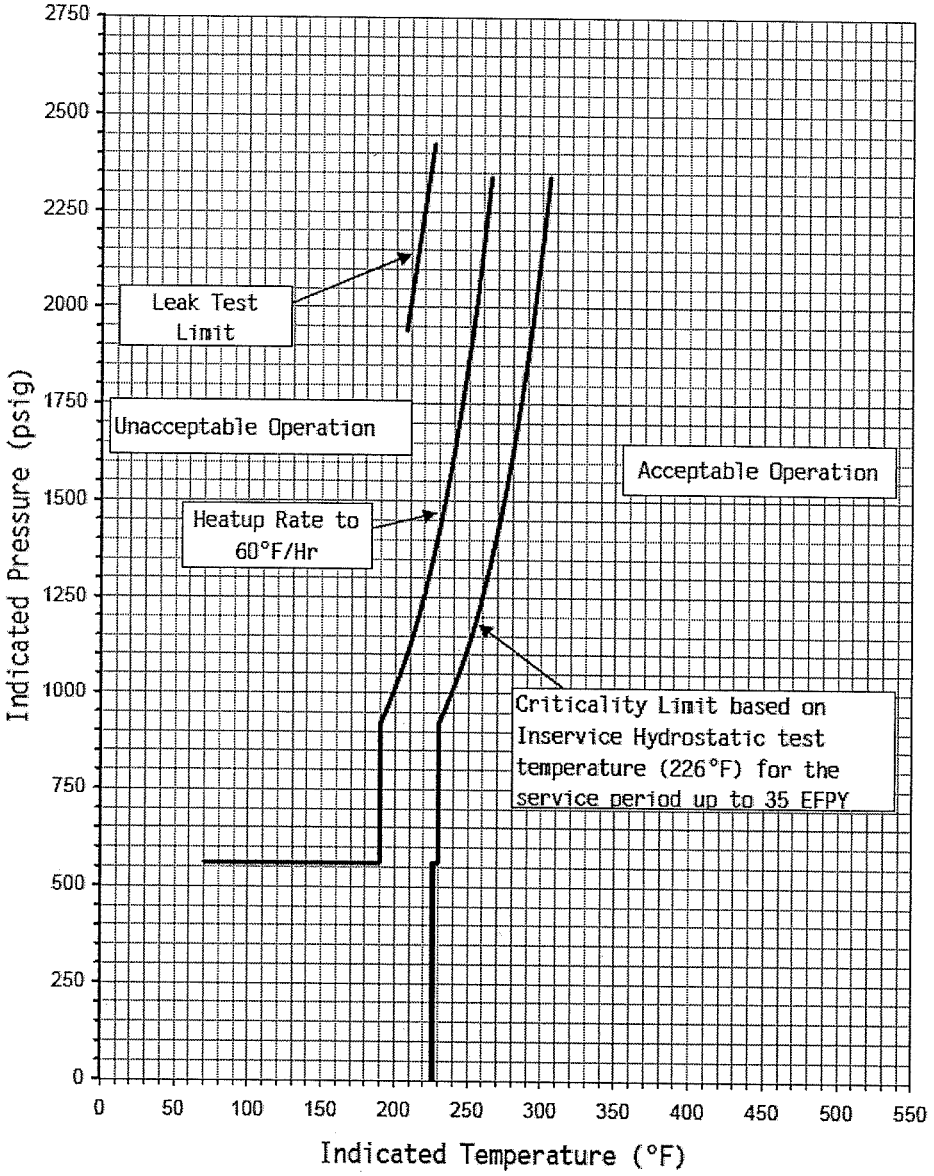


Figure 3.4.3-1
Reactor Coolant System Heatup Limits
Applicable Up to 35 EFPY

MATERIALS PROPERTIES BASE
Controlling Material: Upper Shell Plate and Girth Weld
Limiting ART Values at 35 EFPY: 1/4T, 167°F and 242°F

Curves applicable for cooldown rates up to 100° F/Hr for the service period up to 35 EFPY.
Curves include +10°F and -60 PSIG Allowance for Instrumentation error.

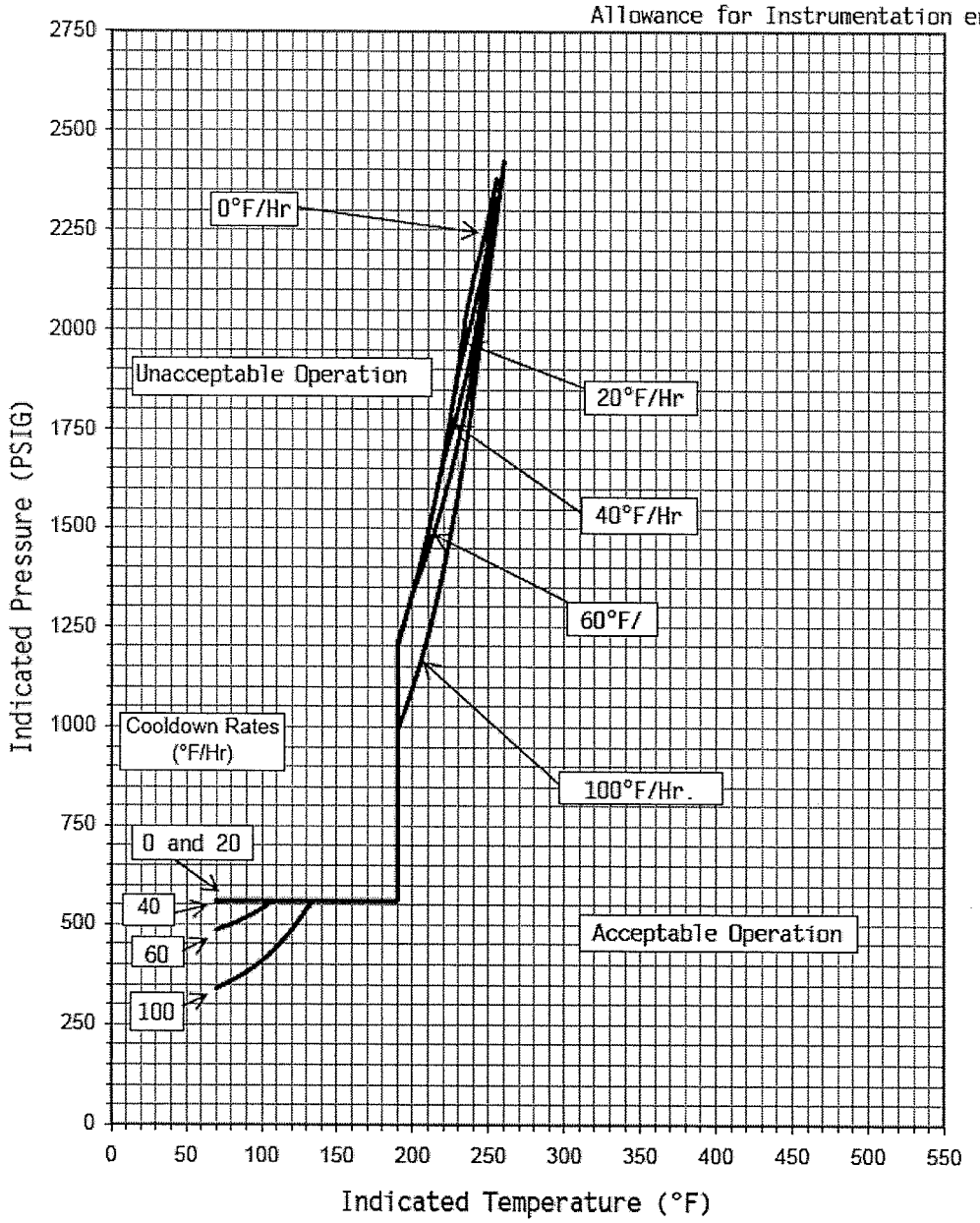


Figure 3.4.3-2
Reactor Coolant System Cooldown Limits
Applicable Up to 35 EFPY

# 2.0 SAFETY LIMITS (SLs)

## 2.1 SLs

### 2.1.1 Reactor Core SLs

In MODES 1 and 2, the combination of THERMAL POWER, Reactor Coolant System (RCS) highest cold leg temperature, and pressurizer pressure shall not exceed the SLs specified in Figure 2.1.1-1.

### 2.1.2 RCS Pressure SL

In MODES 1, 2, 3, 4, and 5, the RCS pressure shall be maintained ≤ 2735 psig.

## 2.2 SL Violations

2.2.1 If SL 2.1.1 is violated, restore compliance and be in MODE 3 within 1 hour.

2.2.2 If SL 2.1.2 is violated:

2.2.2.1 In MODE 1 or 2, restore compliance and be in MODE 3 within 1 hour.

2.2.2.2 In MODE 3, 4, or 5, restore compliance within 5 minutes.

## 3.3 STEAM GENERATOR (SG) SECONDARY SIDE PRESSURE/TEMPERATURE (P/T) LIMITS

TRMS 3.3 (CTS 3.1.2.2) The secondary side of the SGs shall be maintained within the P/T limits of Figure 3.3-1.

APPLICABILITY: At all times.

COMPENSATORY MEASURES

| CONDITION | REQUIRED COMPENSATORY ACTION | | COMPLETION TIME |
|---|---|---|---|
| A. Requirements of TRMS not met. | A.1 | Initiate action to restore SG secondary side P/T to within limits. | Immediately |
| | AND | | |
| | A.2 | Initiate a Condition Report in accordance with the Corrective Action Program. | Immediately |

TEST REQUIREMENTS

| TEST | FREQUENCY |
|---|---|
| None. | NA |

Figure 3.3-1 (Page 1 of 1)
Steam Generator P/T Limits

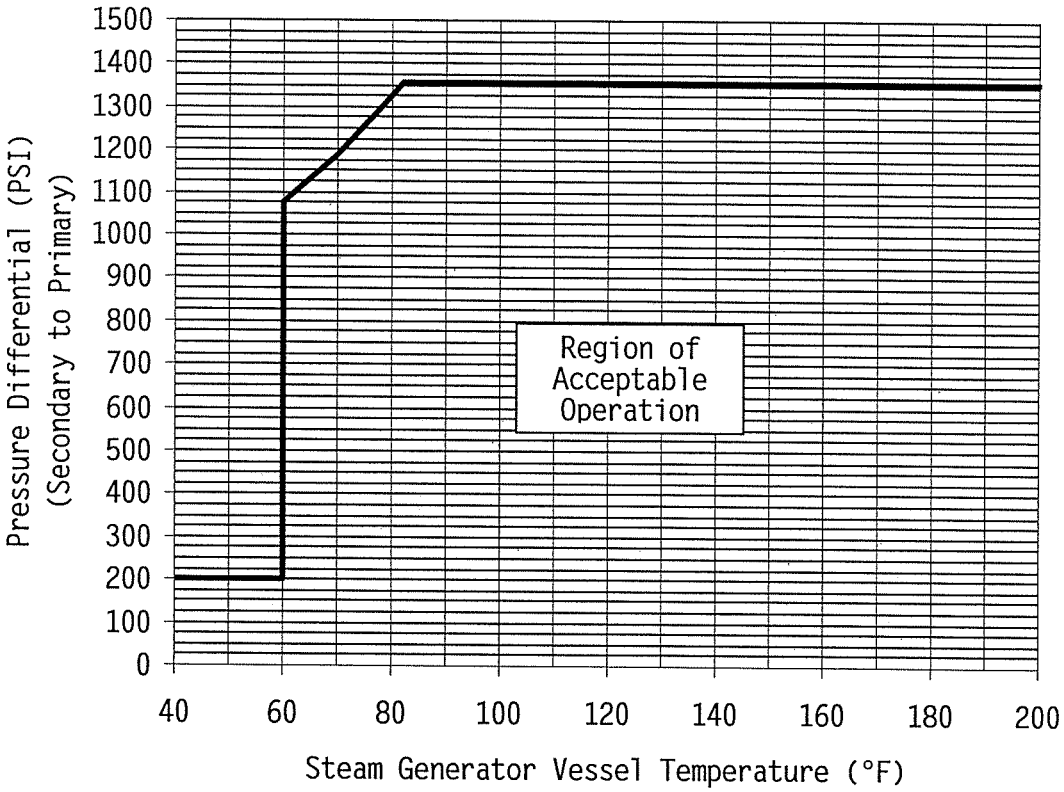

86. Given the following:

- The plant is in MODE 4 at 210 $^{o}$F and 350 PSIG.
- RCS is solid.
- RHR Pump "A" and RCP "C" are running.
- While swapping Charging Pumps, the operator inadvertently starts the Standby Charging Pump with the speed controller set at maximum.

Which ONE (1) of the following will occur to limit RCS pressure?

A. RHR-706, RHR SYSTEM RELIEF, will OPEN at 600 PSIG to relieve pressure to the PRT.
Enter AOP-019, MALFUNCTION OF RCS PRESSURE CONTROL.

B. RHR-706, RHR SYSTEM RELIEF, will OPEN at 600 PSIG to relieve pressure to the PRT.
Enter AOP-020, LOSS OF RESIDUAL HEAT REMOVAL (SHUTDOWN COOLING).

C. PCV-455C and PCV-456, PZR PORVs will OPEN at 400 PSIG to relieve pressure to the PRT.
Enter AOP-020, LOSS OF RESIDUAL HEAT REMOVAL (SHUTDOWN COOLING).

D. PCV-455C and PCV-456, PZR PORVs will OPEN at 400 PSIG to relieve pressure to the PRT.
Use APP-003-A2/A3, PCV-455C and PCV-456 LP PROT ACT/TROUB to direct operator actions.

007 A2.03 001/PRT/QUENCH TANK/2/1/3.6/3.9/SRO/HIGH/43.5/NEW - 2008/PZR-010

Given the following:

- The plant is in MODE 4 at 210 $^{o}$F and 350 PSIG.
- RCS is solid.
- RHR Pump "A" and RCP "C" are running.
- While swapping Charging Pumps, the operator inadvertently starts the Standby Charging Pump with the speed controller set at maximum.

Which ONE (1) of the following will occur to limit RCS pressure?

A. RHR-706, RHR SYSTEM RELIEF, will OPEN at 600 PSIG to relieve pressure to the PRT.
Enter AOP-019, MALFUNCTION OF RCS PRESSURE CONTROL.

B. RHR-706, RHR SYSTEM RELIEF, will OPEN at 600 PSIG to relieve pressure to the PRT.
Enter AOP-020, LOSS OF RESIDUAL HEAT REMOVAL (SHUTDOWN COOLING).

C. PCV-455C and PCV-456, PZR PORVs will OPEN at 400 PSIG to relieve pressure to the PRT.
Enter AOP-020, LOSS OF RESIDUAL HEAT REMOVAL (SHUTDOWN COOLING).

D. PCV-455C and PCV-456, PZR PORVs will OPEN at 400 PSIG to relieve pressure to the PRT.
Use APP-003-A2/A3, PCV-455C and PCV-456 LP PROT ACT/TROUB to direct operator actions.

The correct answer is D.

A: Incorrect - RHR-706 is set to OPEN at 600 PSIG. AOP-019 is applicable ONLY in MODES 1, 2 and 3.

B: Incorrect - RHR-706 is set to OPEN at 600 PSIG, but entry conditions will NOT be met for AOP-020 unless RHR inventory loss occurs. AOP-033 will be used for shutdown LOCA with the RCS greater than 200 $^{o}$F.

C: Incorrect - PZR PORVs are set at 400 PSIG during LTOP conditions. AAOP-033 will be used for shutdown LOCA with the RCS greater than 200 $^{o}$F.

D: Correct - LTOP will actuate the PZR PORVs at 400 PSIG. APP-003-A2/A3 is the correct procedure to use.

Exam Question Number: 86

Reference: APP-003-A2 and A3; AOP-019, Page 3; AOP-020, Page 3; SD-003, RHR, Figure 3.

KA Statement: Ability to (a) predict the impacts of the following malfunctions or operations on the P S; and (b) based on those predictions, use procedures to correct, control, or mitigate the consequences of those malfunctions or operations: Overpressurization of the PZR.

History: New - Written for HLC-08 NRC exam.

SRO - Requires evaluation of plant conditions and selection of the applicable procedure to mitigate the event.

| | | | |
|---|---|---|---|
| KA Name: | PRT/QUENCH TANK | Tier/Group: | 2/1 |
| Importance Rating: | 3.6/3.9 | RO/SRO Level: | SRO |
| Cognitive Level: | HIGH | 10CFR55.43 link: | 43.5 |
| Source: | NEW - 2008 | Learning Objective: | PZR-010 |

ALARM

PCV-455C LP PROT ACT/TROUB *** WILL REFLASH ***

AUTOMATIC ACTIONS

1. PCV-455C, PZR PORV, opens at 400 psig when in Low Pressure Mode

CAUSE

1. RCS overpressure condition.
2. Auctioneered low Tc less than 360°F **AND** LTOPP is **NOT** enabled.
3. RC-536, PORV BLOCK, Closed
4. RC-536, PRESSURIZER PORV PCV-455C BLOCK, Breaker Tripped/Open

OBSERVATIONS

1. RCS Pressure (PR-444, PI-500, PI-501, PI-403)
2. RCS Temperature (TR-410)
3. PRT Pressure (PI-472), Temperature (TI-471), & Level (LI-470)
4. RC-536 Position indication
5. Position of RHR-759A, RHR HX "A" DISCHARGE and RHR-759B, RHR HX "B" DISCHARGE

ACTIONS

1. Stop pressure increasing activities.
2. **IF** required, **THEN** turn the LTOPP System OVERPRESSURE PROTECTION Switches to LOW PRESSURE.
3. **IF** required, **THEN** OPEN RC-536.
4. **IF** RCS is solid, **THEN** verify BOTH RHR HX "A" **AND** "B" DISCHARGE OPEN:
   1) RHR-759A
   2) RHR-759B
5. **IF** required, **THEN** dispatch operator to check Breaker Position of RC-536, PRESSURIZER PORV PCV-455C BLOCK.
6. **IF** tripped, **THEN** investigate the cause of trip.

ALARM

PCV-455C LP PROT ACT/TROUB (Continued)

DEVICE/SETPOINTS

1. TE-410, TE-420, or TE-430 / 360°F
2. RC-536 limit switch
3. QM-503 / 400 psig / variable (If auctioneered low Tc is greater than 360°F)

POSSIBLE PLANT EFFECTS

1. Low RCS pressure
2. Failure of LTOPP to actuate when required

REFERENCES

1. ITS LCO 3.4.12, LCO 3.4.3, LCO 3.4.11
2. CWD B-190628, Sheet 120, Cables J and M
3. Hagan Wiring Diagram HBR2-8608 D82

ALARM

PCV-456 LP PROT ACT/TROUB *** WILL REFLASH ***

AUTOMATIC ACTIONS

1. PCV-456, PZR PORV, opens at 400 psig when in Low Pressure Mode

CAUSE

1. RCS overpressure condition.
2. Auctioneered low Tc less than 360°F **AND** LTOPP is **NOT** enabled.
3. RC-535, PORV BLOCK, Closed
4. RC-535, PRESSURIZER PORV PCV-456 BLOCK Breaker Tripped/Open

OBSERVATIONS

1. RCS Pressure (PR-444, PI-500, PI-501, PI-403)
2. RCS Temperature (TR-410)
3. PRT Pressure (PI-472), Temperature (TI-471), & Level (LI-470)
4. RC-535 Position indication
5. Position of RHR-759A, RHR HX "A" DISCHARGE and RHR-759B, RHR HX "B" DISCHARGE

ACTIONS

1. Stop pressure increasing activities.
2. **IF** required, **THEN** turn the LTOPP System OVERPRESSURE PROTECTION Switches to LOW PRESSURE.
3. **IF** required, **THEN** OPEN RC-535.
4. **IF** RCS solid, **THEN** verify RHR HX "A" and "B" DISCHARGE OPEN:
   1) RHR-759A
   2) RHR-759B
5. **IF** required, **THEN** dispatch operator to check Breaker Position of RC-535, PRESSURIZER PORV PCV-456 BLOCK.
6. **IF** tripped, **THEN** investigate the cause of trip.

ALARM

PCV-456 LP PROT ACT/TROUB (Continued)

DEVICE/SETPOINTS

1. TE-410, TE-420, or TE-430 / 360°F
2. RC-535 limit switch
3. QM-503 / 400 psig / variable (If auctioneered low Tc is greater than 360°F)

POSSIBLE PLANT EFFECTS

1. Low RCS pressure
2. Failure of LTOPP to actuate when required

REFERENCES

1. ITS LCO 3.4.12, LCO 3.4.3, LCO 3.4.11
2. CWD B-190628, Sheet 119, Cables J and M
3. Hagan Wiring Diagram HBR2-8608 D82

## Purpose and Entry Conditions

(Page 1 of 1)

1. PURPOSE

   This procedure provides instructions in the event RCS pressure is higher OR lower than required for current plant conditions.

   This procedure is applicable in Modes 1, 2, and 3.

2. ENTRY CONDITIONS

   This procedure may be entered when RCS pressure deviates from the desired control band due to a fault in pressure control components. (AOP-025 covers Instrument Failure)

- END -

| STEP | INSTRUCTIONS | RESPONSE NOT OBTAINED |
|---|---|---|

1. PURPOSE

This procedure provides the instructions necessary to mitigate the loss of RHR in all conditions for which RHR can be aligned to provide shutdown cooling. This includes loss of RHR cooling for reasons such as RCS leakage, loss of power, loss of Service Water or Component Cooling Water, RHR pump cavitation, and inadequate RHR flow or abnormal reductions in RHR cooling.

This procedure is applicable in Modes 4, 5, and 6 when fuel is in the vessel.

2. ENTRY CONDITIONS

Direct entry from any condition resulting in a loss of RHR pump(s), RHR pump cavitation, abnormal RHR flow or temperature control, or excessive loss of RCS inventory while RHR is aligned for shutdown cooling.

As directed by the following other procedures:

- AOP-005, Radiation Monitoring System, when a low level in the SFP exists due to an RCS leak with the SFP GATE VALVE open.
- AOP-014, Component Cooling Water System Malfunction, resulting in stopping of the RHR Pumps while in CSD.
- AOP-016, Excessive Primary Plant Leakage, if less than 200°F and leakage exceeds Charging Capacity.
- AOP-017, Loss Of Instrument Air, if the loss of Instrument Air has affected core cooling while on RHR.

- END -

# COLD LEG RECIRC - RHR FLOW >1200 GPM, RCS<125 PSIG

RHR-FIGURE-3

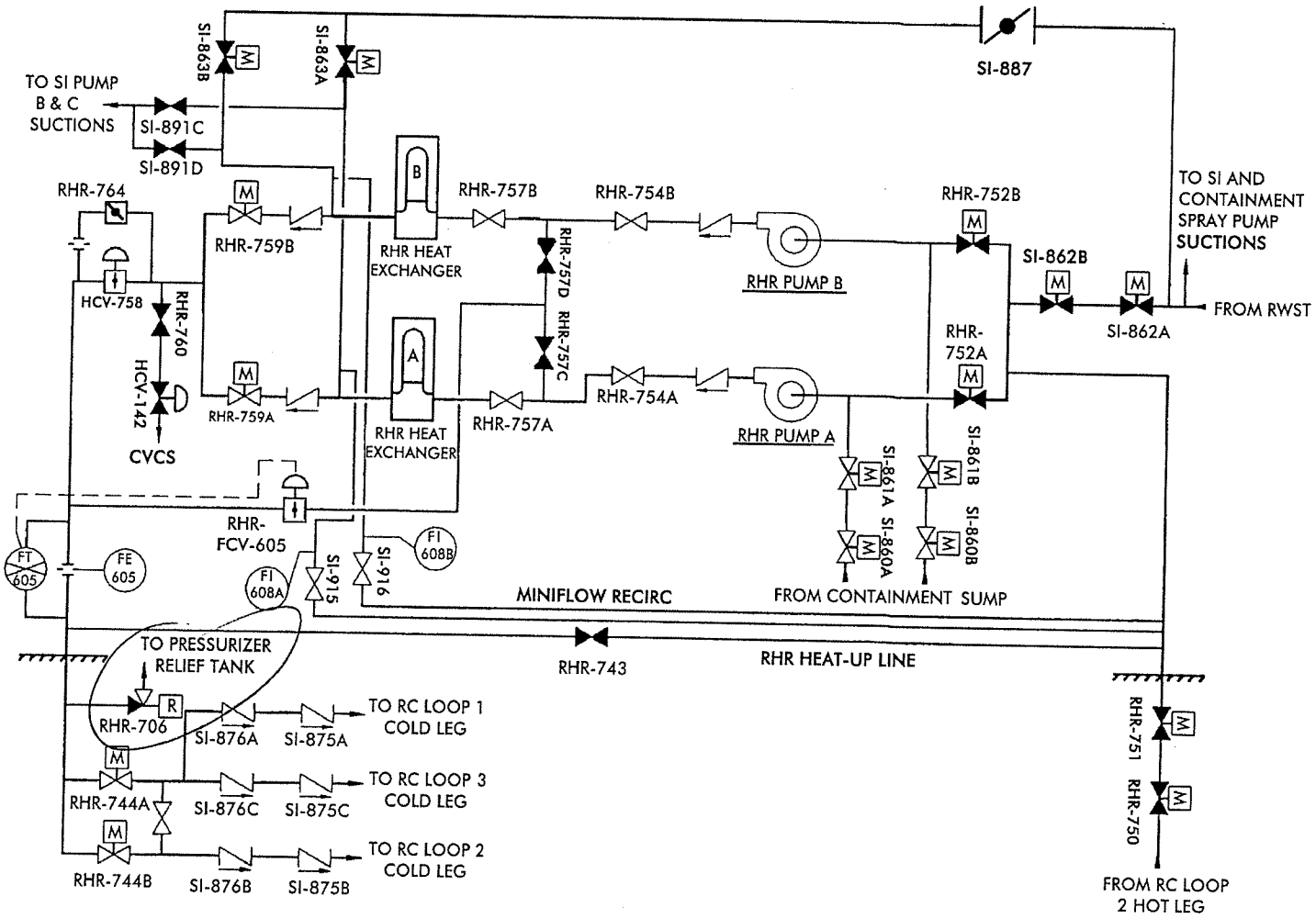


***INFORMATION USE ONLY***

87. Given the following:

- The plant is in MODE 3.
- RCS heatup and pressurization is in progress.
- RCS temperature is 511 $^{o}$F.
- RCS pressure is 2100 PSIG.
- ONE (1) safety valve on S/G "A" fails partially OPEN. When it reseats, the following conditions exist:
  - RCS temperature stabilized at 492 $^{o}$F.
  - RCS pressure stabilized at 1700 PSIG.
  - S/Gs "B" and "C" pressures stabilized at 640 PSIG.
  - S/G "A" pressure is 520 PSIG and slowly increasing.

Which ONE (1) of the following describes the actions required?

A. Stabilize plant parameters. Allow S/G pressures to equalize prior to raising RCS pressure above 2000 PSIG.

B. Stabilize plant parameters. Commence RCS cooldown and depressurization to place the plant in an operational MODE where the safety valve is NOT required.

C. Initiate Main Steam Line Isolation. Commence RCS cooldown and depressurization to place the plant in an operational MODE where the safety valve is NOT required.

D. Initiate Safety Injection. Go to PATH-1.

013 G2.1.7 001/ESFAS/2/1/4.4/4.7/SRO/HIGH/43.5/SALEM - 2001/ESF-006

Given the following:

- The plant is in MODE 3.
- RCS heatup and pressurization is in progress.
- RCS temperature is 511 $^{o}$F.
- RCS pressure is 2100 PSIG.
- ONE (1) safety valve on S/G "A" fails partially OPEN. When it reseats, the following conditions exist:
  - RCS temperature stabilized at 492 $^{o}$F.
  - RCS pressure stabilized at 1700 PSIG.
  - S/Gs "B" and "C" pressures stabilized at 640 PSIG.
  - S/G "A" pressure is 520 PSIG and slowly increasing.

Which ONE (1) of the following describes the actions required?

A. Stabilize plant parameters. Allow S/G pressures to equalize prior to raising RCS pressure above 2000 PSIG.

B. Stabilize plant parameters. Commence RCS cooldown and depressurization to place the plant in an operational MODE where the safety valve is NOT required.

C. Initiate Main Steam Line Isolation. Commence RCS cooldown and depressurization to place the plant in an operational MODE where the safety valve is NOT required.

D. Initiate Safety Injection. Go to PATH-1.

The correct answer is D.

A: Incorrect - Allowing S/G pressures to equalize is appropriate but SI needs to be initiated due to plant conditions.

B: Incorrect - LCO action statement allows Safety Valve to be inoperable for a limited time prior to changing MODES.

C: Incorrect - Main Steam Line Isolation does NOT isolate the Main Steam Line Safety Valves.

D: Correct - >100 PSID will result in Steamline Delta P SI and PZR Pressure SI should have occurred at 1715 PSIG. Since NO SI actuation has occurred, the SRO should direct SI initiation, and direct entry to the appropriate procedure (PATH-1).

Exam Question Number: 87

Reference: SD-006, ESF, Pages 12 and 26, Figure 3; GP-007, Page 25, OMM-022, Page 31.

KA Statement: Ability to evaluate plant performance and make operational judgments based on operating characteristics, reactor behavior and instrumentation interpretation.

History:

SRO - The SRO must determine plant status, the fact that no actuations have occurred but should have, and that PATH-1 still applies in MODE 3.

| | | | |
|---|---|---|---|
| KA Name: | ESFAS | Tier/Group: | 2/1 |
| Importance Rating: | 4.4/4.7 | RO/SRO Level: | SRO |
| Cognitive Level: | HIGH | 10CFR55.43 link: | 43.5 |
| Source: | SALEM - 2001 | Learning Objective: | ESF-006 |

4.1.2 Reactor Coolant Temperature (ESF-Figure-1)

The RCS Low Tavg signal (2 of 3 channels below 543°F) is used to initiate the Safety Injection signal, when coincident with high steam flow; and close the Main Steam Isolation Valves, when coincident with high steam flow (i.e., generate the Steam Line Isolation Signal).

4.1.3 Steam Flow (ESF-Figure-1)

Hi Steam Flow (37.25% flow at no load to 20% load, increases linearly to 109% at full load) detected by at least one sensor on two of three steam lines, coincident with low Tavg (543°F) or low steam line pressure (614 psig), generates a Safety Injection signal and closes all MSIVs. Two flow controllers on each steam line are used to sense high steam line flow. This circuit is designed to detect steam line breaks downstream of the MSIVs.

4.1.4 Steam Line Pressure (ESF-Figure-1 & 3)

Steam Line Pressure measurement is utilized for steam line break protection. Low steam line pressure (614 psig) in two of three main steam lines or Low Tavg (543°F) in two of three loops, coincident with high steam line flow in two-of-three main steam lines, will initiate the Steam Line Isolation and Safety Injection signals. This is to protect against: a steam line break downstream of the main steam check valves, a feed line break, and/or an inadvertent opening of a SG safety.

In addition, each steam line pressure measurement is compared with a main steam header pressure measurement to determine if a high steam line differential pressure exists. A coincidence of two-of-three steam line differential pressures (100 psid) in any one steam line, that is, steam line pressure lower than main steam header pressure, will initiate a Safety Injection signal.

The steam header pressure is electronically limited to a minimum value of 585 psig. Therefore, this SI signal must be blocked before a plant cooldown is started to prevent SI actuation when S/G pressures drop below 485 psig(approximately 467°F). The steam line differential pressure circuit detects faults upstream of the MSIVs. Since the steam line check valves prevent reverse flow to the faulted S/G, excessive steam line differential pressure does not close the MSIVs.

4.1.5 Containment Pressure (ESF-Figure-4 & 5)

Containment Pressure measurement is utilized to initiate Emergency Core Cooling in response to a Loss of Coolant Accident (LOCA), and to provide containment pressure



INFORMATION USE ONLY

Low pressurizer pressure and high steam line differential pressure can be blocked (provided pressurizer pressure is <2000 psig on 2/3 channels) and unblocked using a three position (BLOCK, unmarked (mid position), UNBLOCK) switch located on the RTGB. These SI initiation signals are normally blocked during a plant cooldown when pressurizer pressure is less than 1950 psig. These signals will be automatically unblocked when pressurizer pressure is increased to 2000 psig. These signals can also be unblocked with a switch on the RTGB. Before these signals are manually or automatically unblocked, the operator should check to see if the bistables for these signals are cleared.

6.5.2 High Steam Line Flow Coincident with Low Steam Line Pressure or Low Tavg

High steam line flow coincident with low steam line pressure or low $T_{avg}$ and the Hi-Hi CV pressure SI signal can be blocked (provided that Tavg is <543°F on 2/3 channels) and unblocked using a three position (BLOCK, unmarked (mid position), UNBLOCK) switch on the RTGB. This signal is automatically unblocked when $T_{avg}$ reaches 543°F or can be manually unblocked with the switch on the RTGB. Before these signals are manually or automatically unblocked, the operator should check to see if the bistables for these signals are cleared.

## 7.0 TECHNICAL SPECIFICATIONS

ITS 3.3.2 Engineered Safety Feature Actuation System Instrumentation

ITS 3.3.5 Loss of Power Diesel Generator Start Instrumentation

ITS 3.3.6 Containment Ventilation Isolation Instrumentation

ITS 3.3.7 Control Room Emergency Filtration System Actuation Instrumentation

## 8.0 OPERATIONAL EVENTS

8.1 Commitments

NONE

8.2 Plant Specific Events (Non-commitments)

8.2.1 **LER 88-026**, Inadvertent Safeguard Actuation
Brief Description of the Event:

Miscommunication resulted in SI actuation during preparation for a plant modification.



*INFORMATION USE ONLY*

# HIGH STEAM LINE DIFFERENTIAL PRESSURE

ESF-FIGURE-3

## High Steam Line Differential Pressure

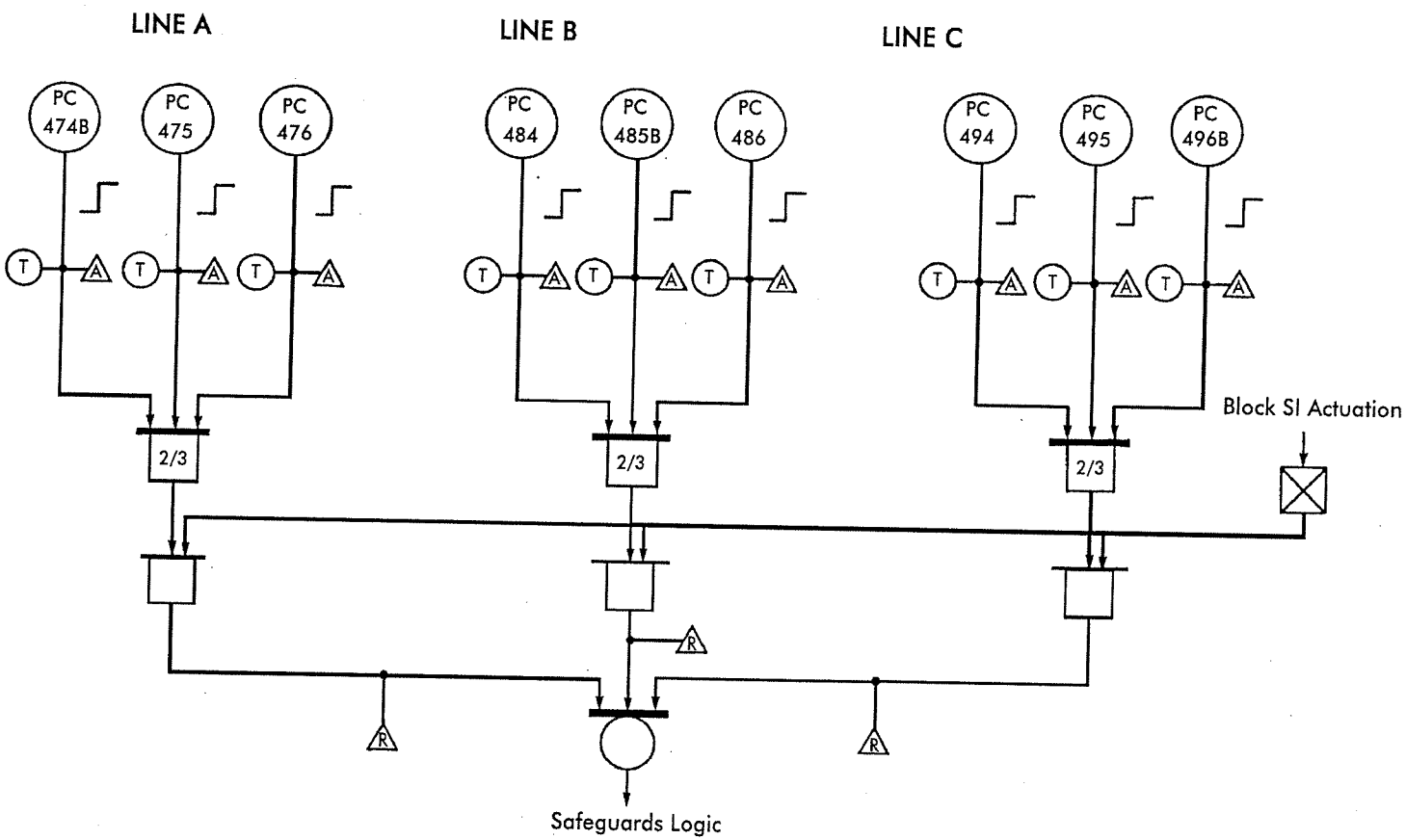


***INFORMATION USE ONLY***

INIT

**NOTE:** Adjusting PC-444J setpoint potentiometer to 0.0 will reduce RCS pressure to 1700 psig. PC-444J controller setpoint shall be adjusted SLOWLY to minimize the potential for causing a PZR insurge. An insurge could occur if PC-444J setpoint is adjusted too quickly.

The PZR cooldown rate shall be less than or equal to 200°F/hr. The PZR heatup rate shall be less than or equal to 100°F/hr. (TRMS 3.4)

The following is a continuous action step and shall be performed when conditions require.

3. **IF** PZR Surge line temperature decreases **AND** is not due to the normal temperature decrease associated with depressurization, **THEN** stop adjusting PC-444J setpoint until PZR Surge Line temperature is increasing. ____

4. Slowly adjust PC-444J, PZR PRESS 444J, controller setpoint potentiometer to 0.0 without exceeding 200°F/hr cooldown rate on the PZR **AND** continue with this procedure. ____

**CAUTION**

To prevent an SI Actuation, steam line pressure shall not be allowed to drop below 485 psig prior to blocking the HI STM LINE DP SI Signal.

The PZR PRESS/HI STM LINE DP SI Signal will automatically unblock if RCS pressure increases above 2000 psig. If this occurs, the signal should be blocked when RCS pressure decreases below 2000 psig.

8.2.16 **WHEN** RCS pressure is less than 2000 psig, **THEN** perform the following:

1. Display the following ERFIS points: (ACR 93-00023)

   - RCP0496D, LO PRESS SI BLOCK TRAIN "A" ____
   - RCP0497D, LO PRESS SI BLOCK TRAIN "B" ____

8.3.3 Automatic Actions/Actuations{ TC "Automatic Actions/Actuations" \f C \l "3" } (RAIL 94R0928)

1. During the course of an event, should the setpoint for an automatic protective system actuation be approached, the Operator should, if possible, manually initiate the actuation prior to the automatic actuation. If immediate actions are in progress they should be completed prior to initiating the signal, however this is not considered performance of steps early or out of order.

   Example: During an RCS leakage transient, after entry to the EOP Network, pressure is slowly decreasing and after observing the trend in RCS pressure it is apparent that RCS makeup can not keep up with leakage. As pressure approaches the low pressure SI setpoint of 1715 psig, the Operator should manually initiate Safety Injection prior to reaching the setpoint.

2. If the setpoint for an automatic actuation signal is reached and the actuation fails to occur, the Operator should manually initiate the signal. (SOER 93-1, Rec 2)

   Example: During the scenario described above, the Operator notes that pressure has reached 1700 psig and a Safety Injection actuation has not occurred, the Operator should immediately initiate the Safety Injection.

   Example: If an MSIV does not automatically close from a valid signal and the RTGB control switch does not operate, then depressing the Steam Line Isolation pushbutton for that MSIV should be performed.

   Example: If a CV Ventilation Isolation should have occurred, then depressing the HIGH VOLTS OFF on R-11 or R-12 may be successful.

SALEM FOXTROT
2001 NRC WRITTEN EXAMINATION
WORKSHEET

| | |
|---|---|
| Question Number: | SRO 86 |
| Question: | Unit 2 is in MODE 3 during a plant startup. RCS heatup and pressurization is in progress.<br>• Tave is 511 deg F<br>• RCS pressure is 1850 psig<br>One safety valve on 22 SG fails partially open. When it is reseated, the following conditions exist:<br>• Tave is 492 deg F<br>• RCS pressure is 1700 psig<br>• 21, 23, 24 SGs are 640 psig<br>• 22 SG is 520 psig<br>• All parameters are STABLE<br><br>Which one of the following describes all of the actions required?<br><br>A. Stabilize plant parameters. Restore OPERABILITY of the affected safety valve and allow SG pressures to equalize prior to raising RCS pressure above the P-11 setpoint<br>B. Stabilize plant parameters. Commence RCS cooldown and depressurization to place the plant in an operational MODE where the safety valve is not required<br>C. Initiate Main Steam Line Isolation. Commence RCS cooldown and depressurization to place the plant in an operational MODE where the safety valve is not required<br>D. Initiate Safety Injection and Main Steam Line Isolation. Go to EOP-TRIP-1, REACTOR TRIP OR SAFETY INJECTION |
| Answer: | D |
| Justification: | 120 psid will result in streamline Delta P SI and MSLI. Since no actuations have occurred, the SRO should direct initiations, and direct entry to the appropriate procedure. (TRIP-1). |
| Tier/Group | 1/1 |
| 10CFR55.41<br>10CFR55.43 | **43.5 because the SRO must determine plant status, the fact that no actuations have occurred but should have, and that TRIP-1 still applies in MODE 3** |
| Bank/New/ Modified | New |
| K/A #: | 040AA2.04 Ability to determine or interpret conditions requiring ESFAS initiation |
| K/A Values: | 4.7 |
| Cognitive Level: | Analysis |
| References: | NOS05FLUNCY-00, Objective 2.c and 2.k LP PROCED02, Obj 4 |

88. The cavitating venturi is designed to limit maximum flow from the SDAFW Pump to a faulted S/G to less than 630 GPM.....

A. to prevent water hammer on the S/G feed ring.

B. to ensure adequate NPSH is available to MDAFW Pumps.

C. to ensure that RCS cooldown rates are NOT exceeded.

D. to prevent SDAFW Pump runout during low S/G pressure conditions.

061 G2.1.27 001/AFW/2/1/3.9/4.0/SRO/LOW/43.1/NEW - 2008/AFW-002

The cavitating venturi is designed to limit maximum flow from the SDAFW Pump to a faulted S/G to less than 630 GPM.....

A. to prevent water hammer on the S/G feed ring.

B. to ensure adequate NPSH is available to MDAFW Pumps.

C. to ensure that RCS cooldown rates are NOT exceeded.

D. to prevent SDAFW Pump runout during low S/G pressure conditions.

The correct answer is D.

A: Incorrect - S/G is already hot and SDAFW Pump flow is less than original flow from feedwater system. Inverted J tubes on the feed ring aid in preventing water hammer.

B: Incorrect - The SD and MDAFW Pumps do have a combined suction line, however SDAFW Pump flow will NOT impact MDAFW Pump NPSH due to the size of the combined suction line.

C: Incorrect - The faulted S/G has caused excessive RCS Cooldown, limiting SDAFW Pump flow will maintain the SDAFW Pump available for service.

D: Correct - The SDAFW Pump may experience pump runout if a faulted S/G is at a low pressure and flow is NOT limited by the venturi.

Exam Question Number: 88

Reference: USFAR, Section 10.4.8-1.

KA Statement: Knowledge of system purpose and/or function.

History: New - Written for HLC-08 NRC Exam.

SRO - understanding conditions of the facility license.

| | | | |
|---|---|---|---|
| KA Name: | AFW | Tier/Group: | 2/1 |
| Importance Rating: | 3.9/4.0 | RO/SRO Level: | SRO |
| Cognitive Level: | LOW | 10CFR55.43 link: | 43.1 |
| Source: | NEW - 2008 | Learning Objective: | AFW-002 |

## 10.4.8 Auxiliary Feedwater System

### 10.4.8.1 Design Basis

The design parameters for the auxiliary feedwater system components are shown on Table 10.4.8-1. The auxiliary feedwater system is designed and constructed in accordance with the Seismic Class I requirements presented in Section 3.2.

### 10.4.8.2 System Description

The flow diagram for the auxiliary feedwater system is included with the condensate and feedwater flow diagram Figures 10.1.0-4, 10.1.0-5, and 10.1.0-6.

The auxiliary feedwater system can provide feedwater to the steam generators from any one or combination of three auxiliary feedwater (AFW) pumps, two are motor driven pumps and the third is steam driven.

Two motor driven auxiliary feedwater pumps are supplied power from the emergency busses E-1 and E-2. The emergency busses also supply power to the motor driven auxiliary feedwater pump's discharge isolation valves and the steam driven auxiliary feedwater pump's steam supply and feedwater discharge isolation valves. The emergency busses are supplied power either from offsite or plant diesel generators. The steam driven auxiliary feedwater pump can be operated independent of electrical power where steam produced from decay heat drives the turbine. The auxiliary feedwater pumps supply feedwater to the steam generators for decay heat removal if main feedwater is not available or steam generator level is not adequate, as described below. The auxiliary feedwater pumps can be used to fill the steam generators under any plant condition, except that the steam driven auxiliary feedwater pump requires the plant to be heated up above 350°F, and the motor driven AFW pumps require power.

Upon receipt of an auto start signal to the steam driven auxiliary feedwater pump, the steam supply valves will open supplying steam to drive the turbine-pump. At the same time, the feedwater discharge valves open to the steam generators. The turbine-pump builds up speed and supplies feedwater to the steam generators.

A cavitating venturi is located in the discharge piping of the steam driven auxiliary feedwater pump. Its function is to prevent excess flow from the pump into a low pressure steam generator in the case of a failed discharge flow control valve. This prevents excess mass/flow into containment during a main steamline break and prevents steam driven auxiliary feedwater pump runout.

Upon receipt of an auto start signal to the motor driven auxiliary feedwater pumps, the feedwater discharge valves open while the motor is accelerating up to speed and supplies feedwater to the steam generators.

The motor driven auxiliary feedwater pumps are supplied with bearing cooling water from the service water system. The SDAFW pump is self-cooled using water from the CST.

The capacity of the steam driven auxiliary feedwater pump is based on preventing the water level in the steam generators from receding below the lowest level within the indicated level range in the event of a loss of offsite power. This will prevent the tube sheet from being uncovered. A signal indicating a low low steam generator water level in any two steam generators or a direct signal of undervoltage on 4160 buses 1 and 4 will automatically start the steam driven AFW pump by opening steam admission valves and auxiliary feedwater discharge valves to individual steam generators. The initiating signals for starting the motor driven AFW pumps

89. Given the following:

- Instrument Air Compressor "D" is tagged out for maintenance.
- The Primary Air Compressor (PAC) is running.
- Oil intrusion has plugged the PAC Air Dryer.
- IA header pressure is at 75 PSIG and decreasing.

Which ONE (1) of the following is the required procedural action IAW AOP-017, LOSS OF INSTRUMENT AIR?

A. SHUT IA-47, TURBINE BUILDING ISOLATION to reduce air loss.

B. OPEN IA-662, IA BACK-UP CV QCV-10374 ISOLATION Valve to cross-connect Condensate Polishing Air with IA.

C. OPEN IA-3859, PAC DRYER BYPASS.

D. Verify the Station Air Compressor is running and OPEN SA-220 and 221, STATION AIR TO INSTRUMENT AIR CROSS-CONNECT.

078 A2.01 001/INSTRUMENT AIR/2/1/2.4/2.9/SRO/HIGH/43.5/NEW - 2008/AOP-017-006

Given the following:

- Instrument Air Compressor "D" is tagged out for maintenance.
- The Primary Air Compressor (PAC) is running.
- Oil intrusion has plugged the PAC Air Dryer.
- IA header pressure is at 75 PSIG and decreasing.

Which ONE (1) of the following is the required procedural action IAW AOP-017, LOSS OF INSTRUMENT AIR?

A. SHUT IA-47, TURBINE BUILDING ISOLATION to reduce air loss.

B. OPEN IA-662, IA BACK-UP CV QCV-10374 ISOLATION Valve to cross-connect Condensate Polishing Air with IA.

C. OPEN IA-3859, PAC DRYER BYPASS.

D. Verify the Station Air Compressor is running and OPEN SA-220 and 221, STATION AIR TO INSTRUMENT AIR CROSS-CONNECT.

The correct answer is D.

A: Incorrect - Shutting IA-47 will isolate ALL IA to the Turbine Building, and is NOT an action IAW AOP-017.

B: Incorrect - The Condensate Polishing Air system is normally cross-connected to IA, this valve is normally OPEN and is closed to separate the systems during AOP-017 actions.

C: Incorrect - NO AOP-017 guidance exists for opening the PAC dryer bypass.

D: Correct - As the first attempt to maintain IA header pressure, AOP-017 actions cross-connect SA to IA.

Exam Question Number: 89

Reference: AOP-017, Pages 4 and 5; SD-017, Instrument Air, Figures 1 and 4.

KA Statement: Ability to (a) predict the impacts of the following malfunctions or operations on the IAS; and (b) based on those predictions, use procedures to correct, control, or mitigate the consequences of those malfunctions or operations: Air dryer and filter malfunctions.

History: New - Written for HLC-08 NRC Exam.

SRO - Requires evaluation of plant conditions and selection of appropriate actions IAW station procedures.

| | | | |
|---|---|---|---|
| KA Name: | INSTRUMENT AIR | Tier/Group: | 2/1 |
| Importance Rating: | 2.4/2.9 | RO/SRO Level: | SRO |
| Cognitive Level: | HIGH | 10CFR55.43 link: | 43.5 |
| Source: | NEW - 2008 | Learning Objective: | AOP-017-006 |

| STEP | INSTRUCTIONS | RESPONSE NOT OBTAINED |
|---|---|---|
| 1. | Check Plant Status - MODE 1 <u>OR</u> MODE 2 | Go To Step 4. |
| * 2. | Check IA Header Pressure - LESS THAN 60 PSIG | <u>IF</u> IA pressure decreases to less than 60 psig, <u>THEN</u> Go To Step 3.<br><br>Go To Step 4. |
| 3. | Perform The Following:<br><br>a. Trip the Reactor<br><br>b. Go To PATH-1, while continuing with this procedure | |
| 4. | Verify Instrument Air Compressor D - RUNNING | |
| 5. | Verify The Primary Air Compressor - RUNNING | |
| * 6. | Check IA Header Pressure - LESS THAN 80 PSIG | <u>IF</u> IA pressure decreases to less than 80 psig, <u>THEN</u> observe <u>NOTE</u> prior to Steps 7 and 8 and perform Steps 7 and 8.<br><br>Observe the <u>NOTE</u> Prior To Step 9 and Go To Step 9. |

| STEP | INSTRUCTIONS | RESPONSE NOT OBTAINED |
|---|---|---|
| | **NOTE**<br><br>IA-3821 is located on IA Dryer D. | |
| 7. | Dispatch Operator(s) To Perform The Following: | |
| | a. Verify Station Air Compressor - IN SERVICE WITH DISCHARGE VALVE OPEN | a. Go To Step 7.c. |
| | b. Verify the following SA TO IA CROSS CONNECT BYPASS FILTER ISOLATION Valves - OPEN:<br>• SA-220<br>• SA-221 | b. Open SA-5, STATION AIR TO INST AIR CROSS CONNECT. |
| | c. Verify IA-18, AIR DRYER "A" & "B" BYPASS - OPEN | |
| | d. Verify the following Compressors - RUNNING<br>• STATION AIR COMP<br>• INST AIR COMP A<br>• INST AIR COMP B | |
| | e. Check FCV-1740, AIR DRYER HIGH DP FLOW CONTROL Valve - OPEN | e. Open IA-3665, AIR DRYER "A" & "B" BYPASS. |
| | f. Open IA-3821, INSTRUMENT AIR DRYER "D" BYPASS | |

IA A& B COMPRESSOR PACKAGE
AIR-FIGURE-1

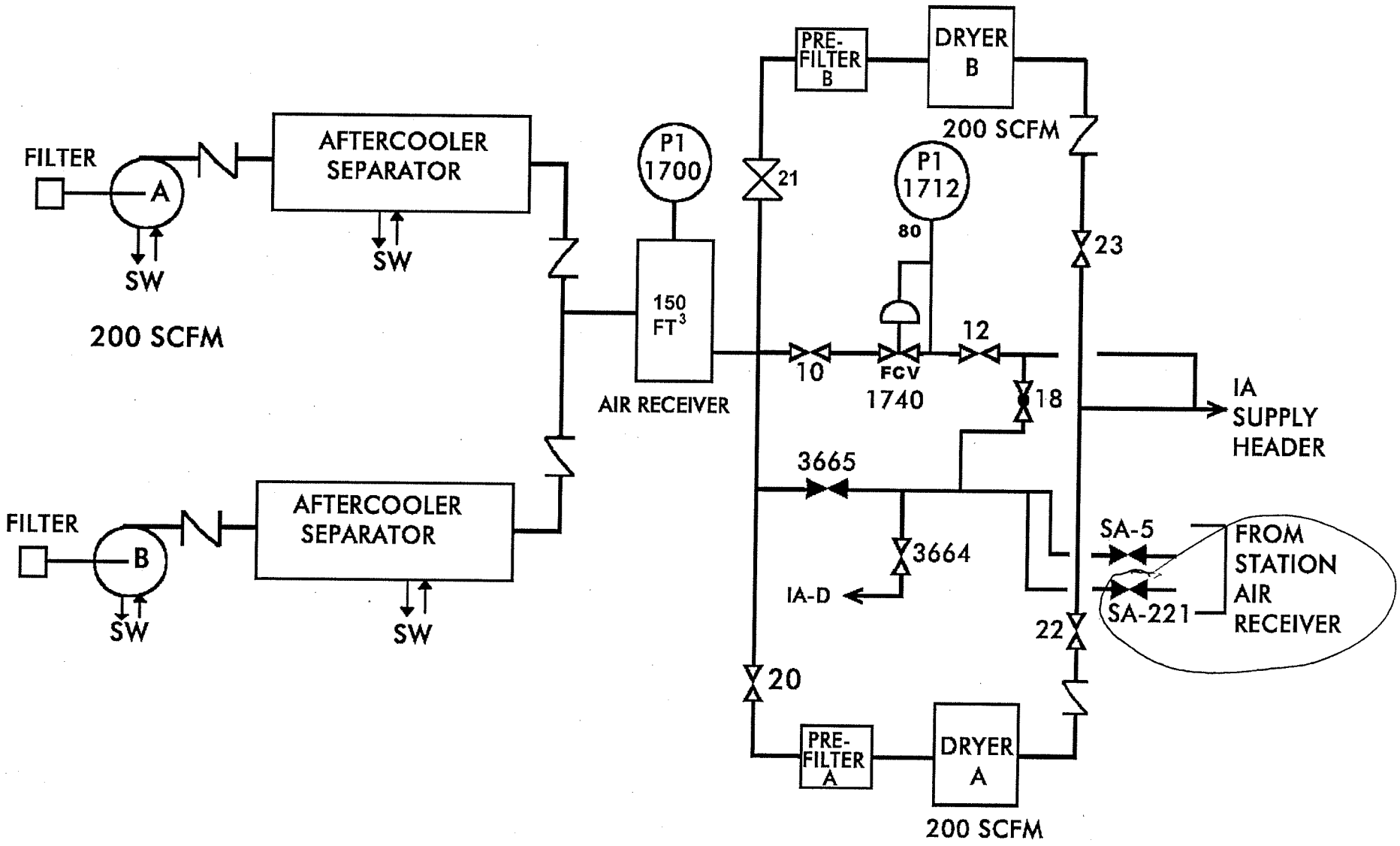


*INFORMATION USE ONLY*

STATION AIR COMPRESSOR PACKAGE

AIR-FIGURE-4

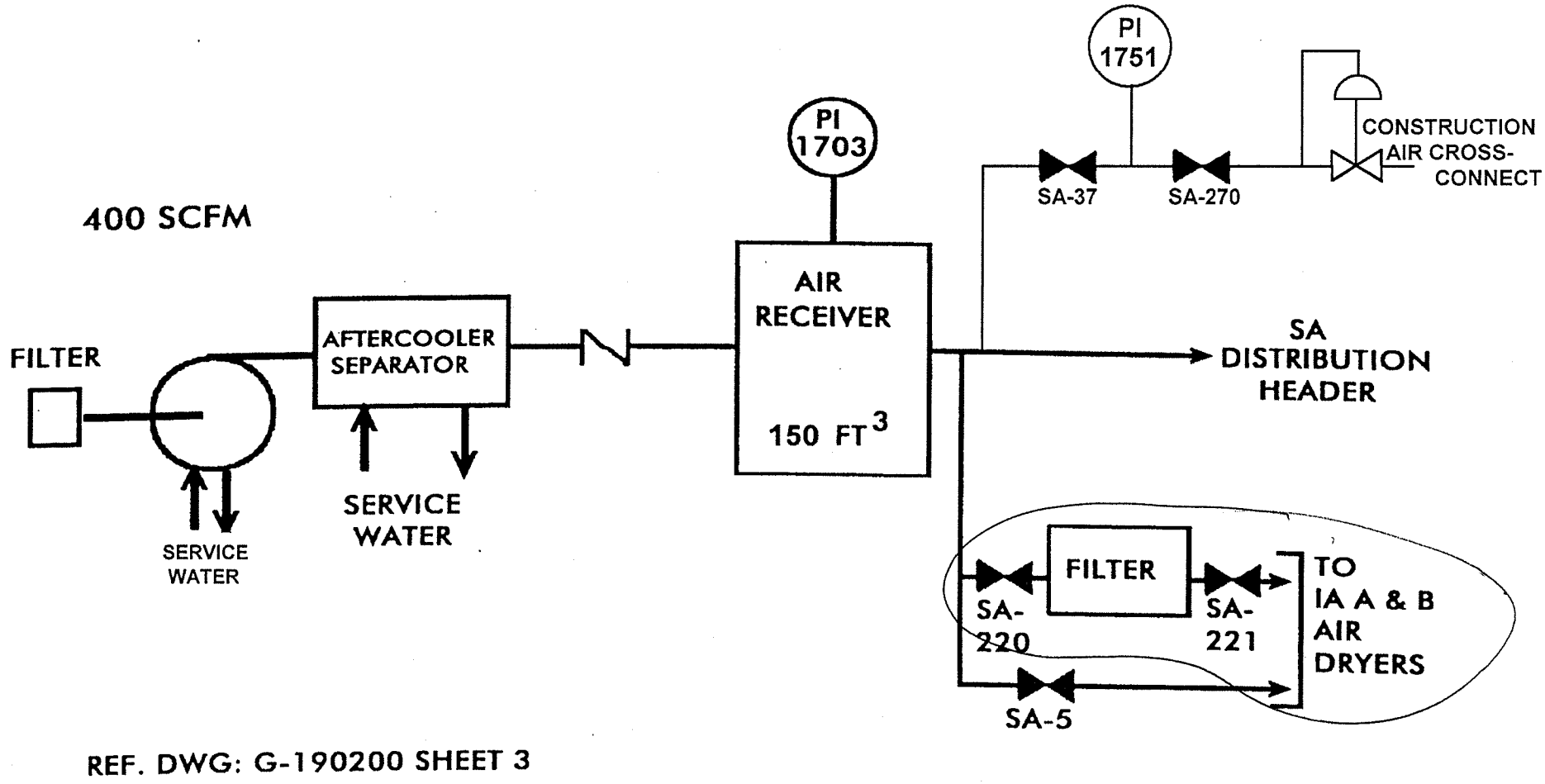


REF. DWG: G-190200 SHEET 3

*INFORMATION USE ONLY*

90. Given the following:

- The plant is operating at 50% RTP.
- Power ascension in progress IAW GP-005, POWER OPERATION, following a refueling outage.
- During paperwork reviews, Maintenance Supervision has discovered that the blind flange on the Refueling Transfer Tube was installed but has NOT been properly torqued.
- The Containment has been declared INOPERABLE and the plant must be placed in MODE 3 within 6 hours.

Which ONE (1) of the following is the required Notification to be made to agencies or organizations outside of the RNP organization?

A. Load dispatcher must be notified of LCO condition that affects the unit output.

B. State and County Emergency Operation Centers must be notified of a potential breach of Containment that may impact off-site doses in the event of an RCS leak.

C. NRC Operations Center must be notified PRIOR to initiation of any Tech Spec required shutdown.

D. American Nuclear Insurers (ANI) must be notified of a breach of the Primary Reactor Containment.

103 G2.4.20 001/CONTAINMENT/2/1/2.7/4.1/SRO/LOW/43.5/NEW - 2008/OMM-007-002

Given the following:

- The plant is operating at 50% RTP.
- Power ascension in progress IAW GP-005, POWER OPERATION, following a refueling outage.
- During paperwork reviews, Maintenance Supervision has discovered that the blind flange on the Refueling Transfer Tube was installed but has NOT been properly torqued.
- The Containment has been declared INOPERABLE and the plant must be placed in MODE 3 within 6 hours.

Which ONE (1) of the following is the required Notification to be made to agencies or organizations outside of the RNP organization?

A. Load dispatcher must be notified of LCO condition that affects the unit output.

B. State and County Emergency Operation Centers must be notified of a potential breach of Containment that may impact off-site doses in the event of an RCS leak.

C. NRC Operations Center must be notified PRIOR to initiation of any Tech Spec required shutdown.

D. American Nuclear Insurers (ANI) must be notified of a breach of the Primary Reactor Containment.

The correct answer is A.

A: Correct - OMM-007 requires that load dispatcher be notified of any LCO that can affect load.

B: Incorrect - State and County EOCs are notified when the plant enters EAL condition reportable events.

C: Incorrect - NRC Operations Center is notified per AP-030 of reportable events, but does NOT have to be notified PRIOR to initiation of plant shutdown.

D: Incorrect - ANI is notified of any declared emergency at an Alert level or higher.

Exam Question Number: 90

Reference: AP-030, Pages 11 and 12; OMM-007, Pages 13, 23, 28, 31.

KA Statement: Knowledge of events related to system operation/status that must be reported to internal organizations or external agencies, such as the State, the NRC, or the transmission system operator.

History: New - Written for HLC-08 NRC exam.

SRO - Requires evaluation of station reporting requirements.

| | | | |
|---|---|---|---|
| KA Name: | CONTAINMENT | Tier/Group: | 2/1 |
| Importance Rating: | 2.7/4.1 | RO/SRO Level: | SRO |
| Cognitive Level: | LOW | 10CFR55.43 link: | 43.5 |
| Source: | NEW - 2008 | Learning Objective: | OMM-007-002 |

## 9.0 PROCEDURE

**NOTES:** The NRC shall be notified of those non-emergency events discovered and reportable in accordance with 10 CFR 50.72 and 10 CFR 50.73 within three years from the time that the event occurred. If more than three years have lapsed before the event is discovered, the event need not be reported. If the event was a condition reportable by Technical Specifications and the Technical Specifications have since been amended to remove the requirement, the event need not be reported.

NUREG-1022 provides clarifications for 10 CFR 50.72 and 10 CFR 50.73.

The NRC Operations Center may be contacted via the NRC Emergency Telecommunications System (ETS) telephones. The commercial telephone system may also be used. The NRC Operations Center telephone numbers are found in the ERO Telephone Book and in Attachment 11.13 of this procedure.

Attachment 11.13, Event Notification Worksheet, should be completed for each one-hour or four-hour Report of a significant event made to the NRC in accordance with this procedure.

When making an immediate notification, the caller shall identify:
(i) The Emergency Class declared; or
(ii) The paragraph of 10 CFR 50.72 requiring notification of the Non-Emergency Event.

### 9.1 Immediate and One-Hour Notifications

9.1.1 Notifications listed in Attachment 11.1 shall be performed immediately and no later than one hour following the event to the NRC locations specified in the attachment. This attachment is organized by subject (left hand column) as follows:

- Notification requirements of 10 CFR 50.72
- 10 CFR 50.36 Notification Requirements
- Security/Safeguards Notification Requirements from 10 CFR 73
- Source, byproduct material, and SNM notification requirements of 10 CFR 30, 40, and 70
- ISFSI Notifications
- SNM Shipments Notification Requirements
- Follow-up Notifications

- Notifications to NRC Region II from 10 CFR 20, 30 and 40 requirements
- FFD Notification Requirements
- IAEA Notification Requirements

9.2 Four Hour Notifications

Notifications listed in Attachment 11.2 shall be performed no later than four hours after the event or discovery of the condition to the NRC locations specified in the attachment.

9.3 Eight Hour Notifications

Notifications listed in Attachment 11.3 shall be performed no later than eight hours after the event or discovery of the condition to the NRC locations specified in the attachment.

9.4 Twenty-Four Hour Notifications

Notifications listed in Attachment 11.4 shall be performed no later than twenty-four hours after the event or discovery of the condition to the NRC locations specified in the attachment.

9.5 Two-Working Day Notifications

Notifications listed in Attachment 11.5 shall be performed no later than two working days after the event or discovery of the condition to the NRC locations specified in the attachment.

9.6 Thirty-Day Notifications/Reports

The notifications/reports listed in Attachment 11.6 shall be performed no later than thirty days after the event or discovery of the condition by either phone notification or written report as specified.

9.7 Licensee Event Reports

HBRSEP shall submit an LER for any event of the type described in Attachment 11.7 within 60 days after the discovery of the event. In the case of an invalid actuation reported under 10 CFR 50.73(a)(2)(iv), other than actuation of the reactor protection system (RPS) when the reactor is critical, HBRSEP may, at its option, provide a telephone notification to the NRC Operations Center within 60 days after discovery of the event instead of submitting a written LER. Unless otherwise specified in this section, the HBRSEP shall report an event if it occurred within three years of the date of discovery, regardless of the plant mode or power level, and regardless of the significance of the structure, system, or component that initiated the event. This attachment is organized by subject as follows:

8.2.6 (Continued)

- Item 4 - Enter the maximum time the equipment is allowed to be inoperable in the applicable blank. Circle hrs/days as they apply to the Special Report.

- Item 5 - Enter the Time **AND** Date that item 4 is required in the applicable blank.

| |
|---|
| **NOTE:** ODCM required compensatory actions and initial sampling lack a "grace period". |

- Item 6 - Enter any applicable surveillances or activities and required frequencies which are required as a result of the component inoperability.

  Examples: "ITS LCO 3.2.4 REQUIRED ACTION A.3 requires SR 3.2.1.1 and 3.2.2.1 once per 7 days."

  "ITS LCO 3.6.3 REQUIRED ACTION A.2 requires the affected penetration flow path verified isolated once per 31 days for isolation devices outside CV."

  "TRM TRMS 3.11 REQUIRED COMPENSATORY MEASURE requires obtaining and analyzing grab samples once per 24 hours thereafter, when degassing is not in progress."

8.2.7 **IF** the component is an ITS Support System component, **THEN** perform Attachment 10.11, which is provided to ensure Safety Function Determinations are performed consistently. The TRM contains in-depth guidance for performing Safety Function Determinations. [CAPR 193057]

8.2.8 **IF** the component is an ITS Supported System Component, **THEN** review open Loss of Safety Function Worksheets (Attachment 10.11) for impact. [CAPR 193057]

→ 8.2.9 Initial the blank in Section "H" when the Load Dispatcher has been notified when the component inoperability could force plant shutdown or load reduction. [SOER 99-1, Rec. 1C]

8.2.10 Initial the blank in Section "I" when Planning and Scheduling has been notified when ITS/TRM/ODCM/RG 1.97 actions have been entered and plant shutdown is anticipated.

8.6.3.2 (Continued)

- Review plant logs, EIRs, and scheduled work activities since the Engineering memo was initiated to assure any maintenance that was performed on the listed heat exchangers DID NOT involve tube plugging and that the components are OPERABLE **AND** the SSO **OR** the CRSS will sign when the initial check is completed.

- Record completion of reviews and equipment checks in Auto Log

8.6.4 Place the unit in the appropriate Mode as required by ITS LCO 3.7.8 REQUIRED ACTIONS if the above requirements are not met.

8.6.5 Initial the blank in Section "C" when the Load Dispatcher has been notified of the REQUIRED ACTION entry which could force plant shutdown or load reduction.

8.6.6 Initial the blank in Section "D" when Planning and Scheduling has been notified plant shutdown is anticipated.

8.6.7 Once every 12 hours, Section "E" is completed as follows:

- Verify the affected document revisions are current with the memo **AND** the SSO **OR** the CRSS will sign when the check is completed.

- Review plant logs, EIRs, and scheduled work activities for the previous 12 hours to assure no maintenance was performed on the listed heat exchangers that would affect OPERABILITY **AND** that the components are OPERABLE **AND** the SSO **OR** the CRSS will sign when the check is completed.

- Record completion of checks in Auto Log.

8.9.10 **IF** the inoperable component is a Radiation Monitor, Flowrate Monitor or Tank Level Monitor, **THEN** notify E&C.

→ 8.9.11 **IF** the component inoperability could force a plant shutdown or load reduction, **THEN** notify the Load Dispatcher. [SOER 99-1, Rec. 1C]

8.9.12 **IF** ITS/TRM/ODCM/RG 1.97 actions have been entered **AND** a plant shutdown is anticipated, **THEN** notify Planning and Scheduling.

8.9.13 **WHEN** the equipment is returned to service **OR** the equipment is no longer required due to a change in plant conditions, **THEN** perform the following:

- **IF** the equipment is declared operable, **THEN** perform the following:
  - Enter in AUTO log.
  - **IF** the equipment is a Radiation Monitor, Flowrate Monitor or Tank Level Monitor, **THEN** notify E&C.
- **IF** the equipment is no longer required, **THEN** enter the reason in AUTO log (such as, MODE 5 entered).

**EIR - ITS/TRM/ODCM/RG 1.97**

F. **IF** this is an ITS Support System Component, **THEN** perform Attachment 10.11. [CAPR 193057]

G. **IF** this is an ITS Supported System Component, **THEN** review open Loss of Safety Function Worksheets (Attachment 10.11) for impact.

→ H. Load Dispatcher notified of REQUIRED ACTION which could force plant shutdown/load reduction. _____(SSO/CRSS Initials) [SOER 99-1, Rec. 1C]

I. Planning and Scheduling notified to develop Forced Outage Schedule if ITS/TRM/ODCM/RG 1.97 actions are entered **AND** plant shutdown anticipated. _____(SSO/CRSS Initials)

J. **IF** this EIR is for a Radiation Monitor, Flowrate Monitor or Tank Level Monitor, **THEN** notify E&C of equipment inoperability:

Time _____ Date _____ _____
E&C Shift Technician (Print name)

K. **IF** a Maintenance Rule System Function is affected, **THEN** record Allowed Unavailability Hours, Actual Unavailability Hours, and Unavailability Hours Remaining.

_____Hours Allowed - _____ Hours Actual = _____ Hours Remaining

**IF** unplanned and less than 72 Hours remaining, **THEN** notify the RES Duty Manager.

_____ _____ _____
Name Date Time

L. Completed By: _____ _____
SSO/CRSS Date

M. Comments:_____
_____
_____

N. Restoration

1. Equipment operable: Time _____ Date _____

2. **IF** this EIR is for a Radiation Monitor, Flowrate Monitor or Tank Level Monitor, **THEN** notify E&C of equipment return to service:

Time _____ Date _____ _____
E&C Shift Technician (Print Name)

3. Equipment no longer required due to plant conditions:

Time _____ Date _____

Reason: _____

4. Completed By: _____ _____
SSO/CRSS Date

91. Given the following:

- The Plant is in MODE 3 at 547 $^{o}$F following a reactor trip from 100% RTP.
- RCS chemistry sample indicates DOSE EQUIVALENT I-131 is 73 Micro-Curies/gram.

Which ONE (1) of the following applies to the current condition, and the basis for that requirement?

A. Be in MODE 4 within 48 hours, to place the plant in a MODE where the I-131 limit is NOT APPLICABLE.

B. Reduce $T_{AVG}$ to < 500 $^{o}$F within 6 hours, to ensure RCS saturation pressure is below the S/G Safety Valve lift setpoint.

C. Be in MODE 4 within 6 hours, to place the plant in a MODE where the I-131 limit is NOT APPLICABLE.

D. Reduce $T_{AVG}$ to < 500 $^{o}$F within 6 hours, to ensure RCS saturation pressure is below the S/G PORV lift setpoint.

002 G2.2.40 001/REACTOR COOLANT/2/2/3.4/4.7/SRO/HIGH/43.2/43.5/NEW - 2008/RCS-015

Given the following:

- The Plant is in MODE 3 at 547 $^{o}$F following a reactor trip from 100% RTP.
- RCS chemistry sample indicates DOSE EQUIVALENT I-131 is 73 Micro-Curies/gram.

Which ONE (1) of the following applies to the current condition, and the basis for that requirement?

A. Be in MODE 4 within 48 hours, to place the plant in a MODE where the I-131 limit is NOT APPLICABLE.

B. Reduce $T_{AVG}$ to < 500 $^{o}$F within 6 hours, to ensure RCS saturation pressure is below the S/G Safety Valve lift setpoint.

C. Be in MODE 4 within 6 hours, to place the plant in a MODE where the I-131 limit is NOT APPLICABLE.

D. Reduce $T_{AVG}$ to < 500 $^{o}$F within 6 hours, to ensure RCS saturation pressure is below the S/G PORV lift setpoint.

The correct answer is B.

A: Incorrect - This is the partial LCO applicable to I-131 greater than 0.25, and less than 60 Micro-Curies/gm, except LCO requires MODE 3.

B: Correct - ITS for I-131 is applicable in MODE 3 with $T_{AVG}$ > 500 $^{o}$F. Saturation pressure for 500 $^{o}$F is 665 PSIG which is below the S/G PORV and S/G Safety Valve setpoint.

C: Incorrect - No MODE 4 requirements. Basis is for conditions below S/G safety valve setpoint.

D: Incorrect - Action is correct. Basis is to be below the S/G Safety Valve setpoint, NOT the S/G PORV setpoint.

Exam Question Number: 91

Reference: ITS 3.4.16; ITS 3.4.16 BD.

KA Statement: Ability to apply Technical Specifications for a system.

History: New - Written for HLC-08 NRC exam.

SRO - Knowledge of ITS beyond 1 hour action statements.

| | | | |
|---|---|---|---|
| KA Name: | REACTOR COOLANT | Tier/Group: | 2/2 |
| Importance Rating: | 3.4/4.7 | RO/SRO Level: | SRO |
| Cognitive Level: | HIGH | 10CFR55.43 link: | 43.2/43.5 |
| Source: | NEW - 2008 | Learning Objective: | RCS-015 |

## 3.4 REACTOR COOLANT SYSTEM (RCS)

### 3.4.16 RCS Specific Activity

LCO 3.4.16 The specific activity of the reactor coolant shall be within limits.

APPLICABILITY: MODES 1 and 2,
MODE 3 with RCS average temperature ($T_{avg}$) ≥ 500°F.

ACTIONS

| CONDITION | REQUIRED ACTION | COMPLETION TIME |
|---|---|---|
| A. DOSE EQUIVALENT I-131 > 0.25 μCi/gm. | ----------Note---------- LCO 3.0.4.c is applicable. ---------- | |
| | A.1 Verify DOSE EQUIVALENT I-131 ≤ 60 μCi/gm. | Once per 4 hours |
| | AND | |
| | A.2 Restore DOSE EQUIVALENT I-131 to within limit. | 48 hours |
| B. Gross specific activity of the reactor coolant not within limit. | B.1 Be in MODE 3 with $T_{avg}$ < 500°F. | 6 hours |

(continued)

ACTIONS (continued)

| CONDITION | REQUIRED ACTION | COMPLETION TIME |
|---|---|---|
| C. Required Action and associated Completion Time of Condition A not met.<br><br>OR<br><br>DOSE EQUIVALENT I-131 > 60 $\mu$Ci/gm. | C.1 Be in MODE 3 with $T_{avg}$ < 500°F. | 6 hours |

SURVEILLANCE REQUIREMENTS

| SURVEILLANCE | | FREQUENCY |
|---|---|---|
| SR 3.4.16.1 | Verify reactor coolant gross specific activity ≤ 100/$\bar{E}$ $\mu$Ci/gm. | 7 days |
| SR 3.4.16.2 | ----------NOTE----------<br>Only required to be performed in MODE 1.<br>----------<br><br>Verify reactor coolant DOSE EQUIVALENT I-131 specific activity ≤ 0.25 $\mu$Ci/gm. | 14 days<br><br>AND<br><br>Between 2 and 6 hours after a THERMAL POWER change of ≥ 15% RTP within a 1 hour period |

(continued)

# B 3.4 REACTOR COOLANT SYSTEM (RCS)

## B 3.4.16 RCS Specific Activity

BASES

| | |
|---|---|
| BACKGROUND | The LCO contains specific activity limits for both DOSE EQUIVALENT I-131 and gross specific activity in the reactor coolant. The allowable levels are intended to limit the offsite dose to less than the limits of 10 CFR 50.67 for analyzed accidents. |
| APPLICABLE SAFETY ANALYSES | The LCO limits on the specific activity of the reactor coolant ensure that the resulting offsite doses will not exceed the 10 CFR 50.67 dose limits following an analyzed accident. The limiting accident analysis used in establishing the specified activity limits is the SGTR. Other accidents, such as the Main Steam Line Break accident also use the limits from this LCO in the dose analysis. The SGTR dose analysis (Ref. 2) assumes the specific activity of the reactor coolant at the LCO limit and an existing reactor coolant steam generator (SG) tube leakage rate of 0.3 gpm. The analysis assumes the specific activity of the secondary coolant at its limit of 0.1 μCi/gm DOSE EQUIVALENT I-131 from LCO 3.7.15, "Secondary Specific Activity." |

(continued)

BASES

APPLICABLE SAFETY ANALYSES (continued)

The SGTR event is assumed to be caused by the instantaneous rupture of a steam generator tube which relieves to the faulted steam generator. The primary consequence of this event is the release of radioactivity from the reactor coolant. The analysis also assumes a concurrent loss of power, from which the loss of circulating water through the condenser eventually results in the loss of condenser vacuum. Valves in the condenser bypass lines would automatically close to protect the condenser, thereby causing steam relief directly to the atmosphere from the steam generator PORVs or safety valves. This direct relief of activity from the ruptured tube would continue until the faulted steam generator is isolated. Additional releases due to primary to secondary LEAKAGE would continue from the SG PORVs or safety valves on the intact SGs until they were isolated.

Since no fuel failures are assumed to occur from the event, the specific activity at the LCO limit, and the amount of coolant released would determine the radioactivity that was released to the atmosphere.

The safety analysis shows the radiological consequences of an SGTR accident are within the dose limits of 10 CFR50.67. Operation with iodine specific activity levels greater than the LCO limit is permissible for 48 hours, if the activity level does not exceed 60 μCi/gm.

The permissible iodine level of 60 μCi/gm or less is acceptable because of the low probability of a SGTR accident occurring during the established 48 hour time limit. The occurrence of an SGTR accident at 60 μCi/gm would increase the calculated site boundary dose levels, but still be within 10 CFR 50.67 dose limits.

Limits on RCS specific activity also ensure the radiation shielding design of the plant remains acceptable for plant personnel radiation protection.

RCS specific activity satisfies Criterion 2 of the NRC Policy Statement.

(continued)

BASES (Continued)

LCO

The specific iodine activity is limited to 0.25 μCi/gm DOSE EQUIVALENT I-131, and the gross specific activity in the reactor coolant is limited to the number of μCi/gm equal to 100 divided by $\bar{E}$ (average disintegration energy of the sum of the average beta and gamma energies of the coolant nuclides). The limits on DOSE EQUIVALENT I-131 and gross specific activity ensure the 2 hour dose to an individual at the site boundary during the DBA will be less than the allowed dose.

The SGTR accident analysis (Ref. 2) shows that the 2 hour site boundary dose levels are within acceptable limits. Violation of the LCO may result in reactor coolant radioactivity levels that could, in the event of an SGTR, lead to site boundary doses that exceed the 10 CFR 50.67 dose limits.

APPLICABILITY

In MODES 1 and 2, and in MODE 3 with RCS average temperature ≥ 500°F, operation within the LCO limits for DOSE EQUIVALENT I-131 and gross specific activity are necessary to contain the potential consequences of an SGTR to within the acceptable site boundary dose values.

For operation in MODE 3 with RCS average temperature < 500°F, and in MODES 4 and 5, the release of radioactivity in the event of a SGTR is unlikely since the saturation pressure of the reactor coolant is below the lift pressure settings of the main steam safety valves.

ACTIONS

A Note permits the use of the provisions of LCO 3.0.4.c. This allowance permits entry into the applicable MODE(S) while relying on the ACTIONS. This allowance is acceptable due to the significant conservatism incorporated into the specific activity limit, the low probability of an event which is limiting due to exceeding this limit, and the ability to restore transient specific activity excursions while the plant remains at, or proceeds to power operation.

(continued)

92. Given the following:

- The plant is operating at 100% RTP.
- APP-003-E8, PZR CONTROL HI/LO LVL is illuminated.
- APP-003-F4, CHG PMP HI SPEED is illuminated.
- ALL Pressurizer Level channels indicate 47% Level.
- RCS Pressure is 2215 PSIG and decreasing slowly.
- $T_{AVG}$ is equal to $T_{REF}$.

Which ONE (1) of the following is the appropriate action?

A. Implement AOP-015, SECONDARY LOAD REJECTION.

B. Implement AOP-016, EXCESSIVE PRIMARY LEAKAGE.

C. Implement AOP-025, RTGB INSTRUMENT FAILURE.

D. Implement AOP-019, MALFUNCTION OF RCS PRESSURE CONTROL.

011 G2.4.50 001/PZR LVL CONTROL/2/2/4.2/4.0/SRO/HIGH/43.5/NEW - 2008/PZR-008

Given the following:

- The plant is operating at 100% RTP.
- APP-003-E8, PZR CONTROL HI/LO LVL is illuminated.
- APP-003-F4, CHG PMP HI SPEED is illuminated.
- ALL Pressurizer Level channels indicate 47% Level.
- RCS Pressure is 2215 PSIG and decreasing slowly.
- $T_{AVG}$ is equal to $T_{REF}$.

Which ONE (1) of the following is the appropriate action?

A. Implement AOP-015, SECONDARY LOAD REJECTION.

B. Implement AOP-016, EXCESSIVE PRIMARY LEAKAGE.

C. Implement AOP-025, RTGB INSTRUMENT FAILURE.

D. Implement AOP-019, MALFUNCTION OF RCS PRESSURE CONTROL.

The correct answer is B.

A: Incorrect - A Secondary load rejection would cause PZR level to increase and a Charging pump Low speed alarm would be illuminated.

B: Correct - ALL indications indicate an RCS leak is in progress.

C: Incorrect - ALL PZR level channels indicate the same value, therefore NO instrument failure is in progress.

D: Incorrect - Pressure is decreasing due to a loss of inventory, NOT due to a pressure malfunction or accident.

Exam Question Number: 92

Reference: APP-003-E8 and F4.

KA Statement: Ability to verify system alarm setpoints and operate controls identified in the alarm response manual.

History: New - Written for HLC-08 NRC exam.

SRO - Diagnosis of plant event, selection of correct procedure to mitigate.

| | | | |
|---|---|---|---|
| KA Name: | PZR LVL CONTROL | Tier/Group: | 2/2 |
| Importance Rating: | 4.2/4.0 | RO/SRO Level: | SRO |
| Cognitive Level: | HIGH | 10CFR55.43 link: | 43.5 |
| Source: | NEW - 2008 | Learning Objective: | PZR-008 |

PZR CONTROL HI/LO LVL *** WILL REFLASH ***

AUTOMATIC ACTIONS

1. High Level energizes Back-up Group "A" and "B" Heaters

CAUSE

1. Letdown, Charging mismatch
2. Malfunction of Level Control System
3. Plant transient
5. Excessive RCS leakage
6. Channel failure

OBSERVATIONS

1. Pressurizer Level (LI-460, LI-461 and LI-459A)
2. Charging and Letdown Flow (FI-122A and FI-150)
3. Generator Load
4. $T_{avg}$

ACTIONS

1. **IF** a load rejection has occurred, **THEN** Refer To AOP-015.
2. **IF** excessive RCS leakage exists, **THEN** Refer To AOP-016.
3. **IF** a level controller has failed, **THEN** manually adjust Charging and/or Letdown to maintain PZR level.
4. **IF**, a level channel failure has occurred, **THEN** refer to AOP-025.

DEVICE/SETPOINTS

1. LC-459D, LC-459E / 5% above or below program level

POSSIBLE PLANT EFFECTS

1. PZR high or low level alarm (protection)

REFERENCES

1. ITS LCO 3.4.9
2. AOP-015, Secondary Load Rejection
3. AOP-016, Excessive Primary Plant Leakage
4. AOP-025, RTGB Instrument Failure
4. OWP-030, Pressurizer Level Transmitters (PLT)
5. CWD B-190628, Sheet 459, Cables J, N, L

ALARM

CHG PMP HI SPEED

AUTOMATIC ACTIONS

1. Not Applicable

CAUSE

1. Charging Pump Speed Control Failure
   - Controller failure (RTGB **OR** local)
   - Air Pressure Regulator Failure
2. Low Pressurizer Level
3. RCS leakage
4. Charging Pump recirculation valve open **OR** leaking

OBSERVATIONS

1. Pressurizer Level (LI-460, LI-461 and LI-459A)
2. Charging and Letdown Flow (FI-122 and FI-150)
3. Charging Pump Recirculation Valves (local)

ACTIONS

1. **IF** RCS leakage is indicated, **THEN** Refer To AOP-016.
2. **IF** required to maintain level, **THEN** start standby Charging pump(s).
3. Check RTGB Charging Pump Speed Controls for possible failure.
4. **IF** required, **THEN** dispatch operator to check Charging Pump Speed controller:
   1) Speed control swing arm
   2) Air Pressure Regulator for the affected Charging Pump
      - IA-3892, CHARGING PUMP A REGULATOR
      - IA-3897, CHARGING PUMP B REGULATOR
      - IA-3902, CHARGING PUMP C REGULATOR
3. **IF** Charging Pump Recirculation Valve is open **OR** leaking, **THEN** close the effected valve **OR** isolate the effected pump.
4. **IF** Charging Pump Speed Controller has failed, **THEN** perform either of the following:
   - Operate pumps in manual to control Charging Flow (RTGB failure).

     **OR**
   - Stop the affected Charging Pump **AND** start a standby Charging Pump.

93. Which ONE (1) of the following describes the basis for the limit of Oxygen permitted in each Waste Gas Decay Tank?

Oxygen is maintained less than or equal to ...

A. 6% to ensure carbon steel corrosion does NOT degrade the WGDT and allow radioactive gas release.

B. 6% to ensure potentially explosive gas mixture is maintained below the flammability limit.

C. 4% to ensure potentially explosive gas mixture is maintained below the flammability limit.

D. 4% to ensure carbon steel corrosion does NOT degrade the WGDT and allow radioactive gas release.

071 G2.2.25 001/WASTE GAS DISPOSAL/2/2/3.2/4.2/SRO/LOW/43.2/NEW - 2008/WD-008

Which ONE (1) of the following describes the basis for the limit of Oxygen permitted in each Waste Gas Decay Tank?

Oxygen is maintained less than or equal to ...

A. 6% to ensure carbon steel corrosion does NOT degrade the WGDT and allow radioactive gas release.

B. 6% to ensure potentially explosive gas mixture is maintained below the flammability limit.

C. 4% to ensure potentially explosive gas mixture is maintained below the flammability limit.

D. 4% to ensure carbon steel corrosion does NOT degrade the WGDT and allow radioactive gas release.

The correct answer is C.

A: Incorrect - TRM 3.20, Condition B, Upper Oxygen limit, if exceeded, must immediately suspend ALL additions of Waste Gas AND restore compliance with the Oxygen limit. WGDT are carbon steel, but corrosion is NOT a concern.

B: Incorrect - TRM 3.20, Condition B, Upper Oxygen limit, if exceeded, must immediately suspend ALL additions of Waste Gas AND restore compliance with the Oxygen limit. Explosive mixture is the correct basis for limiting Oxygen concentration.

C: Correct - TRM 3.20, Condition A limits Oxygen $\leq$ 4% to eliminate the hazard of Hydrogen and Oxygen combining to form an explosive mixture.

D: Incorrect - TRM 3.20, Condition A limits Oxygen $\leq$ 4%, but carbon steel corrosion is NOT a concern.

Exam Question Number: 93

Reference: TRM 3.20; TRM 3.20 BD.

KA Statement: Knowledge of the bases in Technical Specifications for limiting conditions for operations and safety limits.

History: New - Written for HLC-08 NRC Exam.

SRO - Knowledge of application of required actions of ITS.

| | | | |
|---|---|---|---|
| KA Name: | WASTE GAS DISPOSAL | Tier/Group: | 2/2 |
| Importance Rating: | 3.2/4.2 | RO/SRO Level: | SRO |
| Cognitive Level: | LOW | 10CFR55.43 link: | 43.2 |
| Source: | NEW - 2008 | Learning Objective: | WD-008 |

## 3.20 WASTE GAS DECAY TANKS - OXYGEN CONCENTRATION

TRMS 3.20 (CTS 3.16.4.1) The oxygen concentration in the four Waste Gas Decay Tanks shall be ≤ 4% by volume.

APPLICABILITY: At all times.

COMPENSATORY MEASURES

----------NOTE----------
Separate Condition entry is allowed for each tank.
---

| CONDITION | REQUIRED COMPENSATORY MEASURE | COMPLETION TIME |
|---|---|---|
| A. Oxygen concentration in a Waste Gas Decay Tank > 4% by volume and ≤ 6% by volume. | A.1 Restore compliance with the requirements of TRMS. | 48 hours |
| B. Oxygen concentration in a Waste Gas Decay Tank > 6% by volume. | B.1 Suspend all additions of waste gas to the affected tank. | Immediately |
| | AND | |
| | B.2 Initiate action to restore compliance with TRMS. | Immediately |
| | AND | |
| | B.3 Reduce oxygen concentration to ≤ 6% by volume. | 24 hours |

(continued)

## B 3.20 WASTE GAS DECAY TANKS - OXYGEN CONCENTRATION

### BASES

This specification is provided to ensure that the concentration of potentially explosive gas mixtures contained in the Waste Gas Holdup System is maintained below the flammability limits of hydrogen and oxygen. This is accomplished by maintaining the oxygen concentration less than 4% through procedural controls. Maintaining the concentration of oxygen below the flammability limit provides assurance that the releases of radioactive materials will be controlled in conformance with the requirements of General Design Criterion 60 of Appendix A to 10 CFR Part 50.

TR 3.20.1 specifies that monitoring be performed on the in-service tank, as that is the tank with the potential for changing gas concentrations.

Technical Specification Section 5.5.12, "Explosive Gas and Storage Tank Radioactivity Monitoring Program," states that this program shall include limits for concentrations of hydrogen and oxygen in the Waste Gas Decay Tanks that are appropriate to the system's design criteria. By always requiring the oxygen concentration to be less than 4%, this TRM limit fully meets the requirement to establish appropriate limits for the concentration of the mixture of hydrogen and oxygen to preclude an explosive mixture.

94. Given the following:

- The plant is in Mode 6 for Refueling.
- Core offload is in progress with a Fuel Assembly on the Manipulator.
- The Transfer Cart is loaded with a fuel assembly, enroute to the SFP.
- You are the Refueling SRO.

It is reported to you that Refueling Cavity level has dropped ONE (1) foot in the last 5 minutes.

Which ONE (1) of the following is the required action?

Place the Fuel Assembly from the Manipulator in the ...

A. RCC change fixture.

B. core in it's original location.

C. Upender.

D. core in any location that is bordered by 2 other assemblies.

G2.1.41 001/CONDUCT OF OPERATION/3/2.8/3.7/SRO/LOW/43.6/NEW - 2008/AOP-020-004

Given the following:

- The plant is in Mode 6 for Refueling.
- Core offload is in progress with a Fuel Assembly on the Manipulator.
- The Transfer Cart is loaded with a fuel assembly, enroute to the SFP.
- You are the Refueling SRO.

It is reported to you that Refueling Cavity level has dropped ONE (1) foot in the last 5 minutes.

Which ONE (1) of the following is the required action?

Place the Fuel Assembly from the Manipulator in the ...

A. RCC change fixture.

B. core in it's original location.

C. Upender.

D. core in any location that is bordered by 2 other assemblies.

The correct answer is B.

A: Incorrect - RCC Change fixture has a basket that is available to receive the fuel assembly. Placing the assembly in the RCC Change fixture while losing Refueling Cavity level could result in the fuel assembly being uncovered and cause excessive radiation exposure.

B: Correct - Place the fuel assembly back in a location where subcritical configuration was known.

C: Incorrect - The Transfer Cart is enroute to the SFP. There is NO basket available to place the fuel assembly in.

D: Incorrect - Placing a fuel assembly in an unanalyzed core position could result in a loss of the required shutdown margin.

Exam Question Number: 94

Reference: AOP-020, Section B.

KA Statement: Knowledge of the refueling process.

History: New - Written for HLC-08 NRC Exam.

SRO - Knowledge of Refueling Procedures

| | | | |
|---|---|---|---|
| KA Name: | CONDUCT OF OPERATION | Tier/Group: | 3 |
| Importance Rating: | 2.8/3.7 | RO/SRO Level: | SRO |
| Cognitive Level: | LOW | 10CFR55.43 link: | 43.6 |
| Source: | NEW - 2008 | Learning Objective: | AOP-020-004 |

| STEP | INSTRUCTIONS | RESPONSE NOT OBTAINED |
|---|---|---|

Section B

Loss Of RHR Inventory - Vessel Head Off

(Page 1 of 9)

| | | |
|---|---|---|
| 1. | Evacuate Non-essential Personnel From Containment As Follows:<br><br>a. Place the VLC Switch in the EMERG position<br><br>b. Depress and hold CV EVACUATION HORN Pushbutton for 15 seconds<br><br>c. Announce The Following Over Plant PA System:<br><br>"ALL NON-ESSENTIAL PERSONNEL EVACUATE CV UNTIL FURTHER NOTICE"<br><br>d. Depress and hold CV EVACUATION HORN Pushbutton for 15 seconds<br><br>e. Repeat PA announcement | |
| 2. | Check Status Of Fuel Handling Activities - IN PROGRESS | Go To Step 5. |

| STEP | INSTRUCTIONS | RESPONSE NOT OBTAINED |
|---|---|---|

Section B

Loss Of RHR Inventory - Vessel Head Off

(Page 2 of 9)

3. Notify Refueling Personnel To Perform The Following:

   a. Place any fuel assembly in transit in one of the following locations:

      - Original Core location
      - Upender
      - Storage location approved by FMP-019, Fuel and Insert Shuffle

   b. Place any Reactor Vessel Upper or Lower Internals in transit in one of the following locations:

      - Reactor Vessel (preferred location)
      - Designated storage location in transfer canal

   c. Verify Fuel Transfer Conveyer Car Location - IN CONTAINMENT

   d. Verify CV Upender Position - HORIZONTAL

4. Verify CLOSED The SFP GATE VALVE

5. Check Cavity Seal OR Sand Plug Failure - IN PROGRESS

   Observe the NOTE prior to Step 14 and Go To Step 14.

6. Contact Outage Management For Assistance In Restoration Of The Cavity Seal OR Sand Plugs

95. Given the following:

- RC personnel need to use Demin Water for decon activities for a spent fuel cask.
- They will need to operate one valve for about an hour and will finish before shift turnover.
- The valve manipulation is NOT covered by an approved procedure.

Which ONE (1) of the following describes how the status of this manipulation is controlled?

A. A temporary procedure must be approved by the SSO prior to operation of the valve.

B. Enter the valve alignment in Start/Stop Log of Autolog.

C. Issue Caution Tags for any component that will be realigned.

D. The portion of the system to be realigned must be taken out of service and controlled with Danger Tags.

G2.2.18 001/EQUIPMENT CONTROL/3/2.6/3.9/SRO/HIGH/43.5/RNP AUDIT - 2001/OMM-001-11-002

Given the following:

- RC personnel need to use Demin Water for decon activities for a spent fuel cask.
- They will need to operate one valve for about an hour and will finish before shift turnover.
- The valve manipulation is NOT covered by an approved procedure.

Which ONE (1) of the following describes how the status of this manipulation is controlled?

A. A temporary procedure must be approved by the SSO prior to operation of the valve.

B. Enter the valve alignment in Start/Stop Log of Autolog.

C. Issue Caution Tags for any component that will be realigned.

D. The portion of the system to be realigned must be taken out of service and controlled with Danger Tags.

The correct answer is B.

A: Incorrect - A temporary procedure is NOT appropriate for single valve operation unless water is to be introduced into a system or within a clearance boundary.

B: Correct - Autolog entry will provide the necessary tracking to ensure proper alignment of the valve.

C: Incorrect - Would use caution tags if the alignment would be in effect past the end of the shift.

D: Incorrect - Portion of system component requires caution tags if out of position past the end of the shift.

Exam Question Number: 95

Reference: OMM-001-11, Pages 23-25.

KA Statement: Knowledge of the process for managing maintenance activities during shutdown operations, such as risk assessments, work prioritization, etc.

History:

SRO - Knowledge of administrative processes for controlling equipment status.

| | | | |
|---|---|---|---|
| KA Name: | EQUIPMENT CONTROL | Tier/Group: | 3 |
| Importance Rating: | 2.6/3.9 | RO/SRO Level: | SRO |
| Cognitive Level: | HIGH | 10CFR55.43 link: | 43.5 |
| Source: | RNP AUDIT - 2001 | Learning Objective: | OMM-001-11-002 |

8.3.4.1 (Continued)

- The performance of AOPs and EOPs.
- The Critical Data Entry shall be placed in the CO's Log **AND** completed when E&C is taking the daily RCS Boron Concentration samples. This will ensure the most accurate data is recorded.

8.3.5 Other Logs

1. The WCC SRO verifies that AutoLog entries are made for: (NCR 81962)

   - The placing and lifting of clearances
   - Clearance boundary changes
   - The implementation and closeout of MMM-042 to control equipment that is NOT within clearance boundaries while in Modes 1 and 2
   - The Caution Tag number for MMM-042 controlled components that are not restored by the end of shift

2. The AOs, MWT AO, and FPAO maintain a narrative log to summarize the major evolutions performed, equipment status, and turnover items. This log is to be maintained in chronological sequence. Log entries may include, but are not limited to, the following: (ACR 94-01584)

   - Date
   - Starts/stops/trips of equipment controlled by the watch station, with a brief description of the reason. Manual starts/stops which are documented by initialing an approved procedure need not be logged.

     **Example:** 0957: Started Waste Gas Compressor "A" for observation by Engineering.

8.3.5.2 (Continued)

- Completion of procedures
- Change of auxiliary system and configuration.
- Surveillance tests started and completed.

  **Example:** 0016: Completed partial OST-679 to return Detector number 16-10 to service.

- Instrument or equipment malfunctions or failures. The entry should include the time the component is removed from service, a brief description of the problem, any compensatory actions taken, and the number of any Work Request written.

  **Example:** 0330: Monitor Tank Pump "B" has excessive packing leakage. WR 99-ABCD1 was written and the pump was removed from service per Clearance 99-00395.Unusual trends or conditions observed.

- Starting and stopping of Gaseous or Liquid Waste Releases (list Waste Release Permit Number).
- Annunciators received that are not the result of operator action or are not expected as a result of evolutions in progress (such as surveillance tests, clearing of equipment or equipment manipulation). It is acceptable to use a rough log for the accumulation of recurring annunciators and to document these annunciators as a single log entry near the end of shift.
- When annunciators are received and none of the actions specified in the APP are taken in response to the alarm because it is determined that none of the prescribed actions would be effective in eliminating the diagnosed cause, then the basis for not taking the prescribed actions should be logged. This basis should include the plant conditions, diagnosis of the event, conclusions of the diagnosis, and any alternate actions that are taken or justification for taking no actions at all.
- The performance of Abnormal Operating Procedures (AOPs), Emergency Operating Procedures (EOPs) and any Fire Brigade response.

8.3.5 (Continued)

3. Component manipulations which are **NOT** part of an approved procedure are to be entered as a component out of position entry in AutoLog. **IF** a component will remain out of its normal position past shift turnover, **THEN** a Caution Tag shall be installed, unless the evolution being performed is turned over on station. For turnover-on-station, the on coming watchstander must receive any applicable pre-job briefs prior to acceptance of an evolution in progress. (CR 96-00309) (NCR 16863) (NCR 26491)

   a. A PRR should be initiated to provide procedural guidance for components out of their normal position that meet any of the following critera:

      - involve safety related equipment
      - involve complex tasks
      - are frequently performed

   b. Components that are out of their normal position are entered into the Component Out of Position Log (Start/Stop Log) in AutoLog. This Log was originally used to document starting and stopping plant equipment in AutoLog. Although it is no longer used for this function, it is still labeled as the Start/Stop Log in the AutoLog program due to software limitations. Use of this log allows positive tracking of components that are out of their normal position during a shift and over shift turnover. The component Out of Position Log (Start/Stop Log) is solely for the purpose of tracking component manipulations that are performed without the direction of an approved procedure.[NCR 16863 (CAPR)]

   c. Components out of their normal position **SHALL** be approved by the CRSS or SSO.

   d. The CRSS/SSO is responsible for ensuring that components out of their normal position are entered into the Component Out of Position Log (Start/Stop Log), and are subsequently removed from the log when they are restored to their normal positions.

# QUESTIONS REPORT
for AUDIT

1. G2.1.18 001////////

HP needs to use Demin water for decon activities for a spent fuel cask. They will need to operate one valve for about an hour and will finish before shift turnover. The valve manipulation is not covered by an approved procedure.

Which ONE (1) of the following describes how the status of this manipulation is controlled?

A. A Temporary procedure must be approved by the SSO prior to operation of the valves.

B. Place a Position Tracking rubber stamp for the alignment in Autolog

C. Issue Caution Tags for any component that will be realigned

D. The portion of the system to be realigned must be taken out of service and controlled with Danger Tags

B is correct. Would use caution tags if the alignment would be in effect past the end of the shift
Common Question 067
Tier 3
K/A Importance Rating - RO 2.9 / SRO 2.9

Ability to make accurate, clear and concise logs, records, status boards, and reports.

Reference(s) - OMM-001-11, pg 22
Proposed References to be provided to applicants during examination - None
Learning Objective -
Question Source - New
Question History -
Question Cognitive Level - Comprehension
10 CFR Part 55 Content - 41
Comments -

Category 1:
Category 2:
Category 3:
Category 4:
Category 5:
Category 6:
Category 7:
Category 8:

96. Given the following:

- An operator is restoring the CV Spray System alignment following major maintenance.
- During system restoration, an operator found a valve which was inside the Clearance boundary out of alignment.
- It is believed that the valve was inadvertently moved during maintenance activities.
- There are other valves within the Clearance boundary within close proximity to the mispositioned valve.

What minimum procedural actions are REQUIRED by OMM-001-8, CONTROL OF EQUIPMENT AND SYSTEM STATUS?

A. Establish a multidiscipline team to establish the cause and determine required actions.

B. Verify ONLY the mispositioned valve is returned to the correct position IAW the system Operating Procedure.

C. Initiate a full system lineup IAW the system Operating Procedure.

D. Initiate a valve lineup for ALL valves within the Clearance boundary IAW the system Operating Procedure.

G2.2.15 001/EQUIPMENT CONTROL/3/3.9/4.3/SRO/LOW/43.3/NEW - 2008/OMM-001-8-002

Given the following:

- An operator is restoring the CV Spray System alignment following major maintenance.
- During system restoration, an operator found a valve which was inside the Clearance boundary out of alignment.
- It is believed that the valve was inadvertently moved during maintenance activities.
- There are other valves within the Clearance boundary within close proximity to the mispositioned valve.

What minimum procedural actions are REQUIRED by OMM-001-8, CONTROL OF EQUIPMENT AND SYSTEM STATUS?

A. Establish a multidiscipline team to establish the cause and determine required actions.

B. Verify ONLY the mispositioned valve is returned to the correct position IAW the system Operating Procedure.

C. Initiate a full system lineup IAW the system Operating Procedure.

D. Initiate a valve lineup for ALL valves within the Clearance boundary IAW the system Operating Procedure.

The correct answer is D.

A: Incorrect - OMM-001-8 specifies that a multidiscipline team be established to determine the cause if the cause is unknown and CANNOT be quickly determined.

B: Incorrect - If the cause of the mispositioning can be clearly identified, a single valve lineup is allowed. The stem does NOT clearly identify the cause.

C: Incorrect - A full valve lineup is to be performed if the cause of the mispositioning is unknown and CANNOT be quickly determined. A full valve lineup is NOT required because the valve is within the Clearance boundary.

D: Correct - OMM-001-8 specifies that a valve lineup of valves within the Clearance boundary is to be performed if maintenance activities were performed on valves within the Clearance boundary, and it is believed that those maintenance activities caused the mispositioning.

Exam Question Number: 96

Reference: OMM-001-8, Page 17.

KA Statement: Ability to determine the expected plant configuration using design and configuration control documentation, such as drawings, line-ups, tag-outs, etc.

History: New - Written for HLC-08 NRC Exam.

SRO - Requires analysis of plant events and administrative processes and determination of required actions.

| | | | |
|---|---|---|---|
| KA Name: | EQUIPMENT CONTROL | Tier/Group: | 3 |
| Importance Rating: | 3.9/4.3 | RO/SRO Level: | SRO |
| Cognitive Level: | LOW | 10CFR55.43 link: | 43.3 |
| Source: | NEW - 2008 | Learning Objective: | OMM-001-8-002 |

8.5.6 Mispositioned Valves

1. When a valve in any plant system is found mispositioned, a full system lineup (including independent verification where applicable) shall be performed IAW the appropriate OP with the following exemptions:

   - **IF** the component was inside a clearance boundary in which maintenance was being performed and it is believed that it became misaligned during that time, **THEN** only the portion of the OP dealing with the valves inside that clearance boundary need be performed.

   - Portions of the system that are known to be properly aligned due to normal system operation or performance of OSTs do not need to have their positions verified IAW the OP.

   - Components whose positions can be determined from the RTGB (via switch positions or permissive/ status lights) do not need to have their positions verified IAW an OP.

   - **IF** the cause of the mispositioning can be clearly identified, **THEN** the scope of the lineup can be restricted to those valves subject to the same cause.

   - **IF** the cause of the mispositioning can **NOT** be immediately identified, **THEN** it is recommended that a multi-disciplined team (Event Review Team) be established to assist in determining the cause.

2. **IF** it is believed that the valve was deliberately mispositioned or tampered with, **THEN** Operational Response to Deliberate Acts Against Plant Equipment in this procedure should be reviewed for applicability (NRC IN 96-71).

97. Given the following:

- The plant is operating at 100% RTP.
- SI Pump “A” is INOPERABLE due to an emergent problem with repairs estimated to take 48 hours.
- An audit of completed surveillance procedures has determined the last quarterly surveillance on SI Pump “C” was missed.

Which ONE (1) of the following describes the appropriate action?

A. Initiate an Operability Determination on SI Pump "C".

B. Perform a Safety Function Determination.

C. Demonstrate the operability of SI Pump “C” within 24 hours OR be in MODE 4 within 13 hours.

D. Demonstrate the operability of SI Pump “C” within 72 hours OR be in MODE 3 within 6 hours.

G2.2.36 001/EQUIPMENT CONTROL/3/3.1/4.2/SRO/LOW/43.2/SALEM - 2001/ITS INTRO-005

Given the following:

- The plant is operating at 100% RTP.
- SI Pump "A" is INOPERABLE due to an emergent problem with repairs estimated to take 48 hours.
- An audit of completed surveillance procedures has determined the last quarterly surveillance on SI Pump "C" was missed.

Which ONE (1) of the following describes the appropriate action?

A. Initiate an Operability Determination on SI Pump "C".

B. Perform a Safety Function Determination.

C. Demonstrate the operability of SI Pump "C" within 24 hours OR be in MODE 4 within 13 hours.

D. Demonstrate the operability of SI Pump "C" within 72 hours OR be in MODE 3 within 6 hours.

The correct answer is C.

A: Incorrect - Inappropriate application of operability determination procedure OPS-NGGC-1305.

B: Incorrect - Inappropriate application of TS 5.5.15.

C: Correct - Conditions in excess of LCO (TWO ECCS trains inoperable), refer to LCO 3.0.3. Enter TS 3.0.3, but operability of SI Pump C can be demonstrated within 24 hours per SR 3.0.3, since the action statement is less than 24 hours.

D: Incorrect - Represents inappropriate application of TS 3.5.2, Condition A.

Exam Question Number: 97

Reference: ITS 3.0.3; SR 3.0.3; ITS 5.5.15; ITS 3.5.2; OMM-007, OPS-NGGC-1305, Page 7 and 8.

KA Statement: Ability to analyze the effect of maintenance activities, such as degraded power sources, on the status of limiting conditions for operations.

History:

SRO - Requires a 'from memory' application of Tech Specs in a situation where TS 3.0.3 is applied but the 24 hour exception per SR 3.0.3 will also apply. The SRO has to determine the appropriate course of action.

| | | | |
|---|---|---|---|
| KA Name: | EQUIPMENT CONTROL | Tier/Group: | 3 |
| Importance Rating: | 3.1/4.2 | RO/SRO Level: | SRO |
| Cognitive Level: | LOW | 10CFR55.43 link: | 43.2 |
| Source: | SALEM - 2001 | Learning Objective: | ITS INTRO-005 |

## 3.0 LIMITING CONDITION FOR OPERATION (LCO) APPLICABILITY

LCO 3.0.1 LCOs shall be met during the MODES or other specified conditions in the Applicability, except as provided in LCO 3.0.2 and 3.0.7.

LCO 3.0.2 Upon discovery of a failure to meet an LCO, the Required Actions of the associated Conditions shall be met, except as provided in LCO 3.0.5 and LCO 3.0.6.

If the LCO is met or is no longer applicable prior to expiration of the specified Completion Time(s), completion of the Required Action(s) is not required unless otherwise stated.

LCO 3.0.3 When an LCO is not met and the associated ACTIONS are not met, an associated ACTION is not provided, or if directed by the associated ACTIONS, the unit shall be placed in a MODE or other specified condition in which the LCO is not applicable. Action shall be initiated within 1 hour to place the unit, as applicable, in:

a. MODE 3 within 7 hours;

b. MODE 4 within 13 hours; and

c. MODE 5 within 37 hours.

Exceptions to this Specification are stated in the individual Specifications.

Where corrective measures are completed that permit operation in accordance with the LCO or ACTIONS, completion of the actions required by LCO 3.0.3 is not required.

LCO 3.0.3 is only applicable in MODES 1, 2, 3, and 4.

LCO 3.0.4 When an LCO is not met, entry into a MODE or other specified condition in the Applicability shall only be made:

(continued)

## 3.0 SURVEILLANCE REQUIREMENT (SR) APPLICABILITY

SR 3.0.1

SRs shall be met during the MODES or other specified conditions in the Applicability for individual LCOs, unless otherwise stated in the SR. Failure to meet a Surveillance, whether such failure is experienced during the performance of the Surveillance or between performances of the Surveillance, shall be failure to meet the LCO. Failure to perform a Surveillance within the specified Frequency shall be failure to meet the LCO except as provided in SR 3.0.3. Surveillances do not have to be performed on inoperable equipment or variables outside specified limits.

---

SR 3.0.2

The specified Frequency for each SR is met if the Surveillance is performed within 1.25 times the interval specified in the Frequency, as measured from the previous performance or as measured from the time a specified condition of the Frequency is met.

For Frequencies specified as "once," the above interval extension does not apply.

If a Completion Time requires periodic performance on a "once per . . ." basis, the above Frequency extension applies to each performance after the initial performance.

Exceptions to this Specification are stated in the individual Specifications.

---

SR 3.0.3

If it is discovered that a Surveillance was not performed within its specified Frequency, then compliance with the requirement to declare the LCO not met may be delayed, from the time of discovery, up to 24 hours or up to the limit of the specified Frequency, whichever is less. This delay period is permitted to allow performance of the Surveillance.

(continued)

## 5.5 Programs and Manuals

5.5.13 Diesel Fuel Oil Testing Program (continued)

b. Acceptability of fuel oil for use by testing the following parameters at a 31 day frequency:

API or specific gravity, viscosity, water and sediment, and cloud point.

The provisions of SR 3.0.2 and SR 3.0.3 are applicable to the Diesel Fuel Oil Testing Program surveillance frequencies.

5.5.14 Technical Specifications (TS) Bases Control Program

This program provides controls for processing changes to the Bases of these Technical Specifications.

a. Changes to the Bases of the TS shall be made under appropriate administrative controls and reviews.

b. Licensees may make changes to Bases without prior NRC approval provided the changes do not involve either of the following:

1. a change in the TS incorporated in the license; or

2. a change to the updated FSAR or Bases that requires NRC approval pursuant to 10 CFR 50.59.

c. The Bases Control Program shall contain provisions to ensure that the Bases are maintained consistent with the UFSAR.

d. Proposed changes that meet the criteria of Specification 5.5.14b above shall be reviewed and approved by the NRC prior to implementation. Changes to the Bases implemented without prior NRC approval shall be provided to the NRC on a frequency consistent with 10 CFR 50.71(e).

5.5.15 Safety Function Determination Program (SFDP)

This program provides controls to ensure loss of safety function is detected and appropriate actions taken. Upon entry into LCO 3.0.6, an evaluation shall be made to determine if loss of safety function exists. Additionally, other appropriate actions

(continued)

## 5.5 Programs and Manuals

5.5.15 Safety Function Determination Program (SFDP) (continued)

may be taken as a result of the support system inoperability and corresponding exception to entering supported system Condition and Required Actions. This program implements the requirements of LCO 3.0.6.

a. The SFDP shall contain the following:

1. Provisions for cross train checks to ensure a loss of the capability to perform the safety function assumed in the accident analysis does not go undetected;

2. Provisions for ensuring the plant is maintained in a safe condition if a loss of function condition exists;

3. Provisions to ensure that an inoperable supported system's Completion Time is not inappropriately extended as a result of multiple support system inoperabilities; and

4. Other appropriate limitations and remedial or compensatory actions.

b. A loss of safety function exists when, assuming no concurrent single failure, a safety function assumed in the accident analysis cannot be performed. For the purpose of this program, a loss of safety function may exist when a support system is inoperable, and:

1. A required system redundant to the system(s) supported by the inoperable support system is also inoperable; or

2. A required system redundant to the system(s) in turn supported by the inoperable supported system is also inoperable; or

3. A required system redundant to the support system(s) for the supported systems described in b.1 and b.2 above is also inoperable.

c. The SFDP identifies where a loss of safety function exists. If a loss of safety function is determined to exist by this program, the appropriate Conditions and Required Actions of the LCO in which the loss of safety function exists are required to be entered.

(continued)

## 3.5 EMERGENCY CORE COOLING SYSTEMS (ECCS)

### 3.5.2 ECCS – Operating

LCO 3.5.2 Two ECCS trains shall be OPERABLE.

APPLICABILITY: MODES 1, 2, and 3

----------NOTES----------

1. In MODE 3, one cold leg safety injection (SI) pump flow path may be isolated by closing the isolation valves for up to 24 hours to perform pressure isolation valve testing per SR 3.4.14.1.

2. Operation in MODE 3 with one required SI pump declared inoperable pursuant to LCO 3.4.12, "Low Temperature Overpressure Protection (LTOP) System," is allowed for up to 4 hours or until the temperature of all RCS cold legs exceeds 375°F, whichever comes first.

---

ACTIONS

| CONDITION | REQUIRED ACTION | COMPLETION TIME |
|---|---|---|
| A. One or more trains inoperable.<br><br>AND<br><br>At least 100% of the ECCS flow equivalent to a single OPERABLE ECCS train available. | A.1 Restore train(s) to OPERABLE status. | 72 hours |
| B. One valve identified in SR 3.5.2.1 or SR 3.5.2.7 with control power or air restored. | B.1 Verify control power is removed to all valves identified in SR 3.5.1.5.<br><br>AND | Immediately<br><br>(continued) |

## 8.8 Loss of Safety Function Worksheet [CAPR 193057] { TC "Loss Of Safety Function Worksheet" \f C \l "2" }

**NOTE:** These instructions do not supersede any instructions contained in the TRM regarding how to perform a Safety Function Determination (SFD). These instructions supplement the TRM instructions and provide an aid in completing the Loss of Safety Function (LOSF) Worksheet.

This determination should be performed by a licensed Senior Reactor Operator and reviewed any time additional inoperabilities occur **OR** an ITS Supported Feature is declared inoperable.

8.8.1 Complete plant conditions table.

8.8.2 Record the ITS Support Feature which is inoperable by ITS LCO number and describe the inoperability.

8.8.3 Determine if the ITS Support Feature inoperability causes an ITS Supported Feature to not meet its LCO **AND** record as applicable.

8.8.4 **IF** no ITS Supported Feature is inoperable due to the ITS Support Feature being inoperable, **THEN** perform the following:

1. N/A the remaining steps and sign Completed By.
2. Forward the attachment to the SSO for review.
3. **IF** the Support Feature will NOT be returned to service prior to end of shift, **THEN** attach the LOSF Worksheet to the EIR for the ITS Support Feature.
4. **IF** the Support Feature will be returned to service prior to end of shift, **THEN** file LOSF Worksheet in EIR notebook.

8.8.5 Determine if ITS Support Feature's LCO requires "CASCADING" to ITS Supported Feature(s) REQUIRED ACTION and record as applicable.

1. **IF** ITS Support Feature's LCO requires "CASCADING" to ITS Supported Feature(s) REQUIRED ACTION, **THEN** the SFD is complete.
2. N/A the remaining steps and sign Completed By.
3. Forward the attachment to the SSO for review. Attach the LOSF Worksheet to the EIR for the ITS Support Feature.

8.8.6 Determine if any other ITS Support LCOs are not met, and record the impact of the inoperabilities on all applicable ITS Supported Features.

8.8.7 Determine if any redundant ITS Supported Features are inoperable.

1. **IF** no redundant ITS Supported Features are inoperable, **THEN** the SFD is complete.

2. N/A the remaining steps and sign Completed By.

3. Forward the attachment to the SSO for review. Attach the LOSF Worksheet to the ITS Supported Feature's EIR.

8.8.8 **IF** a redundant ITS Supported Feature is inoperable, **THEN** determine if a Loss of Safety Function (LOSF) exists for the ITS Supported Feature.

8.8.9 **IF** there is no LOSF, **THEN** perform the following:

1. Calculate and record the maximum completion time to restore the ITS Support Feature **AND** associated ITS Supported Feature(s) to operable status.

2. N/A the remaining steps and sign Completed By.

3. Forward the attachment to the SSO for review. Attach the LOSF Worksheet to the ITS Supported Feature's EIR.

8.8.10 **IF** there is a LOSF, **THEN** perform the following:

1. Calculate and record the maximum completion time to restore the ITS Support Feature and associated ITS Supported Feature(s) to operable status.

2. Enter the applicable ITS LCO for the ITS Supported Feature **OR** ITS LCO 3.0.3 as applicable.

3. Attach the LOSF Worksheet to the ITS Supported Feature's EIR.

8.8.11 The individual who completed the worksheet shall sign and date the worksheet.

8.8.12 The SSO shall sign and date the worksheet.

8.9 Inoperable ITS/TRM/ODCM/RG 1.97 Components That Will Be Returned to Service Prior to End of Shift [CAPR 193057] { TC "Inoperable ITS/TRM/ODCM/RG 1.97 Components That Will Be Returned to Service Prior to End of Shift" \f C \l "2" }

8.9.1 Enter the name of the equipment **AND** the reason for the equipment inoperability in AUTO log.

8.9.2 Verify a Work Request has been initiated (if applicable) **AND** enter the WR number in AUTO log.

8.9.3 **IF** the unavailability is unplanned, **AND** the component is part of a system listed on Attachment 10.10, **THEN** review OMM-048 **AND** the Maintenance Rule Scoping and Performance Criteria Basis section of the Maintenance Rule Database to determine if the listed function(s) of the system is/are affected.

8.9.4 **IF** a system function is affected, **THEN** initiate an NCR stating a Safety Significant Functional Failure has occurred IAW OMM-048, and enter the NCR # in AUTO log.

8.9.5 Enter applicable LCO, TRMS or Specification number in AUTO log. Be specific. For example, provide table number and item number where applicable.

Examples: LCO 3.3.1, Table 3.3.1-1 Item 7.a

TRMS 3.10, Table 3.10-1 Item 3

Specification 2.6.3, Table 2.6-1 Item 4.c

8.9.6 Determine the maximum time the equipment is allowed to be inoperable.

8.9.7 Determine applicable surveillances or activities and required frequencies which are required as a result of the component inoperability.

8.9.8 **IF** the component is an ITS Support System component, **THEN** perform Attachment 10.11, Loss of Safety Function Worksheet **AND** file worksheet in EIR notebook.

8.9.9 **IF** the component is an ITS Supported System Component, **THEN** review open Loss of Safety Function Worksheets for impact **AND** enter in AUTO log to document review.

# LOSS OF SAFETY FUNCTION WORKSHEET

**[CAPR 193057]** { TC "LOSS OF SAFETY FUNCTION WORKSHEET" \f C \l "2" }

## CONTINUOUS USE

**NOTE:** The numbers in the flow chart correspond to the description of SFD steps in Appendix C of the TRM.

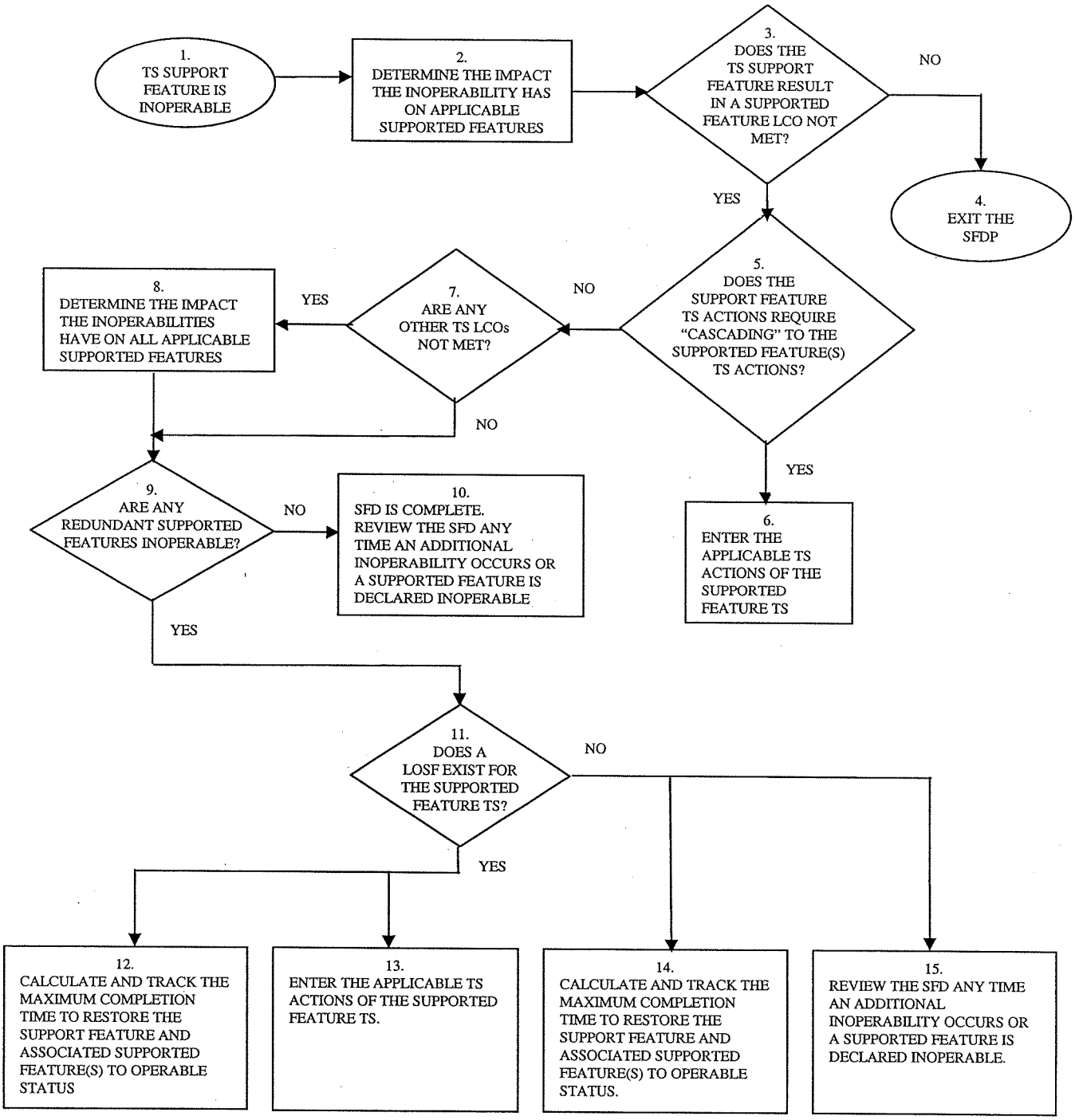

### 3.7. Operability Concern Review (OCR)

This is an action to resolve an operability concern that has been identified through initiation of an NCR per CAP-NGGC-0200. This is also referred to as an Operability Concern Response. An OCR is a PassPort assignment used to document the results of an Operability Review for NCRs where either the attribute for an OCR or OPER ISSUE is checked Y. This is the assignment type used to document the basis for an Operability Determination.

### 3.8. Operability Determination

The actual determination of Operability must be made by a licensed individual. Routine confirmation of Operability is usually made with out an OCR while screening Work Requests and NCRs. If required an OCR is prepared to assist Operations. An Operability Determination typically starts when Operations determines that an OCR is required and it typically ends when the applicable on-shift licensed operator accepts the OCR basis.

### 3.9. Quality-Related

The term "quality-related" encompasses the NRC quality assurance controls and requirements imposed on a nuclear power plant. This specifically includes those activities, services, and equipment associated with safety-related structures, systems and components such as environmental and effluent monitoring; Technical Specification surveillance; operations; radiological emergency planning; fire protection; radiation protection; packaging radioactive material for transport; radioactive waste management systems; security systems; anticipated transient without scram (ATWS) equipment; and environmentally qualified components.

### 3.10. Safety-Related

Those SSCs relied upon to remain functional during and following design basis events to ensure the integrity of the reactor coolant pressure boundary, the capability to shut down the reactor and maintain it in a safe shutdown condition, and the ability to prevent or mitigate the consequences of accidents that could result in potential offsite exposures comparable to the guideline exposures of 10 CFR 50.67.

## 4.0 RESPONSIBILITIES

### 4.1. Manager-Operations

4.1.1. Ensures that an Operability Determination completion time is established and communicated to the SSO for entry into the shift logs.

4.1.2. Ensures that a completed Operability Determination is reviewed by the Plant Nuclear Safety Committee (PNSC) per site specific procedures.

4.1.3. Should ensure the following actions are taken:

1. Obtain a copy of the NCR.
2. Determine the allowed time limit for completion of the Operability Concern Review (OCR).
3. Inform affected personnel of any time limits for completing the OCR.

### 4.2. Superintendent - Shift Operations (SSO)

The Superintendent - Shift Operations (SSO) is responsible for determining the operability of SSC. In order to carry out this responsibility, the SSO should take or verify that the following actions are promptly taken as needed:

4.2.1. Routine screening of deficiencies (including WRs, WO tasks, NCRs, observations and notifications) should ensure that items have been appropriately dispositioned with respect to Operability and degraded or non-conforming conditions. Items will typically be dispositioned as follows:

1. If Operability can be readily confirmed and the item is not a degraded or non-conforming condition, this procedure can be used for guidance but no specific actions to comply with this procedure are required. Documentation of the determination should be included in the WR, NCR or in a log entry.
2. If Operability can not be readily confirmed, or the item is a degraded or non-conforming condition, an NCR is required and the provisions of this procedure are applicable.
3. If there is not a reasonable expectation that the SSC is Operable, then the applicable SSC shall be declared inoperable. An NCR is required and the provisions of this procedure are applicable.

4.2.2. Logging in the shift logs the initiation of an Operability Determination, the time and date of initiation, and the allowed completion time determined by the Manager-Operations.

SALEM FOXTROT
2001 NRC WRITTEN EXAMINATION
WORKSHEET

| | |
|---|---|
| Question Number: | SRO 71 |
| Question: | Unit 1 is operating at 100% power.<br>• 11 SI pump is INOPERABLE due to repairs estimated to take 48 hours<br>• An audit of completed surveillance procedures has determined the quarterly surveillance performed on 12 SI pump 37 days ago was improperly completed.<br><br>Which one of the following describes the appropriate action per Technical Specifications?<br><br>A. Commence a plant shutdown within 1 hour<br>B. Demonstrate the operability of 12 SI pump within 1 hour or commence a plant shutdown<br>C. Demonstrate the operability of 12 SI pump within 24 hours or commence a plant shutdown<br>D. Demonstrate the operability of 12 SI pump within 72 hours or commence a plant shutdown |
| Answer: | C |
| Justification: | Enter TS 3.0.3, but operability can be demonstrated within 24 hours per TS 4.0.3, since the action statement is less than 24 hours. A and B represent inappropriate application of TS 3.0.3 and D represents inappropriate application of TS 3.5.2 |
| Tier/Group | 3 |
| 10CFR55.41<br>10CFR55.43 | **43.2 Because it requires a 'from memory' application of Tech Specs in a situation where TS 3.0.3 is applied but the 24 hour exception per 4.0.3 will also apply. The SRO has to determine the appropriate course of action** |
| Bank/New/ Modified | Modified |
| K/A #: | 2.2.24, Knowledge of effects of maintenance activities on LCOs |
| K/A Values: | RO 2.6 SRO 3.8 |
| Cognitive Level: | Application |
| References: | TS 3.0.3, 4.0.3<br>LP 0300-000-00S-TECHSP-01, Objectives 13 and 14 |

98. Given the following:

- The Reactor has tripped from 100% RTP.
- RCS temperature is 430 $^{o}$F.
- RCS pressure is 635 PSIG.
- S/G "A" pressure is 100 PSIG.
- S/G "B" pressure is 50 PSIG.
- S/G "C" pressure is 50 PSIG.
- CV pressure is approximately 38 PSIG.

Which ONE (1) of the following describes the correct mitigation strategy?

A. Throttle Feedwater to ALL S/Gs to 80 to 90 GPM IAW Foldout A.

B. Isolate Feedwater to S/Gs "B" and "C" IAW Foldout A.

C. Isolate Feedwater to ALL S/Gs IAW EPP-16, UNCONTROLLED DEPRESSURIZATION OF ALL STEAM GENERATORS.

D. Throttle Feedwater to ALL S/Gs to 80 to 90 GPM IAW EPP-16, UNCONTROLLED DEPRESSURIZATION OF ALL STEAM GENERATORS.

G2.4.6 001/EMERG PROC/PLAN/3/3.7/4.7/SRO/HIGH/43.5/NEW - 2008/EPP-16-003

Given the following:

- The Reactor has tripped from 100% RTP.
- RCS temperature is 430 $^{o}$F.
- RCS pressure is 635 PSIG.
- S/G "A" pressure is 100 PSIG.
- S/G "B" pressure is 50 PSIG.
- S/G "C" pressure is 50 PSIG.
- CV pressure is approximately 38 PSIG.

Which ONE (1) of the following describes the correct mitigation strategy?

A. Throttle Feedwater to ALL S/Gs to 80 to 90 GPM IAW Foldout A.

B. Isolate Feedwater to S/Gs "B" and "C" IAW Foldout A.

C. Isolate Feedwater to ALL S/Gs IAW EPP-16, UNCONTROLLED DEPRESSURIZATION OF ALL STEAM GENERATORS.

D. Throttle Feedwater to ALL S/Gs to 80 to 90 GPM IAW EPP-16, UNCONTROLLED DEPRESSURIZATION OF ALL STEAM GENERATORS.

The correct answer is D.

A: Incorrect - Correct mitigative strategy, but Foldout A requires 1 intact S/G. Stem conditions indicate that ALL S/Gs are faulted and EPP-16 will be used.

B: Incorrect - Correct mitigative strategy and correct procedure for 2 faulted S/Gs. Stem conditions indicate that ALL S/Gs are faulted and EPP-16 will be used.

C: Incorrect - EPP-16 is the correct procedure to enter, however, the mitigative strategy is incorrect, Feedwater would NOT be isolated to ALL S/Gs.

D: Correct - Stem conditions indicate that ALL S/Gs are faulted and EPP-16 will be used. EPP-16 throttles flow to ALL S/Gs to 80 to 90 GPM. This ensures S/G internals are kept wet.

Exam Question Number: 98

Reference: EPP-16, Pages 3 and 8; EPP-16 BD, Page 18; Foldout A, Pages 3-8.

KA Statement: Knowledge of EOP mitigation strategies.

History: New - Written for HLC-08 NRC exam.

SRO - Detailed knowledge and implementation of the EOP network mitigation strategy past the Immediate Actions.

| | | | |
|---|---|---|---|
| KA Name: | EMERG PROC/PLAN | Tier/Group: | 3 |
| Importance Rating: | 3.7/4.7 | RO/SRO Level: | SRO |
| Cognitive Level: | HIGH | 10CFR55.43 link: | 43.5 |
| Source: | NEW - 2008 | Learning Objective: | EPP-16-003 |

## Purpose and Entry Conditions

(Page 1 of 1)

1. PURPOSE

This procedure provides actions for a loss of secondary coolant which affects all Steam Generators.

2. ENTRY CONDITIONS

EPP-11, Faulted Steam Generator Isolation, when an uncontrolled depressurization of all Steam Generators occurs.

- END -

| STEP | INSTRUCTIONS | RESPONSE NOT OBTAINED |
|---|---|---|
| 9. | Control Feed Flow To Minimize RCS Cooldown As Follows: | |
| | a. Throttle feed flow to between 80 gpm and 90 gpm to each S/G using MDAFW FLOW CONTROLLER:<br>• FIC-1424, AFW PUMP A DISCH FLOW<br>OR<br>• FIC-1425, AFW PUMP B DISCH FLOW | a. Establish between 80 gpm and 90 gpm feed flow to each S/G as follows:<br>1) Open the breakers for MDAFW HEADER DISCHARGE Valves:<br>• V2-16A (MCC-9, COMPT-2ML)<br>• V2-16C (MCC-9, COMPT-3J)<br>• V2-16A (MCC-10, COMPT-4C)<br>• V2-16B (MCC-10, COMPT-4F)<br>2) Locally throttle AFW HDR DISCH Valves to establish 80 gpm to 90 gpm to each S/G:<br>• AFW-V2-16A - S/G "A"<br>• AFW-V2-16B - S/G "B"<br>• AFW-V2-16C - S/G "C"<br>3) Go To Step 11. |
| | b. Go To Step 11 | |

| RNP STEP | WOG STEP | BASIS/DIFFERENCES |
|---|---|---|

7 2

WOG BASIS

PURPOSE: To control feed flow to minimize the effects of the cooldown due to the secondary depressurization and to subsequently control the transient.

BASIS:

Depending upon the size of the effective break areas for the steam generators, the cooldown rate experienced after reactor trip could exceed 100°F/hr. A reduction of feed flow to the steam generators has three primary effects:

1. To minimize any additional cooldown resulting from the addition of feedwater,
2. To prevent steam generator tube dryout by maintaining a minimum feed flow to the steam generators and,
3. To minimize the water inventory in the steam generators that eventually is the source of additional steam flow to containment or the environment.

The minimum feed flow of (S.04) gpm represents the value in plant specific units corresponding to 25 gpm. The 25 gpm value is representative of a minimum measurable feed flow to a steam generator. Plant specific values may depend upon flow instrumentation and the sensitivity of the controls on the feed flow.

As steam flow rate drops, the feed flow will eventually increase the steam generator inventory. Feed flow is controlled to maintain steam generator narrow range level less than 50% to prevent overfeeding the steam generators.

In addition, as SG pressure and steam flow rate drop, RCS hot leg temperatures will stabilize and start increasing. The operator controls feed flow or dumps steam to stabilize the RCS hot leg temperatures. This allows the safety injection flow to establish conditions for SI termination and minimizes thermal stresses that may be generated.

RNP DIFFERENCES/REASONS

Step 7 of the RNP procedure represents step 2.a of the ERG. The RNP step has been split into multiple steps in order to eliminate the actions contained in the ERG Caution at step 2 and to provide for other Human Factors concerns associated with the ERG step.

SSD DETERMINATION

This is an SSD per criterion 11.

8-11 C2

WOG BASIS

PURPOSE: To alert the operator to maintain a minimum feed flow to minimize any subsequent thermal shock to SG components

BASIS:

If feed flow to a SG is isolated and the SG is allowed to dry out, subsequent reinitiation of feed flow to the SG could create significant thermal stress conditions on SG components. Maintaining a minimum verifiable feed flow to the SG allows the components to remain in a "wet" condition, thereby minimizing any thermal shock effects if feed flow is increased.

RNP DIFFERENCES/REASONS

The RNP procedure places the caution or note in an action step to prevent actions within cautions and noted as required by the writer's guide. The RNP steps for throttling have been split since the throttle valves are different for the SDAFW Pumps and the MDAFW Pumps.

## Purpose and Entry Conditions

(Page 1 of 1)

1. PURPOSE

This procedure provides actions to respond to circumstances within the EOP Network which are time independent.

> NOTE
>
> The Foldouts do NOT apply during performance of the FRPs.

2. ENTRY CONDITIONS

When directed by the EOP Network. Only one Foldout is applicable at a time.

- END -

CONTINUOUS USE

FOLDOUT A

(Page 1 of 5)

1. RCP TRIP CRITERIA

IF BOTH conditions below are met, THEN stop all RCPs:

- SI Pumps - AT LEAST ONE RUNNING AND CAPABLE OF DELIVERING FLOW TO THE CORE
- RCS Subcooling - LESS THAN 35°F [55°F]

2. SI ACTUATION CRITERIA

IF EITHER condition below occurs, THEN Actuate SI and Go To PATH-1, Entry Point A:

- RCS Subcooling - LESS THAN 35°F [55°F]
- PZR Level - CAN NOT BE MAINTAINED GREATER THAN 10% [32%]

3. AFW SUPPLY SWITCHOVER CRITERIA

IF CST level decreases to less than 10%, THEN switch to backup water supply using OP-402, Auxiliary Feedwater System.

4. EMERGENCY COOLING WATER SWITCHOVER CRITERIA

IF normal cooling is lost to any of the following components, THEN establish emergency cooling water using the referenced procedure:

- Charging Pump Oil Coolers - Use Attachment 1 of AOP-014, Component Cooling Water System Malfunction.
- SI Pump Thrust Bearing - Use Attachment 1 of AOP-022, Loss of Service Water.
- MDAFW Pumps - Use Attachment 2 of AOP-022, Loss of Service Water.

CONTINUOUS USE

FOLDOUT A

(Page 2 of 5)

5. DC BUS OR INSTRUMENT BUS FAILURE CRITERIA

a. IF DC Bus failure has occurred, THEN perform the following:

1) IF DC Bus A fails, THEN perform the following:

a) In the Charging Pump Room, Open CVC-358, RWST TO CHARGING PUMP SUCTION.

b) WHEN CVC-358 is open, THEN close LCV-115C, VCT OUTLET from RTGB.

c) In the E-1/E-2 Room, transfer Instrument Bus 2 to MCC-8.

d) In the 4160V Bus Room, trip the Exciter Field Breaker.

e) In EDG A Room perform the following:

- Trip EDG A Fuel Racks.
- Close DA-21A AND DA-25A, DG "A" AIR START OUTLET ISOLATION valves.

2) IF DC Bus B fails, THEN perform the following:

a) In the E-1/E-2 Room, transfer Instrument Bus 3 to MCC-8.

b) In EDG B Room, perform the following:

- Trip EDG B Fuel Racks.
- Close DA-21B AND DA-25B, DG "B" AIR START OUTLET ISOLATION valves.

c) Close CVC-460 A & B, LTDN LINE STOPs.

b. IF MCC-5 is de-energized, THEN transfer power source to DS Bus using the posted instructions at the Kirk Key Interlocked Breakers.

(CONTINUED NEXT PAGE)

CONTINUOUS USE

FOLDOUT A

(Page 3 of 5)

5. (CONTINUED)

c. IF Instrument Bus failure has occurred, THEN perform the following:

1) IF Instrument Bus 4 fails, THEN maintain Steam Dump in the Tavg Mode of operation.

2) IF a failure of only ONE of the below Instrument Busses occurs, THEN transfer the failed bus to MCC-8.

- Instrument Bus 1
- Instrument Bus 2
- Instrument Bus 3
- Instrument Bus 4

3) IF more than ONE Instrument Bus requires transfer to MCC-8 for Nuclear Safety Concerns, THEN strip the affected Busses using Attachment 14 of AOP-024, Loss of Instrument Bus, prior to transferring the Buss(es) to MCC-8.

CONTINUOUS USE

FOLDOUT A

(Page 4 of 5)

6. MSR ISOLATION CRITERIA

IF ANY Purge OR Shutoff Valve does not indicate fully closed, THEN place the associated RTGB Switch to CLOSE.

7. EXCESS LETDOWN ISOLATION CRITERIA

IF a Phase A Isolation signals occurs, THEN verify:

- CVC-387, EXCESS LTDN STOP - CLOSED
- HIC-137, EXCESS LTDN FLOW - CONTROLLER AT 0%

8. INADVERTENT CV SPRAY ACTUATION CRITERIA

IF a CV Spray Actuation occurs AND Containment Pressure has remained below 10 psig, THEN perform the following:

a. Stop ALL RCPs.

b. Stop CV Spray Pumps As Follows:

1) Momentarily place the CONTAINMENT SPRAY Key Switch to the OVRD/RESET position AND return to the NORMAL position.

2) Stop CV Spray Pumps

3) Close CV SPRAY PUMP DISCH Valves:

- SI-880A
- SI-880B
- SI-880C
- SI-880D

CONTINUOUS USE

FOLDOUT A

(Page 5 of 5)

9. FAULTED S/G ISOLATION CRITERIA
IF both the conditions below are met, THEN perform the following:

- Any S/G pressure is decreasing in an uncontrolled manner OR Any S/G has completely depressurized.

AND

- At least ONE S/G is intact.

a. Reset SI.

b. CLOSE the appropriate Auxiliary Feedwater isolation valves to the faulted S/Gs AND OPEN the associated breaker for the valves closed.

S/G "A"

- V2-14A, SDAFW PUMP DISCH MCC-10, CMPT - 3C
- V2-16A, AFW HDR DISCH(Norm Pwr) MCC-10, CMPT - 4C
  (Emerg Pwr MCC-9, CMPT - 2ML)

S/G "B"

- V2-14B, SDAFW PUMP DISCH MCC-9, CMPT - 1C
- V2-16B, AFW HDR DISCH MCC-10, CMPT - 4F

S/G "C"

- V2-14C, SDAFW PUMP DISCH MCC-10, CMPT - 4M
- V2-16C, AFW HDR DISCH MCC-9, CMPT - 3J

c. WHEN the faulted S/Gs dry out, THEN dump steam from intact S/G to control RCS repressurization.

- END -

99. Given the following:

- The plant was operating at 100% RTP when a Seismic event occurred and caused a leak in the Instrument Air header.
- The crew has implemented AOP-017, LOSS OF INSTRUMENT AIR and AOP-021, SEISMIC DISTURBANCE.
- The reactor has been manually tripped and all PATH-1 Immediate Actions have been completed and verified.

Which ONE (1) of the following describes the correct procedures the CRSS will direct or perform?

A. Perform the actions of PATH-1 and AOP-021 concurrently.

B. Perform PATH-1 actions ONLY. AOP-017 and AOP-021 are NO longer applicable.

C. Perform the actions of PATH-1 and AOP-017 concurrently.

D. Perform the actions of PATH-1, AOP-017 and AOP-021 concurrently.

G2.4.8 001/EMERG PROC/PLAN/3/3.8/4.5/SRO/HIGH/43.5/NEW - 2008/OMM-022-009

Given the following:

- The plant was operating at 100% RTP when a Seismic event occurred and caused a leak in the Instrument Air header.
- The crew has implemented AOP-017, LOSS OF INSTRUMENT AIR and AOP-021, SEISMIC DISTURBANCE.
- The reactor has been manually tripped and all PATH-1 Immediate Actions have been completed and verified.

Which ONE (1) of the following describes the correct procedures the CRSS will direct or perform?

A. Perform the actions of PATH-1 and AOP-021 concurrently.

B. Perform PATH-1 actions ONLY. AOP-017 and AOP-021 are NO longer applicable.

C. Perform the actions of PATH-1 and AOP-017 concurrently.

D. Perform the actions of PATH-1, AOP-017 and AOP-021 concurrently.

The correct answer is C.

A: Incorrect - PATH-1 is a higher priority procedure that will be implemented to verify the reactor is shutdown and the plant stabilized. AOP-021 is NOT a concurrent use procedure and is NOT required to be performed.

B: Incorrect - AOP-017 is a concurrent use procedure and will be performed by a licensed operator when directed by the CRSS, concurrent with PATH-1 actions. AOP-021 is NOT a concurrent use procedure.

C: Correct - AOP-017 is a concurrent use procedure and will be performed by a licensed operator when directed by the CRSS, concurrent with PATH-1 actions.

D: Incorrect - PATH-1 is a higher priority procedure that will be implemented to verify the reactor is shutdown and the plant stabilized. AOP-017 is a concurrent use procedure and will be performed by a licensed operator when directed by the CRSS, concurrent with PATH-1 actions. AOP-021 is NOT a concurrent use procedure and is NOT required to be performed.

Exam Question Number: 99

Reference: OMM-022, Page 38.

KA Statement: Knowledge of how abnormal operating procedures are used in conjunction with EOPs.

History: New - Written for HLC-08 NRC exam.

SRO - Assessment of plant conditions and determination of procedures required for mitigating those events.

| | | | |
|---|---|---|---|
| KA Name: | EMERG PROC/PLAN | Tier/Group: | 3 |
| Importance Rating: | 3.8/4.5 | RO/SRO Level: | SRO |
| Cognitive Level: | HIGH | 10CFR55.43 link: | 43.5 |
| Source: | NEW - 2008 | Learning Objective: | OMM-022-009 |

### 8.3.14 Interface Between EOP Network and AOPs/Concurrent AOPs{ TC "Interface Between EOP Network and AOPs/Concurrent AOPs" \f C \l "3" }

1. Events which result in utilization of AOPs may later deteriorate to the point of implementing the procedures of the EOP Network. When this occurs, the potential exists for equipment to be improperly utilized and for resources to be unnecessarily diluted by continuing the subsequent actions of AOPs in effect or implementing AOPs which may become applicable while trying to concurrently proceed through the EOP Network.

2. With the exception of concurrent AOPs, the immediate and subsequent actions of AOPs need not be continued while within the EOP Network since the procedures of the EOP Network have been constructed to address critical safety functions without these AOPs.

3. The following AOPs are considered concurrent AOPs and should be performed while in the EOP Network:

   - AOP-005
   - AOP-014
   - AOP-017
   - AOP-018
   - AOP-034
   - AOP-041

4. In the case of the above referenced AOPs, it is expected that the CRSS will continue with the EOPs while another licensed operator implements the AOP after any applicable immediate actions of the EOPs have been completed. The operator performing the AOP will notify the CRSS and RTGB operator of all RTGB controls to be manipulated and/or local actions to be taken which could impact the performance of the EOPs.

100. Which ONE (1) of the following is the basis for stopping ALL Reactor Coolant Pumps (RCPs) in FRP-H.1, RESPONSE TO LOSS OF SECONDARY HEAT SINK?

A. Subsequent actions will cause RCP operating requirements to be exceeded.

B. It eliminates the heat input from the RCPs to extend the time available to restore feed flow before bleed and feed criteria is met.

C. It minimizes the loss of RCS inventory when the PZR PORVs are OPENED to initiate bleed and feed.

D. Stopping the RCPs reduces RCS pressure in the Cold Legs to maximize injection flow.

G2.4.18 001/EMERG PROC/PLAN/3/3.3/4.0/SRO/LOW/43.1/NEW - 2008/FRP-H.1-003

Which ONE (1) of the following is the basis for stopping ALL Reactor Coolant Pumps (RCPs) in FRP-H.1, RESPONSE TO LOSS OF SECONDARY HEAT SINK?

A. Subsequent actions will cause RCP operating requirements to be exceeded.

B. It eliminates the heat input from the RCPs to extend the time available to restore feed flow before bleed and feed criteria is met.

C. It minimizes the loss of RCS inventory when the PZR PORVs are OPENED to initiate bleed and feed.

D. Stopping the RCPs reduces RCS pressure in the Cold Legs to maximize injection flow.

The correct answer is B.

A: Incorrect - Depressurization of S/Gs is performed in an attempt to restore feed for core cooling, but these actions would NOT lower RCS pressure to below RCP operating conditions.

B: Correct - Elimination of the RCPs as a heat source extends the time available before bleed and feed criteria is met by as much as 9 minutes.

C: Incorrect - RCS pressure will decrease when the PZR PORVs are opened. Stopping the RCPs to eliminate the heat input to the RCS is the primary reason.

D: Incorrect - Stopping the RCP does reduce pressure, but does NOT have an impact on injection flow.

Exam Question Number: 100

Reference: FRP-H.1 BD, Pages 15, 16 and 48.

KA Statement: Knowledge of the specific bases for EOPs.

History: New - Written for HLC-08 NRC exam.

SRO - Knowledge of strategy or action in emergency procedures beyond immediate actions.

| | | | |
|---|---|---|---|
| KA Name: | EMERG PROC/PLAN | Tier/Group: | 3 |
| Importance Rating: | 3.3/4.0 | RO/SRO Level: | SRO |
| Cognitive Level: | LOW | 10CFR55.43 link: | 43.1 |
| Source: | NEW - 2008 | Learning Objective: | FRP-H.1-003 |

## 2.4 Feeding a Dry Steam Generator

If bleed and feed has been initiated, during restoration of secondary heat sink, feeding a dry steam generator may be necessary. If the event was initiated from high temperature and high decay heat conditions it is likely that feedwater flow will have to be established to a hot, dry steam generator. A hot, dry steam generator is defined as a steam generator in which the primary side of the steam generator is above 550 F** and the secondary side has no liquid inventory. Reestablishment of feedwater is the more desirable mode of recovery from a loss of secondary heat sink than remaining on bleed and feed and establishing cold leg recirculation for long term cooling because this will be more likely to avoid core uncovery. However, care must be taken when re-establishing feedwater flow to minimize the effects of thermal shock consistent with the urgency of the need to restore the secondary side heat sink.

Since the heat removal capability of one steam generator is always greater than decay heat, it is advisable to reestablish feedwater to only one steam generator regardless of the size of the plant or number of loops. Thus, if a failure in an SG occurs due to excessive thermal stresses, the failure is isolated to one steam generator.

If bleed and feed has been initiated and RCS temperature is increasing, the re-establishment of feedwater flow should be limited to one steam generator and the flow rate used should be as high as can be made available due to the urgency of the situation. If RCS temperatures are stable or decreasing when feedwater flow is restored the flow should be directed to one steam generator and the rate should be limited to the plant-specific equivalent of 25 - 100 gpm until wide range level is established. With stable or decreasing RCS temperatures, the feedwater flow rate is limited to minimize the potential impact of excessive thermal stresses since a direct measure of the steam generator temperature is not available. Once an indicated wide range level is achieved in the affected steam generator, feedwater flow can be adjusted as necessary to restore level into the narrow range and thereby satisfying the requirements for a secondary heat sink.

Once feedwater is established, the feeding process should continue until the RCS temperature indications are decreasing. At that time the active steam generator should be checked for symptoms indicating a faulted or ruptured condition. If the active steam generator is faulted or ruptured, then feedwater should be established to another intact steam generator. If an intact steam generator does not exist, then a decision should be made to use the best available steam generator, which may be the active steam generator. Once the heat load has been transferred to a backup steam generator, the original steam generator should be isolated to prevent further radiation releases.

Thus, the process of initiating feedwater to a dry steam generator, as described here, is one that accounts for the fact that the steam generator temperature may be above 550 F. The number of steam generators that may be fed in a hot, dry condition are limited and if RCS temperature is decreasing the flow rate is also limited so as to limit the thermal shock to the steam generator being fed. Subsequent to securing SI and exiting FR-H.1 the remaining dry steam generators may have their levels recovered at the direction of the plant engineering staff in a manner that will minimize thermal shock to the steam generators. This evaluation should consider steam generator materials and properties, Technical Specification considerations, etc.

## 2.5 Reactor Coolant Pump Operation

Operation of reactor coolant pumps will affect the dryout time of the steam generators due to RCP heat addition and, therefore, will affect the time at which operator action to initiate bleed and feed must occur.

Studies have been performed using the LOFTRAN code (Reference 2) to assess the impact of RCP operation on the time PORVs will open without operator action and the time to steam generator dryout for a loss of main feedwater event without AFW available. A four-loop plant typical of current Westinghouse design was used. It had a core power of 3411 Mwt and an RCP steady state power of 14 Mwt. Model F steam generators were also assumed. Thus, while this plant is not identical to the one used in References 1, 3 and 4, the study will be representative of Westinghouse plant response and sufficient to determine the impact of RCP status on the time available before operator action to initiate bleed and feed is required.

The cases analyzed were:

Case 1: RCPs running throughout transient

Case 2: RCPs tripped at reactor trip

Case 3: RCPs tripped 5 minutes after reactor trip

---

* 550°F is a temperature evaluated to be low enough that thermal stress would not lead to a failure when feedwater is established to any remaining dry steam generator.

The focus of the analysis was to determine the additional time available to the operator as a result of eliminating RCP heat from the system before action to initiate bleed and feed became necessary. Thus, the time of two events was used to determine the impact of RCP trip time. The two events are 1) the time when PORVs automatically open as a result of the degraded heat transfer capability of the steam generator and 2) the time when steam generator secondaries dry out.

Table 1 shows a comparison of the three cases. Case 1 represents a situation where steam generators would experience the earliest dryout due to the RCP heat load and Case 2 is where the steam generators would experience the latest dryout. The extension in dryout time from Case 1 to Case 2 is between 7 and 9 minutes, depending upon the indication of dryout that is chosen. The use of the time to PORV opening will have some uncertainty due to the uncertainty in predicting non-equilibrium effects in the pressurizer. However, PORV opening time is probably the best indicator obtainable from the LOFTRAN analysis of the time available until bleed and feed must be initiated.

TABLE 1

IMPACT OF RCP TRIP ON LOSS OF HEAT SINK

| PARAMETER | CASE 1* | CASE 2* | CASE 3* |
|---|---|---|---|
| PORVs OPEN | 30.75 min | 37.83 min | 35.80 min |
| STEAM GENERATOR DRY OUT | 33.10 min | 42.50 min | 40.93 min |

* CASE 1: All RCPs Running

CASE 2: All RCPs Tripped at Reactor Trip

CASE 3: All RCPs Tripped 5 Minutes After Reactor Trip

Reactor trip occurred at 28 seconds.

Loss of main feed occurred at 10 seconds.

Case 3, where the RCPs are tripped 5 minutes after reactor trip, is a best estimate expectation of when the operator can be expected to trip RCPs following a reactor trip based on guidance provided in this guideline. Thus, the extension in time to loss of heat sink symptoms is the most realistic that could be expected based on anticipated operator response. The extension to loss of secondary heat sink symptoms is about 5 minutes based on PORV opening time. This compares favorably with the extension already seen between Cases 1 and 2. Thus, operator action to trip RCPs upon entering this guideline for loss of secondary heat sink can appreciably delay the need for bleed and feed and the loss of secondary heat sink. Thus, time can be gained for the operator to establish a means of supplying feedwater.

Delaying the loss of secondary heat sink is not the only reason for tripping RCPs. RCPs running can also reduce the effectiveness of bleed and feed. RCP heat input to the RCS will result in increased steam generation hindering the depressurization of the RCS during bleed and feed. The higher pressure produced by RCP operation will reduce SI flow and increase inventory lost through the PORVs. Therefore, RCPs should be tripped if AFW flow cannot be established immediately after entering this guideline.

## 3. RECOVERY/RESTORATION TECHNIQUE

The objective of the recovery/restoration technique incorporated into guideline FR-H.1 is to restore and/or maintain adequate secondary heat removal capability and to establish RCS bleed and feed heat removal if secondary heat removal capability cannot be maintained.

The following subsections provide a summary of the major categories of operator actions and key utility decision points for guideline FR-H.1, RESPONSE TO LOSS OF SECONDARY HEAT SINK.

### 3.1 High Level Action Summary

A high level summary of the actions performed in FR-H.1 is given below in the form of major action categories. These are described below in more detail.

MAJOR ACTION CATEGORIES IN FR-H.1

- Attempt Restoration of Feed Flow To Steam Generators
- Initiation of RCS Bleed and Feed Heat Removal

| RNP STEP | WOG STEP | BASIS/DIFFERENCES |
|---|---|---|

RNP DIFFERENCES/REASONS

The RNP procedure has been split into several steps in order to provide the level of detail required to satisfy NUREG-1358. The intent of the ERG has been maintained in the steps. Specifically each step performs the following:

Step 7: Satisfies the ERG step 2.a

Step 8: This step determines and attempts to isolate an AFW pipe break if this is the cause of the loss of function.

Step 9: Attempts a restart of the MDAFW Pumps. Start of the pumps should have already been attempted in Path-1. This step will also attempt to reset a tripped breaker if that is the reason the pumps have not started. If the start is successful the operator verifies flow and exits the procedure.

Step 10: Attempts to start the SDAFW pump. The action verb is listed as "verify" therefore if local actions are required to open the valves, this should be attempted. If the SDAFW pump overspeed tripped has actuated, even locally opening the steam supply valves will not start the pump unless the trip can be reset. If the start is successful the operator verifies flow and exits the procedure.

Step 11: This step provides local actions for valve alignment and local start of the MDAFW pumps. The local start function over-rides many of the trip features for the pumps and may be successful in starting the pump.

Step 12: Satisfies the ERG step 2.d.

Step 13: Satisfies the ERG step 2.e.

SSD DETERMINATION

This is an SSD per criterion 4, 10, and 11.

14 3 WOG BASIS

PURPOSE: To stop RCPs in order to extend the time to restore feed flow to the SGs

BASIS:

RCP operation results in heat addition to the RCS water. By tripping the RCPs, the effectiveness of the remaining water inventory in the SGs is extended, which extends the time at which the operator action to initiate bleed and feed must occur. This extension of time is additional time for the operator to restore feedwater flow to the SGs. Additional information is provided in subsection 2.5, Reactor Coolant Pump Operation, of this background document.

KNOWLEDGE:

Stopping all RCPs will result in an interim plant transient on RCS pressure and temperature as natural circulation flow conditions are established in the RCS. An example of this is shown in Figures 6 and 7 where RCS pressure and temperature rise and reestablish new steady state conditions prior to steam generator dryout occurring. If rising RCS pressure and hot leg temperatures are the criteria for initiation of bleed and feed heat removal, the operator must evaluate whether these conditions are caused by an RCP trip or by a loss of secondary heat sink in order to determine if bleed and feed heat removal is to be established.

RNP DIFFERENCES/REASONS

There are essentially no differences.

SSD DETERMINATION

This is not an SSD.