NUREG/CP-0194
Volume 1 of 3

EPRI 1020621
Final Report

Methods for Applying Risk Analysis to Fire Scenarios (MARIAFIRES)-2008

NRC-RES/EPRI Fire PRA Workshop

Volume 1

Overall Course

and

Module 1: PRA/HRA

Based on the Joint
NRC-RES/EPRI Training Workshops
Conducted in 2008

September 28 – October 2, 2008, and
November 17-20, 2008, Bethesda, MD

David Stroup
Felix Gonzalez
Hugh Woods

U.S. Nuclear Regulatory Commission
Office of Nuclear Regulatory Research
Washington, DC 20555-0001

Electric Power Research Institute
3420 Hillview Avenue
Palo Alto, CA 94303

AVAILABILITY OF REFERENCE MATERIALS IN NRC PUBLICATIONS

NRC Reference Material

As of November 1999, you may electronically access NUREG-series publications and other NRC records at NRC's Public Electronic Reading Room at http://www.nrc.gov/reading-rm.html. Publicly released records include, to name a few, NUREG-series publications; *Federal Register* notices; applicant, licensee, and vendor documents and correspondence; NRC correspondence and internal memoranda; bulletins and information notices; inspection and investigative reports; licensee event reports; and Commission papers and their attachments.

NRC publications in the NUREG series, NRC regulations, and *Title 10, Energy*, in the Code of *Federal Regulations* may also be purchased from one of these two sources.

1. The Superintendent of Documents
   U.S. Government Printing Office
   Mail Stop SSOP
   Washington, DC 20402–0001
   Internet: bookstore.gpo.gov
   Telephone: 202-512-1800
   Fax: 202-512-2250
2. The National Technical Information Service
   Springfield, VA 22161–0002
   www.ntis.gov
   1–800–553–6847 or, locally, 703–605–6000

A single copy of each NRC draft report for comment is available free, to the extent of supply, upon written request as follows:

Address: U.S. Nuclear Regulatory Commission
Office of Administration
Mail, Distribution and Messenger Team
Washington, DC 20555-0001
E-mail: DISTRIBUTION@nrc.gov
Facsimile: 301–415–2289

Some publications in the NUREG series that are posted at NRC's Web site address http://www.nrc.gov/reading-rm/doc-collections/nuregs are updated periodically and may differ from the last printed version. Although references to material found on a Web site bear the date the material was accessed, the material available on the date cited may subsequently be removed from the site.

Non-NRC Reference Material

Documents available from public and special technical libraries include all open literature items, such as books, journal articles, and transactions, *Federal Register* notices, Federal and State legislation, and congressional reports. Such documents as theses, dissertations, foreign reports and translations, and non-NRC conference proceedings may be purchased from their sponsoring organization.

Copies of industry codes and standards used in a substantive manner in the NRC regulatory process are maintained at—

The NRC Technical Library
Two White Flint North
11545 Rockville Pike
Rockville, MD 20852–2738

These standards are available in the library for reference use by the public. Codes and standards are usually copyrighted and may be purchased from the originating organization or, if they are American National Standards, from—

American National Standards Institute
11 West 42nd Street
New York, NY 10036–8002
www.ansi.org
212–642–4900

Legally binding regulatory requirements are stated only in laws; NRC regulations; licenses, including technical specifications; or orders, not in NUREG-series publications. The views expressed in contractor-prepared publications in this series are not necessarily those of the NRC.

The NUREG series comprises (1) technical and administrative reports and books prepared by the staff (NUREG–XXXX) or agency contractors (NUREG/CR–XXXX), (2) proceedings of conferences (NUREG/CP–XXXX), (3) reports resulting from international agreements (NUREG/IA–XXXX), (4) brochures (NUREG/BR–XXXX), and (5) compilations of legal decisions and orders of the Commission and Atomic and Safety Licensing Boards and of Directors' decisions under Section 2.206 of NRC's regulations (NUREG–0750).

DISCLAIMER: Where the papers in these proceedings have been authored by contractors of the U. S. Government, neither the U.S. Government nor any agency thereof, nor any U.S. employee makes any warranty, expressed or implied, or assumes any legal liability or responsibility for any third party's use or the results of such use, of any information, apparatus, product, or process disclosed in these proceedings, or represents that its use by such third party would not infringe privately owned rights. The views expressed in these proceedings are not necessarily those of the U. S. Regulatory Commission.

Methods for Applying Risk Analysis to Fire Scenarios (MARIAFIRES)-2008

NRC-RES/EPRI Fire PRA Workshop

Volume 1: Overall Course and Module 1: PRA/HRA

NUREG/CP-0194 **EPRI 1020621**

Final Report

July 2010

U.S. Nuclear Regulatory Commission
Office of Nuclear Regulatory Research
Washington, DC 20555-0001

U.S. NRC-RES Project Manager
M. H. Salley

Electric Power Research Institute
3420 Hillview Avenue
Palo Alto, CA 94303

EPRI Project Manager
R. P. Kassawar

COURSE TRAINING INSTRUCTORS AND PROJECT MANAGERS

Sandia National Laboratories (SNL)
1515 Eubank SE
Albuquerque, NM 87185

Steven Nowlen

Mardy Kazarians (Kazarians & Associates)

Frank Wyant

Jeff LaChance

J.S. Hyslop/ Kendra Hill

U.S. NRC-RES Project Managers

Science Applications International Corp. (SAIC)
1671 Dell Ave, Suite 100
Campbell, CA 95008

Bijan Najafi

Francisco Joglar-Biloch

Dan Funk (EDAN Engineering)

Richard Anoba (Anoba Consulting Services)

R.P. Kassawara

EPRI Project Manager

CITATIONS

This report was prepared by:

U.S. Nuclear Regulatory Commission,
Office of Nuclear Regulatory Research (RES)
Washington, DC 20555-0001

Principal Investigators:
D. Stroup
F. Gonzales

Electric Power Research Institute (EPRI)
3420 Hillview Avenue
Palo Alto, CA 94303

Principal Investigator:
R. Kassawara

This report describes research sponsored jointly by the U.S. Nuclear Regulatory Commission, RES, and EPRI.

The report is a corporate document that should be cited in the literature in the following manner:

Methods for Applying Risk Analysis to Fire Scenarios (MARIAFIRES), NRC-RES/EPRI Fire PRA Workshop, Volume 1: Overall Course and Module 1: PRA/HRA, U.S. Nuclear Regulatory Commission, Office of Nuclear Regulatory Research (RES), Washington, DC 20555-0001, and Electric Power Research Institute (EPRI), Palo Alto, CA, NUREG/CP-0194 and EPRI 1020621.

NUREG/CP-0194 and EPRI 1020621, Volume 1,

has been reproduced from the best available copy

DISCLAIMER OF WARRANTIES AND LIMITATION OF LIABILITIES

THIS DOCUMENT WAS PREPARED BY THE ORGANIZATION(S) NAMED BELOW AS AN ACCOUNT OF WORK SPONSORED OR COSPONSORED BY THE ELECTRIC POWER RESEARCH INSTITUTE, INC. (EPRI). NEITHER EPRI NOR ANY MEMBER OF EPRI, ANY COSPONSOR, THE ORGANIZATION(S) BELOW, OR ANY PERSON ACTING ON BEHALF OF ANY OF THEM:

(A) MAKES ANY WARRANTY OR REPRESENTATION WHATSOEVER, EXPRESS OR IMPLIED, (I) WITH RESPECT TO THE USE OF ANY INFORMATION, APPARATUS, METHOD, PROCESS, OR SIMILAR ITEM DISCLOSED IN THIS DOCUMENT, INCLUDING MERCHANTABILITY AND FITNESS FOR A PARTICULAR PURPOSE, OR (II) THAT SUCH USE DOES NOT INFRINGE ON OR INTERFERE WITH PRIVATELY OWNED RIGHTS, INCLUDING ANY PARTY'S INTELLECTUAL PROPERTY, OR (III) THAT THIS DOCUMENT IS SUITABLE TO ANY PARTICULAR USER'S CIRCUMSTANCE; OR

(B) ASSUMES RESPONSIBILITY FOR ANY DAMAGES OR OTHER LIABILITY WHATSOEVER (INCLUDING ANY CONSEQUENTIAL DAMAGES, EVEN IF EPRI OR ANY EPRI REPRESENTATIVE HAS BEEN ADVISED OF THE POSSIBILITY OF SUCH DAMAGES) RESULTING FROM YOUR SELECTION OR USE OF THIS DOCUMENT OR ANY INFORMATION, APPARATUS, METHOD, PROCESS, OR SIMILAR ITEM DISCLOSED IN THIS DOCUMENT.

ORGANIZATION THAT PREPARED THIS DOCUMENT:

U.S. Nuclear Regulatory Commission, Office of Nuclear Regulatory Research

NOTE

For further information about EPRI, call the EPRI Customer Assistance Center at 800.313.3774 or
e-mail askepri@epri.com.

Electric Power Research Institute, EPRI, and TOGETHER···SHAPING THE FUTURE OF ELECTRICITY are registered service marks of the Electric Power Research Institute, Inc.

ABSTRACT

The U.S. Nuclear Regulatory Commission (NRC) approved the risk-informed and performance-based alternative regulation 10 CFR 50.48(c) in July 2004, which allows licensees the option of using fire protection requirements contained in the National Fire Protection Association (NFPA) Standard 805, "Performance Based Standard for Fire Protection for Light-Water Reactor Electric Generating Plants, 2001 Edition," with certain exceptions. To support licensees's use of that option, NRC and the Electric Power Research Institute (EPRI) jointly issued NUREG/CR-6850 (EPRI 1011989) "Fire PRA Methodology for Nuclear Power Facilities," in September 2005. That report documents the state-of-the art methods, tools, and data for conducting a fire probabilistic risk assessment (PRA) in a commercial nuclear power plant (NPP) application. The report is intended to serve the needs of a fire risk analysis team by providing a general framework for conduct of the overall analysis as well as specific recommended practices to address each key aspect of the analysis. Participants from the U.S. nuclear power industry supported demonstration analyses and provided peer review of the program. Methodological issues raised in past fire risk analyses, including the Individual Plant Examination of External Events fire analyses, are addressed to the extent allowed by the current state-of-the-art and the overall project scope. Although the primary objective of the report is to consolidate existing state-of-the-art methods, in many areas, the newly documented methods represent a significant advance over previous methods.

NUREG/CR-6850 does not constitute regulatory requirements, and NRC participation in this study neither constitutes nor implies regulatory approval of applications based on the analysis contained in this document. The analyses/methods documented in this report represent the combined efforts of individuals from RES and EPRI. Both organizations provided specialists in the use of fire PRA to support this work. The results from this combined effort do not constitute either a regulatory position or regulatory guidance.

In addition, NUREG/CR-6850 can be used for risk-informed, performance-based approaches and insights to support fire protection regulatory decision-making in general.

On 14-16 June 2005, NRC's Office of Nuclear Regulatory Research (RES) and EPRI conducted a joint public workshop for about 80 attendees at the EPRI NDE Center in Charlotte, NC. A second workshop was held the following year, on 24-26 May 2006, in NRC's Two White Flint North Auditorium in Rockville, MD. About 130 people attended the second workshop. Based on the positive public response to these two workshops, a more detailed training class was developed by the authors of NUREG/CR-6850. Two detailed training workshops were conducted in 2007: on 23-27 July and again on 27-30 August, both at EPRI in Palo Alto, CA. About 100 people attended each of these workshops. In 2008, two more workshops were held from 29 September through 2 October, and again from 17-20 November in Bethesda, MD, near NRC Headquarters. The two workshops attracted about 170 participants including domestic representatives from NRC Headquarters and all four regional offices, U.S. Department of Energy, National Aeronautics and Space Administration, EPRI, NPP licensees/utilities, Nuclear Steam Supply System vendors, consulting engineering firms, and universities. Also in

attendance were international representatives from Belgium, Canada, France, Japan, South Korea, Spain, and Sweden.

The material in this NUREG/CP was recorded at the workshops in 2008 and adapted by RES Fire Research Branch members for use as an alternative training method for those who were unable to physically attend the training sessions. This report can also serve as a refresher for those who attended one or more training sessions and would be useful preparatory material for those planning to attend a session.

NRC Disclaimer: This document's text and video content are intended solely for use as training tools. No portions of their content are intended to represent NRC conclusions or Regulatory Positions, and they should not be interpreted as such.

CONTENTS OF VOLUME 1

ABSTRACT iii
ACKNOWLEDGEMENTS vii
LIST OF ACRONYMS ix

OVERALL COURSE **1-1**

1 COURSE OVERVIEW **1-1**
1.1 INTRODUCTION 1-1
1.1.1 Background 1-1
1.1.2 How to Use These Volumes 1-4
1.1.3 EPRI Perspective 1-4
1.1.4 References 1-4
1.2 GENERAL PLANT INFORMATION 1-7
1.2.1 Overall Plant Description 1-7
1.2.2 Systems Description 1-7
1.2.2.1 Primary Coolant System 1-7
1.2.2.2 Chemical Volume Control and High Pressure Injection Systems 1-7
1.2.2.3 Residual Heat Removal System 1-9
1.2.2.4 Auxiliary Feedwater System 1-9
1.2.2.5 Electrical System 1-10
1.2.2.6 Other Systems 1-11
1.3 MODULE 1: PRA/HRA 1-24
1.4 MODULE 2: Electrical Analysis 1-25
1.5 MODULE 3: Fire Analysis 1-25
1.6 FORMAT OVERVIEW 1-26
1.6.1 Video Series 1-26
1.6.2 Exercises 1-26
1.6.3 General Comments Regarding This Course 1-29

2 INTRODUCTION SLIDES **2-1**
SESSION 1: NRC Welcome 2-1
SESSION 2: Fire Risk Requantification Project 2-5
SESSION 3a: Fire PRA Methodology and Course Structure 2-11

Contents OF VOLUME 1 (CONTINUED)

SESSION 3b: PRA/HRA Module Overview..... 2-20
SESSION 3c: Circuits/Electrical Module Overview..... 2-30
SESSION 3d: Fire Analysis Module Overview..... 2-36
SESSION 3e: Sample Exercises/Sample Plant..... 2-44
SESSION 4: Fire HRA Guidelines Overview..... 2-61

MODULE 1: PRA/HRA (SYSTEMS ANALYSIS)

PRA/HRA..... 3-1
INTRODUCTION..... 3-1
SESSION 1a: Fire PRA Component Selection..... 3-3
SESSION 1b: Example Exercises..... 3-20
SESSION 2: Fire Induced Risk Model Development..... 3-52
SESSION 3: Qualitative/Quantitative Screening..... 3-63
SESSION 4: Screening Post-Fire HRA..... 3-75
SESSION 5: Post-Fire HRA Detailed Analysis..... 3-81
SESSION 6: Fire Risk Quantification..... 3-89
SESSION 7: Uncertainty and Sensitivity Analysis..... 3-94

APPENDICES A-1

APPENDIX A: Questions Asked in Module 1 Sessions..... A-1
APPENDIX B: Sample Exercises Solutions (Module 1, Task 2)..... B-1

Acknowledgements

The authors of this report greatly appreciate the efforts and contributions made by Carli Follett, David Yates, and Thomas DeBold, summer interns from the University of Maryland's Fire Protection Engineering Department, during development of this NUREG/Conference Proceedings report. As part of their summer internship, they were tasked to analyze, evaluate, organize, and edit information in the videos of this report and to develop its first draft under direct supervision of the authors. They compiled all the video files and presentation materials used during the training sessions and used their knowledge to create, organize, edit, and deliver a user-friendly report of the highest quality possible.

We also acknowledge the other Fire Research Branch members Kendra Hill, Aixa Belen-Ojeda, Jason Dreisbach, Jessica Kratchman, Gabriel Taylor, J.S. Hyslop, and Mark Henry Salley for their support and contributions during its development. Their input and encouragement facilitated its timely completion and greatly benefited the final product.

In addition, we want to extend our gratitude to Nathan White and Thomas Kardaras of the Information Technology and Infrastructure Branch for their quick responses addressing all our computer needs and issues during development of the report. We greatly appreciate the support of Linda Stevenson (the agency publication specialist) and Guy Beltz (the agency printing specialist) whose invaluable support and expertise were critical to ensuring the published report's quality.

Also, several other 2009 Office of Nuclear Regulatory Research summer interns, specifically Minh Dang, Daniel Breedlove, Ashley Carnes, and Anders Gilbertson, made valuable contributions to this project, both technical and editorial, that contributed to its overall quality.

LIST OF ACRONYMS

ACB	Air-cooled Circuit Breaker
ACRS	Advisory Committee on Reactor Safeguards
AEP	Abnormal Event Procedure
AFW	Auxiliary Feedwater
AGS	Assistance General Supervisor
AOP	Abnormal Operating Procedure
AOV	Air Operated Valve
ATHEANA	A Technique for Human Event Analysis
ATS	Automatic Transfer Switch
ATWS	Anticipated Transient Without Scram
BAT	Boric Acid Tank
BNL	Brookhaven National Laboratory
BWR	Boiling-Water Reactor
CBDT	Causal Based Decision Tree
CCDP	Conditional Core Damage Probability
CF	Cable (Configuration) Factors
CCPS	Center for Chemical Process Safety
CCW	Component Cooling Water
CDF	Core Damage Frequency
CFD	Computational Fluid Dynamics
CFR	Code of Federal Regulations
CLERP	Conditional Large Early Release Probability
CM	Corrective Maintenance
CR	Control Room
CRS	Cable and Raceway (Database) System
CST	Condensate Storage Tank
CVCS	Chemical and Volume Control System
CWP	Circulating Water Pump
DC	Direct Current
EDG	Emergency Diesel Generator
EDS	Electrical Distribution System
EF	Error Factor
EI	Erroneous Status Indicator
EOP	Emergency Operating Procedure
EPR	Ethylene-Propylene Rubber
EPRI	Electric Power Research Institute

FEDB	Fire Events Database
FEP	Fire Emergency Procedure
FHA	Fire Hazards Analysis
FIVE	Fire-Induced Vulnerability Evaluation (EPRI TR 100370)
FMRC	Factory Mutual Research Corporation
FPRAIG	Fire PRA Implementation Guide (EPRI TR 105928)
FRSS	Fire Risk Scoping Study (NUREG/CR-5088)
FSAR	Final Safety Analysis Report
HEAF	High Energy Arcing Fault
HEP	Human Error Probability
HFE	Human Failure Event
HPI	High-Pressure Injection
HPCI	High-Pressure Coolant Injection
HRA	Human Reliability Analysis
HRR	Heat Release Rate
HTGR	High Temperature Gas-cooled Reactor
HVAC	Heating, Ventilation, and Air Conditioning
ICDP	Incremental Core Damage Probability
ILERP	Incremental Large Early Release Probability
INPO	Institute for Nuclear Power Operations
IPE	Individual Plant Examination
IPEEE	Individual Plant Examination of External Events
IS	Ignition Source
ISLOCA	Interfacing Systems Loss of Coolant Accident
KS	Key Switch
LCO	Limiting Condition of Operation
LERF	Large Early Release Frequency
LFL	Lower Flammability Limit
LOC	Loss of Control
LOCA	Loss-of-Coolant Accident
LPG	Liquefied Petroleum Gas
LWGR	Light-Water-cooled Graphite Reactors (Russian design)
MCB	Main Control Board
MCC	Motor Control Center
MCR	Main Control Room
MG	Motor-Generator
MFW	Main Feedwater
MOV	Motor-Operated Valve
MQH	McCaffrey, Quintiere and Harkleroad's Method
MS	Main Steam
MSIV	Main Steam Isolation Valve
NC	No Consequence
NEI	Nuclear Energy Institute
NEIL	Nuclear Electric Insurance Limited
NFPA	National Fire Protection Association
NPP	Nuclear Power Plant

NPSH	Net Positive Suction Head
NQ cable	Non-Qualified (IEEE-383) cable
NRC	U.S. Nuclear Regulatory Commission
P&ID	Piping and Instrumentation Diagram
PE	Polyethylene
PM	Preventive Maintenance
PMMA	Polymethyl Methacrylate
PORV	Power-Operated Relief Valve
PRA	Probabilistic Risk Assessment
PSF	Performance Shaping Factor
PTS	Pressurized Thermal Shock
PVC	Polyvinyl Chloride
PWR	Pressurized-Water Reactor
Q cable	Qualified (IEEE-383) cable
RBMK	Reactor Bolshoy Moshchnosty Kanalny (high-power channel reactor)
RCIC	Reactor Core Isolation Cooling
RCP	Reactor Coolant Pump
RCS	Reactor Coolant System
RDAT	Computer program for Bayesian analysis
RES	Office of Nuclear Regulatory Research (at NRC)
RHR	Residual Heat Removal
RI/PB	Risk-Informed / Performance-Based
RPS	Reactor Protection System
RWST	Refueling Water Storage Tank
SCBA	Self-Contained Breathing Apparatus
SDP	Significance Determination Process
SGTR	Steam Generator Tube Rupture
SI	Safety Injection
SMA	Seismic Margin Assessment
SNPP	Simplified Nuclear Power Plant
SO	Spurious Operation
SOV	Solenoid Operated Valve
SRV	Safety Relief Valve
SSD	Safe Shutdown
SSEL	Safe Shutdown Equipment List
SST	Station Service Transformer
SUT	Start-up Transformer
SW	Service Water
SWGR	Switchgear
T/G	Turbine/Generator
THERP	Technique for Human Error Rate Prediction
TGB	Turbine-Generator Building
TSP	Transfer Switch Panel
UAT	Unit Auxiliary Transformer
VCT	Volume Control Tank
VTT	Valtion Teknillinen Tutkimuskeskus (Technical Research Centre of Finland)

VVER	The Soviet (and now, Russian Federation) designation for light-water pressurized reactor
XLPE	Cross-Linked Polyethylene
ZOI	Zone of Influence

OVERALL COURSE

1 COURSE OVERVIEW

1.1 INTRODUCTION

1.1.1 Background

The U.S. Nuclear Regulatory Commission (NRC) and Electric Power Research Institute (EPRI), under a Memorandum of Understanding (MOU) on Cooperative Nuclear Safety Research, have been developing state-of-the-art methods for the conduct of fire probabilistic risk assessments (PRAs). In September 2005, this work produced the joint EPRI and NRC report, "EPRI/NRC-RES Fire PRA Methodology for Nuclear Power Facilities," EPRI 1011989 and NUREG/CR 6850.

The course/seminar described in the three volumes of this NUREG/CP-0194 has been created to train interested parties in the application of that fire PRA methodology. The course/seminar is presented in the following three parallel parts:

- Module 1: PRA/Human Reliability Assessment (HRA) – This module covers the technical tasks for development of the system and operator response to a fire. Specifically, this module covers EPRI 1011989, NUREG/CR-6850, Volume 2, Sections (Technical Tasks) 2, 4, 5, 7, 12, 14, 15, and 16.
- Module 2: Electrical Analysis – This module covers the technical tasks for analysis of electrical failures as the result of a fire. Specifically, this module covers EPRI 1011989, NUREG/CR-6850, Volume 2, Sections (Technical Tasks) 3, 9, and 10.
- Module 3: Fire Analysis – This module covers technical tasks involved in development of fire scenarios from initiation to target (e.g., cable) impact. Specifically, this module covers EPRI 1011989, NUREG/CR-6850, Volume 2, Sections (Technical Tasks) 1, 6, 8, 11, and 13.

Integral to the course is a set of hands-on exercises based on a fictitious Simplified Nuclear Power Plant (SNPP). The same SNPP is used in all three modules. Clearly, the power plant defined in this package is an extremely simplified one that in many cases does not meet regulatory requirements or good engineering practices. Design features are focused on bringing forward various aspects of the fire PRA methodology.

This Volume 1 includes a general description of the SNPP and the internal events (i.e., non-fire) PRA needed as input for application of the fire PRA methodology. The instructions for specific technical tasks are organized by modules (see above). A short description of all of the technical tasks is provided below. For further details, refer to the individual fire PRA technical task descriptions in EPRI 1011989, NUREG/CR-6850, Volume 2.

- ***Plant Boundary Definition and Partitioning (Task 1).*** The first step in applying the fire PRA methodology is to define the physical boundary of the analysis and to divide the area within that boundary into analysis compartments.

- ***Fire PRA Component Selection (Task 2).*** The selection of components that are to be credited for plant shutdown following a fire is a critical step in any fire PRA. Components selected would generally include many but not necessarily all components credited in the 10 CFR 50 Appendix R post-fire safe shutdown (SSD) analysis. Additional components will likely be selected, potentially including most but not all components credited in the plant's internal events PRA. Also, the proposed methodology would likely introduce components beyond either the 10 CFR 50 Appendix R list or the internal events PRA model. Such components are often of interest due to considerations of multiple spurious actuations that may threaten the credited functions and components, as well as due to concerns about fire effects on instrumentation used by the plant crew to respond to the event.

- ***Fire PRA Cable Selection (Task 3).*** This task provides instructions and technical considerations associated with identifying cables supporting those components selected in Task 2 above. In previous fire PRA methods (such as EPRI FIVE and Fire PRA Implementation Guide), this task was relegated to the SSD analysis and its associated databases. EPRI 1011989, NUREG/CR-6850 offers a more structured set of rules for selection of cables.

- ***Qualitative Screening (Task 4).*** This task identifies fire analysis compartments that can be shown, without quantitative analysis, to have little or no risk significance. Fire compartments may be screened out if they contain no components or cables identified in Tasks 2 and 3 and if they cannot lead to a plant trip because of either plant procedures, an automatic trip signal, or technical specification requirements.

- ***Plant Fire-Induced Risk Model (Task 5).*** This task discusses steps for the development of a logic model that reflects plant response following a fire. Specific instructions have been provided for treatment of fire-specific procedures or preplans. These procedures may impact availability of functions and components or include fire-specific operator actions (e.g., self-induced station blackout).

- ***Fire Ignition Frequency (Task 6).*** This task describes the approach to develop frequency estimates for fire compartments and scenarios. Significant changes from the EPRI FIVE method have been made in this task. The changes generally relate to use of challenging events, considerations associated with data quality, and increased use of a fully component-based ignition frequency model (as opposed to the location/component-based model used, for example, in FIVE).

- ***Quantitative Screening (Task 7).*** A fire PRA allows the screening of fire compartments and scenarios based on their contribution to fire risk. This approach considers the cumulative risk associated with the screened compartments (i.e., the ones not retained for detailed analysis) to ensure that a true estimate of fire risk profile (as opposed to vulnerability) is obtained.

- ***Scoping Fire Modeling (Task 8).*** This step provides simple rules to define and screen fire ignition sources (and therefore fire scenarios) in an unscreened fire compartment.

- ***Detailed Circuit Failure Analysis (Task 9).*** This task provides an approach and technical considerations for identifying how the failure of specific cables will impact the components included in the fire PRA SSD plant response model.

- ***Circuit Failure Mode Likelihood Analysis (Task 10).*** This task considers the relative likelihood of various circuit failure modes. This added level of resolution may be a desired

option for those fire scenarios that are significant contributors to the risk. The methodology provided in EPRI 1011989, NUREG/CR-6850 benefits from the knowledge gained from the tests performed in response to the circuit failure issue.

- ***Detailed Fire Modeling (Task 11).*** This task describes the method to examine the consequences of a fire. This includes consideration of scenarios involving single compartments, multiple fire compartments, and the main control room. Factors considered include initial fire characteristics, fire growth in a fire compartment or across fire compartments, detection and suppression, electrical raceway fire barrier systems, and damage from heat and smoke. Special consideration is given to turbine generator (T/G) fires, hydrogen fires, high-energy arcing faults, cable fires, and main control board (MCB) fires. Considerable improvements can be found in the method for this task over the EPRI FIVE and Fire PRA Implementation Guide in nearly all technical areas.

- ***Post-Fire Human Reliability Analysis (Task 12).*** This task considers operator actions for manipulation of plant components. The analysis task procedure provides structured instructions for identification and inclusion of these actions in the fire PRA. The procedure also provides instructions for estimating screening human error probabilities (HEPs) before detailed fire modeling results (e.g., fire growth and damage behaviors) have necessarily been developed or detailed circuit analyses (e.g., can the circuit spuriously actuate as opposed to simply assuming it can actuate) have been completed. In a fire PRA, the estimation of HEP values with high confidence is critical to the effectiveness of screening. This report does not develop a detailed fire HRA methodology. A number of HRA methods can be adopted for fire with appropriate additional instructions that superimpose fire effects on any of the existing HRA methods such as the Technique for Human Error Rate Prediction (THERP), Causal Based Decision Tree (CBDT), A Technique for Human Event Analysis (ATHEANA), etc. This would improve consistency across analyses (i.e., fire and internal events PRA).

- ***Seismic Fire Interactions (Task 13).*** This task is a qualitative approach to help identify the risk from any potential interactions between an earthquake and a fire.

- ***Fire Risk Quantification (Task 14).*** The task summarizes what is to be done for quantification of the fire risk results.

- ***Uncertainty and Sensitivity Analyses (Task 15).*** This task describes the approach to follow for identifying and treating uncertainties throughout the fire PRA process. The treatment may vary from quantitative estimation and propagation of uncertainties where possible (e.g., in fire frequency and nonsuppression probability) to identification of sources without quantitative estimation. The treatment may also include one-at-a-time variation of individual parameter values or modeling approaches to determine the effect on the overall fire risk (i.e., sensitivity analysis).

- ***Fire PRA Documentation (Task 16).*** This task describes the approach to follow for documenting the Fire PRA process and its results.

Figure 1 shows the relationship between the above 16 technical tasks from EPRI 1011989, NUREG/CR-6850, Volume 2.

1.1.2 How to Use These Volumes

These three volumes are intended to provide the background information necessary to perform the exercise sets of the course/seminar and, ultimately, to participate in performing fire PRAs for NPPs. Please note:

1. All course/seminar attendees were expected to review Section 1.2 of this Volume 1 and become familiar with the power plant (i.e., the SNPP) defined in that section.
2. The instructors of each module provided questions or case study exercise sets and guided the attendees to material relevant to each specific exercise set. Attendees were expected to review that relevant material and use the information or examples provided to complete the assigned exercise sets.
3. Attendees were directed not to make any additional assumptions in terms of equipment, systems, or plant layout other than those presented in the exercise without consulting the instructor.

1.1.3 EPRI Perspective

"Methods for Applying Risk Analysis to Fire Scenarios (MARIAFIRES)" is a collection of the materials that are presented at the fire PRA course provided by EPRI and RES. The training and resulting presentation material is detailed and represents in excess of 60 hours of classroom instruction. The training focuses on the fire PRA methods documented in the joint EPRI/NRC RES publication 1011989 and NUREG/CR-6850 along with clarifications, enhancements, and additions provided via the frequently asked question (FAQ) process for NFPA 805.

The intent of the publication is to provide to the public the training material used at the fire PRA training. This material is not intended to be a substitute for direct interaction that is provided in the periodically offered fire PRA courses; rather, it is meant to augment that training and to serve as a reference. Enthusiastic future students can use the material to become familiar with the general principles of fire PRA prior to arrival at the course. Students who have already taken the course can use the material for reference. The material consists of a series of reports that document the presentations including some speakers' notes and text. In addition, an edited version of a recorded training session is also available via a separate product number. This video version can be used in a similar manner to the documentation (e.g., for reference or in preparation for the course) and includes the actual recorded and edited course.

In providing this material, it is hoped that those who plan to attend the course can arrived more informed, those who have already attended can have a reference, and those who have been unable to attend have a resource to gain a more complete understanding of the intent and goals of EPRI 1011989 and NUREG/CR-6850.

1.1.4 Reference

EPRI 1011989, NUREG/CR-6850, "*EPRI/NRC-RES Fire PRA Methodology for Nuclear Power Facilities*," September 2005.

Figure 1 - Relationship of Technical Tasks in NUREG/CR-6850, Volume 2

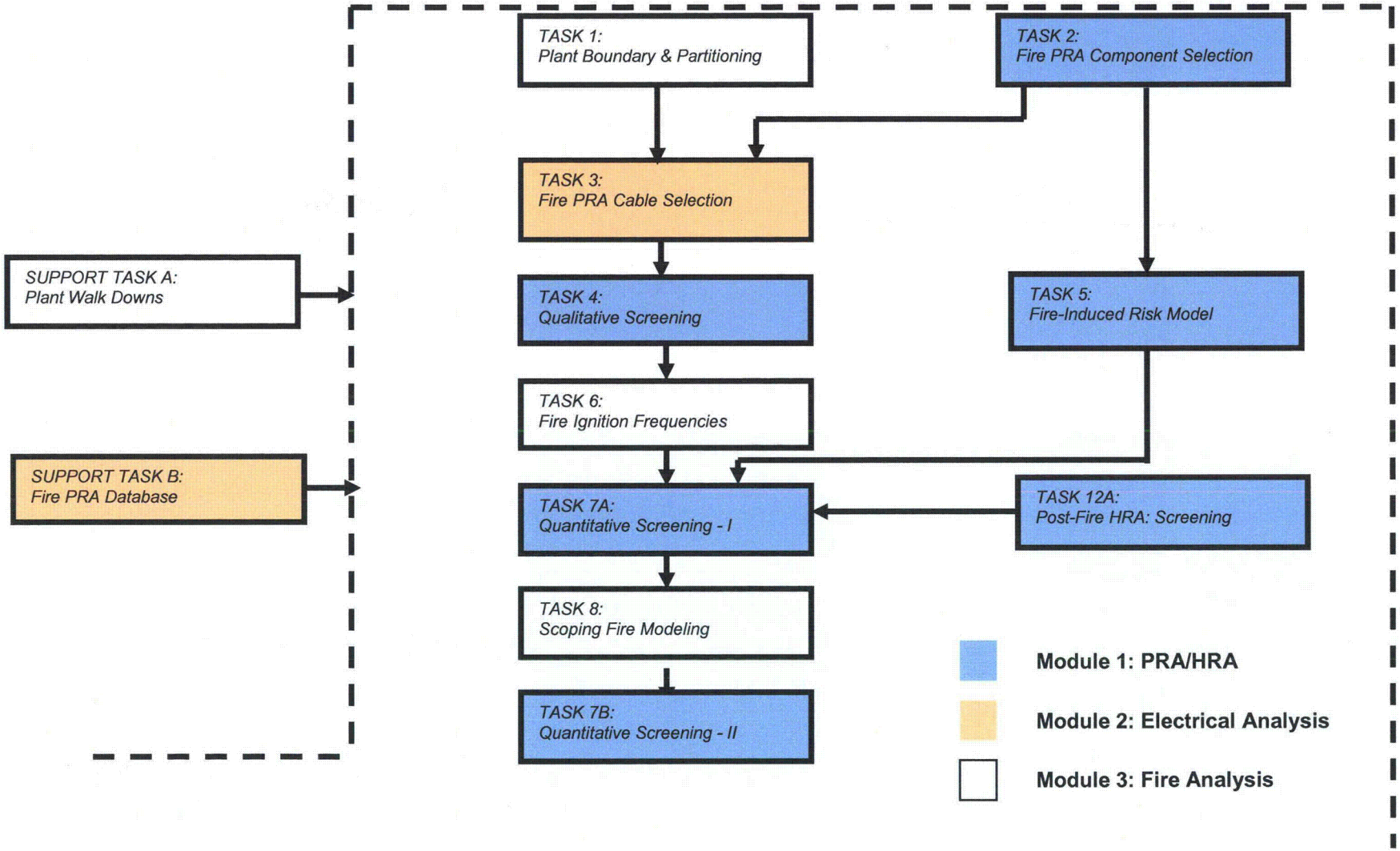

Figure 1 (continued)

Note: "B" is from Task 7B, prev. pg.

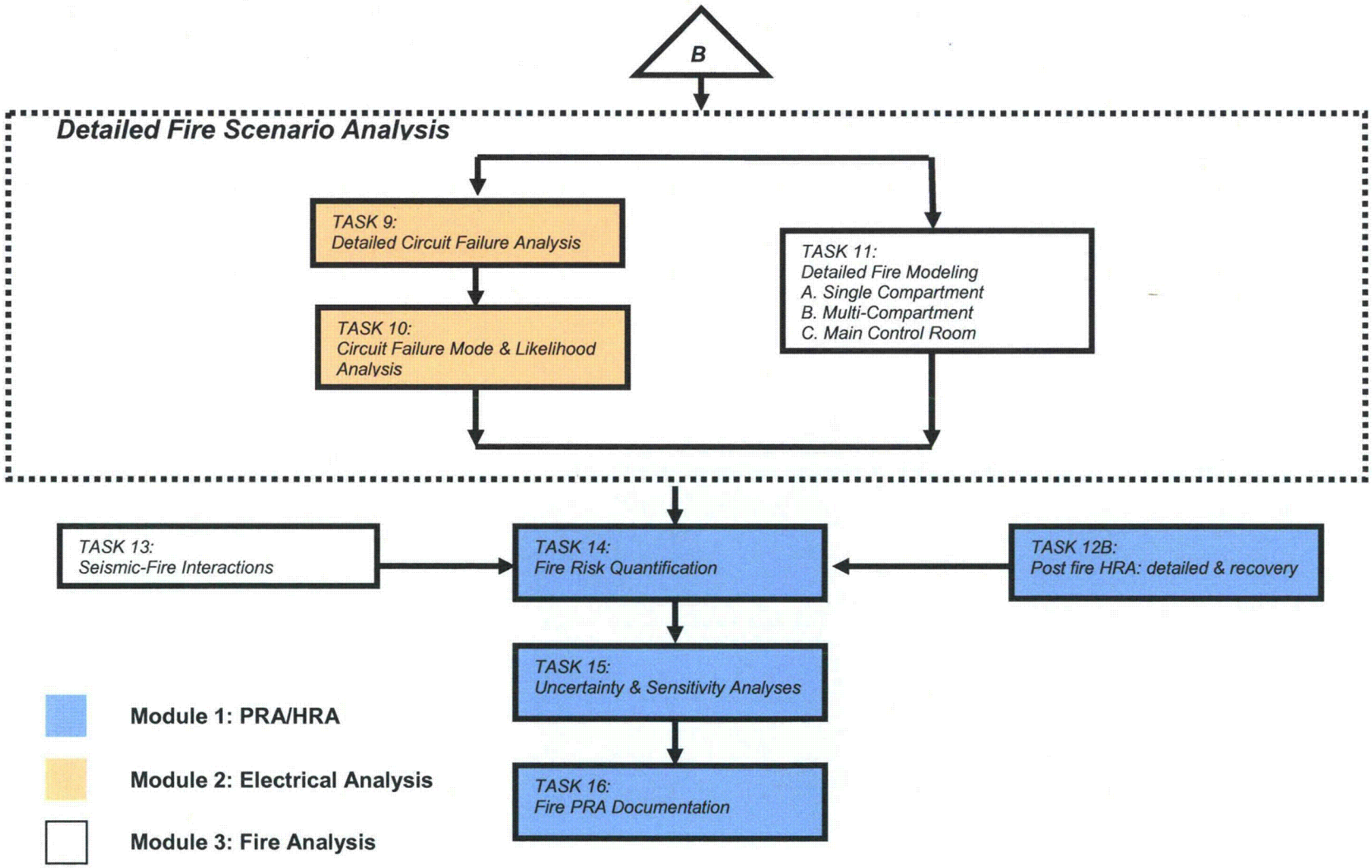

1.2 GENERAL PLANT INFORMATION

1.2.1 Overall Plant Description

The following notes generally describe the SNPP, including its layout:

1. The plant is a pressurized-water reactor (PWR) consisting of one primary coolant loop that consists of one steam generator, one reactor coolant pump, and the pressurizer. A chemical volume control system and multiple train injection system as well as a single train residual heat removal system interface with the primary system.
2. The secondary side of the plant contains a main steam and feedwater loop associated with the single steam generator and a multiple train auxiliary feedwater system to provide decay heat removal.
3. The operating conditions and parameters of this plant are similar to that of a typical PWR. For example, the primary side runs at about 2,200 psi pressure. The steam generator can reject the decay heat after a reactor trip. There is a possibility of feed and bleed, etc.
4. It is assumed that the reactor is initially at 100-percent power.
5. The plant is laid out in accordance with Figures 2 through 10. The plant consists of a Containment Building, Auxiliary Building, Turbine Building, Diesel Generator Building, and the Yard. All other buildings and plant areas are shown, but no details are provided.

1.2.2 Systems Description

This section provides a more detailed description of the various systems within the plant addressed in the case studies. Each system is described separately.

1.2.2.1 Primary Coolant System

The following notes and Figure 11 define the primary coolant system:

1. The primary coolant loop consists of the reactor vessel, one reactor coolant pump, and one steam generator and the pressurizer, along with associated piping.
2. The pressurizer is equipped with a normally closed power-operated relief valve (PORV), which is an air-operated valve (AOV-1) with its pilot solenoid operated valve (SOV-1). There is also a normally open motor-operated block valve (MOV-13) upstream of the PORV.
3. The pressure transmitter (PT-1) on the pressurizer provides the pressure reading for the primary coolant loop and is used to signal a switch from the chemical and volume control system (CVCS) to the high-pressure injection (HPI) configuration.
4. A nitrogen bottle provides the necessary pressurized gas to operate the PORV in case of loss of plant air.

1.2.2.2 Chemical Volume Control and High-Pressure Injection Systems

The following notes and Figure 11 define the shared CVCS and HPI system:

1. The CVCS normally operates during power generation.

2. Valve type and position information include:

Valve	Type	Status on Loss of Power (or Air as applicable)	Position During Normal Operation
AOV-2	Air-Operated Valve	Fail Closed	Open
AOV-3	Air-Operated Valve	Fail Closed	Open
MOV-1	Motor-Operated Valve	Fail As Is	Closed
MOV-2	Motor-Operated Valve	Fail As Is	Open
MOV-3	Motor-Operated Valve	Fail As Is	Closed
MOV-4	Motor-Operated Valve	Fail As Is	Closed
MOV-9	Motor-Operated Valve	Fail As Is	Closed

3. One of the two HPI pumps runs when the CVCS is operating.
4. One of the two HPI pumps is sufficient to provide all injection needs after a reactor trip and all postulated accident conditions.
5. HPI and CVCS use the same set of pumps.
6. On a need for safety injection, the following lineup takes place automatically:
   - AOV-2 and AOV-3 close.
   - MOV-5 and MOV-6 open.
   - MOV-2 closes.

Both HPI pumps receive start signal, the stand-by pump starts, and the operating pump continues operating.

   - MOV-1 and MOV-9 open.

7. The HPI is used for recirculating sump water after a loss-of-coolant accident (LOCA) using the pathway involving MOV-3 and MOV-4. For recirculation, the operator manually opens MOV-3 and MOV-4 and closes MOV-5 and MOV-6 upon proper indication of low refueling water storage tank (RWST) level and sufficient sump level.
8. RWST provides the necessary cooling water for the HPI pumps. It has enough capacity to depressurize the primary loop for residual heat removal (RHR) cooling.
9. There are level indications of the RWST and containment sump levels that are used by the operator to know when to switch from high-pressure injection to recirculation cooling mode.

10. The air compressor provides the motive power for operating the AOVs, but the detailed connections to the various valves are not shown (nor needed for exercises).

1.2.2.3 Residual Heat Removal System

The following notes and Figure 11 define the RHR system:

1. The design pressure of the RHR system downstream of MOV-8 is low.
2. Valve type and position information include:

Valve	Type	Status on Loss of Power	Position During Normal Operation
MOV-7	Motor-Operated Valve	Fail As Is	Closed
MOV-8	Motor-Operated Valve	Fail As Is	Closed

3. Operators have to align the system for low-pressure cooling after reactor vessel depressurization from the control room by opening MOV-7 and MOV-8, turning the RHR pump on, and establishing cooling in the RHR heat exchanger.

1.2.2.4 Auxiliary Feedwater System

The following notes and Figure 12 define the auxiliary feedwater (AFW) system:

1. One of three pumps of the AFW system can provide the necessary secondary side cooling for reactor heat removal after a reactor trip.
2. Pump AFW-B is steam turbine driven.
3. Valve type and position information include:

Valve	Type	Status on Loss of Power	Position During Normal Operation
MOV-10	Motor-Operated Valve	Fail As Is	Closed
MOV-11	Motor-Operated Valve	Fail As Is	Closed
MOV-14	Motor-Operated Valve	Fail As Is	Closed
MOV-15	Motor-Operated Valve	Fail As Is	Closed
MOV-16	Motor- Operated Valve	Fail As Is	Closed

MOV-17	Motor-Operated Valve	Fail As Is	Closed
MOV-18	Motor-Operated Valve	Fail As Is	Closed
MOV-19	Motor–Operated Valve	Fail As Is	Closed

4. Upon a plant trip, main feedwater isolates and AFW automatically initiates by starting AFW-A and AFW-C pumps, opening the steam valves MOV-14 and MOV-15 to operate the AFW-B steam-driven pump, and opening valves MOV-10, MOV-11, and MOV-18.
5. The condensate storage tank (CST) has sufficient capacity to provide core cooling until cold shutdown is achieved.
6. The test return paths through MOVs-16, 17, and 19 are low-flow lines and do not represent significant diversions of AFW flow even if the valves are open.
7. There is a high motor temperature alarm on AFW pump A. Upon indication in the control room, the operator is to stop the pump immediately and have the condition subsequently checked by dispatching a local operator.
8. The atmospheric relief valve opens, as needed, automatically to remove decay heat if/should the main condenser path be unavailable.
9. The connections to the main turbine and main feedwater are shown in terms of one main steam isolation valve (MSIV) and a check valve. Portions of the plant beyond these interfacing components will not be addressed in the course.

1.2.2.5 Electrical System

Figure 13 is a one-line diagram of the electrical distribution system (EDS). Safety-related buses are identified by the use of alphabetic letters (e.g., SWGR-A, MCC-B1, etc.) while the nonsafety buses use numbers as part of their designations (e.g., SWGR-1 and MCC-2).

The safety-related portions of the EDS include 4160-volt switchgear buses SWGR-A and SWGR-B that are normally powered from the startup transformer SUT-1. In the event that offsite power is lost, these switchgears receive power from emergency diesel generators EDG-A and EDG-B. The 480-volt safety-related load centers (LC-A and LC-B) receive power from the switchgear buses via station service transformers SST-A and SST-B. The motor control centers (MCC-A1 and MCC-B1) are powered directly from the load centers. The MCCs provide motive power to several safety-related motor-operated valves (MOVs) and to DC buses DC BUS-A and DC BUS-B via battery chargers BC-A and BC-B. The two 125 VDC batteries, BAT-A and BAT-B, supply power to the DC buses in the event that all AC power is lost. DC control power for the 4160 safety-related switchgear is provided through distribution panels PNL-A and PNL-B. The 120 VAC vital loads are powered from buses VITAL-A and VITAL-B that in turn receive their power from the DC buses through inverters INV-A and INV-B.

The nonsafety portions of the EDS reflect a similar hierarchy of power flow; however, important differences exist. For example, 4160-volt SWGR-1 and SWGR-2 are normally energized from

the unit auxiliary transformer (UAT-1) with backup power available from SUT-1. A cross-tie breaker allows one nonsafety switchgear bus to provide power to the other. Nonsafety load centers LC-1 and LC-2 are powered at 480 volts from the 4160-volt switchgear via SST-1 and SST-2. These load centers provide power directly to the nonsafety MCCs. The nonvital DC bus (DC BUS-1) can be powered from either MCC via an automatic transfer switch (ATS-1) and battery charger BC-1 or directly from the 250-volt DC battery BAT-1.

1.2.2.6 Other Systems

The following systems and equipment are mentioned in the plant description but not explicitly included in the fire PRA:

- Service Water (SW). Provides cooling to recirculating and residual heat removal heat exchangers – assumed to be available at all times.
- Component Cooling Water (CCW). Provides cooling to letdown heat exchanger – assumed to be available at all times.
- It is assumed that the control rods can successfully insert and shutdown the reactor under all conditions.
- It is assumed that the ECCS and other AFW-related instrumentation and control circuits (other than those specifically noted in the diagrams) exist and are perfect such that in all cases they would sense the presence of a LOCA or otherwise a need to trip the plant and provide safety injection and auxiliary feedwater by sending the proper signals to the affected components (i.e., close valves and start pumps, insert control rods, etc.)

Figure 2 - SNPP General Layout

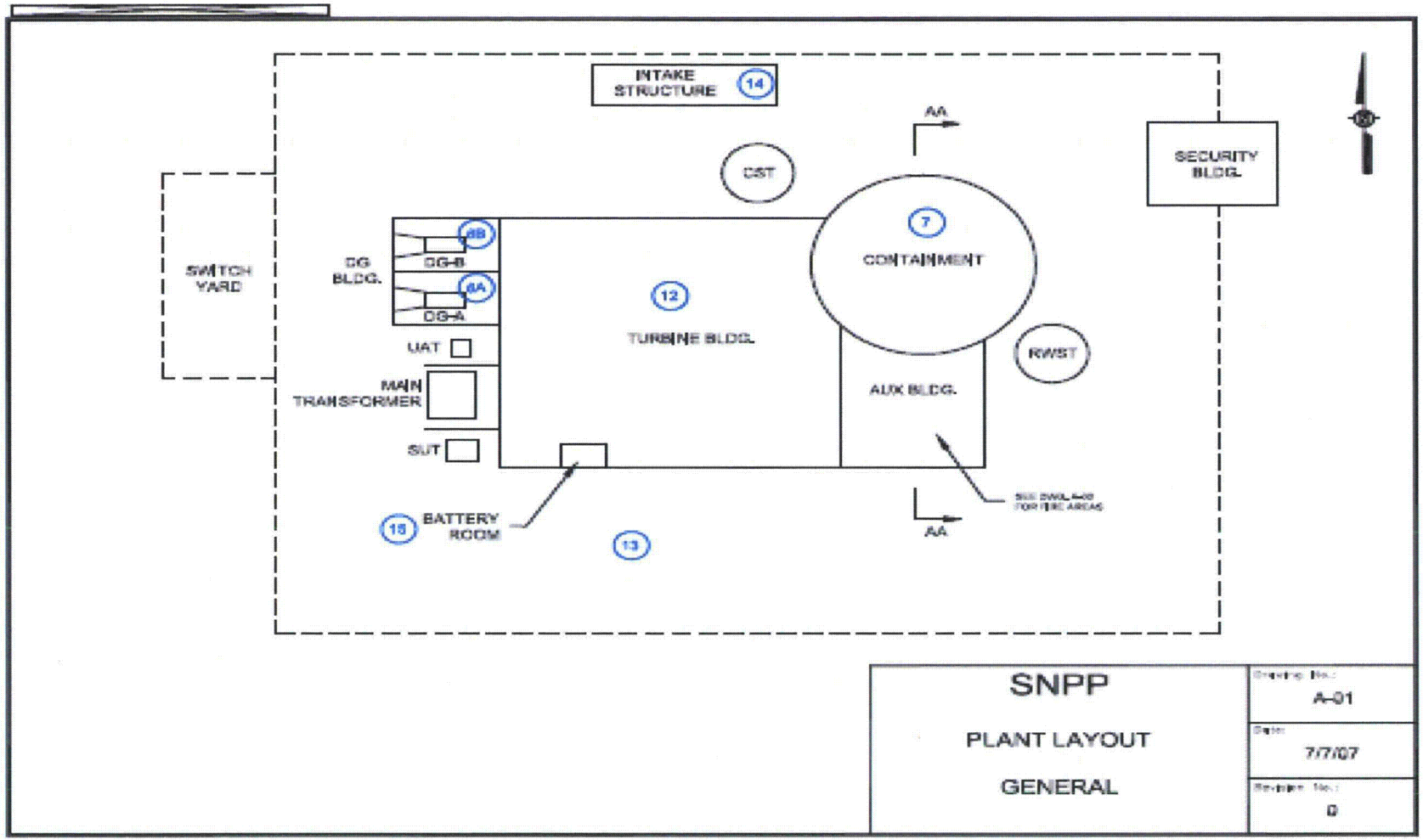

Figure 3 - SNPP Plant Layout Section AA

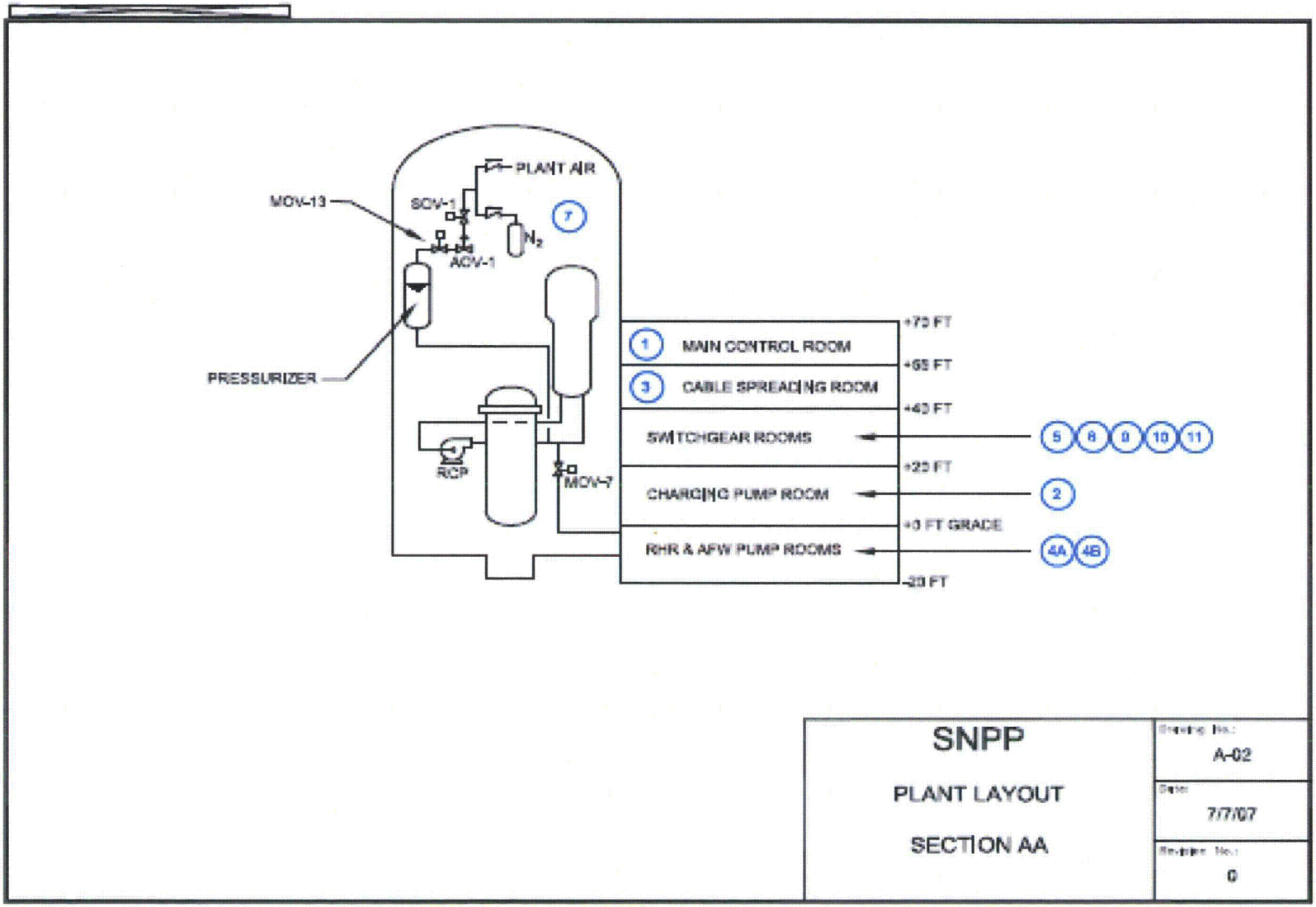

Figure 4 - SNPP Aux Building Layout at Elevation Minus 20 ft

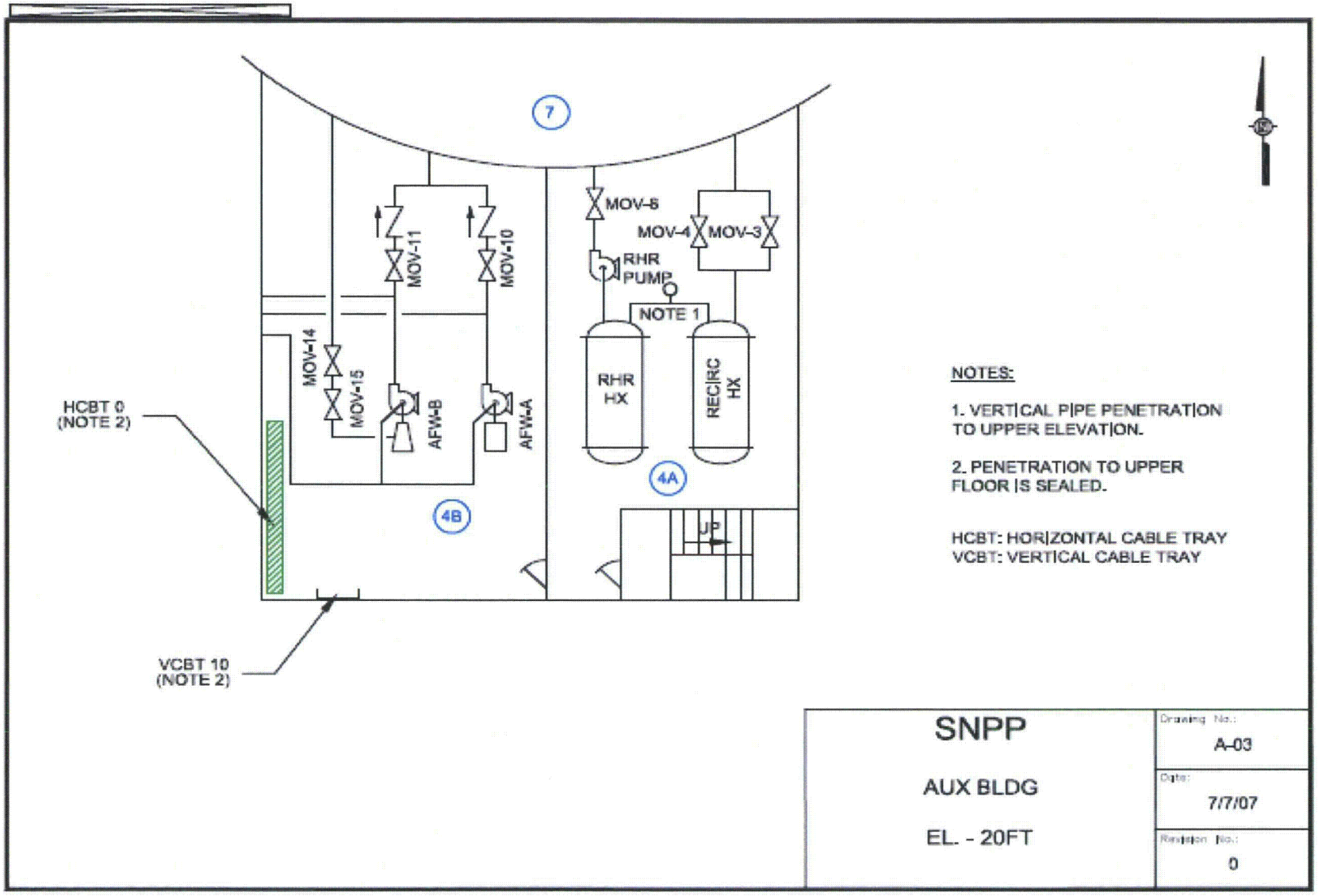

Figure 5 - SNPP Aux Building Layout 0 ft

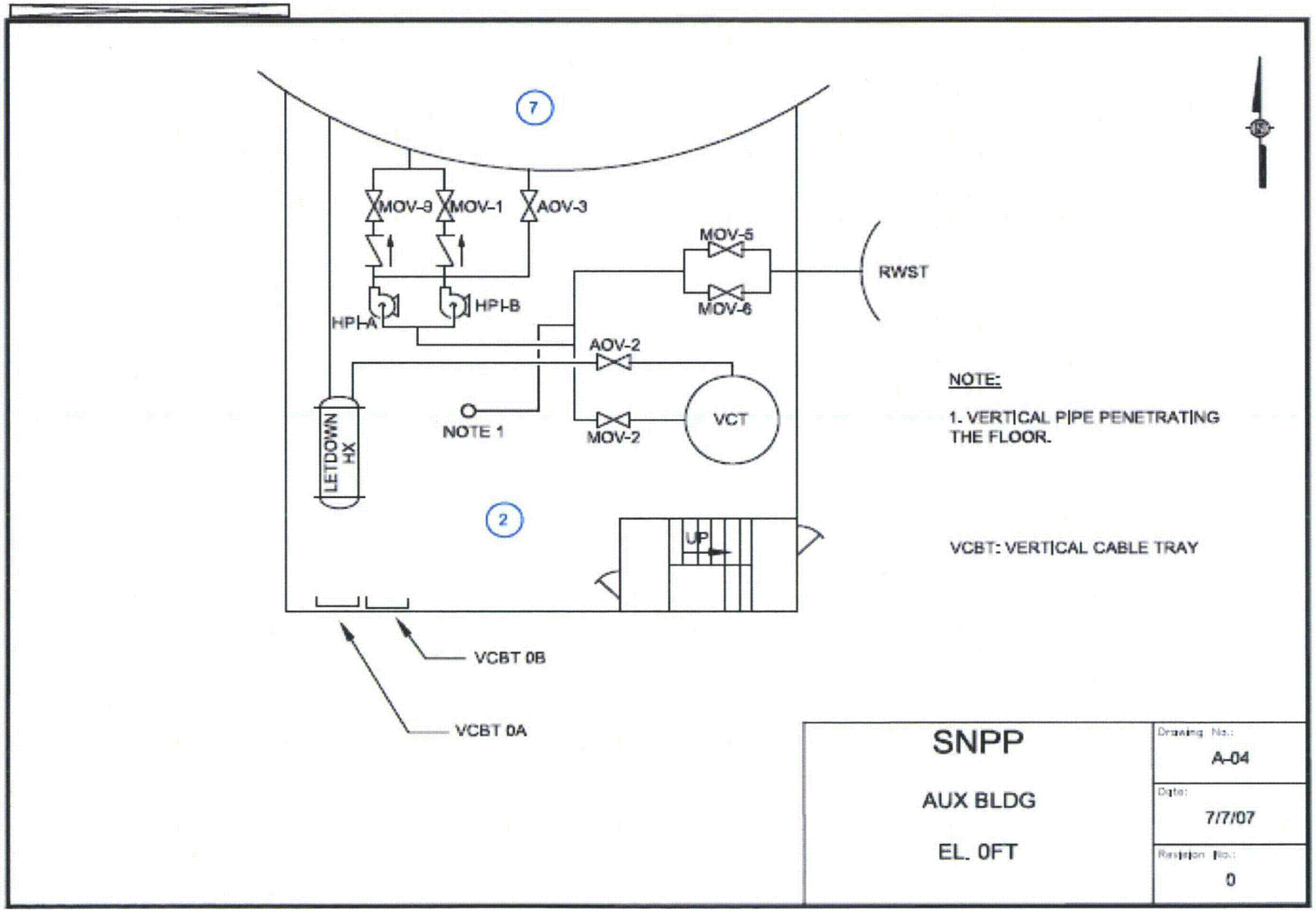

Figure 6 - SNPP Aux Building Layout +20 ft

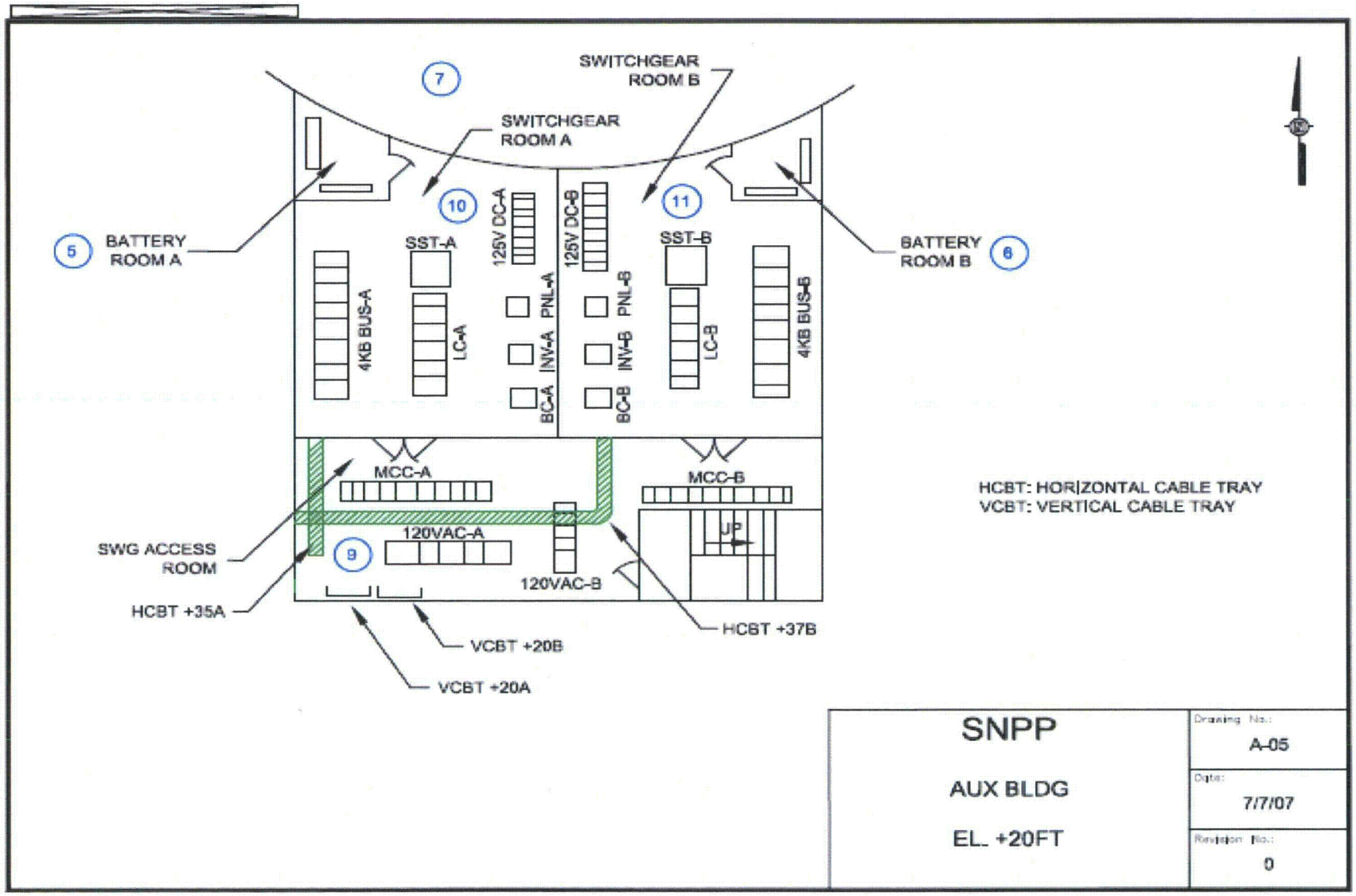

Figure 7- SNPP Aux Building Layout +40 ft

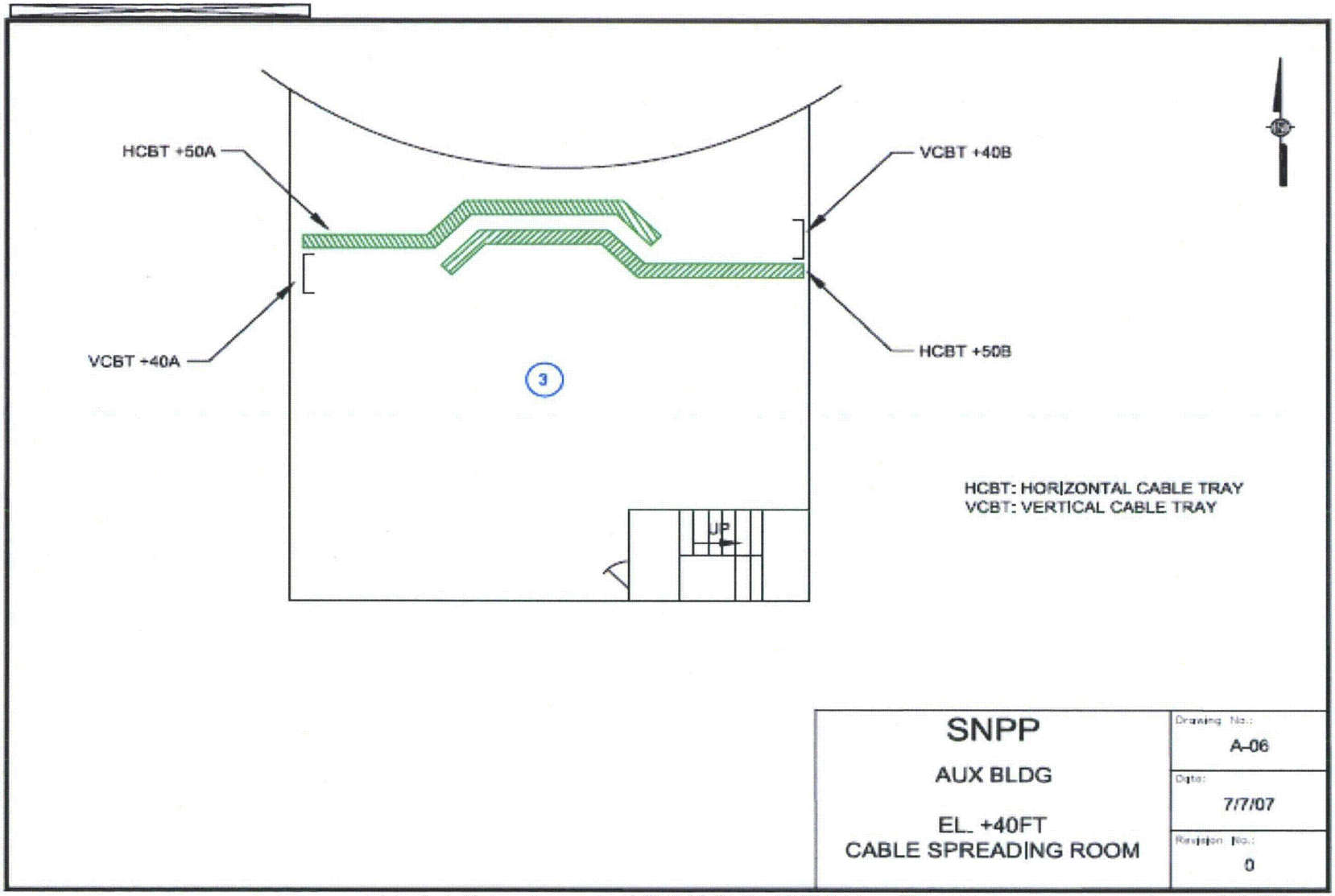

Figure 8 - SNPP Aux Building Main Control Room

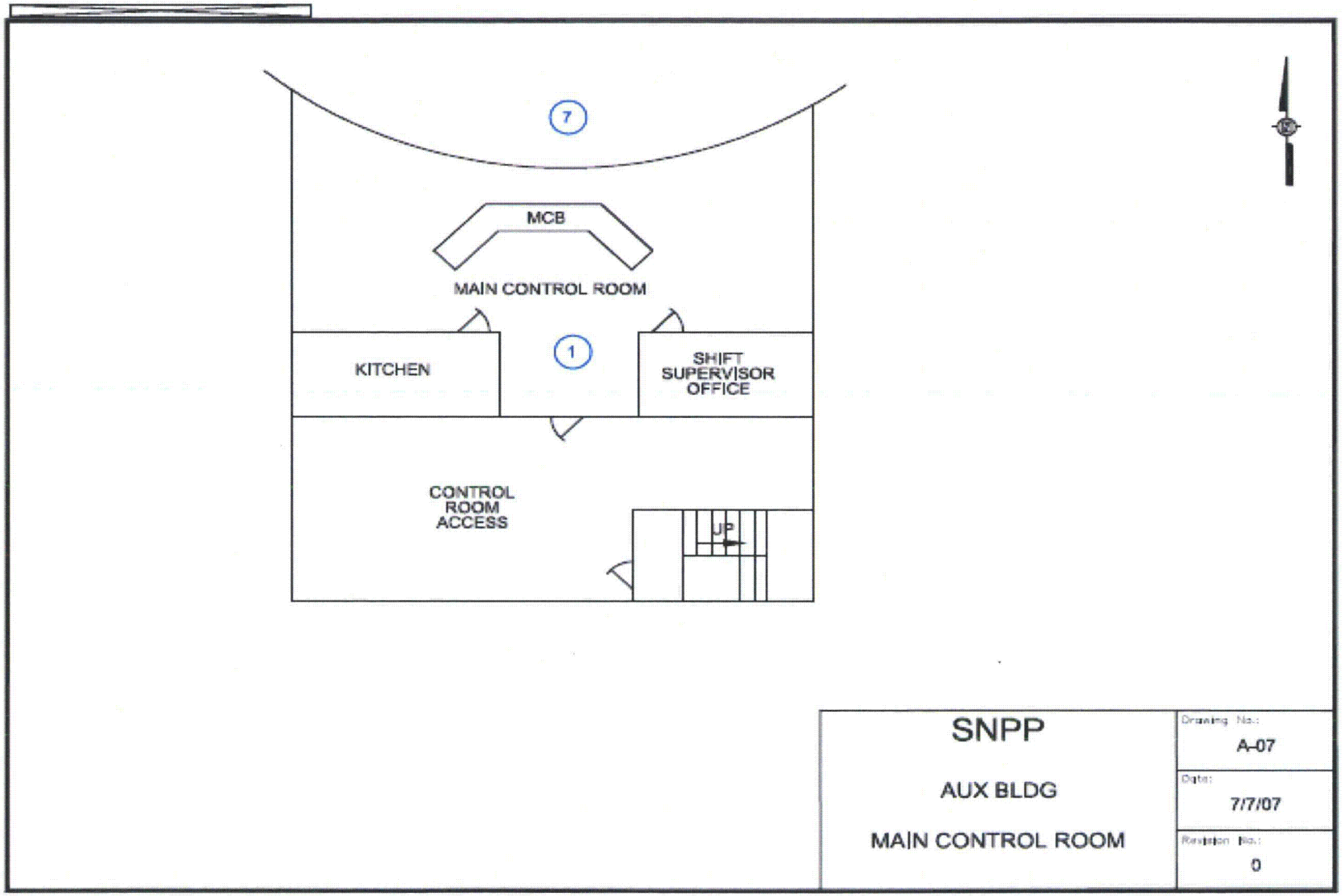

Figure 9 - SNPP Turbine building

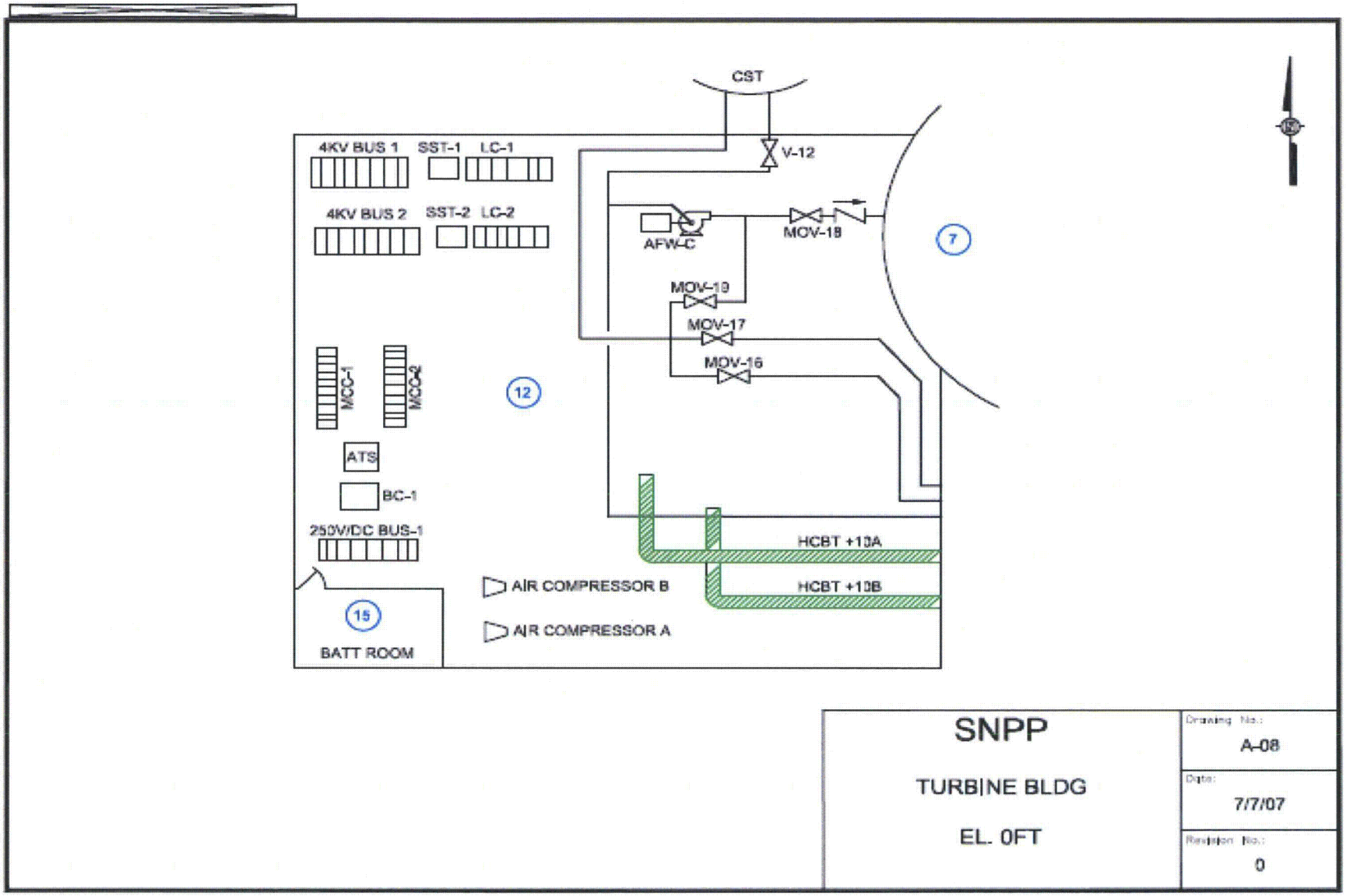

Figure 10 - SNPP Main Control Room

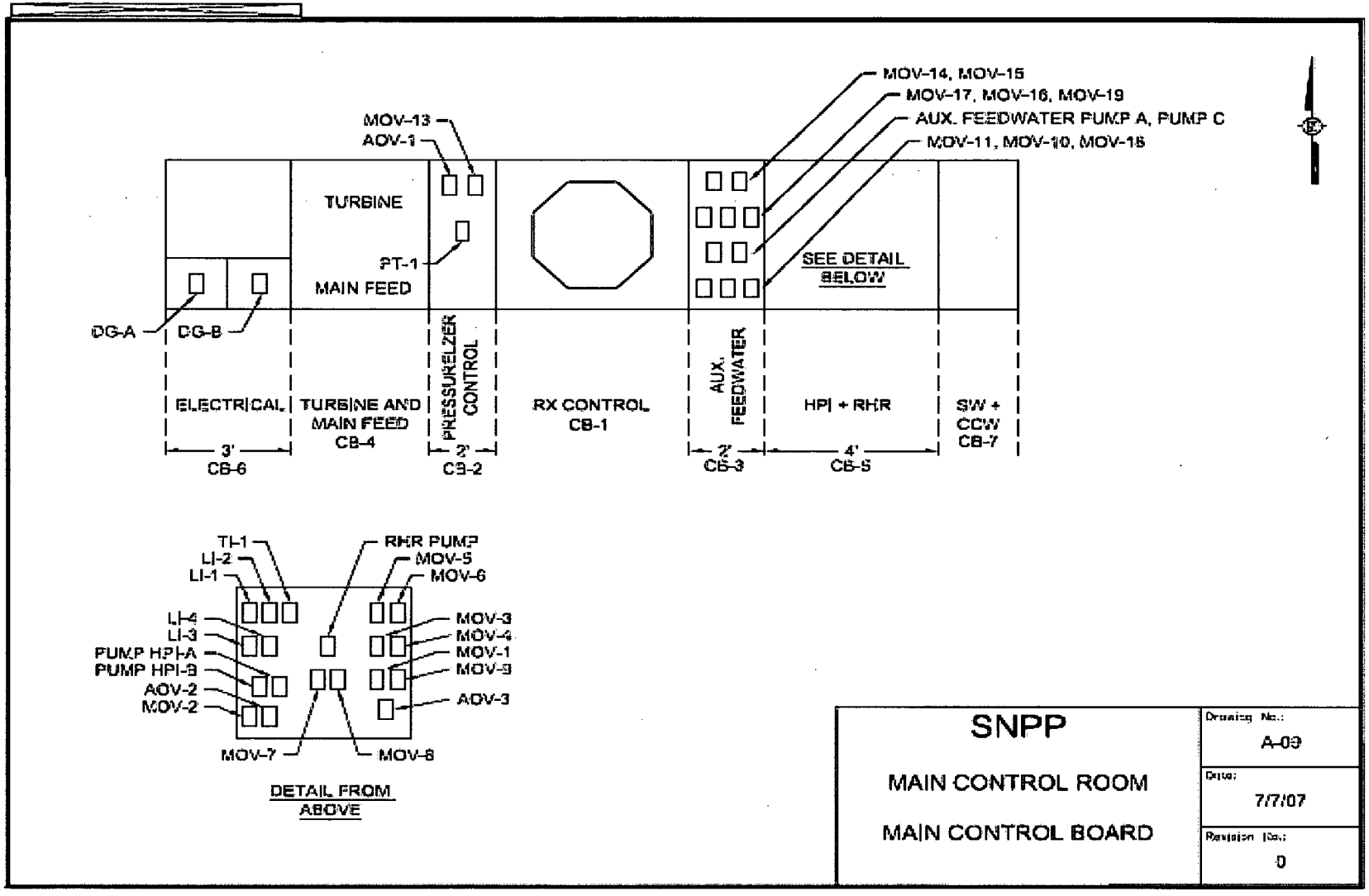

Figure 11 – Primary Coolant System Including RHR, HPI, and CVC Systems

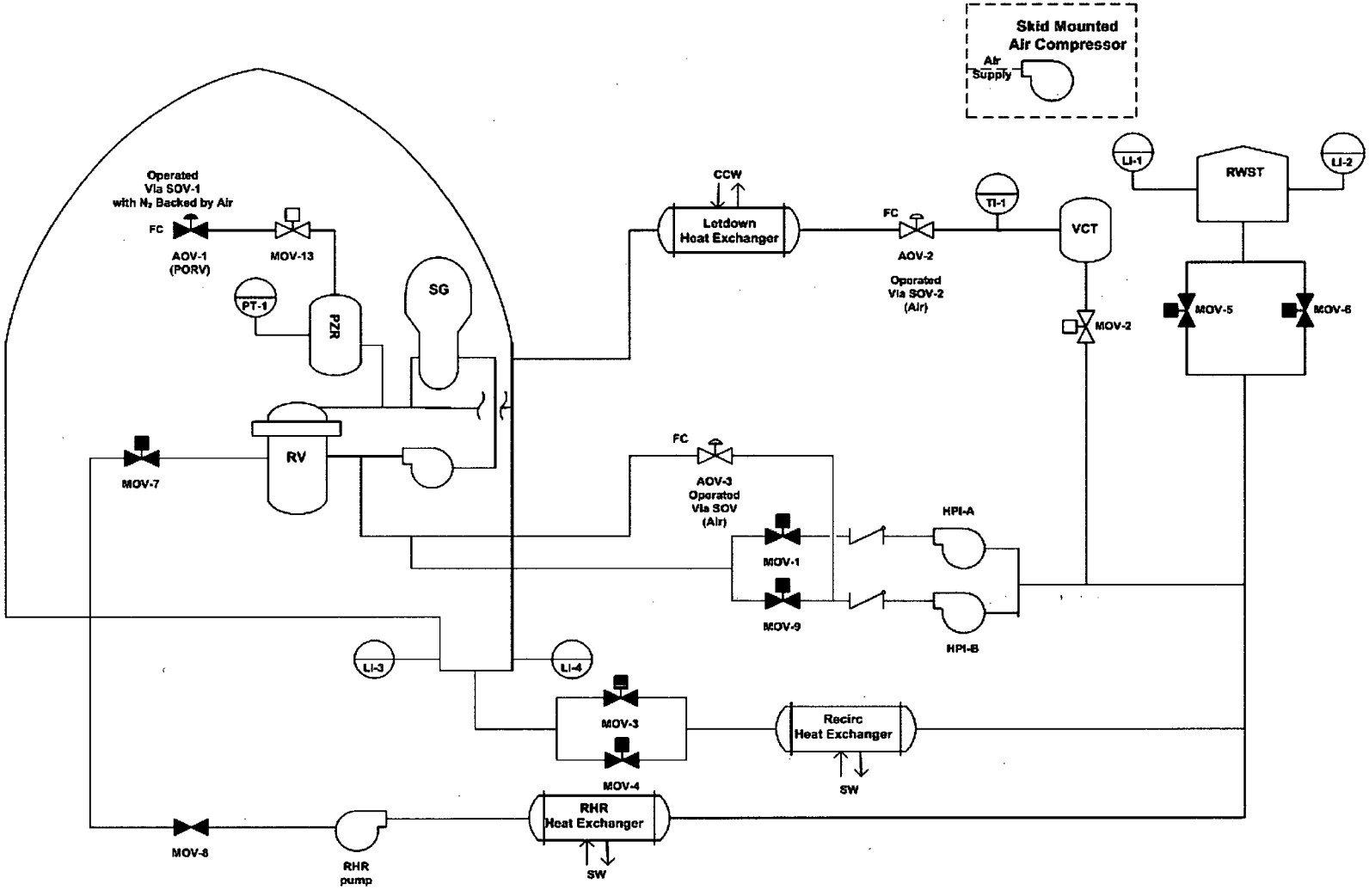

Figure 12 – Aux. Feedwater System

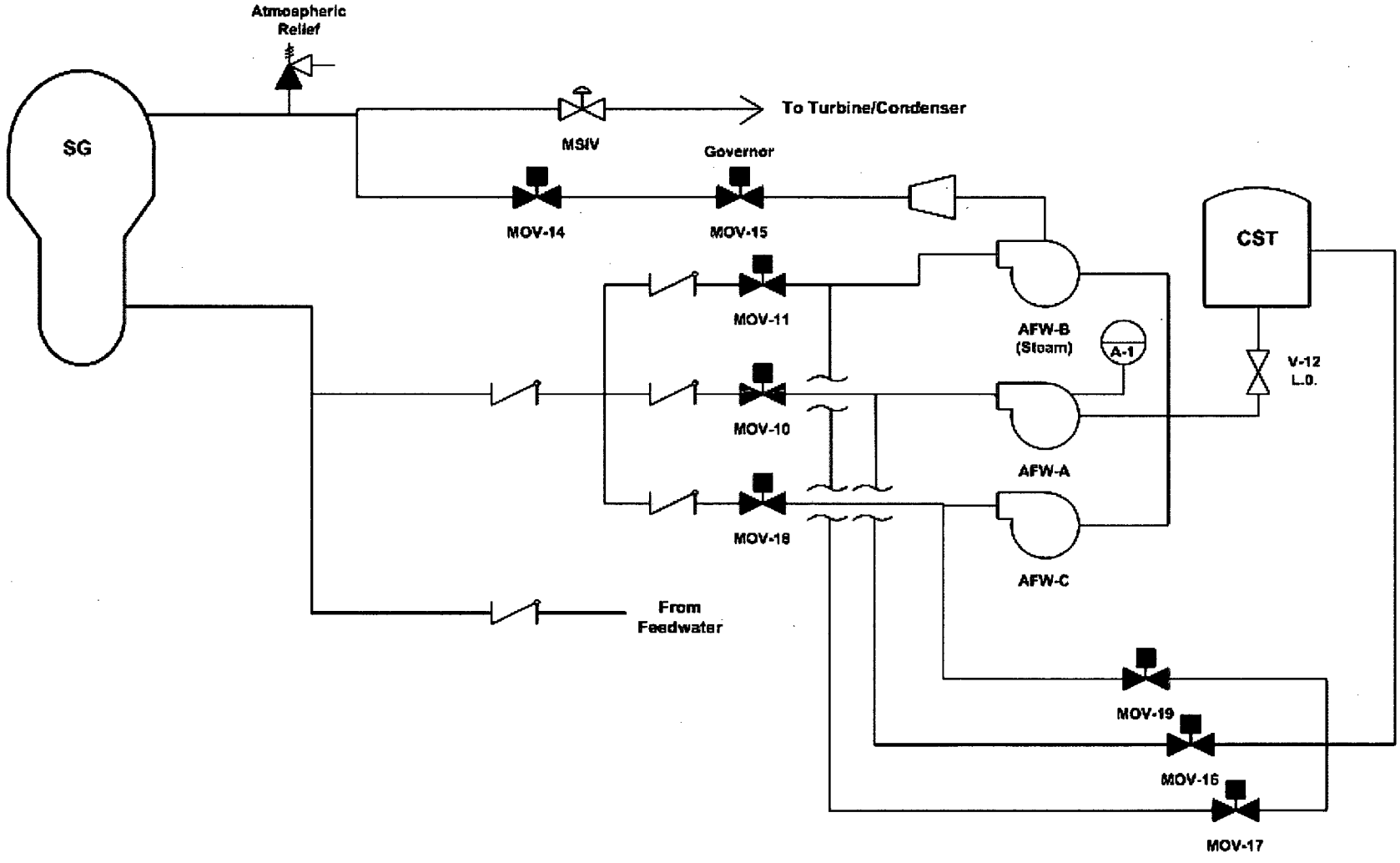

Figure 13 – Electrical Distribution System

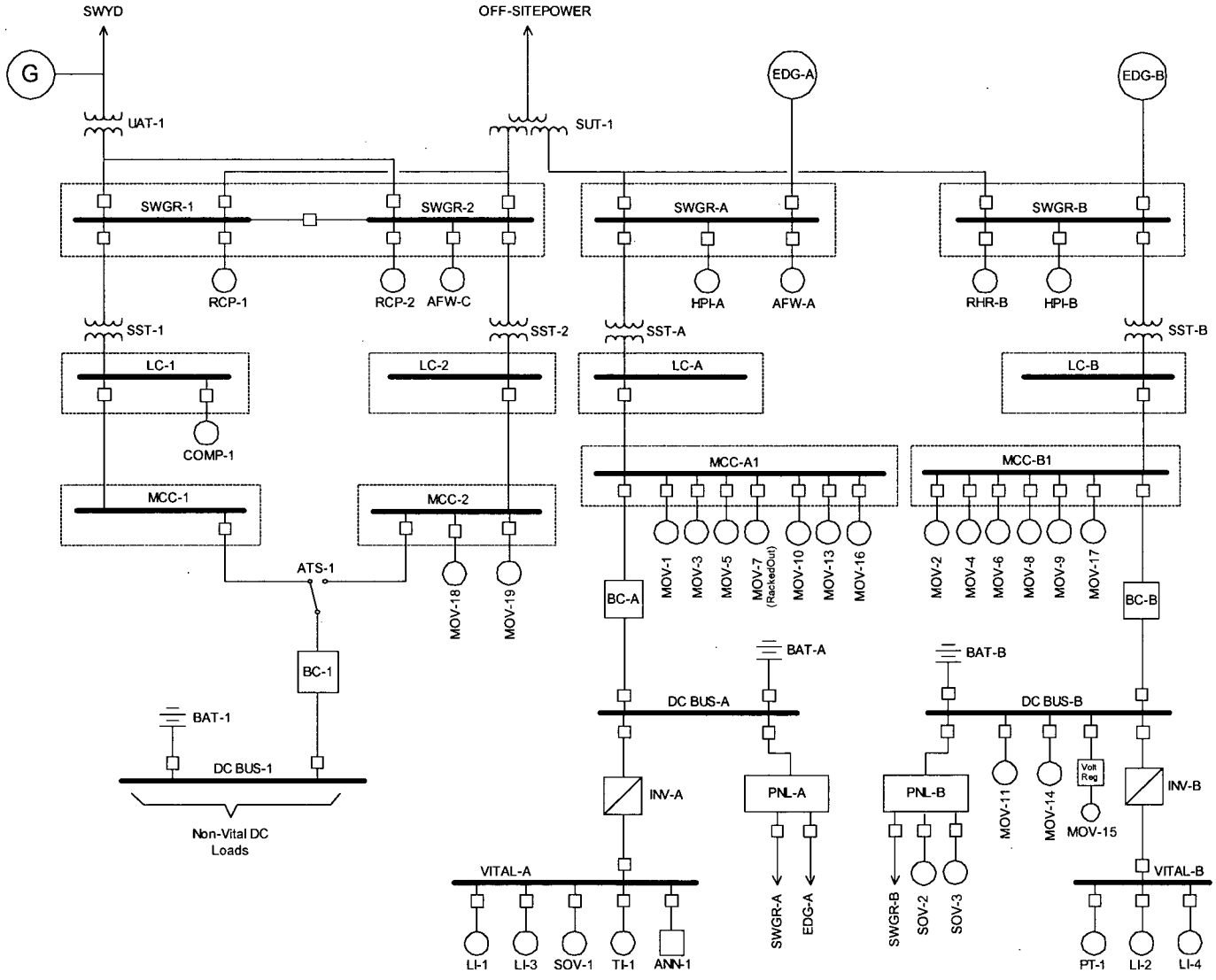

1.3 MODULE 1: PRA/HRA

The following is a short description of the fire PRA technical tasks covered in this module. For details regarding these tasks, refer to the individual task descriptions in Volume 2 of EPRI 1011989, NUREG/CR-6850.

- ***Fire PRA Component Selection (Task 2).*** The selection of components that are to be credited for plant shutdown following a fire is a critical step in any fire PRA. Components selected would generally include many, but not necessarily all components credited in the 10 CFR 50 Appendix R post-fire SSD analysis. Additional components will likely be selected, potentially including any and all components credited in the plant's internal events PRA. Also, the proposed methodology would likely introduce components beyond either the 10 CFR 50 Appendix R list or the internal events PRA model. Such components are often of interest due to considerations of multiple spurious actuations that may threaten the credited functions and components as well as concerns about fire effects on instrumentation used by the plant crew to respond to the event.

- ***Qualitative Screening (Task 4).*** This task identifies fire analysis compartments that can be shown without quantitative analysis to have little or no risk significance. Fire compartments may be screened out if they contain no components or cables identified in Tasks 2 and 3, and if they cannot lead to a plant trip due to either plant procedures, an automatic trip signal, or technical specification requirements.

- ***Plant Fire-Induced Risk Model (Task 5).*** This task discusses steps for the development of a logic model that reflects plant response following a fire. Specific instructions have been provided for treatment of fire-specific procedures or preplans. These procedures may impact availability of functions and components or include fire-specific operator actions (e.g., self-induced station blackout).

- ***Quantitative Screening (Task 7).*** A fire PRA allows the screening of fire compartments and scenarios based on their contribution to fire risk. This approach considers the cumulative risk associated with the screened compartments (i.e., the ones not retained for detailed analysis) to ensure that a true estimate of fire risk profile (as opposed to vulnerability) is obtained.

- ***Post-Fire Human Reliability Analysis (Task 12).*** This task considers operator actions for manipulation of plant components. The analysis task procedure provides structured instructions for identification and inclusion of these actions in the fire PRA. The procedure also provides instructions for estimating screening human error probabilities (HEPs) before detailed fire modeling results have been developed (e.g., fire growth and damage behaviors or detailed circuit analyses). In a fire PRA, estimation of HEP values with high confidence is critical to the effectiveness of screening. This report does not develop a detailed fire HRA methodology. A number of HRA methods can be adopted for fire with appropriate additional instructions that superimpose fire effects on any of the existing HRA methods such as SHARP, ATHEANA, etc. This would improve consistency across analyses (i.e., fire and internal events PRA). This task is subdivided into Task 12a, "Screening Post-Fire HRA," and Task 12b, "Post-Fire HRA Detailed Analysis."

- ***Fire Risk Quantification (Task 14).*** The task summarizes what is to be done for quantification of the fire risk results.

- ***Uncertainty and Sensitivity Analyses (Task 15).*** This task describes the approach to follow for identifying and treating uncertainties throughout the fire PRA process. The treatment may vary from quantitative estimation and propagation of uncertainties where possible (e.g., in fire frequency and nonsuppression probability) to identification of sources without quantitative estimation. The treatment may also include one-at-a-time variation of individual parameter values or modeling approaches to determine the effect on the overall fire risk (i.e., sensitivity analysis).

- ***Fire PRA Documentation (Task 16).*** This task describes the approach to follow for documenting the fire PRA process and its results.

1.4 MODULE 2: Electrical Analysis

The following is a short description of the fire PRA technical tasks covered in this module. For details regarding these tasks, refer to the individual task descriptions in Volume 2 of EPRI 1011989, NUREG/CR-6850.

- ***Fire PRA Cable Selection (Task 3).*** This task provides instructions and technical considerations associated with identifying cables supporting those components selected in Task 2. In previous fire PRA methods (such as EPRI FIVE and Fire PRA Implementation Guide), this task was relegated to the SSD analysis and its associated databases. This document offers a more structured set of rules for selection of cables.

- ***Detailed Circuit Failure Analysis (Task 9).*** This task provides an approach and technical considerations for identifying how the failure of specific cables will impact the components included in the fire PRA SSD plant response model.

- ***Circuit Failure Mode Likelihood Analysis (Task 10).*** This task considers the relative likelihood of various circuit failure modes. This added level of resolution may be a desired option for those fire scenarios that are significant contributors to the risk. The methodology provided in EPRI 1011989, NUREG/CR-6850 benefits from the knowledge gained from the tests performed in response to the circuit failure issue.

1.5 MODULE 3: Fire Analysis

The following is a short description of the fire PRA technical tasks covered in this module. For details regarding these tasks, refer to the individual task descriptions in Volume 2 of EPRI 1011989, NUREG/CR-6850.

- ***Plant Boundary Definition and Partitioning (Task 1).*** The first step in a fire PRA is to define the physical boundary of the analysis and to divide the area within that boundary into analysis compartments.

- ***Fire Ignition Frequency (Task 6).*** This task describes the approach to develop frequency estimates for fire compartments and scenarios. Significant changes from the EPRI FIVE method have been made in this task. The changes generally relate to use of challenging events, considerations associated with data quality, and increased use of a fully component-based

ignition frequency model (as opposed to the location/component-based model used, for example, in FIVE).

- ***Scoping Fire Modeling (Task 8).*** Scoping fire modeling is the first task in the fire PRA framework where fire modeling tolls are used to identify ignition sources that may impact the fire risk of the plant. Screening some of the ignition sources, along with the applications of severity factors to the unscreened ones, may reduce the compartment fire frequency previously calculated in Task 6.

- ***Detailed Fire Modeling (Task 11).*** This task describes the method to examine the consequences of a fire. This includes consideration of scenarios involving single compartments, multiple fire compartments, and the main control room. Factors considered include initial fire characteristics, fire growth in a fire compartment or across fire compartments, detection and suppression, electrical raceway fire barrier systems, and damage from heat and smoke. Special consideration is given to turbine generator (T/G) fires, hydrogen fires, high-energy arcing faults, cable fires, and main control board (MCB) fires. There are considerable improvements in the method for this task over the EPRI FIVE and Fire PRA Implementation Guide in nearly all technical areas.

- ***Seismic Fire Interactions (Task 13).*** This task is a qualitative approach to help identify the risk from any potential interactions between an earthquake and a fire.

1.6 FORMAT OVERVIEW

1.6.1 Video Series

This NUREG-CP centers on video recordings of the NRC/EPRI course/seminars. Thus, the course material is presented primarily in video format on the enclosed DVDs. A noteworthy ramification is the absence of written text independently relating the course material. It was decided that the words and gestures of the six lecturers were a necessary component of the course that were preserved on the video recordings as authentically as possible.

Each module is broken into a number of sessions, corresponding to the associated tasks. Some tasks correspond to multiple sessions, as indicated in each of the video menus. In a conventional DVD player, these sessions appear as scenes within the DVD menu, which also indicates the associated content. Important to note is that these DVDs comprise videos of both course/seminars (i.e., each session was presented on two different dates). Careful selection was made to provide the best presentation of each session's material.

Onscreen text indicates which lecture slide is currently being discussed. In addition, a full-screen snapshot of each slide will appear to indicate what information is currently being discussed, and a smaller-scale version of the slide will continuously be displayed onscreen while the instructors are lecturing. These are the same slides that are present in this NUREG/CP as well as within the associated session folders on the DVDs, accessible only by computer.

1.6.2 Exercises

The three modules of this course contain exercises that were distributed by the instructors for completion as reinforcement of certain concepts introduced within the sessions. However, the

videos included with these three NUREG/CP volumes do not adequately describe the locations and instructors' intentions regarding the exercises. Because of that inadequacy, this section provides further available information regarding the exercises.

The exercises are not included in the three "Module Overview" slide presentations in the "2 INTRODUCTION SLIDES" section of this "OVERALL COURSE" part of Volume 1 (i.e., they are not provided in SESSION 3b: PRA/HRA Module Overview, SESSION 3c: Circuits/Electrical Module Overview, and SESSION 3d: Fire Analysis Module Overview). Instead, the exercises are presented in the detailed, separate, parallel sessions for each module.

Thus, the PRA/HRA exercises are presented in the "Module 1: PRA/HRA (Systems Analysis)" part of Volume 1; the "Module 2: Electrical Analysis" exercises are presented in Volume 2; and the "Module 3: Fire Analysis" exercises are presented in Volume 3. The exercises are organized differently within each of the three volumes, and it should be noted that they do not cover all 16 of the EPRI 1011989, NUREG/CR-6850 tasks.

MODULE 1: PRA/HRA

Exercises for this module begin with Task 2, "Component Selection," as presented in the "MODULE 1: SESSION 1b: Example Exercises" section of this Volume 1. These exercises have seven steps. Step 1 asks whether a fire PRA model should incorporate a series of initiating events. Students are asked to fill in the last two columns, explaining whether or not (and why) each initiating event should be included in a fire PRA. For example, students are asked whether initiator %T1, a reactor trip, is a reasonable consequence of a fire in most NPPs. Step 2 asks the same question, but this time about whether certain systems rather than events should reasonably be included. Step 3, as introduced in the lecture, combines the first two steps and examines further which fire initiators are relevant to the particular equipment selected in Step 2. Step 4 identifies possible failure paths for each of the components that remain after Step 3 and also identifies the need for modeling each of the failure paths depending upon its relative significance within the PRA context. Step 5 incorporates the human element of the PRA. At this point, instrumentation issues as a consequence of fire are discussed. Students are asked to identify specific failure mechanisms that could occur as a result of the faulty operation of each of the pieces of instrumentation. Step 6 examines multiple failure modes that are possible due to interactions between pieces of equipment. Only one interaction is identified in this simplified plant. Finally, in Step 7, the fire PRA equipment list is assembled. Students are given all of the components as well as the event identifiers and descriptions and are asked to identify the operating and failed positions of each component, according to different modes. Appendix B provides the solution to these Task 2 exercises.

Exercises for Task 5 (mentioned in Slide 15 of the "MODULE 1: SESSION 2: Fire Induced Risk Model Development" section of this Volume 1 but not included in the video for that Session) focus on development of the fire-induced risk model for those components deemed necessary within the screening process of Task 2. There are two steps in the task. First, students are asked to use enclosed event trees and fault trees to develop a cumulative distribution function (CDF)/conditional core damage probability (CCDP) model that identifies where changes are required from the existing model to facilitate event mapping. Second, students develop a large early release frequency (LERF) or conditional large early release probability (CLERP) model,

asking essentially the same questions except about fire-initiating events. The same event and fault trees are employed. These "Task 5" exercises and their supporting information occupy 53 pages and are not included in this NUREG/CP report. However, they are available on NRC's public Web site (www.nrc.gov): using the Web-based ADAMS search, enter ML083330431 in the "Search" box, right click on the "Image File" icon, select "Open Link," and see pages 68 thru 120. However, the solutions are not currently available in this NUREG/CP report nor on the Web.

MODULE 2: ELECTRICAL ANALYSIS

The first five sessions of the electrical task develop a structured approach for identifying cables important to the fire PRA, performing circuit analysis to refine failure modes associated with fire-induced equipment, and assigning likelihoods of spurious operations. The approach then determines the importance of cable failures to fire events by using electrical diagrams and logic trees to show which outcomes are possible given unsuccessful operations of cables. An overview of the exercises for this module is presented in the sixth session (Volume 2 of this NUREG/CP, Session 6, "Electrical Exercises Overview"). The exercises draw from all of the modules and employ drawings that the developers provided for completion of the analyses. One solution is included as a video, and the rest have instructor solutions with the completed charts as described below.

An exercise sheet for each of the 16 exercises is provided in Volume 2 in the "3 EXAMPLE EXERCISES" section. Another copy of each exercise sheet, along with the drawings needed to perform it, is provided in Volume 2, Appendix B, "Exercise Problems and Solutions," in its "Exercises with Reference Figures" subsection. Solutions are provided in Volume 2, Appendix B, "Exercise Problems and Solutions," in its "Instructors Exercise Solutions" subsection. The exercises include analyses of various failure modes of AOVs and MOVs, failure of a reactor coolant system pressure indicator, a spurious annunciator alarm, an HPI pump failure to start and failure to run, an instrument air compressor failure to run, and a 480V load center fault.

It should be noted that incomplete and sometimes conflicting documentation of Exercise 14 was available for inclusion in this NUREG/CP report that does not acceptably describe details of the exercise nor provide its solution.

MODULE 3: FIRE ANALYSIS

Module 3 includes exercises that correspond to the associated sessions, providing reinforcement of the material presented in the session. Instructions for each of the fire analysis exercises are specific to the exercise and are included at the beginning of each exercise on the videos. Most involve completing a chart with missing information, and the solutions are included within each module and labeled as the instructor set.

In this NUREG/CP, the exercises are presented in Volume 3 in five "Example Problems" sub-sessions, numbered 1b, 2b, 6b, 10b, and 11b. The solutions for all exercises are presented in Volume 3, Appendix C, "Exercise Set Solutions." The exercises include, respectively, selection of the plant analysis boundary and its partitioning into fire compartments, mapping ignition

sources, preparation for walkdown, characterization of compartments with respect to features important to fires such as fire detection and suppression features and ignition sources, and fire modeling in the main control room.

1.6.3 General Comments Regarding This Course

The material within the DVD includes solutions to many of the example sets as well as full-size versions of the lecture slides that are printable in assorted formats. Specifically, the solutions to the electrical exercise sets include instructor interpretations that are challenging to read and, therefore, were edited for use in the videos.

Questions raised by participants at the conference were removed from the videos. Generally, the available video footage had questions that were largely inaudible. For the convenience of the user, selected questions and answers have been transcribed and included in the associated session folder on the DVDs. In this NUREG/CP, each volume includes selected questions and responses in its Appendix A, "Questions Asked in Module {1, 2, or 3} Sessions."

To obtain the most complete set of materials for this course, instructors provided portions (particularly of the exercises and their solutions) that they had prepared for use in these courses over a period of time. Because this material is being continuously improved, minor discrepancies resulted between sections (e.g., between the statement of certain exercises and their solutions). However, these differences are not sufficiently numerous nor significant to affect accomplishment of the overall objectives of the course for its users.

2 INTRODUCTION SLIDES

SESSION 1: NRC Welcome

Slide 1

Notes:

Slide 2

Notes:

Slide 3

Notes:

Introduction

- Domestic Attendees:
  - NRC Headquarters and all 4 Regional Offices
  - U.S. Department of Energy (DOE)
  - National Aeronautics and Space Administration (NASA)
  - EPRI
  - NPP Licensees/Utilities
  - NSSS Vendors
  - Consulting Engineering Firms
  - Universities

Fire PRA Workshop, 2008, Bethesda, MD
Module I-1: Fire Risk Requantification Project
Slide 3
A Collaboration of U.S. NRC Office of Nuclear Regulatory Research (RES) & Electric Power Research Institute (EPRI)

Slide 4

Notes:

Introduction

- International Attendees
  - Regulators and NPP Operators
- Belgium
- Canada
- France
- Japan
- South Korea
- Spain
- Sweden

Fire PRA Workshop, 2008, Bethesda, MD
Module I-1: Fire Risk Requantification Project
Slide 4
A Collaboration of U.S. NRC Office of Nuclear Regulatory Research (RES) & Electric Power Research Institute (EPRI)

Slide 5

Introduction

- Enjoy the Training Session
  - Interact with your Peers
- Participate in the Sessions
  - Ask Questions
- If you have any needs, please contact one of the members of the NRC

Fire PRA Workshop, 2008, Bethesda, MD
Module I-1: Fire Risk Requantification Project

Slide 5

A Collaboration of U.S. NRC Office of Nuclear Regulatory Research (RES) & Electric Power Research Institute (EPRI)

Notes:

SESSION 2: Fire Risk Requantification Project

Slide 1

Notes:

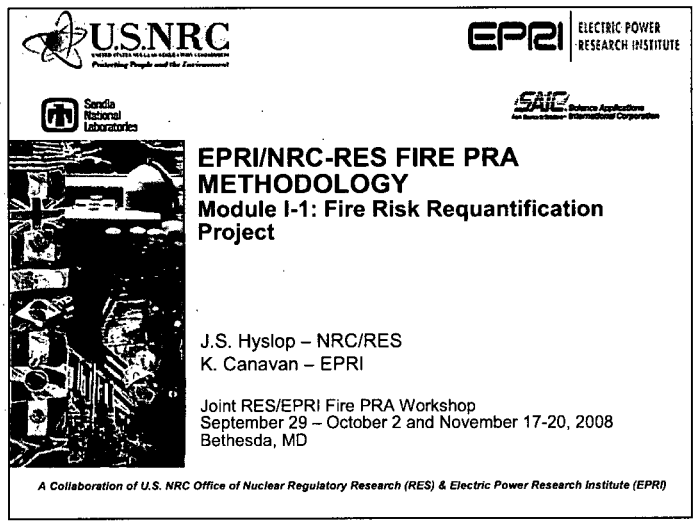

Slide 2

Notes:

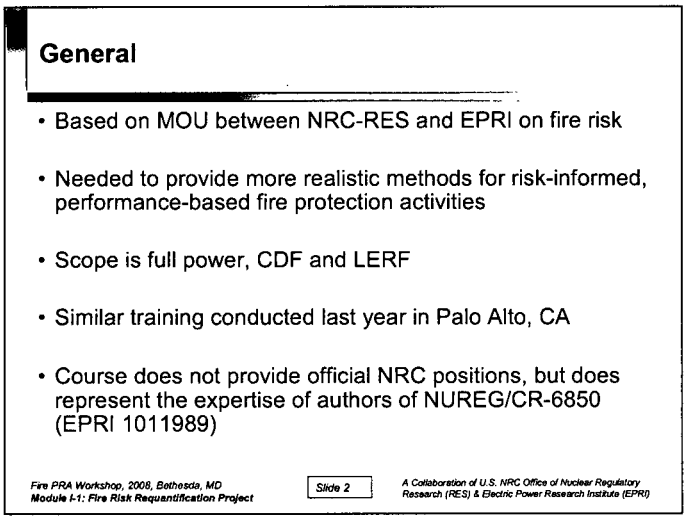

Slide 3

Notes:

Quality Product

- NRC and EPRI brought diverse group of specialists together
- Volunteer pilot plants support testing
- Peer review by other participating licensees
- Public review and comment
- Formal process to resolve technical disputes

Fire PRA Workshop, 2008, Bethesda, MD
Module I-1: Fire Risk Requantification Project

Slide 3

A Collaboration of U.S. NRC Office of Nuclear Regulatory Research (RES) & Electric Power Research Institute (EPRI)

Slide 4

Notes:

Advancement To State Of Art

- Improvements made in areas important to fire risk (resource constraints considered)
- Means to advance
  - Consolidate existing research
  - Analyze more extensive data
  - Modify existing methods
  - Develop new approaches

Fire PRA Workshop, 2008, Bethesda, MD
Module I-1: Fire Risk Requantification Project

Slide 4

A Collaboration of U.S. NRC Office of Nuclear Regulatory Research (RES) & Electric Power Research Institute (EPRI)

Slide 5

Uses Of Methodology

- Support for new rule 10CFR50.48c implementation
  - NFPA pilot plants using technology for fire PRA development/upgrade
- ANS fire risk standard development
  - Typically defines state-of-art, although supports lesser capability categories as well
- Reactor Oversight Process analyses
  - Refined phase 3 analyses
  - Development of phase 2 Fire Protection SDP (IMC 0609, Appendix F)
- Basis for review guidance that RES developed for NFPA 805 related changes
- Other expected uses
  - Analyses under the current fire protection regulations (i.e. exemptions/deviations or plant changes due to risk-informed technical specifications)

Fire PRA Workshop, 2008, Bethesda, MD
Module I-1: Fire Risk Requantification Project
Slide 5
A Collaboration of U.S. NRC Office of Nuclear Regulatory Research (RES) & Electric Power Research Institute (EPRI)

Notes:

Slide 6

Implementation Impacts

- Fire PRA Methodology Standard clarifies requirements
  - Particular impact on spurious actuations
- FAQ process for NFPA pilots requires implementation guidance
  - Several FAQs related to fire ignition frequency and counting of sources solved
- Newer FAQs have been identified that address many areas of fire PRA
  - Identified in next presentation
  - At various stages of completion

Fire PRA Workshop, 2008, Bethesda, MD
Module I-1: Fire Risk Requantification Project
Slide 6
A Collaboration of U.S. NRC Office of Nuclear Regulatory Research (RES) & Electric Power Research Institute (EPRI)

Notes:

Slide 7

Notes:

Fire Model Validation and Verification (V&V)

- Fire modeling is an integral part of fire PRA
- Fire model verification and validation (V&V) is required for NFPA 805 applications
- Most fire models are computational
- Some are based only on empirical correlations
  - Address cases where computational fire models inadequate
  - Fill important gaps in fire PRA
- PRA Methodology document not a reference for fire models
- EPRI/RES V&V of fire models EPRI 101999/NUREG-1824

Fire PRA Workshop, 2008, Bethesda, MD
Module I-1: Fire Risk Requantification Project
Slide 7
A Collaboration of U.S. NRC Office of Nuclear Regulatory Research (RES) & Electric Power Research Institute (EPRI)

Slide 8

Notes:

Related Activities

• EPRI 1011989/NUREG/CR-6850	
– Publication	Sept 2005
– First Workshop	Jun 2005
– Second Workshop	May 2006
– First detailed course	Jul, Aug 2007
• EPRI 1011999/NUREG-1824	May 2007
• Current Fire PRA Course	Sept, Nov 08
• Fire Modeling User's Guide	mid 2009
• Fire HRA Methodology Development	Fall 2009
• FAQ Support	Ongoing
• Fire Modeling Training	Ongoing
• Low Power/Shutdown Fire PRA Methods	NRC

Fire PRA Workshop, 2008, Bethesda, MD
Module I-1: Fire Risk Requantification Project
Slide 8
A Collaboration of U.S. NRC Office of Nuclear Regulatory Research (RES) & Electric Power Research Institute (EPRI)

Slide 9

Notes:

Project Team

- Covers all technical disciplines critical to Fire PRA
  - Technical Lead: B. Najafi, S. Nowlen
  - General PRA & plant systems analysis: A. Kolaczkowski, R. Anoba
  - Circuit Analysis and Appendix R: D. Funk, F. Wyant
  - Human Reliability Analysis: J. Forrester, W. Hannaman, A. Kolaczkowski
  - Fire analysis: F. Joglar, M. Kazarians
  - Consultants: A. Mosleh, D. Bley
- Collectively, over 250 years of relevant experience
- Principal authors of documented Fire PRA methods in the US for the past 2 decades
- Experience with use of previous methods; their strengths and weaknesses
- The Methodology reflects the consensus of this team, EPRI and RES

Fire PRA Workshop, 2008, Bethesda, MD
Module I-1: Fire Risk Requantification Project

Slide 9

A Collaboration of U.S. NRC Office of Nuclear Regulatory Research (RES) & Electric Power Research Institute (EPRI)

SESSION 3a: Fire PRA Methodology and Course Structure

Slide 1

Notes:

EPRI/NRC-RES FIRE PRA METHODOLOGY

Introduction and Overview: the Fire PRA Methodology and Course Structure

Bijan Najafi - Science Applications International Corp.
Steve Nowlen - Sandia National Laboratories
Joint RES/EPRI Fire PRA Training Workshop
September and November, 2008
Bethesda, MD

A Collaboration of U.S. NRC Office of Nuclear Regulatory Research (RES) & Electric Power Research Institute (EPRI)

Slide 2

Notes:

Overview

I. An Overview of the EPRI/NRC-RES Fire PRA Methodology
- Fire PRA Course:
  - Structure/Content
  - Objectives
  - Logistics

II. Ongoing Activities Related to Fire PRA
- ANS/ASME Fire PRA Standard
- Fire HRA, joint EPRI & RES project

Fire PRA Training, Sept. and Nov., 2008
Introduction and Overview

Slide 2

A Collaboration of U.S. NRC Office of Nuclear Regulatory Research (RES) & Electric Power Research Institute (EPRI)

Slide 3

Notes:

PART I

An Overview of the
EPRI/NRC-RES Fire PRA Methodology

&

The Fire PRA Course

Slide 4

Notes:

BACKGROUND

- Prior to IPEEE; Mostly simple approximate method for order-of-magnitude assessment of fire risk, e.g. NUREG/CR-2258, Fire Risk Analysis for Nuclear Power Plants.
- EPRI FIVE (1992)
  - A "vulnerability evaluation" methodology developed in response to IPEEE program
- EPRI Fire PRA Implementation Guide (1995)
  - Developed as a complement to FIVE for detailed evaluation of unscreened fire areas/compartments
  - More robust methods (compared to FIVE) for:
    - Development and evaluation of fire risk model, including human actions
    - Assessment of fire growth and damage, detection and suppression
    - Control room and multi-compartment fire risk

Slide 5

Notes:

EPRI/NRC-RES FIRE PRA METHODOLOGY

- The methodology is presented in the form technical task procedures within an overall process
- The process is intended as a guide and should fit most cases
- User may adjust process based on plant-specific information, efficiency, economy and desired applications

Fire PRA Training, Sept. and Nov., 2008
Introduction and Overview

Slide 5

A Collaboration of U.S. NRC Office of Nuclear Regulatory Research (RES) & Electric Power Research Institute (EPRI)

Slide 6

Notes:

EPRI/NRC-RES FIRE PRA METHODOLOGY

- Procedures cover the following technical areas
  - Plant analysis boundary and partitioning
  - Fire PRA component selection and risk model
  - Circuit/cable selection, routing and failure modes analysis
  - Screening, qualitative and quantitative
  - Fire ignition frequency
  - Fire modeling; fire growth, damage and detection/suppression
  - Post-fire human reliability analysis (HRA)
  - Seismic-fire interactions, and
  - Fire risk quantification, including uncertainties, and documentation

Fire PRA Training, Sept. and Nov., 2008
Introduction and Overview

Slide 6

A Collaboration of U.S. NRC Office of Nuclear Regulatory Research (RES) & Electric Power Research Institute (EPRI)

Slide 7

Notes:

PROCEDURE CONTENT

1. Purpose
2. Scope
3. Background information: General approach and assumptions
4. Interfaces: Input/output to other tasks, plant and other information needed, walk-downs
5. Procedure: Step-by-step instructions for conduct of the technical task
6. References

Appendices: Technical bases, data, examples, special models or instructions, tools or databases

Fire PRA Training, Sept. and Nov., 2008 Introduction and Overview | Slide 7 | *A Collaboration of U.S. NRC Office of Nuclear Regulatory Research (RES) & Electric Power Research Institute (EPRI)*

Slide 8

Notes:

Course Structure

- Three parallel modules:
  - Module 1: Systems/PRA
  - Module 2: Electrical Analysis
  - Module 3: Fire Analysis
- General structure for each module:
  - PowerPoint presentations designed to convey key concepts and the general "how to" of each task
  - Example problems designed to illustrate key elements of the procedures (more on this shortly)

Fire PRA Training, Sept. and Nov., 2008 Introduction and Overview | Slide 8 | *A Collaboration of U.S. NRC Office of Nuclear Regulatory Research (RES) & Electric Power Research Institute (EPRI)*

Slide 9

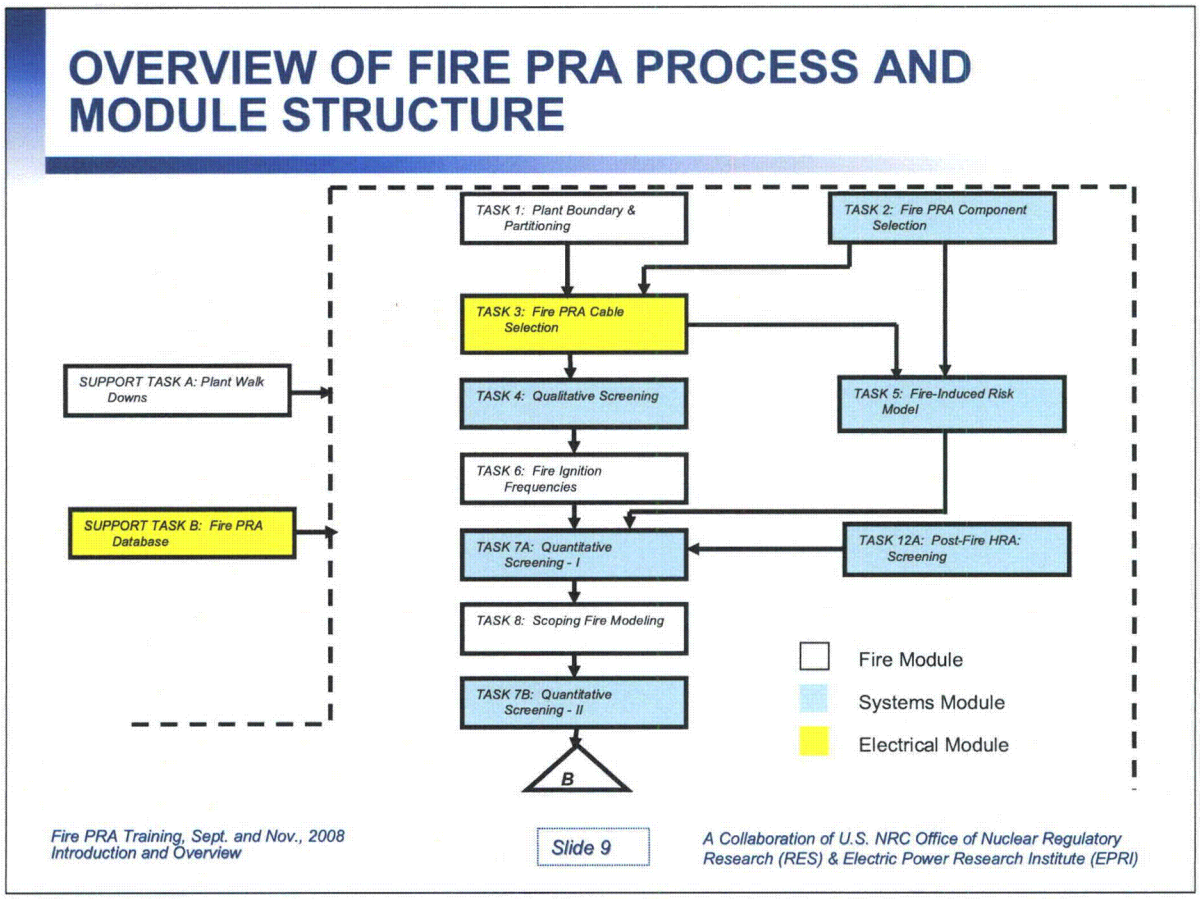

Notes:

Slide 10

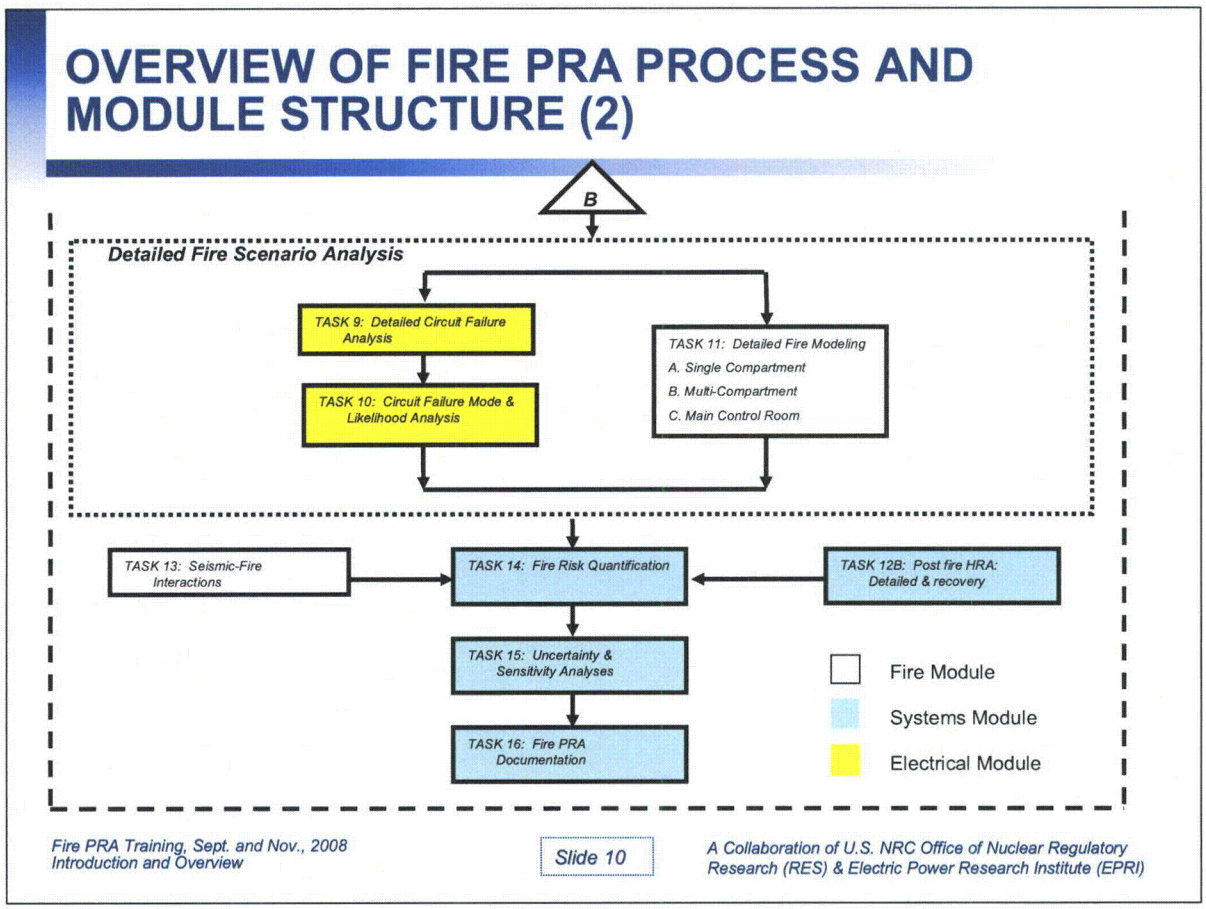

Notes:

Slide 11

Training Objectives (1 of 3)

- Target audience:
  - FPRA practitioners
  - FPRA reviewers
- The "doer" versus the "reviewer"
  - We are targeting both types of users, but the needs are really quite similar
  - The key elements for implementation are the same as the key elements for review
  - Understanding how and why the "doer" does what they do is one key to understanding the analysis itself

Fire PRA Training, Sept. and Nov., 2008
Introduction and Overview

Slide 11

A Collaboration of U.S. NRC Office of Nuclear Regulatory Research (RES) & Electric Power Research Institute (EPRI)

Notes:

Slide 12

Training Objectives (2 of 3)

- Our intent:
  - To deliver practical implementation training at a higher level of detail than provided via the previous "roll-out" workshops
  - To illustrate and demonstrate key aspects of the procedures
- We expect and want significant participant interaction
  - Class size was limited specifically to allow for questions and discussion
  - We *will* take questions about the *methodology*
  - We *cannot* answer questions about a *specific application*
  - *We* will moderate discussions, and *we* will judge when the course must move on

Fire PRA Training, Sept. and Nov., 2008
Introduction and Overview

Slide 12

A Collaboration of U.S. NRC Office of Nuclear Regulatory Research (RES) & Electric Power Research Institute (EPRI)

Notes:

Slide 13

Training Objective (3 of 3)

- This training is about NUREG/CR-6850, EPRI TR-1011989 and the EPRI/RES teams' intent for implementation of that method
  - It is not about regulatory compliance (talk to NRR about that)
  - It is not about alternative methods, NFPA-805, or the ANS FPRA standard and its "Capability Categories"
  - We cannot cover areas that are outside the scope of the document (e.g., detailed HRA)
- Your next step:
  - You should not expect to come out of this training an "instant expert"
  - We do expect that after the training you will possess the fundamental knowledge needed to "hit the ground running" and to implement the method or to review an application involving the method
  - Ultimately, you learn by doing, so get out there and do it!

Notes:

Slide 14

What's next:

- The rest of these introductory slides will provide a short overview of each of the three modules
- Intent is to ensure that those of you in one module are aware of what is being covered in the other two modules
- FPRA requires a team effort and integration is critical to success
- That will close out the introductions, and then you will be breaking up and going to your individual modules

Notes:

SESSION 3b: PRA/HRA Module Overview

Slide 15

Notes:

Module 1: PRA/HRA

- This module will cover all aspects of the plant systems accident response modeling, human reliability analysis, and quantification tasks
- Specific tasks covered are:
  - Task 2: Equipment Selection
  - Task 4: Qualitative Screening
  - Task 5: Fire-Induced Risk Model
  - Task 7: Quantitative Screening
  - Task 12: Human Reliability Analysis (HRA)*
  - Task 15: Risk Quantification
  - Task 16: Uncertainty Analysis

*Fire HRA is the subject of an ongoing RES-EPRI collaboration. Results are expected to supersede guidance in current methodology document. More on this later in this presentation...

Fire PRA Training, Sept. and Nov., 2008
Introduction and Overview

Slide 15

A Collaboration of U.S. NRC Office of Nuclear Regulatory Research (RES) & Electric Power Research Institute (EPRI)

Slide 16

Notes:

Task 2: Equipment Selection (1 of 3)

- Objective: To decide what subset of the plant equipment will be modeled in the FPRA
- FPRA equipment will draw from:
  - Equipment from the internal events PRA
    - We do assume that an internal events PRA is available!
  - Equipment from the Post-Fire Safe Shutdown analysis
    - e.g., the Appendix R analysis or the Nuclear Safety Analysis under NFPA-805
  - Other "new" equipment not in either of these analyses

Fire PRA Training, Sept. and Nov., 2008
Introduction and Overview

Slide 16

A Collaboration of U.S. NRC Office of Nuclear Regulatory Research (RES) & Electric Power Research Institute (EPRI)

Slide 17

Task 2: Equipment Selection (2 of 3)

- Many choices to be made in this task, many factors will influence these decisions
  - Fire-induced failures that might cause and initiating event
  - Mitigating equipment and operator actions
  - Fire-induced failures that adversely impact credited equipment
  - Fire-induced failures that could lead to inappropriate or unsafe operator actions

Notes:

Slide 18

Task 2: Equipment Selection (3 of 3)

- Choices are important in part because "selecting" equipment implies a burden to *Identify and Trace* cables
  - Cable selection is covered in Module 2 (Electrical) but can represent a significant commitment of time and effort to the FPRA

Notes:

Slide 19

Notes:

Task 4: Qualitative Screening (1 of 2)

- Objective: To identify fire compartments that can be screened out as insignificant risk contributors without quantitative analysis
- This is an *Optional* task
  - You may choose to bypass this task which means that all fire compartments will be treated quantitatively to some level of analysis (level may vary)

Slide 20

Notes:

Task 4: Qualitative Screening (2 of 2)

- Criteria are established that consider:
  - Trip initiators
  - Presence of selected equipment
  - Presence of selected cables
- Note that any compartment that is "screened out" in this step is reconsidered in the multi-compartment fire analysis as a potential source of multi-compartment fires
  - See Module 3, Task 11c

Slide 21

Task 5: Fire-Induced Risk Model (1 of 2)

- Objective: To construct the FPRA plant response model
  - Functional relationships among selected equipment
  - Equipment failure modes (including spurious actuation)
  - Human Failure Events (HFEs)

Notes:

Slide 22

Task 5: Fire-Induced Risk Model (2 of 2)

- Covers both CDF and LERF
  - Builds on/from the internal events model but more than just a "tweak"
  - Adds fire unique equipment
  - Adds fire-specific equipment failure modes (e.g., spurious actuations)
  - Adds fire-specific operator actions

Notes:

Slide 23

Notes:

Task 7: Quantitative Screening (1 of 2)

- Objective: To identify compartments that can be shown to be insignificant contributors to fire risk based on limited quantitative considerations
- This task is *Optional*
  - Analyst may choose to retain all compartments for more detailed analysis

Slide 24

Notes:

Task 7: Quantitative Screening (2 of 2)

- Screening may be performed in stages of increasing complexity
- Consideration is given to:
  - Fire ignition frequency
  - Screening of specific fire sources as non-threatening (no spread, no damage)
  - Impact of fire-induced equipment and cable failures
    - conditional core damage probability (CCDP)

Slide 25

Notes:

Post-fire Human Reliability Analysis (1 of 5)

- Objective: To assess Human Error Probabilities (HEPs) for the Human Failure Events (HFEs) included in the FPRA plant response model
  - For those already in the level 1 PRA, and
  - Those to be added specific to post-fire condition considerations
- Fire HRA is being addressed under a separate RES-EPRI collaboration
  - Dealing with both screening and quantification
  - *Intent is that new guidance will supersede that currently in* NUREG/CR-6850 EPRI TR-1011989
  - More on this later
- In the mean time, back to the current guidance …

Fire PRA Training, Sept. and Nov., 2008
Introduction and Overview

Slide 25

A Collaboration of U.S. NRC Office of Nuclear Regulatory Research (RES) & Electric Power Research Institute (EPRI)

Slide 26

Notes:

Post-fire Human Reliability Analysis (2 of 5)

- Focus on the Screening HRA
  - Rule-based (in the absence of detailed fire scenario information) quantitative screening approach
    - Fire conditions; environment and accessibility
    - Fire-induced component/system faults, such as spurious actuations
    - Location and timing to diagnose and perform the required actions
    - Availability of the crew to perform the actions, not impacted by dual responsibilities
  - Instructions provided to develop screening HEPs based on these conditions

Fire PRA Training, Sept. and Nov., 2008
Introduction and Overview

Slide 26

A Collaboration of U.S. NRC Office of Nuclear Regulatory Research (RES) & Electric Power Research Institute (EPRI)

Slide 27

Notes:

Post-fire Human Reliability Analysis (3 of 5)

- Use of existing HRA methods in fire conditions
  - Fire performance shaping factors (PSF) defined and described
    1. Available staffing resources
    2. Applicability and suitability of training/experience
    3. Suitability of relevant procedures and administrative controls
    4. Availability and clarity of instrumentation
    5. Time available and time needed to complete the action, including impact of concurrent and competing activities
    6. Environment
    7. Accessibility and operability of equipment
    8. Special tools
    9. Communication
    10. Crew dynamics and characteristics
    11. Special fitness needs
  - Operator Manual Action (OMA) feasibility criteria and Post-Fire HRA PSFs

Fire PRA Training, Sept. and Nov., 2008
Introduction and Overview

Slide 27

A Collaboration of U.S. NRC Office of Nuclear Regulatory Research (RES) & Electric Power Research Institute (EPRI)

Slide 28

Notes:

Post-fire Human Reliability Analysis (4 of 5)

- Quantitative link between these PSFs & best-estimate HEPs specifically for fire not developed but much can be handled with existing methods and guidance.

Fire PRA Training, Sept. and Nov., 2008
Introduction and Overview

Slide 28

A Collaboration of U.S. NRC Office of Nuclear Regulatory Research (RES) & Electric Power Research Institute (EPRI)

Slide 29

Notes:

Post-Fire Human Reliability Analysis (5 of 5)

- Special Case: Main Control Room (MCR) abandonment
  - Additional considerations as part of PSF evaluation, e.g.,
    - The decision and timing of control room evacuation
    - The number, complexity and multiple-location local manual actions
    - Adequacy of human-machine interface at the remote shutdown and/or local panels
- Guidance is method-neutral
  - Specific HRA method is analyst choice
  - General considerations are outlined and applicable regardless of method chosen
  - Specifics of treatment are method-dependent
    - e.g., how you handle/quantify a performance shaping factor (PSF)

Fire PRA Training, Sept. and Nov., 2008
Introduction and Overview

Slide 29

A Collaboration of U.S. NRC Office of Nuclear Regulatory Research (RES) & Electric Power Research Institute (EPRI)

Slide 30

Notes:

Task 14: Fire Risk Quantification

- Objective: To quantify fire-induced CDF and LERF
- Covered in limited detail
- Relatively straight-forward roll-up for fire scenarios considering
  - Ignition frequency
  - Scenario-specific equipment and cable damage
  - Equipment failure modes and likelihoods
  - Credit for fire mitigation (detection and suppression)
  - Fire-specific HEPs
  - Quantification of the FPRA plant response model

Fire PRA Training, Sept. and Nov., 2008
Introduction and Overview

Slide 30

A Collaboration of U.S. NRC Office of Nuclear Regulatory Research (RES) & Electric Power Research Institute (EPRI)

Slide 31

Task 15: Uncertainty and Sensitivity

- Objective: Provide a process for identifying and quantifying uncertainties in the FPRA and for identifying sensitivity analysis cases
- Covered in limited detail
- Guidance is based on potential strategies that might be taken, but choices are largely left to the analyst
  - e.g., what uncertainties will be characterized as distributions and propagated through the model?

Notes:

SESSION 3c: Circuits/Electrical Module Overview

Slide 32

Notes:

Module 2: Circuits/Electrical

- This module covers those parts of the method specifically related to the identification and tracing of cables, and the analysis of electrical circuit failure modes and likelihood
- Tasks covered are:
  - Task 3: Cable Selection (and Routing)
  - Task 9: Detailed Circuit Analysis
  - Task 10: Failure Mode Likelihood Analysis
  - Support Task B: FPRA Database

Slide 33

Notes:

Task 3: Cable Selection (1 of 2)

- Objectives:
  - To identify/select cables whose fire-induced failure could adversely effect the operation of selected equipment
  - To locate selected cables
- Cables may include Power, Control/Indication, and Instrumentation

Slide 34

Notes:

Task 3: Cable Selection (2 of 2)

- Selected cables need to be routed/located
- Cable routing can be a major commitment of FPRA resources
  - Depends a *lot* on status of existing plant cable information
    - Scope, quality, vintage, method of documentation
  - Tracing cables is a time consuming activity
  - Intent is to allow for "work smart" approaches
    - Iteration to identify and route more cables as needed to support FPRA
- Allowances are made for making "conservative" assumptions about a cable's routing if unknown

Fire PRA Training, Sept. and Nov., 2008
Introduction and Overview

Slide 34

A Collaboration of U.S. NRC Office of Nuclear Regulatory Research (RES) & Electric Power Research Institute (EPRI)

Slide 35

Notes:

Support Task B: FPRA Database (1 of 2)

- Objective: Develop a database to support query needs of the FPRA
- FPRA will ask: "if a fire damages everything within some spatial region, what equipment and cables are lost?"
  - The regions is defined by the fire scenarios (covered in Module 3)
  - The region may be as large as a combination of two or more fire areas or as small as a single raceway
- Because cables tend to be the primary driver, the FPRA Database is covered in the electrical module

Fire PRA Training, Sept. and Nov., 2008
Introduction and Overview

Slide 35

A Collaboration of U.S. NRC Office of Nuclear Regulatory Research (RES) & Electric Power Research Institute (EPRI)

Slide 36

Notes:

Support Task B: FPRA Database (2 of 2)

- The electrical module will describe the needs served by the database:
  - Database functionality needs
  - How to assess capability of exiting systems
  - How to implement a structured process to obtain required capability
  - Some discussion of the potential role of new software and data management tools

Slide 37

Notes:

Task 9: Detailed Circuit Failure Analysis (1 of 2)

- Objectives:
  - To identify circuit responses (failure modes) to fire-induced cable failures
  - To screen out cables that do not impact the ability of a component to complete its credited function
- This is not about failure mode likelihoods (that is task 10)
- This is about defining the effects that cable failure can (or cannot have) on selected equipment
  - e.g., what cables can, or cannot, cause spurious actuations?

Slide 38

Task 9: Detailed Circuit Failure Analysis (2 of 2)

- Fundamentally a deterministic analysis of cable failure modes and effects
- Module will cover:
  - Those failure modes that are, and are not, considered plausible for various cable/circuit configurations and applications
  - Underlying assumptions of the analysis
  - Role of existing analyses (e.g., Appendix R SSD analysis)
  - Steps of the analysis

Notes:

Slide 39

Task 10: Circuit Failure Modes Likelihood (1 of 2)

- Objective: To establish first order estimates of the conditional probability, given failure of a specific cable, that the circuit will respond in a specific way
- This one is about the likelihood that certain equipment failure modes will be observed given fire-induced cable failure
  - Will the equipment spuriously actuate, or
  - Will it be a loss of function failure?
  - What is the relative likelihood of each failure mode of interest?

Notes:

Slide 40

Task 10: Circuit Failure Mode Likelihood (2 of 2)

- This is a probabilistic analysis
- Based largely on existing data including
  - The EPRI/NEI cable tests including the NRC/RES collaboration
  - The EPRI expert panel
- Module will include
  - Existing knowledge base
  - Underlying assumptions
  - Key factors in the analysis
  - Analysis approach and methods

Notes:

SESSION 3d: Fire Analysis Module Overview

Slide 41

Notes:

Module 3: Fire Analysis

- This module covers those parts of the method specifically related to the identification and analysis of fires, fire damage, and fire protection systems and features
- Tasks covered are:
  - Task 1: Plant Partitioning
  - Task 6: Fire Ignition Frequency
  - Task 8: Scoping Fire Modeling
  - Task 11: Detailed Fire Scenario Analysis
  - Task 13: Seismic/Fire Interactions (briefly)
  - Support Task A: Plant Walkdowns

Slide 42

Notes:

Task 1: Plant Partitioning (1 of 3)

- Objectives:
  - To define the global analysis boundary of the FPRA
  - To divide the areas within the global analysis boundary into fire compartments
- The fire compartments become the "basic unit" of analysis
  - Generally we screen based on fire compartments
  - Risk results are often rolled up to a fire compartment level

Slide 43

Notes:

Task 1: Plant Partitioning (2 of 3)

- The global analysis boundary is intended to be a liberal definition of the region potential interest
  - It will likely encompass areas of essentially no risk, but that is OK, screening steps will identify these
- The fire compartments are a matter of analysis convenience
  - Fire compartments may equal fire areas if you so choose
  - You can also subdivide fire areas into multiple compartments
  - The sum of the fire compartments must equal the global analysis boundary
    - No omissions, no overlap between compartments

Fire PRA Training, Sept. and Nov., 2008
Introduction and Overview

Slide 43

A Collaboration of U.S. NRC Office of Nuclear Regulatory Research (RES) & Electric Power Research Institute (EPRI)

Slide 44

Notes:

Task 1: Plant Partitioning (3 of 3)

- Ultimately, the FPRA is expected to provide some resolution to each defined fire compartment and to all locations within the global analysis boundary
- Module will cover:
  - Guidance and criteria for defining the global analysis boundary\
  - Guidance and criteria for defining fire compartments
- Ultimately, there is not a lot of new guidance in this task
  - A lot like what was done in the IPEEE days

Fire PRA Training, Sept. and Nov., 2008
Introduction and Overview

Slide 44

A Collaboration of U.S. NRC Office of Nuclear Regulatory Research (RES) & Electric Power Research Institute (EPRI)

Slide 45

Notes:

Task 6: Fire Ignition Frequency (1 of 3)

- Objective: To define fire frequencies suitable to the analysis of fire scenarios at various stages of the FPRA
- Fire frequencies will be needed at various levels of resolution:
  - An entire fire area
  - A fire compartment
  - A group of fire ignition sources (e.g., a bank of electrical cabinets)
  - A single ignition source (e.g., one electrical panel)

Slide 46

Notes:

Task 6: Fire Ignition Frequency (2 of 3)

- Task begins with generic industry-average statistics on fire
  - EPRI fire event database
  - Events filtered for applicability and sorted into ignition source bins
  - Plant-wide fire frequency is provided for each bin
- The real "trick" is to convert the generic values into values specific to your plant and to a given fire scenario
  - Approach is based on ignition source counting and apportionment of the plant-wide frequency based on local population

Slide 47

Task 6: Fire Ignition Frequency (3 of 3)

- Quite a bit is new relative to fire frequency:
  - The fire event data have been re-analyzed entirely to suit the new method
    - That means older IPEEE-vintage frequencies are obsolete
  - There has been a switch towards component-based fire frequencies and away from generic room-based fire frequencies
  - Some areas have received special treatment
    - e.g., main control room

Notes:

Slide 48

Task 8: Scoping Fire Modeling (1 of 2)

- Objective: To identify (and screen out) fire ignition sources that are non-threatening and need not be considered in detailed fire modeling
- Non-threatening means they cannot:
  - Spread fire to other combustibles, or
  - Damage any FPRA equipment item or cable

Notes:

Slide 49

Notes:

Task 8: Scoping Fire Modeling (2 of 2)

- Scoping fire modeling introduces a number of key concepts associated with the treatment of fire sources and damage targets
  - The Fire Severity Profile approach
  - Damage criteria for cables and equipment
  - Assumptions associated with specific fire sources

Slide 50

Notes:

Task 11: Detailed Fire Modeling (1 of 3)

- Objective: To identify and analyze specific fire scenarios
- Divided into three sub-tasks:
  - 12a: General fire compartments (as individual risk contributors)
  - 12b: Main Control Room analysis
  - 12c: Multi-Compartment fire scenarios

Slide 51

Task 11: Detailed Fire Modeling (2 of 3)

- Task 11 involves many key elements
  - Selection of specific fire scenarios
    - Combinations of fire sources and damage targets
  - Analysis of fire growth/spread
    - Application of fire models
  - Analysis of fire damage
    - Time to failure
  - Analysis of fire detection and suppression

Notes:

Slide 52

Task 11: Detailed Fire Modeling (3 of 3)

- Task 11 comes with a wide range of supporting appendices including:
  - Specific fire sources such as high energy arc faults, turbine generator fires, and hydrogen fires
  - Treatment of fire severity and severity factors
  - Treatment of manual fire suppression
  - Treatment for main control board fires
- Module will cover key appendices

Notes:

Slide 53

Task 13: Seismic/Fire Interactions

- Objective: A *qualitative* assessment of potential fire/seismic interactions
- Module will cover this task *briefly*
  - No significant changes from IPEEE guidance (e.g., the Fire PRA Implementation Guide)

Notes:

SESSION 3e: Sample Exercises / Sample Plant

Slide 54

Notes:

Sample Problems / Sample Plant

- All modules will involve hands-on exercises
  - Intent: To illustrate *key aspects* of the methodology through a cohesive set of sample problems
- All exercises are built around a common sample plant – the SNPP
- The exercises are designed such that taking all modules together presents a fairly complete picture of the FPRA methodology
  - Not every task is covered by the SNPP sample problems
  - Not every aspect of covered tasks are illustrated

Slide 55

Notes:

The SNPP: Intent and Approach

- The SNPP is not intended to reflect either regulatory compliance or good engineering practice
  - It is purely an imaginary construct intended to highlight key aspects of the methodology – nothing more!
- The SNPP has been kept as simple as possible while still serving the needs of the training modules
- Aspects of the plant are assumed for purposes of the training exercises, e.g.:
  - BOP equipment not covered in detail
  - Some systems are assumed to remain available
  - Details will be provided in each module

Slide 56

The SNPP: Plant Characteristics

- PWR with one primary coolant loop
  - One steam generator, one RCP, one pressurizer
  - Shared chemical volume control system
  - Multiple train injection system
  - Residual heat removal system
- Secondary side includes:
  - Main steam and feedwater loop for the single steam generator
  - Multiple train aux. feedwater to provide decay heat removal
- Additional specifications in Chapter 2 of handouts

Notes:

Slide 57

The SNPP: Primary Systems P&ID

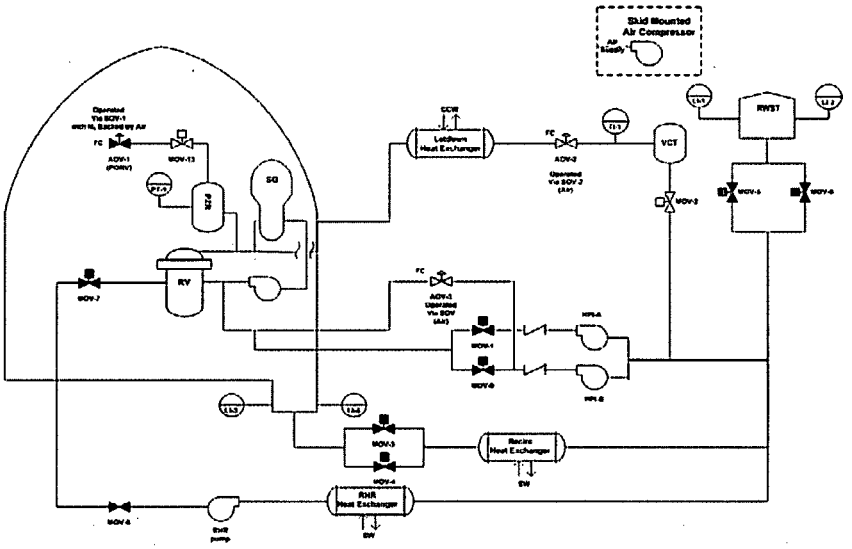

Fire PRA Training, Sept. and Nov., 2008
Introduction and Overview

Slide 57

A Collaboration of U.S. NRC Office of Nuclear Regulatory Research (RES) & Electric Power Research Institute (EPRI)

Notes:

Slide 58

The SNPP: Secondary Systems P&ID

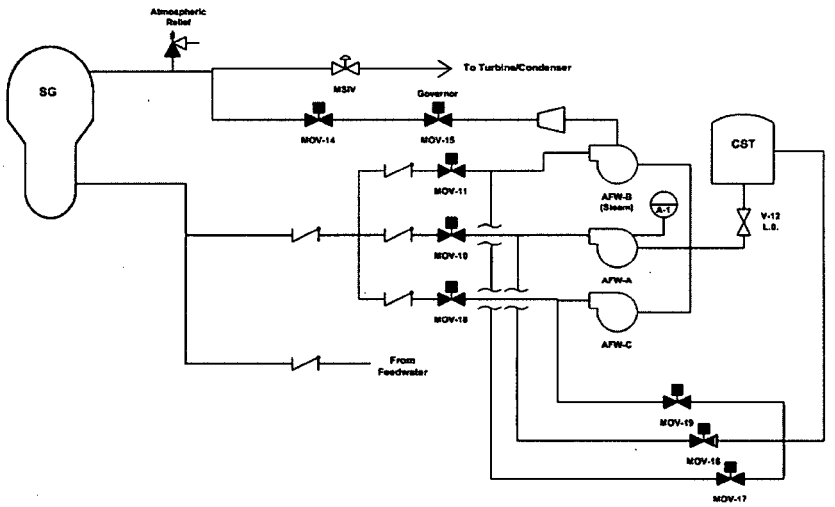

Notes:

Slide 59

The SNPP: Electrical One-Line Diagram

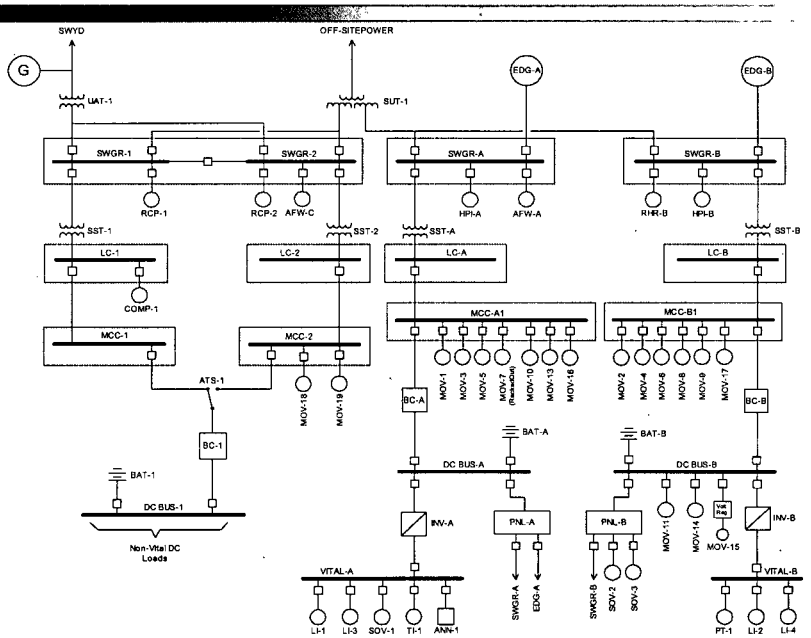

Fire PRA Training, Sept. and Nov., 2008
Introduction and Overview

Slide 59

A Collaboration of U.S. NRC Office of Nuclear Regulatory Research (RES) & Electric Power Research Institute (EPRI)

Notes:

Slide 60

The SNPP: General Plant Layout - Plan

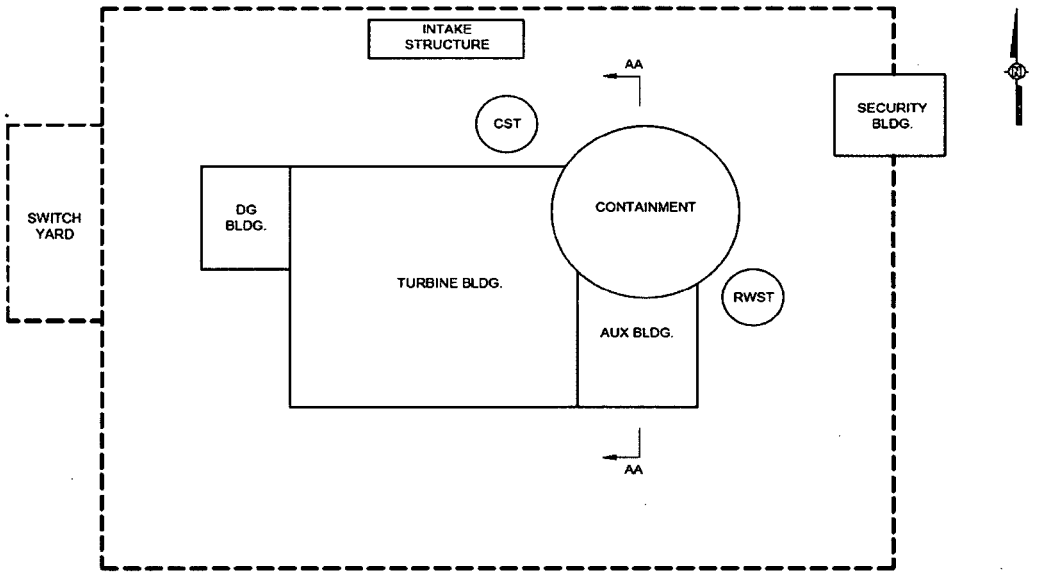

Fire PRA Training, Sept. and Nov., 2008
Introduction and Overview

Slide 60

A Collaboration of U.S. NRC Office of Nuclear Regulatory Research (RES) & Electric Power Research Institute (EPRI)

Notes:

Slide 61

The SNPP: Plant Layout – Elevation Containment and Auxiliary Building

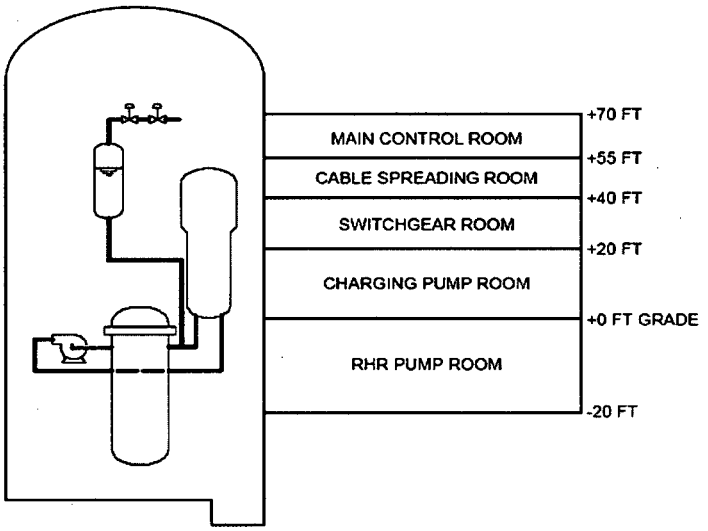

Notes:

Slide 62

The SNPP: Aux. Bld. – RHR Pump Room

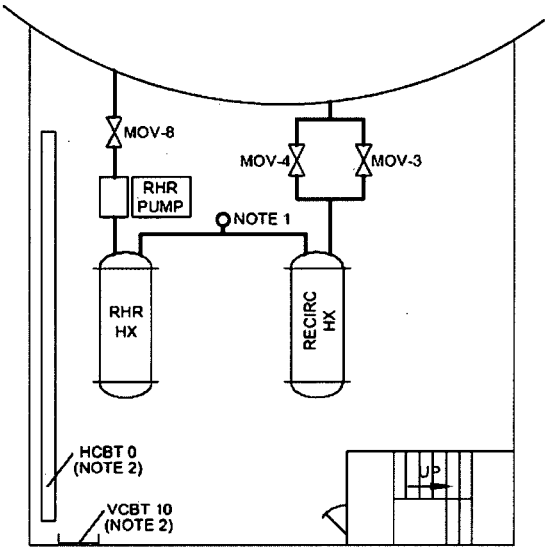

NOTES:

1. VERTICAL PIPE PENETRATION TO UPPER ELEVATION.

2. PENETRATION TO UPER FLOOR IS SEALED.

HCBT: HORIZONTAL CABLE TRAY
VCBT: VERTICAL CABLE TRAY

Notes:

Slide 63

The SNPP: Aux. Bld. – Charging Pump Rm.

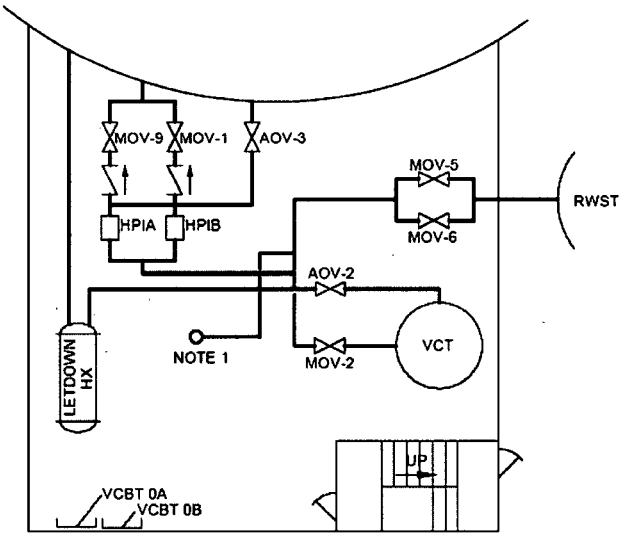

NOTE:

1. VERTICAL PIPE PENETRATING THE FLOOR.

VCBT: VERTICAL CABLE TRAY

Notes:

Slide 64

The SNPP: Aux. Bld. – Switchgear Rooms

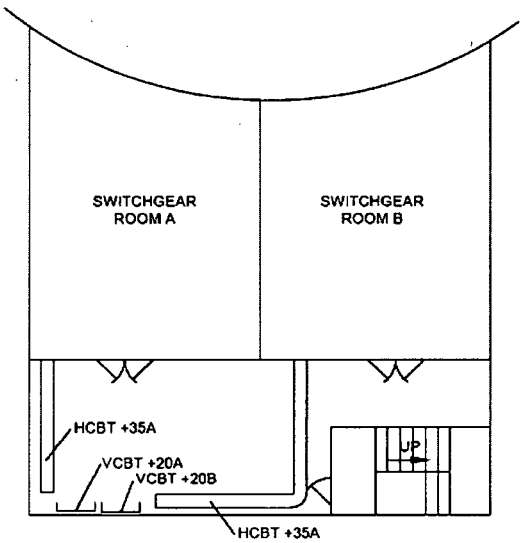

HCBT: HORIZONTAL CABLE TRAY
VCBT: VERTICAL CABLE TRAY

Notes:

Slide 65

The SNPP: Aux. Bld. – Cable Spreading Rm.

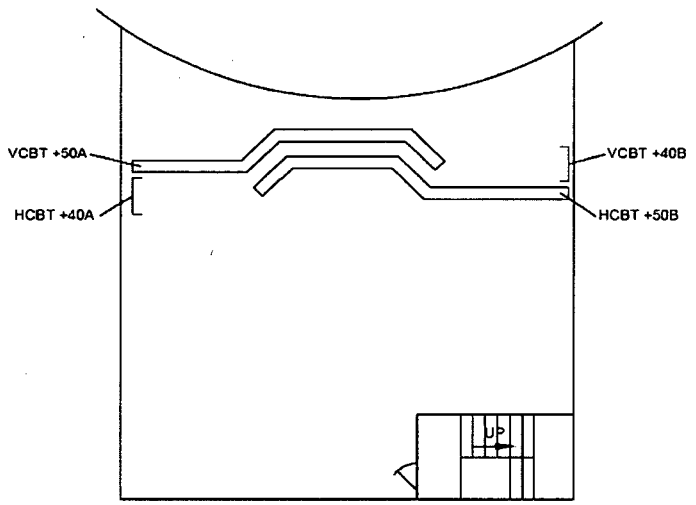

HCBT: HORIZONTAL CABLE TRAY
VCBT: VERTICAL CABLE TRAY

Notes:

Slide 66

The SNPP: Aux. Bld. – Main Control Room

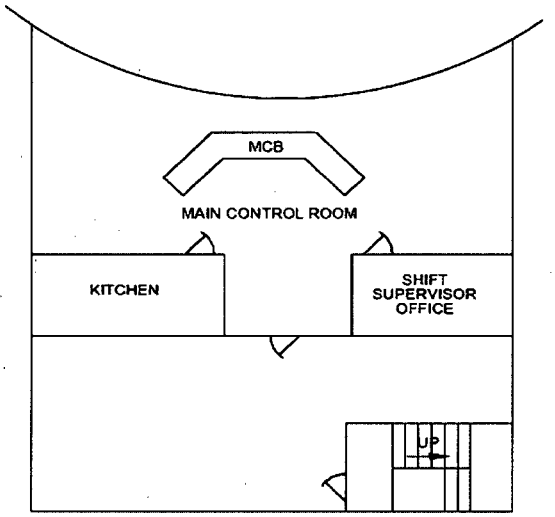

Notes:

Slide 67

The SNPP: Main Control Board Layout

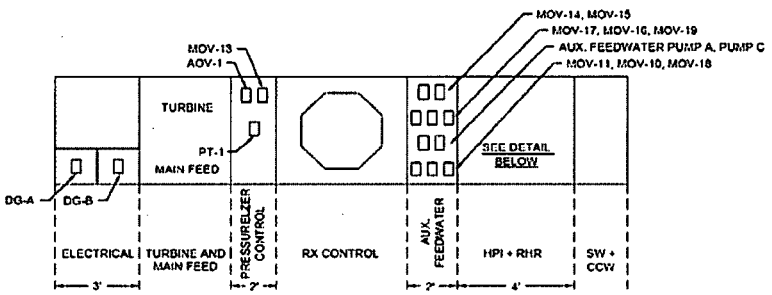

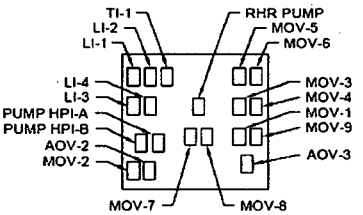

DETAIL FROM ABOVE

Fire PRA Training, Sept. and Nov., 2008
Introduction and Overview

Slide 67

A Collaboration of U.S. NRC Office of Nuclear Regulatory Research (RES) & Electric Power Research Institute (EPRI)

Notes:

Slide 68

The SNPP: Turbine Building

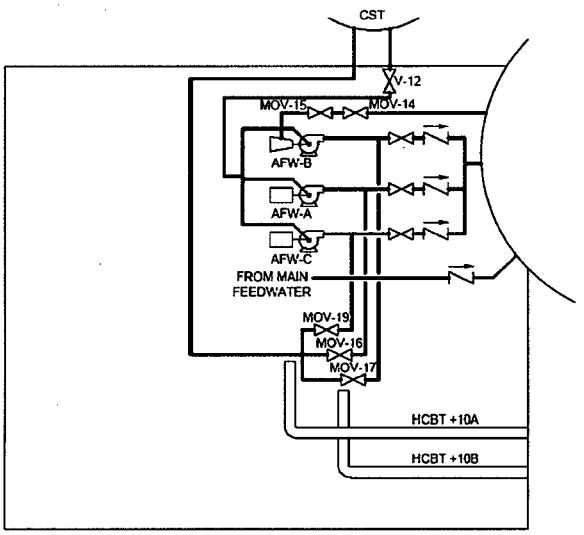

Notes:

Slide 69

Notes:

PART II

EPRI and RES Fire Research Activities

Relevant to Fire PRA

Topics:

- **The ANS/ASME FPRA Standard**
- **The RES-EPRI Collaboration on Fire HRA**

Fire PRA Training, Sept. and Nov., 2008
Introduction and Overview

Slide 69

A Collaboration of U.S. NRC Office of Nuclear Regulatory Research (RES) & Electric Power Research Institute (EPRI)

Slide 70

Notes:

The ASME/ANS Fire PRA Standard (briefly..)

Fire PRA Training, Sept. and Nov., 2008
Introduction and Overview

Slide 70

A Collaboration of U.S. NRC Office of Nuclear Regulatory Research (RES) & Electric Power Research Institute (EPRI)

Slide 71

The Fire PRA Standard

- The ANS Fire PRA Standard has been published
- The technical content has been adopted in whole into Part III of the ASME/ANS PRA standard
  - Pending as a proposed revision to RA-S-2002 (RA-S-200X)
- NRC issued Draft for Comment R.G.1.200, Rev. 2, June 2008
- Be aware that some areas of the standard have evolved beyond the guidance of NUREG/CR-6850 – EPRI TR 1011989
- Particular areas to note:
  - Quantitative screening criteria
  - Treatment of concurrent spurious actuations
  - Instrument cable tracing (to verify diversity/availability)

Notes:

SESSION 4: Fire HRA Guidelines Overview

Slide 1

Notes:

Joint EPRI / NRC Fire Human Reliability Analysis Guidelines Overview

Susan Cooper, USNRC

EPRI-NRC Fire PRA Training,
September and November, 2008

A Collaboration of U.S. NRC Office of Nuclear Regulatory Research (RES) & Electric Power Research Institute (EPRI)

1

Slide 2

Notes:

Presentation Outline

- Project Overview
  - Team
  - Tasks
- Technical Overview
  - Objectives & scope
- Status

A Collaboration of U.S. NRC Office of Nuclear Regulatory Research (RES) & Electric Power Research Institute (EPRI) 2

Slide 3

Notes:

Problem Statement

- NUREG/CR-6850 addresses screening, with conservative data, but not detailed fire HRA
- 6850 Fire HRA approach applied at Nine Mile Point (but not released)
- Over 40% of the USA plants are transitioning to NFPA-805, 3-year time window to complete transition

Slide 4

Fire HRA Team

EPRI

Frank Rahn (Bob Kassawara)
EPRI Project Manager

NRC

Susan Cooper (Kendra Hill)
NRC-RES Project Manager

EPRI

J. Julius & B. Najafi
Jan Grobbelaar & K. Kohlhepp
G. William Hannaman

RES

John Forester (Lead)
Susan Cooper
Stacey Hendrickson

Independent Review Team **
NRC Reps
Utility HRA Reps

A Collaboration of U.S. NRC Office of Nuclear Regulatory Research (RES) & Electric Power Research Institute (EPRI) 4

Notes:

Slide 5

Notes:

Project Overview

1) Data collection
   - Fire events (reviewed historical event data).
   - Considered a range of plant responses (fire response strategies).
   - Some plant interviews (with more during the testing phase).
2) Method Development
   - Started with a review of the EPRI Fire HRA Guideline.
   - Updated NUREG/CR-6850 screening for long time windows.
   - Adding a Fire HRA Scoping (flowchart) method.
   - Detailed Fire HRA based on EPRI approach or ATHEANA.
3) Testing
4) Documentation
   - Joint NUREG/CR & EPRI report, similar to NUREG/CR-6850

A Collaboration of U.S. NRC Office of Nuclear Regulatory Research (RES) & Electric Power Research Institute (EPRI) 5

Slide 6

Notes:

Fire HRA Guidelines: Objectives and Scope

- Identify/analyze existing post-initiator HFEs
- Identify/analyze post-initiator fire response (App R) HFEs
  - Includes Main Control Room abandonment.
- Identify/analyze post-initiator undesired spurious HFEs
- Implement post-initiator fire HEPs in fire PRA model(s)
  - First quantification/screening and/or detailed fire PRA model.
  - Including dependency analysis.
- Out of Scope
  - Pre-initiators (per NUREG/CR-6850).
  - Fire brigade response.

A Collaboration of U.S. NRC Office of Nuclear Regulatory Research (RES) & Electric Power Research Institute (EPRI) 6

Slide 7

Notes:

Fire HRA Approach

- Examine HRA process, see how the process and tasks would change in a post-fire environment or post-fire accident response scenarios
- Done for each of the 3 categories of post-fire actions
  - Existing post-initiator HFEs
  - Post-initiator fire response (App R) HFEs
    - Includes Main Control Room abandonment.
  - Undesired response to spurious HFEs
- Progressive fire HRA tasks reflect fire PRA development
  - Rough, quantitative screening per NUREG/CR-6850.
  - Scoping fire HRA approach for scoping fire models.
  - Detailed fire HRA using EPRI or NRC methods (joint project).

A Collaboration of U.S. NRC Office of Nuclear Regulatory Research (RES) & Electric Power Research Institute (EPRI) 7

Slide 8

Notes:

Existing Post-IE HFEs in Base PRA

- **Identification**
  - Base PRA HFEs modeled in fault & event trees.
  - Those portions use to develop the plant response to fire-induced initiating events.
- **Definition** - HFE modeling modified based on fire impacts:
  - Cues and indications may be inaccurate.
  - Time available may be reduced.
  - Response time may increase.
  - Workload may be high.
  - Crew credited for recovery may not be available anymore.
  - Stress may be higher.
  - Accessibility may be impeded due to smoke, heat.
  - Communication may be impacted.

A Collaboration of U.S. NRC Office of Nuclear Regulatory Research (RES) & Electric Power Research Institute (EPRI) 8

Slide 9

Notes:

Fire Response Operator Actions

- Required in response to a fire, as directed by the fire procedure/s e.g.
  - Mitigate or prevent fire damage to equipment
  - Recover existing internal events operator actions
  - Mitigate undesired operator actions in response to spurious indications or actuations
  - Abandon main control room and perform safe shutdown outside the main control room
- Identification process can be
  - Iterative as required in fire PRA
  - Comprehensive based on fire procedure/s
- Similar definition considerations, but procedures, training, and cues can be significantly different that for existing.
- Example HFEs on next slide

Slide 10

Notes:

Fire Response Action Examples

- Identify protected instrumentation channels (to mitigate spurious indications)
- Defeat solid state protection system (to prevent spurious safety injection)
- Control auxiliary feedwater locally by throttling valves manually and starting / stopping pumps
- Place back-up indication panels in service
- Obtain steam generator level locally
- De-energize all ADS valves
- Close HPCI steam supply valve locally
- Align 4 kV bus by locally operating breakers

Slide 11

Notes:

Undesired Response to Spurious Operations

- A definition of an undesired operator action is a well intentioned operator action that unintentionally aggravates the scenario
  - Operators are trained to (1) believe their instrumentation and (2) to follow their procedures
- To be identified within the context of the accident progression
  - Emergency operating procedures
  - Annunciator response procedures

Slide 12

Notes:

Fire HRA Guideline Summary

1. Standard HRA process used for Fire HRA modeling:
   - Based on other processes (e.g., NUREG-1792, EPRI Fire HRA Guidelines, SHARP1, ATHEANA)
2. Fire HRA steps:
   - **Identification & definition** of human failure events (HFEs):
     - Substantial guidance provided, including feasibility test
     - Feasibility Evaluation (Go / No-Go) example criteria
       - Sufficient time available to complete action
       - Sufficient manpower
       - Procedures & cues exist
   - **NUREG/CR-6850 screening**:
     - Refinement/relaxation for areas identified in NUREG/CR-6850 implementation
   - **Qualitative HRA analysis** activities described:
     - Certain activities required for all analyses; others only for specific detailed HRA methods

Slide 13

Notes:

Fire HRA Guideline Summary (cont.)

2. Fire HRA steps: (continued)
   - **Scoping Fire HRA** method added (new):
     - Developed to address the majority of HFEs, thereby conserving HRA resources
     - Guidance being developed to aid reproducibility & ability to review
     - Can be used for defined scenario contexts that are generalized & constrained with respect to PSFs, etc.
     - Current format: decision trees
   - Used existing methods for **detailed Fire HRA**, with performance shaping factors modified for Fire PRA:
     - EPRI Cause-Based Decision Tree & HCR/ORE; plus THERP
     - ATHEANA

A Collaboration of U.S. NRC Office of Nuclear Regulatory Research (RES) & Electric Power Research Institute (EPRI) 13

Slide 14

Notes:

Qualitative Analysis includes....

- Performance shaping factors that may impact specific fire scenarios, such as:
  - Timing (primarily increased response times)
  - Instrumentation (i.e., cues for action & potential unavailability or spurious actuation)
  - Stress
  - Procedure quality
  - Workload
  - Complexity

A Collaboration of U.S. NRC Office of Nuclear Regulatory Research (RES) & Electric Power Research Institute (EPRI) 14

Slide 15

Notes:

Quantification Methods

- Fire HRA **quantification method can vary**, commensurate with the Fire PRA task where it is modeled, such as:
  - **NUREG/CR-6850 HRA screening** for first quantification
    - Revised NUREG/CR-6850 to reduce conservatism for long term actions in sets 1 and 2 (for actions after the fire is out).
  - **Scoping Fire HRA** method added as fire PRA iteratively quantified to refine the quantification of areas
  - **Detailed Fire HRA** for more detailed scenarios
    - Using existing methods with performance shaping factors modified for Fire PRA
      - ATHEANA
      - EPRI Cause-Based Decision Tree & Human Cognitive Reliability / Operator Reliability Experiments

Slide 16

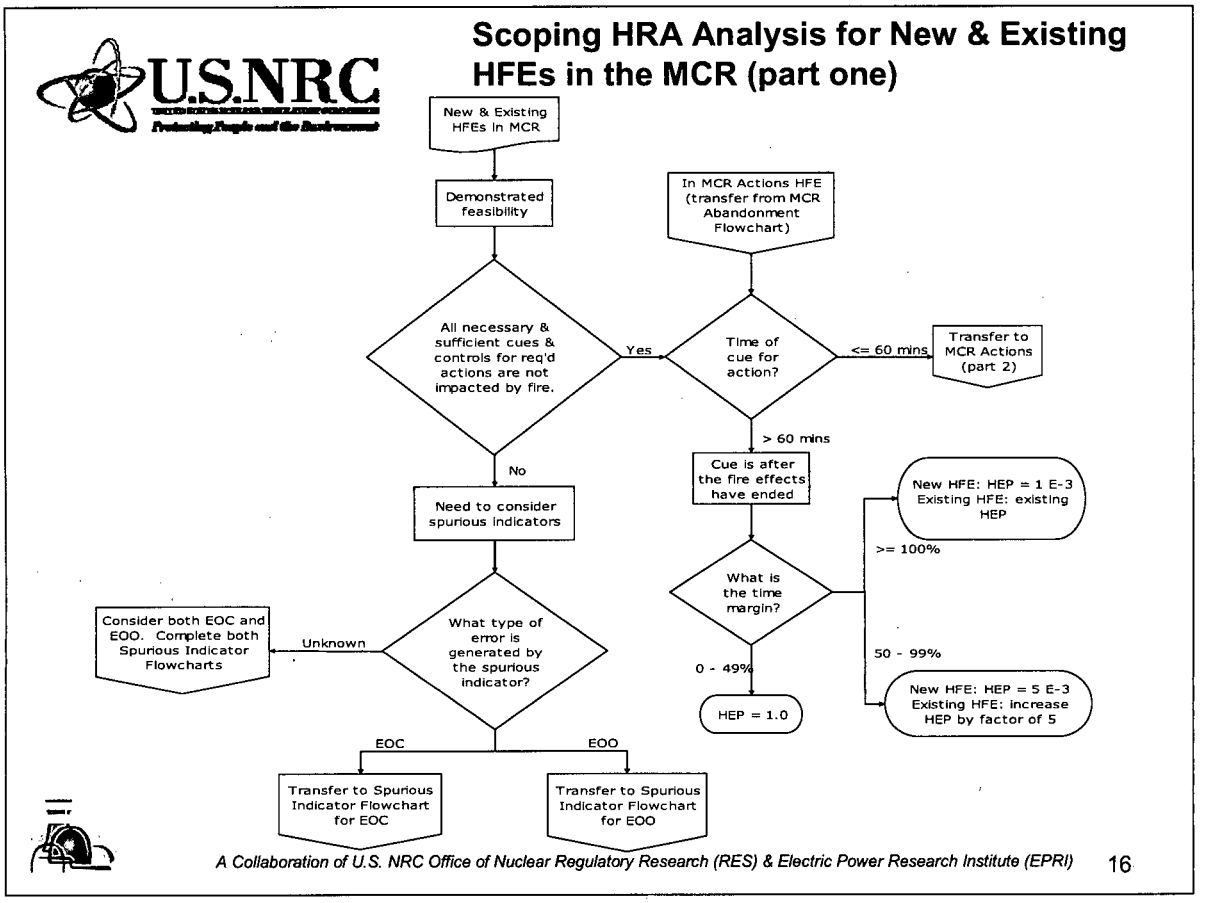

Notes:

Slide 17

Scoping HRA Analysis for New & Existing HFEs in the MCR (part two)

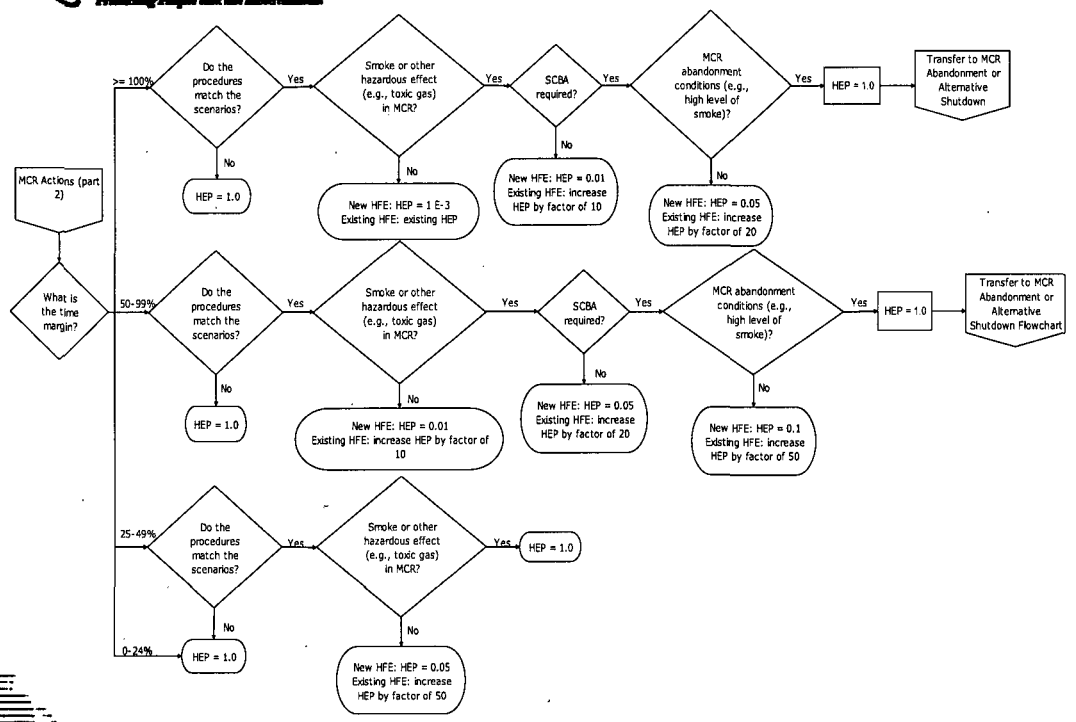

A Collaboration of U.S. NRC Office of Nuclear Regulatory Research (RES) & Electric Power Research Institute (EPRI) 17

Notes:

Slide 18

Notes:

Joint NRC / EPRI Fire HRA Schedule

- Started March 5, 2007
- Meetings held June, July, Sept & Nov'07
- First integrated draft May 2008
- 1st peer review in June 2008
- Testing at 2 plants (in progress)
- 2nd peer review planned
- Public comment period planned for 2008/2009
- Publication scheduled for Summer 2009

A Collaboration of U.S. NRC Office of Nuclear Regulatory Research (RES) & Electric Power Research Institute (EPRI) 18

Slide 19

Notes:

Fire HRA Peer Review & Testing

Peer Review Phase-1: NRC and industry team with 8 reviewers

- In general, was the **right approach** taken and implemented?
  - Is the technical approach sound and reasonable?
  - Are the selected HRA models appropriate for the application?
  - Are the assumptions presented in this methodology reasonable?
  - Does the guidance meet its stated objectives?

Testing

- Plant 1: Conducted in August, tested the flowcharts
- Plant 2: Scheduled for September

Peer Review Phase-2:

- Phase-2 to be conducted after testing
  - Were the issues identified during the phase one review and testing addressed?
  - After addressing any issues does the method still meet the Phase-1 criteria?

A Collaboration of U.S. NRC Office of Nuclear Regulatory Research (RES) & Electric Power Research Institute (EPRI) 19

Slide 20

Notes:

Fire HRA Guideline Summary

1. Standard HRA process used for Fire HRA modeling
2. Developing Fire HRA methodology & guidelines:
   - Relaxation added to NUREG/CR-6850 screening
   - Scoping Fire HRA method added (new)
   - Used existing methods for detailed HRA, with performance shaping factors modified for Fire PRA
     - ATHEANA
     - EPRI Cause-Based Decision Tree & HCR/ORE
3. Test methods & guidelines:
   - Screening HEPs as well as HEPs supporting detailed fire scenarios
4. Coordinated between the NRC and Industry via the EPRI HRA Users Group

A Collaboration of U.S. NRC Office of Nuclear Regulatory Research (RES) & Electric Power Research Institute (EPRI) 20

MODULE 1:

PRA/HRA (SYSTEMS ANALYSIS)

INTRODUCTION

With the adoption of NFPA 805 as an acceptable alternative to existing standards for fire protection in NPPs, a systematic approach to performance-based analysis was developed for the quantification of risks associated with fire. An integrated approach to conducting a fire PRA was necessary to combine accident response modeling in response to a fire (including manual actions) and the frequency and progression of fire with fire protection features and systems. PRA is also highly iterative to enable successive refining of results as needed. The seven sessions related to the PRA/HRA (Systems Analysis) module in this part of the NUREG/CP report provide an introduction to many important elements in this risk quantification.

As discussed in the preceding "OVERALL COURSE" part of this report, the PRA/HRA Module includes Technical Tasks 2, 4, 5, 7, 12, 14, 15, and 16 from NUREG/CR-6850. All of these tasks (except Task 16, "Fire PRA Documentation") are discussed in the MODULE 1 SESSIONS summarized below and presented in detail in the remainder of this part of the NUREG/CP report.

SESSION 1a discusses Task 2, "Fire PRA Component Selection," in which the scope of the particular PRA is defined. A procedure is developed for choosing particular plant components to be modeled, generating a list that forms the basis of subsequent systems, electrical, and fire tasks. This task defines the scope of the selected components including equipment that could mitigate core damage, equipment that could cause initiating events, and equipment that could cause spurious actuations.

SESSION 1b presents the exercises for all seven of the Task 2 steps as discussed in Section 1.6.2, "Example Exercises," in the first part of this Volume 1, "OVERALL COURSE," in its Section 1, "COURSE OVERVIEW." Appendix B of this Volume 1 presents the instructor's solution for these exercises.

SESSION 2 discusses Task 5, "Fire Induced Risk Model Development." This task discusses development of a logic model that reflects plant response following a fire. Specific instructions are provided for treatment of fire-specific procedures or preplans. These procedures may impact availability of functions and components or include fire-specific operator actions (e.g., self-induced station blackout).

SESSION 3 discusses Task 4, "Qualitative Screening," and Task 7, "Quantitative Screening." Task 4 identifies fire analysis compartments that can be shown to have little or no risk significance without relying on a quantitative risk analysis of those compartments. Fire compartments may be screened out if they contain no components or cables identified in Task 2 and Task 3[1], and if they cannot lead to a plant trip because of plant procedures, an automatic trip signal, or technical specification requirements. Qualitative screening decreases the work required in later parts of the PRA. Task 7, "Quantitative Screening," discusses an approximate evaluation of quantitative risk associated with each compartment to determine which compartments screen out (i.e., for which detailed analyses will not be performed).

[1] Task 3 from NUREG/CR-6850 is "Fire PRA Cable Selection," in which electric cables are identified that support components selected in Task 2. Task 3 is discussed in detail in Volume 2 ("Module 2: Electrical Analysis") of this NUREG/CP report.

However, approximate (conservatively bounding) residual risks for "screened out" compartments are retained in the final detailed quantification (i.e., Task 14) to ensure that fire risk is not underestimated.

SESSION 4 discusses Task 12a, "Screening Post-Fire HRA," in which human interactions with the plant components vulnerable to fire risk are considered. The task provides structured instructions for identification and inclusion of these actions in the fire PRA. It also provides instructions for estimating screening human error probabilities (HEPs) before detailed fire modeling results (e.g., fire growth and damage behaviors) or detailed circuit analyses (e.g., can the circuit spuriously actuate as opposed to simply assuming it can) have been developed. It does not develop a detailed fire HRA methodology. A number of HRA methods can be adopted for fire with appropriate additional instructions that superimpose fire effects on any of the existing HRA methods such as THERP, CBDT, ATHEANA, etc. This would improve consistency across analyses (i.e., fire and internal events PRA).

SESSION 5 discusses Task 12b, "Post-Fire HRA Detailed Analysis," in which nonscreened HRA-related contributions to the fire risk from plant ignition sources are quantified. For example, it discusses performance shaping factors that should be considered such as staff resources available at the time of the fire, applicability and suitability of their training and experience, suitability of relevant procedural and administrative controls, availability and clarity of instrumentation, time available vs. time needed to complete actions, the environment in which the actions are to be performed, and the accessibility and operability of needed equipment.

SESSION 6 discusses Task 14, "Fire Risk Quantification," in which risks are determined for non "screened out" compartments, and inputs from all other Tasks are compiled (e.g., the residual risk from screened-out compartments from Task 7, etc.).

SESSION 7 discusses Task 15, "Uncertainty and Sensitivity Analysis," where treatment may vary from identification of sources of uncertainty to quantitative estimation and propagation of uncertainties. The treatment may also include one-at-a-time variation of individual parameter values to determine the effect on the overall fire risk (sensitivity analysis).

Session 1a: Fire PRA Component Selection

Slide 1

ELECTRIC POWER RESEARCH INSTITUTE

Science Applications International Corporation

EPRI/NRC-RES FIRE PRA METHODOLOGY

Task 2 - Fire PRA Component Selection

Joint RES/EPRI Fire PRA Workshop
September and November 2008
Bethesda, MD

A Collaboration of U.S. NRC Office of Nuclear Regulatory Research (RES) & Electric Power Research Institute (EPRI)

Notes:

Slide 2

Component Selection
Purpose

- Purpose: describe the procedure for selecting plant components to be modeled in a Fire PRA
- Fire PRA Component List
  - Key source of information for developing Fire PRA Model (Task 5)
    - Used to identify cables that must be located (Task 3)
- Process is iterative to ensure appropriate agreement among fire PRA Component List, Fire PRA Model, and cable identification

Fire PRA Workshop, Bethesda MD, 2008
Task 2: Component Selection

Slide 2

A Collaboration of U.S. NRC Office of Nuclear Regulatory Research (RES) & Electric Power Research Institute (EPRI)

Notes:

Slide 3

Notes:

Task 2: Fire PRA Component Selection
Scope

Fire PRA Component List should include following major categories of equipment:

- Equipment whose fire-induced failure (including spurious actuation) causes an initiating event
  - Model initiating events, not the specific equipment
  - Need to identify worst-case initiator for each compartment
- Equipment needed to perform mitigating safety functions and to support operator actions
- Equipment whose fire-induced failure or spurious actuation may adversely impact credited mitigating safety functions
- Equipment whose fire-induced failure or spurious actuation may cause inappropriate or unsafe operator actions
- Recommended to include passive systems in list even though they are not susceptible to fire

Fire PRA Workshop, Bethesda MD, 2008
Task 2: Component Selection
Slide 3
A Collaboration of U.S. NRC Office of Nuclear Regulatory Research (RES) & Electric Power Research Institute (EPRI)

Slide 4

Notes:

Component Selection
Approach

- Step 1: Identify Internal Events PRA sequences to include in fire PRA Model (necessary for identifying important equipment)
- Step 2: Review Internal Events PRA model against the Fire Safe Shutdown (SSD) Analysis and reconcile differences in the two analyses
- Step 3: Identify fire-induced initiating events based on equipment affected
- Step 4: Identify equipment subject to fire-induced spurious operation that may challenge the safe shutdown capability
- Step 5: Identify additional mitigating, instrumentation, and diagnostic equipment important to human response
- Step 6: Include "potentially high consequence" related equipment
- Step 7: Assemble the Fire PRA Component List

Fire PRA Workshop, Bethesda MD, 2008
Task 2: Component Selection
Slide 4
A Collaboration of U.S. NRC Office of Nuclear Regulatory Research (RES) & Electric Power Research Institute (EPRI)

Slide 5

Component Selection
General Observations

- Two major sources of existing information are used to generate the Fire PRA Component List:
  - Internal Events PRA model
  - Fire Safe Shutdown Analysis (Appendix R assessment)
- Just "tweaking" your Internal Events PRA is probably NOT sufficient – requires additional effort
  - Consideration of fire-induced spurious operation of equipment
  - Potential for undesirable operator actions due to spurious alarms/indications
  - Additional operator actions for responding to fire (e.g., opening breakers to prevent spurious operation)
- Just crediting Appendix R components may NOT be conservative
  - True that all other components in Internal Events PRA will be assumed to fail, but:
    - May be missing components with adverse risk implications (e.g., event initiators or complicate SSD response)
    - May miss effects of non-modeled components on credited (modeled) systems/components and on operator performance
    - Still need to consider non-credited components as sources of fires

Fire PRA Workshop, Bethesda MD, 2008
Task 2: Component Selection

Slide 5

A Collaboration of U.S. NRC Office of Nuclear Regulatory Research (RES) & Electric Power Research Institute (EPRI)

Notes:

Slide 6

Task 2: Fire PRA Component Selection
Overview of Scope

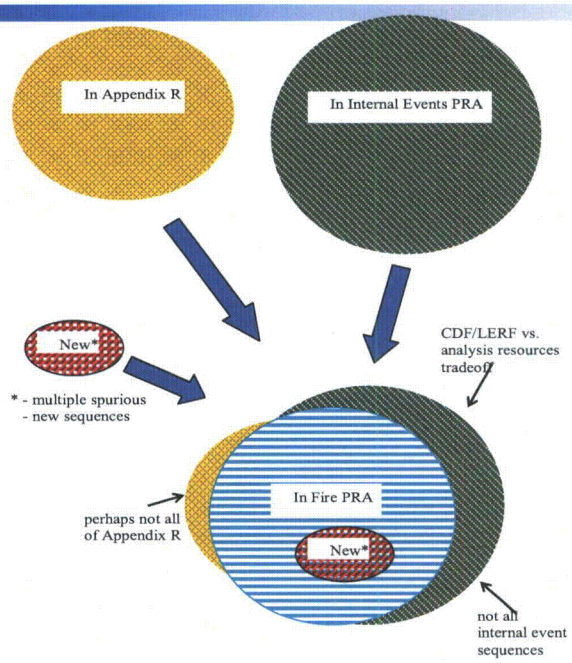

Fire PRA Workshop, Bethesda MD, 2008
Task 2: Component Selection

Slide 6

A Collaboration of U.S. NRC Office of Nuclear Regulatory Research (RES) & Electric Power Research Institute (EPRI)

Notes:

Slide 7

Notes:

Task 2: Fire PRA Component Selection
Key Assumptions

The following key assumptions underlie this procedure:

- A good quality Internal Events PRA and App. R Safe Shutdown Analysis are available
- Analysts have considerable collective knowledge and understanding of plant systems, operator performance, the Internal Events PRA, and App. R SSD analysis
- Steps 4 thru 6 are applied to determine an appropriate number of spurious actuations to consider
  - Configurations, timing, length of sustained spurious actuation, cable material, etc. among reasons to limit what will be modeled
  - Note that HS duration is a current FAQ topic…

Fire PRA Workshop, Bethesda MD, 2008
Task 2: Component Selection
Slide 7
A Collaboration of U.S. NRC Office of Nuclear Regulatory Research (RES) & Electric Power Research Institute (EPRI)

Slide 8

Notes:

From: Lessons Learned and Insights
In-process FAQs …

- FAQ 08-0051
  - Issue:
    - The guidance does not provide a method for estimating the duration of a hot short once formed
    - This could be a significant factor for certain types of plant equipment that will return to a "fail safe" position if the hot short is removed
  - General approach to resolution:
    - Analyze the cable fire test data to determine if an adequate basis exists to establish hot short duration distributions
  - Status:
    - Initial data analysis has been completed and results are under team review
    - Staff and industry review pending
    - Final revisions, as needed, pending - remove

Fire PRA Workshop, Bethesda MD, 2008
Task 2: Component Selection
Slide 8
A Collaboration of U.S. NRC Office of Nuclear Regulatory Research (RES) & Electric Power Research Institute (EPRI)

Slide 9

Notes:

Task 2: Fire PRA Component Selection
Inputs/Outputs

Task inputs and outputs:

- Inputs from other tasks: equipment considerations for operator actions from Task 12 (Post-Fire HRA)
- Could use inputs from other tasks to show equipment does not have to be modeled (e.g., Task 9 – Detailed Circuit Analysis or Task 11 - Fire Modeling to show an equipment item cannot spuriously fail or be affected by possible fires)
- Outputs to Task 3 (Cable Selection) and Task 5 (Risk Model)
- Choices made in this task set the overall analysis scope

Fire PRA Workshop, Bethesda MD, 2008
Task 2: Component Selection
Slide 9
A Collaboration of U.S. NRC Office of Nuclear Regulatory Research (RES) & Electric Power Research Institute (EPRI)

Slide 10

Notes:

Task 2: Fire PRA Component Selection
Steps In Procedure/Details

Step 1: Identify sequences to include and exclude from Fire PRA

- Some sequences can generally be excluded
  - Sequences requiring passive/mechanical failures that can not be initiated by fires (e.g., pipe-break LOCAs, SGTR, vessel rupture)
  - Sequences that can be caused by a fire but are low frequency (e.g., ATWS)
  - It may be decided to not model certain systems (i.e., assume failed for Fire PRA) thereby excluding some sequences (e.g., main feedwater as a mitigating system not important)
- Possible additional sequences (recommend use of expert panel to address plant specific considerations)
  - Sequences associated with spurious operation (e.g., vessel/SG overfills, PORV opening, letdown or other pressure/level control anomalies)
  - MCR abandonment scenarios and other sequences arising from Fire Emergency Procedures (FEPs) and/or use of local manual actions

Fire PRA Workshop, Bethesda MD, 2008
Task 2: Component Selection
Slide 10
A Collaboration of U.S. NRC Office of Nuclear Regulatory Research (RES) & Electric Power Research Institute (EPRI)

Slide 11

Notes:

Task 2: Fire PRA Component Selection
Steps In Procedure/Details

Step 2: Compare Internal Events PRA model to App. R SSD list

- Identify and reconcile:
  - differences in functions, success criteria, and sequences (e.g., App. R-no feed/bleed; PRA-feed/bleed)
  - front-line and support system differences (e.g., App. R-need HVAC; PRA-do not need HVAC)
  - system and equipment differences due to end state and mission considerations (e.g., App. R-cold shutdown; PRA-hot shutdown)
  - other miscellaneous equipment differences.
- Include review of manual actions (e.g., actions needed for safe shutdown) in conjunction with Task 12

Fire PRA Workshop, Bethesda MD, 2008
Task 2: Component Selection
Slide 11
A Collaboration of U.S. NRC Office of Nuclear Regulatory Research (RES) & Electric Power Research Institute (EPRI)

Slide 12

Notes:

Task 2: Fire PRA Component Selection
Steps In Procedure/Details

Step 3: Identify fire-induced initiating events. Consider:

- Equipment whose failure (including spurious actuation) will cause automatic plant trip
- Equipment whose failure (including spurious actuation) will likely result in manual plant trip, per procedures
- Equipment whose failure (including spurious actuation) will invoke Tech. Spec. LCO necessitating a forced shutdown while fire may still be present (prior EPRI guidance recommended consideration of <8-hr LCO)
- Compartments with none of the above need not have initiator though can conservatively assume simple plant trip

Fire PRA Workshop, Bethesda MD, 2008
Task 2: Component Selection
Slide 12
A Collaboration of U.S. NRC Office of Nuclear Regulatory Research (RES) & Electric Power Research Institute (EPRI)

Slide 13

Task 2: Fire PRA Component Selection
Steps In Procedure/Details

- Since not all equipment/cable locations in the plant (e.g., all BOP) may be identified, judgment involved in 'likely' cable paths
  - Need a basis for any case where routing is not verified
  - Routing by exclusion (e.g., from a fire area, compartment, raceway…) is a common and acceptable approach
- Identify worst-case initiator based on possible initiators and other mitigating equipment likely to be affected
- Should consider spurious event(s) contributing to initiators

Fire PRA Workshop, Bethesda MD, 2008
Task 2: Component Selection

Slide 13

A Collaboration of U.S. NRC Office of Nuclear Regulatory Research (RES) & Electric Power Research Institute (EPRI)

Notes:

Slide 14

Task 2: Fire PRA Component Selection
Steps In Procedure/Details

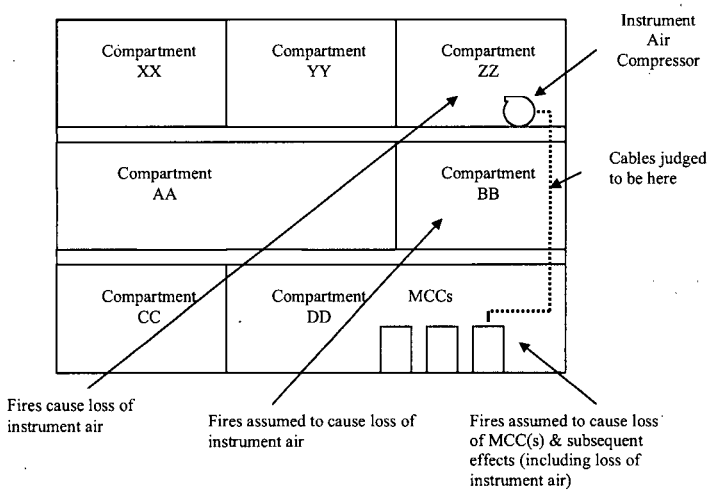

Notes:

Slide 15

Task 2: Fire PRA Component Selection
Steps In Procedure/Details

Step 4: Identify equipment whose spurious actuation may challenge ability to avoid core damage/large early release

- Consider multiple spurious events within each system considering success criteria
- Involves review of system P&IDs and other drawings
- Focus on equipment or failure modes not already on the component list (e.g., flow diversion paths)
- Any new equipment/failure modes should be added to component list for subsequent cable-tracing and circuit analysis

Fire PRA Workshop, Bethesda MD, 2008
Task 2: Component Selection

Slide 15

A Collaboration of U.S. NRC Office of Nuclear Regulatory Research (RES) & Electric Power Research Institute (EPRI)

Notes:

Slide 16

Task 2: Fire PRA Component Selection
Flow Diversion Path Examples

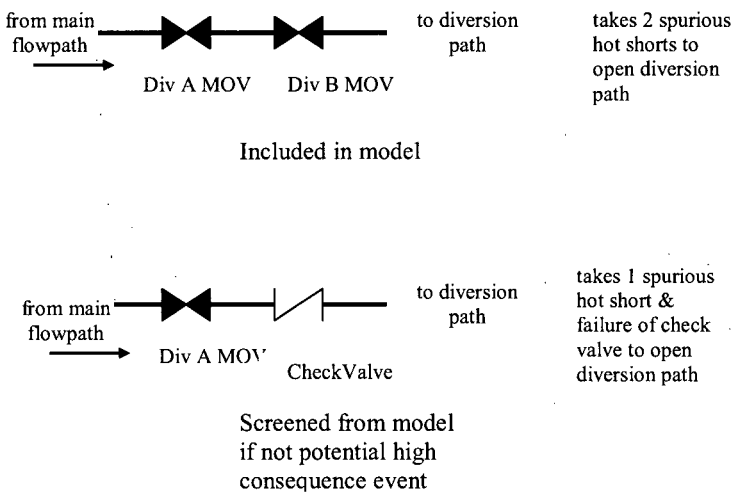

Notes:

Slide 17

Task 2: Fire PRA Component Selection
Example of a *New Failure Mode of a Component*

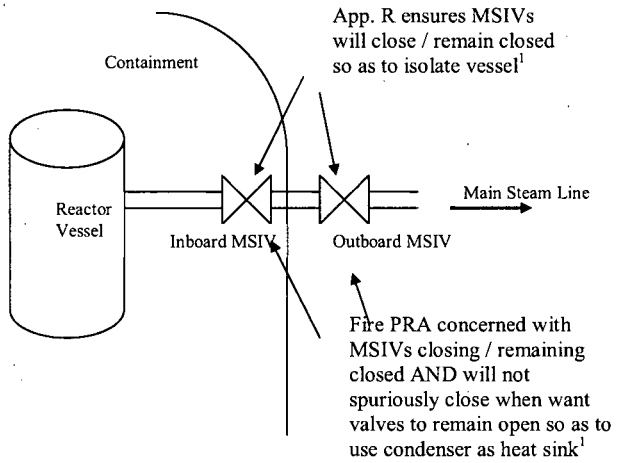

[1] different cables and corresponding circuits and analyses may need to be accounted for

Notes:

Slide 18

Notes:

Task 2: Fire PRA Component Selection
Steps In Procedure/Details

Step 5: Identify additional instrumentation/diagnostic equipment important to operator response (level of redundancy matters!)

- Identify human actions of interest in conjunction with Task 12
- Identify instrumentation and diagnostic equipment associated with credited and potentially harmful human actions considering spurious indications related to each action
  - Is there insufficient redundancy to credit desired actions in EOPs/FEPs/ARPs in spite of failed/spurious indications?
  - Can a spurious indication(s) cause an undesired action because action is dependent on an indication that could be 'false'?
  - If yes – put indication on component list for cable/circuit review
- Watch for new/expanded guidance to be developed by the RES/EPRI fire HRA collaboration…

Fire PRA Workshop, Bethesda MD, 2008
Task 2: Component Selection
Slide 18
A Collaboration of U.S. NRC Office of Nuclear Regulatory Research (RES) & Electric Power Research Institute (EPRI)

Slide 19

Notes:

Task 2: Fire PRA Component Selection
Steps In Procedure/Details

Guidance on identification of harmful spurious operating instrumentation and diagnostic equipment:

- Assume instrumentation is its normal configuration
- Focus on instrumentation with little redundancy
  - Note that fire PRA standard has language on this subject (i.e., verification of instrument redundancy in fire context)
- When verification of a spurious indication is required (and reliably performed), it may be eliminated from consideration
- When multiple and diverse indications must spuriously occur, those failures can be eliminated if the HRA shows that such failures would not likely cause a harmful operator action
- Include spurious operation of electrical equipment that would cause a faulty indication and harmful action
- Include inter-system effects

Fire PRA Workshop, Bethesda MD, 2008
Task 2: Component Selection
Slide 19
A Collaboration of U.S. NRC Office of Nuclear Regulatory Research (RES) & Electric Power Research Institute (EPRI)

Slide 20

Notes:

Task 2: Fire PRA Component Selection
Steps In Procedure/Details

Step 6: Include "potentially high consequence" related equipment

- High consequence events are one or more related failures at least partially caused by fire that:
  - by themselves cause core damage and large early release, or
  - single component failures that cause loss of entire safety function and lead directly to core damage
- Example of first case: spurious opening of two valves in high-pressure/low pressure RCS interface, leading to ISLOCA
- Example of second case: spurious opening of single valve that drains safety injection water source

Fire PRA Workshop, Bethesda MD, 2008
Task 2: Component Selection

Slide 20

A Collaboration of U.S. NRC Office of Nuclear Regulatory Research (RES) & Electric Power Research Institute (EPRI)

Slide 21

Notes:

Task 2: Fire PRA Component Selection
Steps In Procedure/Details

Step 7: Assemble Fire PRA component list. Should include following information:

- Equipment ID and description (may be indicator or alarm)
- System designation
- Equipment type and location (at least compartment ID)
- PRA event ID and description
- Normal and desired position/status
- Failed electrical/air position
- References, comments, and notes

Fire PRA Workshop, Bethesda MD, 2008
Task 2: Component Selection

Slide 21

A Collaboration of U.S. NRC Office of Nuclear Regulatory Research (RES) & Electric Power Research Institute (EPRI)

Slide 22

Notes:

Sample Problem Exercise for Task 2, Step 1

- Distribute blank handout for Task 2, Step 1
- Distribute completed handout for Task 2, Step 1
- Question and Answer Session

Fire PRA Workshop, Bethesda MD, 2008
Task 2: Component Selection
Slide 22
A Collaboration of U.S. NRC Office of Nuclear Regulatory Research (RES) & Electric Power Research Institute (EPRI)

Slide 23

Notes:

Sample Problem Exercise for Task 2, Steps 2 and 3

- Distribute blank handout for Task 2, Step 2
- Distribute completed handout for Task 2, Step 2 Question and Answer Session
- Discuss Step 3
- Question and Answer Session

Fire PRA Workshop, Bethesda MD, 2008
Task 2: Component Selection
Slide 23
A Collaboration of U.S. NRC Office of Nuclear Regulatory Research (RES) & Electric Power Research Institute (EPRI)

Slide 24

Notes:

Sample Problem Exercise for Task 2, Steps 4 through 6

- Distribute blank handout for Task 2, Steps 4 through 6
- Distribute completed handout for Task 2, Steps 4 through 6
- Question and Answer Session

Fire PRA Workshop, Bethesda MD, 2008
Task 2: Component Selection

Slide 24

A Collaboration of U.S. NRC Office of Nuclear Regulatory Research (RES) & Electric Power Research Institute (EPRI)

Slide 25

Notes:

Sample Problem Exercise for Task 2, Step 7

- Distribute blank handout for Task 2, Step 7
- Distribute completed handout for Task 2, Step 7
- Question and Answer Session

Fire PRA Workshop, Bethesda MD, 2008
Task 2: Component Selection

Slide 25

A Collaboration of U.S. NRC Office of Nuclear Regulatory Research (RES) & Electric Power Research Institute (EPRI)

Session 1b: Example Exercises

Step 1: Identify Internal Events PRA Sequences to be Included (and those to be excluded) in the Fire PRA Model

INITIATING EVENTS IN THE PRA MODEL					
Initiator	**Average Frequency (per yr)**	**Description**	**Accident Sequence or Event Tree Model**	**Address in Fire PRA Model? (Y or N)**	**Comments**
%T1	7.23E-01	Reactor Trip	Transient Event Tree		
%T2	9.33E-02	Loss of Condenser Vacuum	Transient Event Tree		
%T3	4.13E-01	Turbine trip	Transient Event Tree		
%T4	3.73E-02	Loss of Main Feedwater	Transient Event Tree		
%T5P	4.25E-02	Loss of Offsite Power (Plant-Centered)	Transient Event Tree		
%T5C	1.02E-02	Loss of Off-Site Power (Grid-Related)	Transient Event Tree		
%T5D	6.26E-03	Loss of Off-Site Power (Weather-Induced)	Transient Event Tree		
%T6	7.35E-03	Steamline/Feed line Break Upstream of Main Steam Isolation valves or Downstream of Feedwater Isolation Valves (Includes Stuck-Open Secondary relief valves)	Main Steamline Break Event Tree		
%T7	5.44E-03	Steamline Break Downstream of	Main Steamline		

INITIATING EVENTS IN THE PRA MODEL					
Initiator	**Average Frequency (per yr)**	**Description**	**Accident Sequence or Event Tree Model**	**Address in Fire PRA Model? (Y or N)**	**Comments**
		Main Steam isolation valves (Includes Stuck-Open Secondary relief valves)	Break Event		
%T8	2.94E-04	Loss of 4160 V Bus 1	Transient Event Tree		
%T9	2.94E-04	Loss of 4160 V Bus A	Transient Event Tree		
%T10	2.94E-04	Loss of 4160 V Bus B	Transient Event Tree		
%T11	2.94E-04	Loss of 4160 V Bus 2	Transient Event Tree		
%T12	3.00E-03	Loss of 125 VDC Bus A	Transient Event Tree		
%T13	3.00E-03	Loss of 125 VDC Bus B	Transient Event Tree		
%T15	Fault Tree Model %T15-INIT	Loss of CCW System	Transient Event Tree		
%T16	Fault Tree Model %T16-INIT	Loss of Service Water System	Transient Event Tree		
%T17	Fault Tree Model %T17-INIT	Loss of Instrument Air	Transient Event Tree		
%T21	3.41E-02	Closure of MSIV (1 SG Loop)	Transient Event Tree		
%T22	1.24E-02	Closure of both MSIVs	Transient Event		

INITIATING EVENTS IN THE PRA MODEL					
Initiator	**Average Frequency (per yr)**	**Description**	**Accident Sequence or Event Tree Model**	**Address in Fire PRA Model? (Y or N)**	**Comments**
			Tree		
%T23	1.78E-01	Partial Load Rejection	Transient Event Tree		
%T24	5.79E-02	Spurious Steam Gen. Isolation Signal	Transient Event Tree		
%T25	7.23E-02	Reactor Trip With PORV Opening/Demand	Transient Event Tree		
%T26	Fault Tree Model %T26-INIT	Loss of Power from120 VAC Buses A & B	Transient Event Tree		
%S	6.8E-03	Small LOCA (pipe breaks and RCP seal LOCA)	Small LOCA Event Tree		
%M	9.60E-06	Medium LOCA (pipe breaks)	Medium LOCA Event Tree		
%A	7.77E-05	Large LOCA (pipe breaks)	Large LOCA Event Tree		
%R	7.93E-03	Steam Generator Tube Rupture	SGTR Event Tree		
%I2	2.000E-07	Interfacing Systems LOCA at RCS/RHR Interface (2 MOVs in series)	ISLRHR Sequence (single event model)		
%I3	Fault Tree Model I3QINIT	Interfacing Systems LOCA at RCS/CCW interface (Reactor Coolant	ISLCCW Sequence		

INITIATING EVENTS IN THE PRA MODEL					
Initiator	**Average Frequency (per yr)**	**Description**	**Accident Sequence or Event Tree Model**	**Address in Fire PRA Model? (Y or N)**	**Comments**
		Pump Cooler rupture)			
%VR	2.70E-07	Reactor Vessel Rupture	Single Event in Master Fault Tree		

ACCIDENT SEQUENCE OR EVENT TREE MODELS IN THE PRA				
Accident Sequence or Event Tree Model	**Description**	**Additional Details**	**Address in Fire PRA Model? (Y or N)**	**Comments**
TRA	Transient	Includes transient-induced LOCAs such as stuck-open PORV and RCP seal LOCA		
SLOCA	Small LOCA	Pipe breaks & RCP seal LOCA		
MLOCA	Medium LOCA	Pipe breaks		
LLOCA	Large LOCA	Pipe breaks		
ATWS	Anticipated Transients Without Scram	Reactor Protection System fails safe on loss of power. Trip circuits are highly redundant and confirmed to be physically separated.		
SGTR	Steam Generator Tube Rupture			
MSLB	Main Steamline Break	Includes spurious opening of secondary relief valves.		
ISLCCW	Interfacing Systems LOCA at RCS/CCW interface	Rupture of Reactor Coolant Pump Cooler		
ISLRHR	Interfacing Systems LOCA at RCS/RHR Interface	Fire-induced opening of RHR suction valves		
New?				
New?				

Step 2: Review of the Internal Events PRA Against the Fire Safe Shutdown Analysis

TABLE 1: SYSTEMS IN PRA MODEL				
System	**Description**	**Additional Details**	**Address in Fire PRA Model? (Y or N)**	**Comments**
RCS	Reactor Coolant System	PORV for pressure relief and feed & bleed. Stuck-open PORV causes small LOCA.		
CVCS	Chemical and Volume Control System	Normal charging and letdown functions are not modeled. However, components required to isolate charging and letdown are modeled for HPI mode.		
HPI	High Pressure Injection System	The charging pumps in the CVCS also function as safety injection pumps.		
RHR	Residual Heat Removal System	Shutdown cooling is not modeled		
AFW	Auxiliary Feedwater System	Only Trains A and B are modeled		
MFW	Main Feed Water	Would take considerable effort to get cables involved and their locations		
MS	Main Steam System	Stuck-open secondary relief valves could cause equivalent of mainsteam line break.		

TABLE 1: SYSTEMS IN PRA MODEL				
System	**Description**	**Additional Details**	**Address in Fire PRA Model? (Y or N)**	**Comments**
CS	Containment Spray	Required for recirculation during LOCA		
CF	Containment Fan Coolers	Required for recirculation during LOCA		
CI	Containment Isolation	Modeled in LERF		
ESFAS	Emergency Safeguards Actuation System			
CCW	Component Cooling Water System			
SW	Service Water System			
AC	AC Power (all voltage levels)	To extent power is needed to support equipment in the PRA.		
DG	Emergency Diesel Generators			
DC	DC Power	To extent power is needed to support equipment in the PRA.		
IA	Instrument Air	Required for PORV and other valves. Backup nitrogen is provided for PORV and is what is credited.		

TABLE 1: SYSTEMS IN PRA MODEL				
System	**Description**	**Additional Details**	**Address in Fire PRA Model? (Y or N)**	**Comments**
HVAC-HPI	HVAC in HPI Pump Room	HVAC is required during 24-hr PRA mission		

TABLE 2: SYSTEMS IN APPENDIX R				
System	**Description**	**Additional Details**	**Address in Fire PRA Model? (Y or N)**	**Comments**
RCS	Reactor Coolant System	PORV to prevent spurious opening and consequential small LOCA.		
CVCS	Chemical Volume and Control System	Normal charging and letdown functions are credited.		
RHR	Residual heat Removal System	Shutdown cooling is credited		
AFW	Auxiliary Feedwater System	Trains A&C are credited		
MS	Main Steam System	Secondary relief valves and MSIVs are included to prevent spurious opening causing uncontrolled secondary depressurization.		
CCW	Component Cooling Water System			
SW	Service Water System			
AC	AC Power (all voltage levels)	But certain buses not credited (especially non-safety) if loads not		

TABLE 2: SYSTEMS IN APPENDIX R				
System	**Description**	**Additional Details**	**Address in Fire PRA Model? (Y or N)**	**Comments**
		otherwise required for safe shutdown		
DG	Emergency Diesel Generators			
DC	DC Power	But certain buses not credited (especially non-safety) if loads not otherwise required for safe shutdown		
RCS Instruments	RCS pressure, temperature, nuclear instrumentation, etc	Required for safe shutdown monitoring.		
IA	Instrument Air	Required for PORV and other valves. Backup nitrogen is provided for PORV.		
Secondary Instruments	Steam Generator level, Streamline pressure, etc.	Required for safe shutdown monitoring.		
HVAC-HPI	HVAC in HPI Pump Room	HVAC is required during 72-hr Appendix R mission		
HVAC-AFW	HVAC in AFW Pump Room	HVAC is required during 72-hr Appendix R		

TABLE 2: SYSTEMS IN APPENDIX R				
System	**Description**	**Additional Details**	**Address in Fire PRA Model? (Y or N)**	**Comments**
		mission		

TABLE 3: LIST OF BASIC EVENTS IN MODEL	
Basic Event	**Description**
%I2	Interfacing Systems LOCA at RCS/RHR Interface (2 MOVs in series)
%I3	Interfacing Systems LOCA at RCS/CCW interface (Reactor Coolant Pump Cooler rupture)
%T15	LOSS OF COMPONENT COOLING WATER (CCW)
%T23	PARTIAL LOAD REJECTION
%T25	REACTOR TRIP WITH PORV OPENING
%T3	TURBINE TRIP
%T4	LOSS OF MAIN FEEDWATER
%T1	REACTOR TRIP
AFWA-FTR	AFWA fails to run
AFWA-FTS	AFWA fails to start
AFWB-FTR	AFWB fails to run
AFWB-FTS	AFWB fails to start
AOV-1_FTC	PORV AOV-1 fails to CLOSE
AOV-1_FTO	PORV AOV-1 fails to open
AOV-3_FTC	AOV-3 FAILS TO CLOSE
EPS-120VBUSAF	120V BUS A FAULT
EPS-120VBUSAINVF	FAILURE OF 120V BUS A INVERTER
EPS-125VDCBUSAF	FAULT ON 125V DC BUS A
EPS-125VDCBUSBF	FAULT ON 125V DC BUS B
EPS-125VDCPNLAF	FAULT ON 125V DC PANEL A
EPS-125VDCPNLBF	FAULT ON 125V DC PANEL B
EPS-480VLCAF	480V LOAD CENTER A FAULT
EPS-480VLCAXTF	480V LOAD CENTER A TRANSFORMER FAILS
EPS-480VLCBF	480V LOAD CENTER B FAULT

TABLE 3: LIST OF BASIC EVENTS IN MODEL	
Basic Event	**Description**
EPS-480VLCBXTF	480V LOAD CENTER B TRANSFORMER FAILS
EPS-480VMCCA1F	480V MCC A1 FAULT
EPS-480VMCCB1F	480V MCC B1 FAULT
EPS-4VBUSAF	4KV BUS A FAULT
EPS-4VBUSBF	4KV BUS B FAULT
EPS-BATA	FAILURE OF BATTERY A
EPS-BATB	FAILURE OF BATTERY B
EPS-BCAF	FAILURE OF BATTERY CHARGER A
EPS-BCBF	FAILURE OF BATTERY CHARGER B
EPS-DGAF	FAILURE OF DIESEL GENERATOR A
EPS-DGBF	FAILURE OF DIESEL GENERATOR B
HPIA_FTR	HPIA fails to run
HPIA_FTS	HPIA fails to start
HPIB_FTR	HPIB fails to run
HPIB_FTS	HPIB fails to start
MFWFAIL	MAIN FEEDWATER SYSTEM FAILURE AFTER REACTOR TRIP
MOV-10_FTO	MOV-10 fails to open
MOV-11_FTO	MOV-11 fails to open
MOV-14_FTO	MOV-14 FAILS TO OPEN
MOV-15_FTO	MOV-15 FAILS TO OPEN
MOV-1_FTO	MOV-1 FAILS TO OPEN
MOV-2_FTC	MOV-2 fails to close
MOV-3_FTO	MOV-3 fails to open
MOV-4_FTO	MOV-4 fails to open

TABLE 3: LIST OF BASIC EVENTS IN MODEL	
Basic Event	**Description**
MOV-5_FTC	MOV-5 fails to close
MOV-5_FTO	MOV-5 fails to open
MOV-6_FTC	MOV-6 fails to close
MOV-6_FTO	MOV-6 fails to open
MOV-9_FTO	MOV-9 FAILS TO OPEN
OPER-1	Operator fails to switch over to recirculation
OPER-4	Operator fails to establish feed an bleed cooling
OPER-7	OPERATOR FAILS TO TRIP REACTOR COOLANT PUMP
RCPSEAL	RCP SEAL LOCA GIVEN LOSS OF CCW AND SUCCESSFUL RCP TRIP
SUTF	FAILURE OF START-UP TRANSFORMER (SUT)
UATF	FAILURE OF UNIT AUXILIARY TRANSFORMER (UAT)

Continuation of Step2 and Including Steps 4 thru 6:

TABLE 4: DISPOSTION OF COMPONENTS IN PRA AND APPENDIX R (USE TABLES 1-3 AND FIGURES 1-3)						
Equipment ID	**Equipment Description**	**Power Supply**	**In PRA Model? (Y or N)**	**In Appendix R? (Y or N)**	**Add to Fire PRA Equipment List? (Y or N)**	**Comments**
HPI-A	High pressure safety injection pump A	4.16kV Bus A		Y		
HPI-B	High pressure safety injection pump B	4.16kV Bus B		Y		
RHR-B	RHR pump	4.16kV Bus B		Y		
COMP-1	Instrument air compressor	480 V LC 1		Y		
AFW-A	Motor driven AFW pump A	4.16kV Bus A		Y		
AFW-B	Steam driven AFW Pump B	N/A		N		
AFW-C	AFW Pump C	4.16 kV Bus 2		Y		
AOV-1 (SOV-1)	Pressure operated relief valve	120VAC Bus A		Y (only to ensure remains closed)		
AOV-2 (SOV-2)	Letdown isolation valve	125 VDC Bus B		Y (for normal letdown)		
AOV-3	Charging pump injection valve	125 VDC		Y (for normal		

TABLE 4: DISPOSTION OF COMPONENTS IN PRA AND APPENDIX R (USE TABLES 1-3 AND FIGURES 1-3)						
Equipment ID	**Equipment Description**	**Power Supply**	**In PRA Model? (Y or N)**	**In Appendix R? (Y or N)**	**Add to Fire PRA Equipment List? (Y or N)**	**Comments**
(SOV-3)		Bus B		charging)		
MOV-1	HPI valve	480V MCC A1		N		
MOV-2	VCT isolation valve	480V MCC B1		Y (for normal suction to charging)		
MOV-3	Cont. sump recirc valve	480V MCC A1		N		
MOV-4	Cont. sump recirc valve	480V MCC B1		N		
MOV-5	RWST isolation valve	480V MCC A1		N		
MOV-6	RWST isolation valve	480V MCC B1		N		
MOV-7	RHR inboard suction valve	480V MCC A1		Y (for shutdown cooling)		
MOV-8	RHR outboard suction valve	480V MCC B1		Y (for shutdown cooling)		
MOV-9	HPI valve	480V MCC B1		N		
MOV-10	AFW discharge valve	480V MCC A1		Y		
MOV-11	AFW discharge	125		N		

TABLE 4: DISPOSTION OF COMPONENTS IN PRA AND APPENDIX R (USE TABLES 1-3 AND FIGURES 1-3)						
Equipment ID	**Equipment Description**	**Power Supply**	**In PRA Model? (Y or N)**	**In Appendix R? (Y or N)**	**Add to Fire PRA Equipment List? (Y or N)**	**Comments**
	valve	VDC Bus B				
MOV-13	PORV block valve	480V MCC A1		Y		
MOV-14	AFW turbine steam line isolation valve	125 VDC Bus B		N		
MOV-15	AFW steam inlet throttle valve	125 VDC Bus B		N		
MOV-16	AFW test line isolation valve	480V MCC A1		N		
MOV-17	AFW test line isolation valve	480V MCC B1		N		
MOV-18	AFW C Pump Discharge	480 V MCC-2		Y		
MOV-19	AFW test line isolation valve	480 V MCC-2		N		
V-12	CST isolation valve	N/A		Y (for admin purposes to ensure open)		
LI-1	RWST level	120VAC Bus A		Y		
LI-2	RWST level	120VAC		Y		

TABLE 4: DISPOSTION OF COMPONENTS IN PRA AND APPENDIX R (USE TABLES 1-3 AND FIGURES 1-3)						
Equipment ID	**Equipment Description**	**Power Supply**	**In PRA Model? (Y or N)**	**In Appendix R? (Y or N)**	**Add to Fire PRA Equipment List? (Y or N)**	**Comments**
		Bus B				
LI-3	Cont. sump level	120VAC Bus A		Y		
LI-4	Cont. sump level	120VAC Bus B		Y		
TI-1	Letdown heat exchanger outlet temp	120VAC Bus A		N		
PT-1	RCS pressure	120VAC Bus B		N		
A-1	AFW motor high temp	120VAC Bus A		N		
SWGR-A	Train A 4160 V Bus	SUT-1 EDG-A		Y		
SWGR-B	Train B 4160 V Bus	SUT-1 EDG-B		Y		
SWGR-1	Non-Safety 4160 V Bus	UAT-1 SUT-1		N		
SWGR-2	Non-Safety 4160 V Bus	UAT-1 SUT-1		Y		
SUT-1	Startup Transformer	OSP		Y		
EDG-A	Train A Emergency	PNL-A		Y		

TABLE 4: DISPOSTION OF COMPONENTS IN PRA AND APPENDIX R (USE TABLES 1-3 AND FIGURES 1-3)						
Equipment ID	**Equipment Description**	**Power Supply**	**In PRA Model? (Y or N)**	**In Appendix R? (Y or N)**	**Add to Fire PRA Equipment List? (Y or N)**	**Comments**
	Diesel Generator					
EDG-B	Train B Emergency Diesel Generator	PNL-B		Y		
LC-1	Non-Safety 480 V Load Center	SST-1		N		
LC-2	Non-Safety 480 V Load Center	SST-2		Y		
LC-A	Train A 480 V Load Center	SST-A		Y		
LC-B	Train B 480 V Load Center	SST-B		N		
SST-1	Non-Safety Station Service Transformer	SWGR-1		N		
SST-2	Non-Safety Station Service Transformer	SWGR-2		Y		
SST-A	Train A Station Service Transformer	SWGR-A		Y		
SST-B	Train B Station Service Transformer	SWGR-B		N		

TABLE 4: DISPOSTION OF COMPONENTS IN PRA AND APPENDIX R (USE TABLES 1-3 AND FIGURES 1-3)						
Equipment ID	**Equipment Description**	**Power Supply**	**In PRA Model? (Y or N)**	**In Appendix R? (Y or N)**	**Add to Fire PRA Equipment List? (Y or N)**	**Comments**
MCC-1	Non-Safety 480 V Motor Control Center	LC-1		N		
MCC-2	Non-Safety 480 V Motor Control Center	LC-2		Y		
MCC-A1	Train A 480 V Motor Control Center	LC-A		Y		
MCC-B1	Train B 480 V Motor Control Center	LC-B		N		
BC-1	Non-Safety Swing Battery Charger	MCC-1 MCC-2		N		
BC-A	Train A Battery Charger	MCC-A1		N		
BC-B	Train B Battery Charger	MCC-B1		N		
BAT-1	Non-Safety Battery	N/A		N		
BAT-A	Train A Battery	N/A		Y		
BAT-B	Train B Battery	N/A		Y		
DC BUS-1	Non-Safety 125 VDC Bus	BC-1 BAT-1		N		

TABLE 4: DISPOSTION OF COMPONENTS IN PRA AND APPENDIX R (USE TABLES 1-3 AND FIGURES 1-3)						
Equipment ID	**Equipment Description**	**Power Supply**	**In PRA Model? (Y or N)**	**In Appendix R? (Y or N)**	**Add to Fire PRA Equipment List? (Y or N)**	**Comments**
DC BUS-A	Train A 125 VDC Bus	BC-A BAT-A		Y		
DC BUS-B	Train B 125 VDC Bus	BC-B BAT-B		Y		
INV-A	Train A Inverter	DC BUS-A		Y		
INV-B	Train B Inverter	DC BUS-B		Y		
VITAL-A	Train A 120 VAC Vital Bus	INV-A		Y		
VITAL-B	Train B 120 VAC Vital Bus	INV-B		Y		
PNL-A	Train A 125 VDC Panel	DC BUS-A		Y		
PNL-B	Train B 125 VDC Panel	DC BUS-B		Y		

Step 3: Identify Fire-Induced Initiating Events Based on Equipment Affected

Will need to examine each fire compartment / analysis unit and determine based on the equipment and cables located there, which of the initiators (from Step 1 of Task 2) can be caused by a fire in that compartment / analysis unit. If any new initiators are identified, include in the Fire PRA. The Fire PRA will then include fires mapped to initiating events in the model. Each compartment / analysis unit should have a disposition with regard to the initiating event(s) that occur as a result of a fire in each location (even if "none"). Hold discussion with instructor.

Step 4: Identify Equipment with Potential Spurious Actuations that May Challenge the Mitigating Capability to be Credited

Considered spurious equipment operations	Description	PRA System or Function Possibly Affected	Comments/Disposition
MOV-16	AFW test line isolation valve		
MOV-17	AFW test line isolation valve		
MOV-19	AFW test line isolation valve		
MOV-3	Cont. sump recirc. valve		
MOV-4	Cont. sump recirc. valve		
AOV-2	Letdown isolation valve		
RHR	RHR pump		

Step 5: Identify Additional Mitigating, Instrumentation, and Diagnostic Equipment Important to Human Response

Instrumentation required to perform human actions	Description	Potentially Affected Human Failure Event in PRA model	Comments/Disposition
LI-1	RWST level		
LI-2	RWST level		
LI-3	Cont. sump level		
LI-4	Cont. sump level		
TI-1	Letdown heat exchanger outlet temp		
PT-1	RCS pressure		
A-1	AFW motor high temp		

Step 6: Include Potentially High Consequence Related Equipment

Equipment or combinations of equipment that can cause high consequence event	Description of high consequence event	Comments/Disposition

Step 7: Assemble Fire PRA Equipment List

Table 1: Fire PRA Equipment List Information (For Instructors)

Equipment ID	Equipment Description	Equipment Type	Location	Power Supply	PRA Event Identifier	PRA Event Description	Normal Position/ Status	Desired Position/ Status	Failed Electrical Position	Failed Air Position
HPI-A[1]	High pressure safety injection pump A	Pump	Aux Bldg. El. 0 Ft	SWGR-A	HPIA_FTS	HPIA fails to start				
					HPIA_FTR	HPIA fails to run				
HPI-B	High pressure safety injection pump B	Pump	Aux Bldg. El. 0 Ft	SWGR-B	HPIB_FTS	HPIB fails to start				
					HPIB_FTR	HPIB fails to run				
AFW-A	Motor driven AFW pump A	Pump	Turbine Bldg. El. 0 Ft	SWGR-A	AFWA-FTS	AFWA fails to start				
AFW-A	Motor driven AFW pump A	Pump	Turbine Bldg. El. 0 Ft	Turbine Bldg. El. 0 Ft	AFWA-FTR	AFWA fails to run				
AFW-B	Steam driven AFW pump B	Pump	Turbine Bldg. El. 0 Ft	N/A	AFWB-FTS	AFWB fails to start				
AFW-B	Steam driven AFW pump B	Pump	Turbine Bldg. El. 0 Ft	N/A	AFWB-FTR	AFWB fails to run				
AFW-C	Motor driven AFW pump C	Pump	Turbine Bldg. El. 0 Ft	SWGR-2	AFWC-FTS	AFWC fails to start				
AFW-C	Motor driven AFW pump C	Pump	Turbine Bldg. El. 0 Ft	SWGR-2	AFWC-FTR	AFWC fails to run				
RCP	Reactor coolant pump	Pump	Containment	SWGR-1	RCP1-FTT	RCP 1 fails to trip				
COMP-1	Instrument air compressor	Compressor	Turbine Bldg. El. 0 Ft	LC-1	IA-COMP1_FTS	Instrument air compressor fails to start				

Equipment ID	Equipment Description	Equipment Type	Location	Power Supply	PRA Event Identifier	PRA Event Description	Normal Position/ Status	Desired Position/ Status	Failed Electrical Position	Failed Air Position
COMP-1	Instrument air compressor	Compressor	Turbine Bldg. El. 0 Ft	LC-1	IA-COMP1_FTR	Instrument air compressor fails to run				
AOV-1[2] (SOV-1)	Power operated relief valve	AOV	Containment	VITAL-A	AOV-1_TO	PORV AOV-1 transfers open				
					AOV-1_FTO	PORV AOV-1 fails to open				
AOV-2[3] (SOV-2)	Letdown isolation valve	AOV	Aux Bldg. El. 0 Ft	DC BUS-B	AOV-2_FTC	AOV-2 fails to close				
AOV-3[4] (SOV-3)	Charging pump injection valve	AOV	Aux Bldg. El. 0 Ft	DC BUS-B	AOV-3_FTC	AOV-3 FAILS TO CLOSE				
MOV-1	HPI discharge valve	MOV	Aux Bldg. El. 0 Ft	MCC-A1	MOV-1_FTO	MOV-1 FAILS TO OPEN				
MOV-2[5]	VCT isolation valve	MOV	Aux Bldg. El. 0 Ft	MCC-B1	MOV-2_FTC	MOV-2 fails to close				
MOV-3[6]	Cont. sump recirc valve	MOV	Aux Bldg. El. -20 Ft	MCC-A1	MOV-3_FTO	MOV-3 fails to open				
					MOV-3_TO	MOV-3 TRANSFERS OPEN				
MOV-4	Cont. sump recirc valve	MOV	Aux Bldg. El. -20 Ft	MCC-B1	MOV-4_FTO	MOV-4 fails to open				
					MOV-4_TO	MOV-4 TRANSFERS OPEN				
MOV-5	RWST isolation valve	MOV	Aux Bldg. El. 0 Ft	MCC-A1	MOV-5_FTO	MOV-5 fails to open				
MOV-6	RWST isolation valve	MOV	Aux Bldg. El. 0 Ft	MCC-B1	MOV-6_FTO	MOV-6 fails to open				
MOV-7[7]	RHR inboard suction valve	MOV	Containment	MCC-A1	MOV-7_TO	MOV-7 TRANSFERS OPEN				
MOV-8	RHR outboard suction valve	MOV	Aux Bldg. El. -20 Ft	MCC-B1	MOV-8_TO	MOV-8 TRANSFERS OPEN				

Equipment ID	Equipment Description	Equipment Type	Location	Power Supply	PRA Event Identifier	PRA Event Description	Normal Position/ Status	Desired Position/ Status	Failed Electrical Position	Failed Air Position
MOV-9	HPI discharge valve	MOV	Aux Bldg. El. 0 Ft	MCC-B1	MOV-9_FTO	MOV-9 FAILS TO OPEN				
MOV-10	AFW pump A discharge valve	MOV	Turbine Bldg. El. 0 Ft	MCC-A1	MOV-10_FTO	MOV-10 fails to open				
MOV-11	AFW pump B discharge valve	MOV	Turbine Bldg. El. 0 F	DC BUS-B	MOV-11_FTO	MOV-11 fails to open				
MOV-13	PORV block valve	MOV	Containment	MCC-A1	MOV-13_FTC	MOV-13 fails to close				
MOV-14	AFW pump B turbine steam line isolation valve	MOV	Turbine Bldg. El. 0 Ft	DC BUS-B	MOV-14_FTO	MOV-14 FAILS TO OPEN				
MOV-15	AFW pump B steam inlet throttle valve	MOV	Turbine Bldg. El. 0 Ft	DC BUS-B	MOV-15_FTO	MOV-15 FAILS TO OPEN				
MOV-18	AFW pump C discharge valve	MOV	Turbine Bldg. El. 0 Ft	MCC-2	MOV-18_FTO	MOV-18 fails to open				
LI-1[8]	RWST level	Instrument	Yard	VITAL-A	LI-1_FL	RWST Level indication fails low				
					LI-1_FH	RWST Level indication fails high				
LI-2	RWST level	Instrument	Yard	VITAL-B	LI-2_FL	RWST Level indication fails low				
					LI-2_FH	RWST Level indication fails high				
LI-3	Cont. sump level	Instrument	Containment	VITAL-A	LI-3_FH	Cont sump Level indication fails high				
LI-4	Cont. sump level	Instrument	Containment	VITAL-B	LI-4_FH	Cont sump Level indication fails high				
TI-1[9]	Letdown heat exchanger outlet temp	Instrument	Aux Bldg. El. 0 Ft	VITAL-A	TI-1_FL	Letdown temperature indication fails low				
PT-1[10]	RCS pressure	Instrument	Containment	VITAL-B	PI-1_FH	RCS pressure indication fails high				

Equipment ID	Equipment Description	Equipment Type	Location	Power Supply	PRA Event Identifier	PRA Event Description	Normal Position/ Status	Desired Position/ Status	Failed Electrical Position	Failed Air Position
A-1	AFW motor high temperature	Annunciator	SWG Access Room	VITAL-A	ANN-1_FH	AFW motor high temperature annunciator spuriously indicates high				
SWGR-A[11]	Train A 4160 V switchgear	Switchgear	Switchgear Room A	SUT-1 DC BUS-A	PNL-A EPS-4VBUSAF-1	4KV BUS A FAULT				
				EDG-A DC BUS-A	PNL-A EPS-4VBUSAF-2	4KV BUS A FAULT				
SWGR-B	Train B 4160 V switchgear	Switchgear	Switchgear Room B	SUT-1 DC BUS-B	PNL-B EPS-4VBUSBF-1	4KV BUS A FAULT				
				EDG-B DC BUS-B	PNL-B EPS-4VBUSBF-2	4KV BUS A FAULT				
SWGR-1	Non-safety 4160 V switchgear	Switchgear	Turbine Bldg. El. 0ft	UAT-1 SUT-1	EPS-4VBUS1F	4KV BUS 1 FAULT				
SWGR-2	Non-safety 4160 V switchgear	Switchgear	Turbine Bldg. El. 0ft	UAT-1 SUT-1	EPS-4VBUS2F	4KV BUS 2 FAULT				
SUT-1	Startup transformer	Transformer	Yard	OSP	SUTF	FAILURE OF START-UP TRANSFORMER (SUT)				
EDG-A	Train A emergency diesel generator	Diesel Generator	DG Bldg.	DC BUS-A	EPS-DGAF	FAILURE OF DIESEL GENERATOR A				
EDG-B	Train B emergency diesel generator	Diesel Generator	DG Bldg.	DC BUS-B	EPS-DGBF	FAILURE OF DIESEL GENERATOR B				
LC-1	Non-safety 480 V load center	Load Center	Turbine Bldg. El. 0 ft	SST-1	EPS-480VLC1F	480V LOAD CENTER 1 FAULT				
LC-2	Non-safety 480 V load center	Load Center	Turbine Bldg. El. 0 ft	SST-2	EPS-480VLC2F	480V LOAD CENTER 2 FAULT				

Equipment ID	Equipment Description	Equipment Type	Location	Power Supply	PRA Event Identifier	PRA Event Description	Normal Position/ Status	Desired Position/ Status	Failed Electrical Position	Failed Air Position
LC-A	Train A 480 V load center	Load Center	Switchgear Room A	SST-A PNL-A	EPS-480VLCAF	480V LOAD CENTER A FAULT				
LC-B	Train B 480 V load center	Load Center	Switchgear Room B	SST-B PNL-B	EPS-480VLCBF	480V LOAD CENTER B FAULT				
SST-1	Non-safety station service transformer	Transformer	Turbine Bldg. El. 0 F	SWGR-1	EPS-480VLC1XTF	480V LOAD CENTER 1 TRANSFORME R FAILS				
SST-2	Non-safety station service transformer	Transformer	Turbine Bldg. El. 0 F	SWGR-2	EPS-480VLC2XTF	480V LOAD CENTER 2 TRANSFORME R FAILS				
SST-A	Train A station service transformer	Transformer	Switchgear Room A	SWGR-A	EPS-480VLCAXTF	480V LOAD CENTER A TRANSFORME R FAILS				
SST-B	Train B station service transformer	Transformer	Switchgear Room B	SWGR-B	EPS-480VLCBXTF	480V LOAD CENTER B TRANSFORME R FAILS				
MCC-1	Non-safety 480 V motor control center	Motor Control Center	Turbine Bldg. El. 0 Ft	LC-1	EPS-480VMCC1F	480V MCC 1 FAULT				
MCC-2	Non-safety 480 V motor control center	Motor Control Center	Turbine Bldg. El. 0 Ft	LC-2	EPS-480VMCC2F	480V MCC 2 FAULT				
MCC-A1	Train A 480 V motor control center	Motor Control Center	SWG Access Room	LC-A	EPS-480VMCCA1F	480V MCC A1 FAULT				
MCC-B1	Train B 480 V motor control center	Motor Control Center	SWG Access Room	LC-B	EPS-480VMCCB1F	480V MCC B1 FAULT				
ATS-1	Automatic transfer switch	ATS	SWG Access Room	MCC-1 MCC-2	EPS-ATS1F	AUTOMATIC TRANSFER SWITCH ATS-1 FAILS				
BC-1	Non-safety swing battery charger	Battery Charger	Turbine Bldg. El. 0 Ft	ATS-1	EPS-BC1F	FAILURE OF BATTERY CHARGER 1				
BC-A	Train A battery charger	Battery Charger	Switchgear Room A	MCC-A1	EPS-BCAF	FAILURE OF BATTERY CHARGER A				

Equipment ID	Equipment Description	Equipment Type	Location	Power Supply	PRA Event Identifier	PRA Event Description	Normal Position/ Status	Desired Position/ Status	Failed Electrical Position	Failed Air Position
BC-B	Train B battery charger	Battery Charger	Switchgear Room B	MCC-B1	EPS-BCBF	FAILURE OF BATTERY CHARGER B				
BAT-1	Non-safety battery	Battery	Turbine Bldg. El. 0 Ft	N/A	EPS-SB	FAILURE OF STATION BATTERY				
BAT-A	Train A battery	Battery	Battery Room A	N/A	EPS-BATA	FAILURE OF BATTERY A				
BAT-B	Train B battery	Battery	Battery Room B	N/A	EPS-BATB	FAILURE OF BATTERY B				
DC BUS-1	Non-safety 125 VDC bus	DC Bus	Turbine Bldg. El. 0 Ft	BC-1 BAT-1	EPS-125VNSDCBUS F	FAULT ON 125V NON-SAFETY DC BUS				
DC BUS-A	Train A 125 VDC bus	DC Bus	Switchgear Room A	BC-A BAT-A	EPS-125VDCBUSAF	FAULT ON 125V DC BUS A				
DC BUS-B	Train B 125 VDC bus	DC Bus	Switchgear Room B	BC-B BAT-B	EPS-125VDCBUSBF	FAULT ON 125V DC BUS B				
PNL-A	Train A 125 VDC panel	Panel board	Switchgear Room A	DC BUS-A	EPS-125VDCPNLAF	FAULT ON 125V DC PANEL A				
PNL-B	Train B 125 VDC panel	Panel board	Switchgear Room B	DC BUS-B	EPS-125VDCPNLBF	FAULT ON 125V DC PANEL A				
INV-A	Train A inverter	Inverter	Switchgear Room A	DC BUS-A	EPS-120VBUSAINVF	FAILURE OF 120V BUS A INVERTER				
INV-B	Train B inverter	Inverter	Switchgear Room B	DC BUS-B	EPS-120VBUSAINVF	FAILURE OF 120V BUS B INVERTER				
VITAL-A	Train A 120 VAC vital bus	120VAC Bus	SWG Access Room	INV-A	EPS-120VBUSAF	120V BUS A FAULT				
VITAL-B	Train B 120 VAC vital bus	120VAC Bus	SWG Access Room	INV-B	EPS-120VBUSBF	120V BUS A FAULT				

Notes:

Legend

Appendix R	
Components/failures added to PRA for Fire PRA Model	

[1] HPI pumps A & B are in Appendix R for normal charging function; not for HPI.

[2] Closed to prevent LOCA /Open for feed and bleed. Appendix R has valve only to ensure remains closed.

[3] AOV-2 in Appendix R only for normal letdown function.

[4] AOV-3 in Appendix R only for normal charging function.

[5] MOV-2 in Appendix R only for normal suction to charging.

[6] MOV-3 and MOV-4 need to be closed for when using RWST water supply for HPI / Open for recirculation mode of injection. MOVs 5 & 6 are correspondingly open for RWST use and closed for recirc.

[7] Valve electrically blocked closed. Control power fuses are supposed to be removed. MOV-7 & 8 in Appendix R for both normal isolation and shutdown cooling functions.

[8] If RWST level indication fails high the operator will fail to establish recirculation. If the RWST level fails low and containment sump level fails high, the operator will establish suction to dry sump and fail the HPI the pumps due to insufficient suction. Need to resolve failure mode.

[9] If letdown temperature indication fails low, the operator will fail to isolate the letdown line on loss of CCW. This will cause HPI pumps to cavitate due to high temperature in the suction line.

[10] If RCS pressure instrument fails high, the low pressure signal to initiate emergency safeguards actuation during a lire-induced LOCA will not be initiated

[11] For SWGR-A or SWGR-B, only one basic event is used in the model. However, the circuit analysis impact to the switchgear is a function of the power supply

Session 2: Fire Induced Risk Model Development

Slide 1

EPRI/NRC-RES FIRE PRA METHODOLOGY

Task 5 - Fire-Induced Risk Model Development

Joint RES/EPRI Fire PRA Course
September and November 2008
Bethesda, MD

A Collaboration of U.S. NRC Office of Nuclear Regulatory Research (RES) & Electric Power Research Institute (EPRI)

Notes:

Slide 2

Fire PRA Risk Model
Scope

- Task 5: Fire-Induced Risk Model Development
  - Constructing the PRA model

Fire PRA Workshop, Bethesda MD, 2008
Task 5 - Fire-Induced Risk Model Development
Slide 2
A Collaboration of U.S. NRC Office of Nuclear Regulatory Research (RES) & Electric Power Research Institute (EPRI)

Notes:

Slide 3

Notes:

Fire PRA Risk Model
General Comment/Observation

- Task 5 does not represent any changes from past practice, but what is modeled is largely based on Task 2 with HRA input from Task 12
- Bottom line – just "tweaking" your Internal Events PRA is probably NOT sufficient

Fire PRA Workshop, Bethesda MD, 2008
Task 5 - Fire-Induced Risk Model Development
Slide 3
A Collaboration of U.S. NRC Office of Nuclear Regulatory Research (RES) & Electric Power Research Institute (EPRI)

Slide 4

Notes:

Task 5: Fire Risk Model Development
General Objectives

Purpose: Configure the Internal Events PRA to provide fire risk metrics of interest (primarily CDF and LERF).

- Based on standard state-of-the-art PRA practices
- Intended to be applicable for any PRA methodology or software
- Allows user to quantify CDF and LERF, or conditional metrics CCDP and CLERP
- *Conceptually, nothing "new" here – need to "build the PRA model" reflecting fire induced initiators, equipment and failure modes, and human actions of interest*

Fire PRA Workshop, Bethesda MD, 2008
Task 5 - Fire-Induced Risk Model Development
Slide 4
A Collaboration of U.S. NRC Office of Nuclear Regulatory Research (RES) & Electric Power Research Institute (EPRI)

Slide 5

Notes:

Task 5: Fire Risk Model Development
Inputs/Outputs

Task inputs and outputs:

- Inputs from other tasks: [Note: inclusion of spatial information requires cable locations from Task 3]
  - Sequence considerations, initiating event considerations, and components from Task 2 (Fire PRA Component Selection),
  - Unscreened fire compartments from Task 4 (Qualitative Screening),
  - HRA events from Task 12 (Post-Fire HRA)
- Output to Task 7 (Quantitative Screening) which will further modify the model development
- Can always iterate back to refine aspects of the model

Fire PRA Workshop, Bethesda MD, 2008
Task 5 - Fire-Induced Risk Model Development
Slide 5
A Collaboration of U.S. NRC Office of Nuclear Regulatory Research (RES) & Electric Power Research Institute (EPRI)

Slide 6

Notes:

Task 5: Fire Risk Model Development
Steps in Procedure

Two major steps:

- Step 1: Develop CDF/CCDP model
- Step 2: Develop LERF/CLERP model

Fire PRA Workshop, Bethesda MD, 2008
Task 5 - Fire-Induced Risk Model Development
Slide 6
A Collaboration of U.S. NRC Office of Nuclear Regulatory Research (RES) & Electric Power Research Institute (EPRI)

Slide 7

Notes:

Task 5: Fire Risk Model Development
Steps in Procedure/Details

Step 1 (2): Develop CDF/CCDP (LERF/CLERP) models

Step 1.1 (2.1): Select fire-induced initiators and sequences and incorporate into the model

- Each fire-induced initiator is mapped to an internal events initiator that mimics the effect on the plant of the fire initiator
- Internal events sequences form bulk of sequences for Fire PRA, but a search for new sequences should be made (see Task 2). Some new sequences may require new logic to be added to the PRA model

Fire PRA Workshop, Bethesda MD, 2008
Task 5 - Fire-Induced Risk Model Development
Slide 7
A Collaboration of U.S. NRC Office of Nuclear Regulatory Research (RES) & Electric Power Research Institute (EPRI)

Slide 8

Notes:

Task 5: Fire Risk Model Development
Steps in Procedure/Details

Step 1.1 (2.1) - continued

- Plants that use fire emergency procedures (FEPs) may need special models to address unique fire-related actions (e.g., pre-defined fire response actions and MCR abandonment).
- Some human actions may induce new sequences not covered in Internal Events PRA and can "fail" components
  - Example: SISBO, or partial SISBO

Fire PRA Workshop, Bethesda MD, 2008
Task 5 - Fire-Induced Risk Model Development
Slide 8
A Collaboration of U.S. NRC Office of Nuclear Regulatory Research (RES) & Electric Power Research Institute (EPRI)

Slide 9

Notes:

Task 5: Fire Risk Model Development
Steps in Procedure/Details

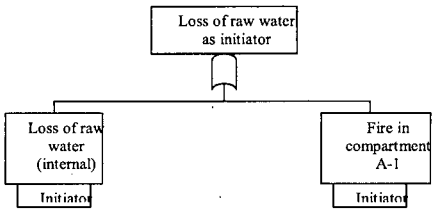

Example of new logic with a fire-induced loss of raw water initiating event

Slide 10

Notes:

Task 5: Fire Risk Model Development
Steps in Procedure/Details

Step 1.2 (2.2): Incorporate fire-induced equipment failures

- Fire PRA database documents list of potentially failed equipment for each fire compartment
- Basic events for fire-induced spurious operations are defined and added to the PRA model
- Inclusion of spatial information requires equipment and cable locations
  - May be an integral part of model logic, or handled with manipulation of a cable location database, etc.

Slide 11

Task 5: Fire Risk Model Development
Steps in Procedure/Details

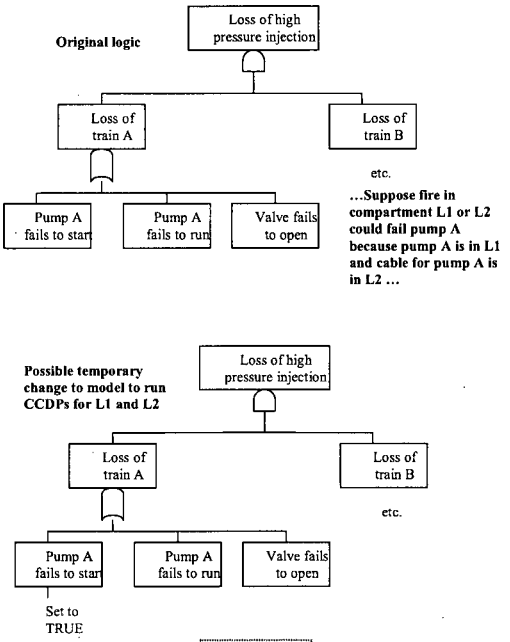

Fire PRA Workshop, Bethesda MD, 2008
Task 5 - Fire-Induced Risk Model Development

Slide 11

A Collaboration of U.S. NRC Office of Nuclear Regulatory Research (RES) & Electric Power Research Institute (EPRI)

Notes:

Slide 12

Task 5: Fire Risk Model Development

Steps in Procedure/Details

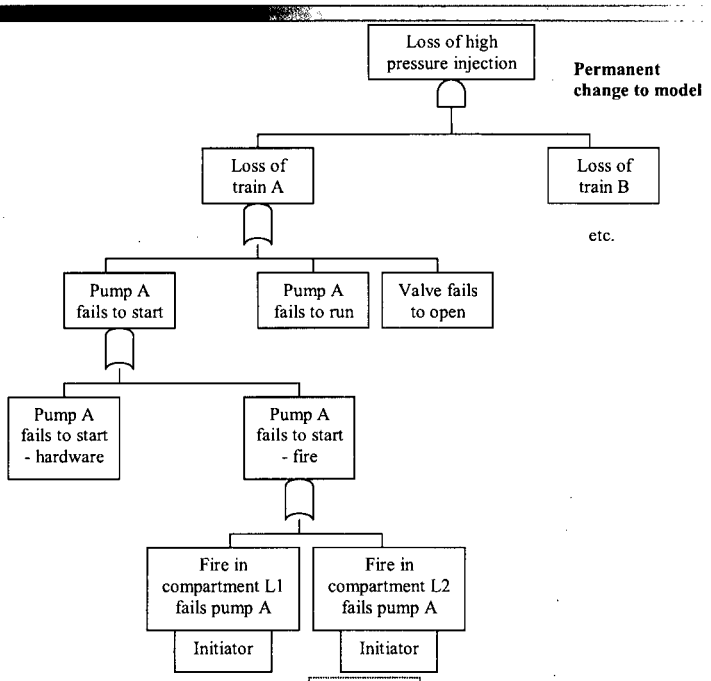

Notes:

Slide 13

Notes:

Task 5: Fire Risk Model Development
Steps in Procedure/Details

Step 1.3 (2.3): Incorporate fire-induced human failures

- New fire-specific HFEs may have to be added to the model to address actions specified in FEPs [Note: all HFEs will be set at screening values at first, using Task 12 guidance]
- Successful operator actions may temporarily disable ("fail") components

Slide 14

Task 5: Fire Risk Model Development
Steps in Procedure/Details

Suppose a proceduralized manual action carried out for fires in compartments AA & BB defeats Pump A operation by de-energizing the pump (opening its breaker drawer)...

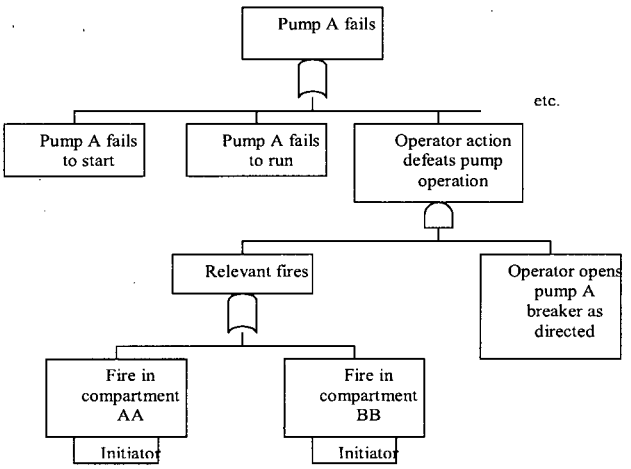

Notes:

Slide 15

Sample Problem Exercise for Task 5

- Distribute blank handout for Task 5, Steps 1 and 2
- Distribute completed handout for Task 5, Steps 1 and 2
- Question and Answer Session

Notes:

Session 3: Qualitative/Quantitative Screening

Slide 1

EPRI | ELECTRIC POWER RESEARCH INSTITUTE

EPRI/NRC-RES FIRE PRA METHODOLOGY

Task 4 - Qualitative Screening
Task 7 - Quantitative Screening

Joint RES/EPRI Fire PRA Workshop
September and November 2008
Bethesda, MD

A Collaboration of U.S. NRC Office of Nuclear Regulatory Research (RES) & Electric Power Research Institute (EPRI)

Notes:

Slide 2

Qualitative / Quantitative Screening
Scope

- Task 4: Qualitative Screening
  - First chance to identify very low risk compartments
- Task 7: Quantitative Screening
  - Running the Fire PRA model to iteratively screen / maintain modeled sequences at different levels of detail

Fire PRA Workshop, Bethesda MD, 2008
Task 4 & 7 – Qualitative/Quantitative Screening

Slide 2

A Collaboration of U.S. NRC Office of Nuclear Regulatory Research (RES) & Electric Power Research Institute (EPRI)

Notes:

Slide 3

Notes:

Task 4: Qualitative Screening
Objectives and Scope

- The objective of Task 4 is to identify those fire compartments that can be shown to have a negligible risk contribution <u>without</u> quantitative analysis
  - This is where you exclude the office building inside the protected area
- Task 4 *only* considers fire compartments as individual contributors
  - Multi-compartment scenarios are covered in Task 11(b)
  - Compartments that screen out qualitatively need to be re-considered as potential Exposing Compartments in the multi-compartment analysis (but not as the Exposed Compartment)

Fire PRA Workshop, Bethesda MD, 2008
Task 4 & 7 – Qualitative/Quantitative Screening
Slide 3
A Collaboration of U.S. NRC Office of Nuclear Regulatory Research (RES) & Electric Power Research Institute (EPRI)

Slide 4

Notes:

Task 4: Qualitative Screening
Required Input and Task Output

- To complete Task 4 you need the following input:
  - List of fire compartments from Task 1
  - List of Fire PRA equipment from Task 2 including location mapping results
  - List of Fire PRA cables from Task 3 including location mapping results
- Task Output: A list of fire compartments that will be screened out (no further analysis) based on qualitative criteria
  - Unscreened fire compartments are used in Task 6 and further screened in Task 7

Fire PRA Workshop, Bethesda MD, 2008
Task 4 & 7 – Qualitative/Quantitative Screening
Slide 4
A Collaboration of U.S. NRC Office of Nuclear Regulatory Research (RES) & Electric Power Research Institute (EPRI)

Slide 5

Notes:

Task 4: Qualitative Screening
A Note....

- Qualitative Screening is OPTIONAL!
  - You may choose to retain any number of potentially low-risk fire compartments (from one to all) without formally conducting the Qualitative Screening Assessment for the compartment
    - However, to eliminate a compartment, you must exercise the screening process for the compartment
  - *Example 1*: Many areas will never pass qualitative screening, so simply keep them
  - *Example 2*: If you are dealing with an application with limited scope (e.g. NFPA 805 Change Evaluation) a formalized Qualitative Screening may be pointless

Fire PRA Workshop, Bethesda MD, 2008
Task 4 & 7 – Qualitative/Quantitative Screening
Slide 5
A Collaboration of U.S. NRC Office of Nuclear Regulatory Research (RES) & Electric Power Research Institute (EPRI)

Slide 6

Notes:

Task 4: Qualitative Screening
Screening Criteria

- A Fire Compartment may be screened out** if:
  - No Fire PRA equipment or cables are located in the compartment, and
  - No fire that remains confined to the compartment could lead to:
    - An automatic plant trip, or
    - A manual trip *as specified by plant procedures*, or
    - A *near-term* manual shutdown due to violation of plant Technical Specifications*

    *In the case of tech spec shutdown, consideration of the time window is appropriate
      - No firm time window is specified in the procedure – rule of thumb: consistent with the time window of the fire itself
      - Analyst must choose and justify the maximum time window considered

(**Note: screened compartments are re-considered as fire source compartments in the multi-compartment analysis - Task 11c)

Fire PRA Workshop, Bethesda MD, 2008
Task 4 & 7 – Qualitative/Quantitative Screening
Slide 6
A Collaboration of U.S. NRC Office of Nuclear Regulatory Research (RES) & Electric Power Research Institute (EPRI)

Slide 7

Notes:

Task 7: Quantitative Screening
General Objectives

Purpose: allow (i.e., optional) screening of fire compartments and scenarios based on contribution to fire risk. Screening is primarily compartment-based (Tasks 7A/B). Scenario-based screening (Tasks 7C/D) is a further refinement (optional).

- Screening criteria not the same as acceptance criteria for regulatory applications (e.g., R.G. 1.174)
- Screening does not mean "throw away" – screened compartments/scenarios will be quantified (recognized to be conservative) and carried through to Task 14 as a measure of the residual fire risk

Fire PRA Workshop, Bethesda MD, 2008
Task 4 & 7 – Qualitative/Quantitative Screening
Slide 7
A Collaboration of U.S. NRC Office of Nuclear Regulatory Research (RES) & Electric Power Research Institute (EPRI)

Slide 8

Notes:

Task 7: Quantitative Screening
Inputs/Outputs

- Inputs from other tasks for compartment-based screening (7A/B):
  - Fire ignition frequencies from Task 6,
  - Task 5 (Fire-Induced Risk Model),
  - Task 12 (Post-Fire HRA Screening), and
  - Task 8 (Scoping Fire Modeling) (7B only)

Fire PRA Workshop, Bethesda MD, 2008
Task 4 & 7 – Qualitative/Quantitative Screening
Slide 8
A Collaboration of U.S. NRC Office of Nuclear Regulatory Research (RES) & Electric Power Research Institute (EPRI)

Slide 9

Notes:

Task 7: Quantitative Screening
***Inputs/Outputs** (cont'd)*

- Inputs from other tasks for scenario-based screening (7C/D) include inputs listed above plus:
  - Task 9 (Detailed Circuit Failure Analysis) and/or
  - Task 11 (Detailed Fire Modeling) and/or
  - Task 12 (Post-Fire HRA Detailed), and
  - Task 10 (Circuit Failure Mode Likelihood Analysis) (7D only)

Fire PRA Workshop, Bethesda MD, 2008
Task 4 & 7 – Qualitative/Quantitative Screening
Slide 9
A Collaboration of U.S. NRC Office of Nuclear Regulatory Research (RES) & Electric Power Research Institute (EPRI)

Slide 10

Notes:

Task 7: Quantitative Screening
***Inputs/Outputs** (cont'd)*

- Outputs to other tasks:
  - Unscreened fire compartments from Task 7A go to Task 8 (Scoping Fire Modeling),
  - Unscreened fire compartments from Task 7B go to Task 9 (Detailed Circuit Failure Analysis) and/or Task 11 (Detailed Fire Modeling) and/or Task 12 (detailed Post-Fire HRA),
  - Unscreened fire scenarios from Task 7C/D go to Task 14 (Fire Risk Quantification) for best-estimate risk calculation

Fire PRA Workshop, Bethesda MD, 2008
Task 4 & 7 – Qualitative/Quantitative Screening
Slide 10
A Collaboration of U.S. NRC Office of Nuclear Regulatory Research (RES) & Electric Power Research Institute (EPRI)

Slide 11

Task 7: Quantitative Screening
Overview of the Process

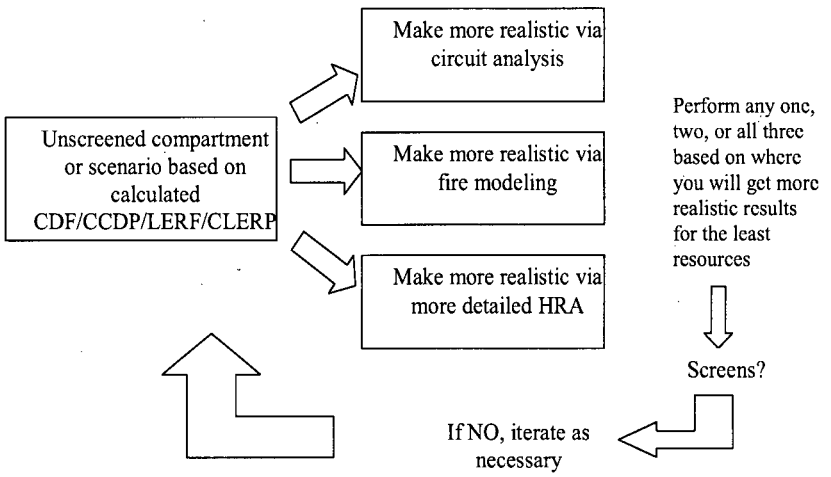

Fire PRA Workshop, Bethesda MD, 2008
Task 4 & 7 – Qualitative/Quantitative Screening

Slide 11

A Collaboration of U.S. NRC Office of Nuclear Regulatory Research (RES) & Electric Power Research Institute (EPRI)

Notes:

Slide 12

Notes:

Task 7: Quantitative Screening
Steps in Procedure

Three major steps in the procedure:

- Step 1: Quantify CDF/CCDP model
- Step 2: Quantify LERF/CLERP model
- Step 3: Quantitative screening

Fire PRA Workshop, Bethesda MD, 2008
Task 4 & 7 – Qualitative/Quantitative Screening
Slide 12
A Collaboration of U.S. NRC Office of Nuclear Regulatory Research (RES) & Electric Power Research Institute (EPRI)

Slide 13

Notes:

Task 7: Quantitative Screening
Steps in Procedure/Details

Step 1: Quantify CDF/CCDP models.

- Step 1.1: Quantify CCDP model
  - Fire-induced initiators are set to TRUE (1.0) for each fire compartment, CCDP calculated for each compartment
  - This step can be bypassed, if desired, by using fire frequencies in the model directly and calculating CDF

Fire PRA Workshop, Bethesda MD, 2008
Task 4 & 7 – Qualitative/Quantitative Screening
Slide 13
A Collaboration of U.S. NRC Office of Nuclear Regulatory Research (RES) & Electric Power Research Institute (EPRI)

Slide 14

Notes:

Task 7: Quantitative Screening
Steps in Procedure/Details

Step 1: Quantify CDF/CCDP models.

- Step 1.2: Quantify CDF
  - Compartment fire-induced initiator frequencies combined with compartment CCDPs from Step 1.1 to obtain compartment CDFs
- Step 1.3: Quantify ICDP (optional)
  - ICDP includes unavailability of equipment removed from service routinely
  - Recommend this be done if will use PRA for configuration management

Slide 15

Notes:

Task 7: Quantitative Screening
Steps in Procedure/Details

Step 2: Develop LERF/CLERP models.

- Exactly analogous to Step 1 but now for LERF and CLERP

Slide 16

Notes:

Task 7: Quantitative Screening
Screening Criteria for Single Fire Compartment

Step 3: Quantitative screening, Table 7.2 from NUREG/CR-6850

Quantification Type	CDF and LERF Compartment Screening Criteria	ICDP and ILERP Compartment Screening Criteria (Optional)
Fire Compartment CDF	CDF < 1.0E-7/yr	
Fire Compartment CDF With Intact Trains/Systems Unavailable		ICDP < 1.0E-7
Fire Compartment LERF	LERF < 1.0E-8/yr	
Fire Compartment LERF With Intact Trains/Systems Unavailable		ILERP < 1.0E-8

Slide 17

Notes:

Task 7: Quantitative Screening
Screening Criteria For All Screened Compartments

Step 3: Quantitative screening, Table 7.3 from NUREG/CR-6850

Quantification Type	Screening Criteria
Sum of CDF for all screened-out fire compartments	< 0.1 * (internal event average CDF)
Sum of LERF for all screened-out fire compartments	< 0.1 * (internal event average LERF)
Sum of ICDP for all screened-out fire compartments	< 1.0E-6
Sum of ILERP for all screened-out fire compartments	< 1.0E-7

Slide 18

Notes:

Task 7: Quantitative Screening
Bases for Values

Bases for quantitative screening criteria provided in App. D to NUREG/CR-6850

- Premise is that most CDFs are ~1.0E-5/yr
- Increase in CDF less than 1.0E-6/yr is defined as very small increase in R.G. 1.174
- Sum of CDF from screened-out compartments therefore limited to 10% of total CDF
- Individual compartment limit set at 1.0E-7/yr, or 1% of total CDF

Fire PRA Workshop, Bethesda MD, 2008
Task 4 & 7 – Qualitative/Quantitative Screening
Slide 18
A Collaboration of U.S. NRC Office of Nuclear Regulatory Research (RES) & Electric Power Research Institute (EPRI)

Slide 19

Notes:

Task 7: Quantitative Screening
***Bases for Values** (cont'd)*

- Basis for LERF values same as for CDF, but factor of 10 lower
- ICDP screening criterion of 1.0E-6 based on temporary change risk criterion in EPRI PSA Applications Guide, EPRI-TR-105396
- Similar basis for ICLERP criterion of 1.0E-7

Fire PRA Workshop, Bethesda MD, 2008
Task 4 & 7 – Qualitative/Quantitative Screening
Slide 19
A Collaboration of U.S. NRC Office of Nuclear Regulatory Research (RES) & Electric Power Research Institute (EPRI)

Slide 20

Notes:

Task 7: Quantitative Screening
A word of caution...

- Note that the quantitative screening criteria are a point of ongoing discussion, e.g.:
  - Should fire criteria be based on internal events totals or based on fire totals?
- ASME/ANS standard provide guidance regarding quantitative screening
  - Anticipate that changes may be forthcoming

Session 4: Screening Post-Fire HRA

Slide 1

Notes:

ELECTRIC POWER RESEARCH INSTITUTE

Science Applications International Corporation

EPRI/NRC-RES FIRE PRA METHODOLOGY

Task 12a - Screening Post-Fire HRA

Joint RES/EPRI Fire PRA Workshop
2007
Palo Alto, CA

A Collaboration of U.S. NRC Office of Nuclear Regulatory Research (RES) & Electric Power Research Institute (EPRI)

Slide 2

Notes:

HRA Screening
Scope

- Task 12a: Post-fire HRA (screening)
  - Identifying applicable post-fire human failure events and establishing screening values used during the running of the Fire PRA model

Fire PRA Workshop, 2007, Palo Alto, CA
Task 12a - Screening Post-Fire HRA

Slide 2

A Collaboration of U.S. NRC Office of Nuclear Regulatory Research (RES) & Electric Power Research Institute (EPRI)

Slide 3

Notes:

Task 12a: Post-Fire HRA (Screening)
General Objectives

Purpose: identify reasonable and feasible human actions and resulting HFEs to include in Fire PRA, and assign screening HEPs to simplify the model and focus analysis resources appropriately.

- Addresses screening values based on:
  - Whether a prior analyzed Internal Events HFE vs. a new fire-related HFE
  - Potential effects of fire scenario for which Internal Events HFE is applied
  - Timing considerations for new fire-related HFEs
- Accounts for fire-scenario-induced changes in assumptions, model structure, and performance shaping factors
- Addresses need to use procedures (e.g., FEPs) beyond those modeled in the Internal Events PRA
- Does not address pre-initiator HFEs that are handled within the data used in Tasks 6, 8, and 11

Fire PRA Workshop, 2007, Palo Alto, CA
Task 12a - Screening Post-Fire HRA
Slide 3
A Collaboration of U.S. NRC Office of Nuclear Regulatory Research (RES) & Electric Power Research Institute (EPRI)

Slide 4

Notes:

Task 12a: Post-Fire HRA (Screening)
Inputs/Outputs

- Inputs from other tasks:
  - Mitigating equipment and diagnostic indications from Task 2 (Fire PRA Component Selection),
  - Human actions already in PRA (because of internal events modeling) from Task 5 (Fire-Induced Risk Model),
  - Information may be used for identifying equipment failures, spurious operations and indications from Tasks 3 (Fire PRA Cable Selection), 9 (Detailed Circuit Failure Analysis), 10 (Circuit Failure Mode Likelihood Analysis), 8 (Scoping Fire Modeling), and 11 (Detailed Fire Modeling) as available, so as to determine proper screening criteria to be used

Fire PRA Workshop, 2007, Palo Alto, CA
Task 12a - Screening Post-Fire HRA
Slide 4
A Collaboration of U.S. NRC Office of Nuclear Regulatory Research (RES) & Electric Power Research Institute (EPRI)

Slide 5

Notes:

Task 12a: Post-Fire HRA (Screening)
Inputs/Outputs (continued)

- Outputs to other tasks:
  - May identify human actions implying other equipment and indications to be added in Task 2 (Fire PRA Component Selection) and thus modeling additions in Task 5 (Fire-Induced Risk Model)
  - Provides screening HEPs for Task 7 (Quantitative Screening)

Fire PRA Workshop, 2007, Palo Alto, CA
Task 12a - Screening Post-Fire HRA
Slide 5
A Collaboration of U.S. NRC Office of Nuclear Regulatory Research (RES) & Electric Power Research Institute (EPRI)

Slide 6

Notes:

Task 12a: Post-Fire HRA (Screening)
Steps In Procedure

Two major steps:

- Step 1: Modify and add HFEs to the model
- Step 2: Assign quantitative screening HEPs

Fire PRA Workshop, 2007, Palo Alto, CA
Task 12a - Screening Post-Fire HRA
Slide 6
A Collaboration of U.S. NRC Office of Nuclear Regulatory Research (RES) & Electric Power Research Institute (EPRI)

Slide 7

Notes:

Task 12a: Post-Fire HRA (Screening)
Steps In Procedure/Details

Step 1: Modify and add HFEs to the model.

- Step 1.1: Review existing Internal Events HFEs and modify as necessary
  - Many existing HFEs will remain as is except for screening value
  - Some existing HFEs may need to change such as due to the use of different procedures, possible fire environmental effects, or different scenario timing due to fire
- Step 1.2: Add new fire-unique HFEs
  - Primarily from fire-specific procedures
  - Actions taken in response to spurious (erroneous) indications

Fire PRA Workshop, 2007, Palo Alto, CA
Task 12a - Screening Post-Fire HRA

Slide 7

A Collaboration of U.S. NRC Office of Nuclear Regulatory Research (RES) & Electric Power Research Institute (EPRI)

Slide 8

Notes:

Task 12a: Post-Fire HRA (Screening)
Steps In Procedure/Details

The following are important elements of the identification process:

- Expected steps taken in response to fires in specific compartments
- Comparison of fire response actions to EOP actions
- Consider fire-specific training, if information is available and relevant
- Role of each crew member during fire scenario
- Fire-specific informal rules that are part of crew knowledge

Fire PRA Workshop, 2007, Palo Alto, CA
Task 12a - Screening Post-Fire HRA

Slide 8

A Collaboration of U.S. NRC Office of Nuclear Regulatory Research (RES) & Electric Power Research Institute (EPRI)

Slide 9

Notes:

Task 12a: Post-Fire HRA (Screening)
Steps In Procedure/Details

Step 2: Assign quantitative screening HEPs (on a fire scenario specific basis)

- Four sets of screening criteria :
  - Set 1: multiply internal events HEP by 10 to account for effects of potential fire brigade interaction and other minor increased workload/distraction issues. Examine dependencies across scenario.
  - Set 2 (spurious events could have impact but to only one critical safety-related train/division): increase internal events HEP to 0.1, or 10 times original value, whichever is greater. Examine dependencies across scenario.
  - Set 3: applies generally to new HFEs but also to existing HFEs not meeting Set 1 or 2. Use 1.0 if action has to be performed within one hour of fire initiation. Use 0.1 otherwise.
  - Set 4: applies to new HFEs associated with MCR abandonment. Use screening value of 1.0.

Fire PRA Workshop, 2007, Palo Alto, CA
Task 12a - Screening Post-Fire HRA
Slide 9
A Collaboration of U.S. NRC Office of Nuclear Regulatory Research (RES) & Electric Power Research Institute (EPRI)

Slide 10

Notes:

Task 12a: Post-Fire HRA (Screening)
Bases for Screening Values

Values have no direct empirical bases. Bases are:

- Experience with range of screening values used and accepted in HRA
- Experience in quantifying HEPs for events in nuclear power plant HRAs
- Experience applying range of HRA methods and values associated with those methods
- Experience performing HRA for Fire PRAs, including pilots
- Peer comments
- Not so low so as to miss potential dependencies among HFEs

Fire PRA Workshop, 2007, Palo Alto, CA
Task 12a - Screening Post-Fire HRA
Slide 10
A Collaboration of U.S. NRC Office of Nuclear Regulatory Research (RES) & Electric Power Research Institute (EPRI)

Session 5: Post-Fire HRA Detailed Analysis

Slide 1

Notes:

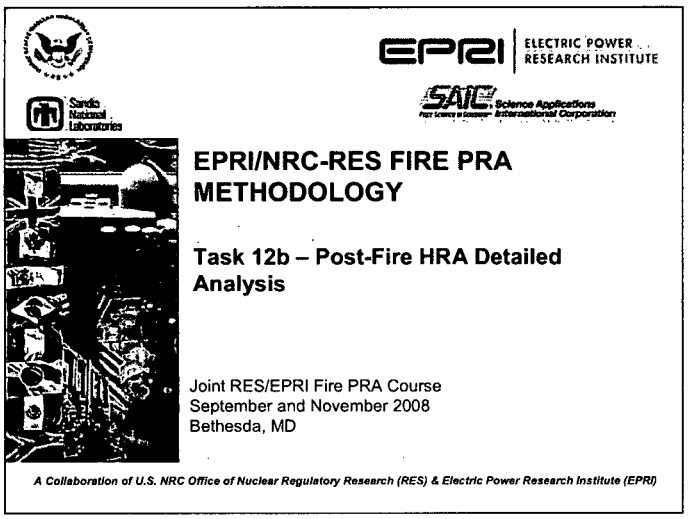

Slide 2

Notes:

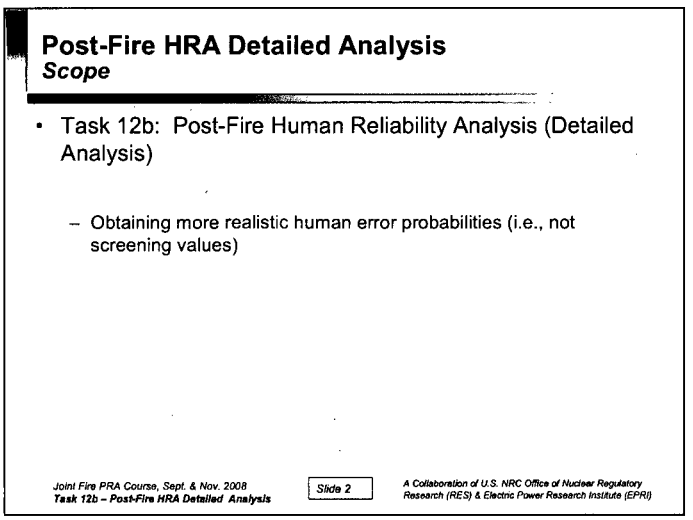

Slide 3

Notes:

Task 12b: Post-Fire HRA Detailed Analysis
General Objectives

Purpose: assign best-estimate HEPs to allow more realistic estimate of fire risk.

- Current procedures do not specify an HRA method to use
  - There are too many methods analysts might use (THERP, ASEP, CBDT...) and each is unique in what it treats and how to determine HEPs
  - Hence, procedure outlines what should be addressed but not how to specifically incorporate into existing HRA methods because there are too many of them
- Addresses fire-scenario-induced changes in assumptions, model structure, and performance shaping factors
- Addresses need to use procedures (e.g., FEPs) beyond those modeled in the Internal Events PRA

Joint Fire PRA Course, Sept. & Nov. 2008
Task 12b – Post-Fire HRA Detailed Analysis
Slide 3
A Collaboration of U.S. NRC Office of Nuclear Regulatory Research (RES) & Electric Power Research Institute (EPRI)

Slide 4

Notes:

Task 12b: Post-Fire HRA Detailed Analysis
Inputs/Outputs

Task inputs and outputs:

- Inputs from other tasks: feedback from Task 7 (Quantitative Screening) identifying HFEs needing detailed analysis
- Outputs to other tasks: best-estimate HEPs for Task 14 (Fire Risk Quantification)

Joint Fire PRA Course, Sept. & Nov. 2008
Task 12b – Post-Fire HRA Detailed Analysis
Slide 4
A Collaboration of U.S. NRC Office of Nuclear Regulatory Research (RES) & Electric Power Research Institute (EPRI)

Slide 5

Notes:

Task 12b: Post-Fire HRA Detailed Analysis
ASME PRA Standard & Possible Team Addition

- Overall approach is not new
  - Continue to follow the basic HRA approach addressed in ASME/ANS PRA Standard (RA-S-200X) including both Part 3 (fire) and cited requirements from Part 2 (internal events)
  - Recommends individual with experience in human behavior during fires (firefighter trainers, etc.) be involved in quantification IF useful for safe shutdown considerations (e.g., for local actions)
  - But need to recognize the difference between operator safe shutdown actions generally in the MCR vs. fire-fighting actions in the vicinity of the fire

Slide 6

Notes:

Task 12b: Post-Fire HRA Detailed Analysis
PSFs and Fire Effects to Consider

Guidance focuses on identification of fire-relevant performance shaping factors (PSFs) and potential interactions among the PSFs (fire conditions could make PSFs different than those for internal events):

- Available staffing resources
  - Fire situation may need more staffing than responding to an internal event
  - "Nominal" staffing for internal event could be less than adequate for fire
- Applicability and suitability of training/experience
  - Extent of familiarity/training may be less for fire than for internal events for both in-MCR and local actions

more…

Slide 7

Notes:

Task 12b: Post-Fire HRA Detailed Analysis
PSFs and Fire Effects to Consider

- Suitability of relevant procedures and administrative controls
  - Fires may require multiple procedures be used at the same time (e.g., EOPs and Fire Procedures) that may be more burdensome and together take more time to implement
  - There may be less detailed or no procedures available for some actions (e.g., local action steps are not spelled out but require more skill-of-the-craft or memory)
- Availability and clarity of instrumentation
  - Possibility of spurious or failed indications more likely for fires than for internal events

Joint Fire PRA Course, Sept. & Nov. 2008
Task 12b – Post-Fire HRA Detailed Analysis
Slide 7
A Collaboration of U.S. NRC Office of Nuclear Regulatory Research (RES) & Electric Power Research Institute (EPRI)

Slide 8

Notes:

Task 12b: Post-Fire HRA Detailed Analysis
PSFs and Fire Effects to Consider

- Time available and needed to complete action, including impact of concurrent and competing activities
  - Timing of scenario could be different from comparable internal events scenario due to spurious events and introduction of new/different procedures and actions
  - Actions themselves may have different execution times (e.g., have to disable before reposition, may require more sequencing of actions, etc.)
- Environment in which action is to be performed
  - Fires can introduce new considerations (smoke, heat, chemicals, toxic gases…)
- Accessibility and operability of equipment
  - Fires can eliminate or delay the ability to take actions due to accessibility or damage considerations

Joint Fire PRA Course, Sept. & Nov. 2008
Task 12b – Post-Fire HRA Detailed Analysis
Slide 8
A Collaboration of U.S. NRC Office of Nuclear Regulatory Research (RES) & Electric Power Research Institute (EPRI)

Slide 9

Notes:

Task 12b: Post-Fire HRA Detailed Analysis
PSFs and Fire Effects to Consider

- Need for special tools and clothing
  - Fires may increase these requirements (e.g., breathing gear, protective clothing, ladders, keys…)
  - Need to ensure access to these, and consider potential increase in execution of similar actions than that estimated for internal events
- Communications
  - Could be greater demand and potential need for different form (e.g., runners)
- Team/crew dynamics and crew characteristics
  - Potential for different roles/responsibilities, less frequent or different timing of plant status checks (could affect recoveries), etc.
- Special fitness needs
  - Ensure no new fitness needs required (especially for local actions)

Joint Fire PRA Course, Sept. & Nov. 2008
Task 12b – Post-Fire HRA Detailed Analysis
Slide 9
A Collaboration of U.S. NRC Office of Nuclear Regulatory Research (RES) & Electric Power Research Institute (EPRI)

Slide 10

Notes:

Task 12b: Post-Fire HRA Detailed Analysis
MCR Abandonment

Should consider as part of the PSF evaluations:

- Procedural/training approach and explicitness/clarity of criteria for abandoning MCR
  - Could be confusion about need to evacuate MCR
  - Impact of crew reluctance to abandon MCR
  - Timeliness of decision and problems associated with delays in abandoning MCR
  - Inappropriate abandonment of MCR (e.g., premature or less viable option)

Joint Fire PRA Course, Sept. & Nov. 2008
Task 12b – Post-Fire HRA Detailed Analysis
Slide 10
A Collaboration of U.S. NRC Office of Nuclear Regulatory Research (RES) & Electric Power Research Institute (EPRI)

Slide 11

Notes:

Task 12b: Post-Fire HRA Detailed Analysis
***MCR Abandonment** (cont'd)*

- Effects of crew no longer having access to complete MCR indications and the information they provide
- Number and complexity of actions to shift control and carry out subsequent activities
- Number of different locations to be visited
- Extent to which multiple actions need to be coordinated or sequentially performed
- Ability to communicate between different locations
- Need to wear breathing apparatus or special clothing
- Adequacy of human-machine interface at remote shutdown and local panels

Joint Fire PRA Course, Sept. & Nov. 2008
Task 12b – Post-Fire HRA Detailed Analysis
Slide 11
A Collaboration of U.S. NRC Office of Nuclear Regulatory Research (RES) & Electric Power Research Institute (EPRI)

Slide 12

Notes:

Task 12b: Post-Fire HRA Detailed Analysis
Cases Where Little or No Credit Should be Allowed

- Tasks needing significant interaction/communication between individuals wearing SCBAs unless can be justified as not a problem
- Fire causes numerous spurious actuations (or stops) of equipment including instruments
- Actions performed in fire areas or requiring travel through fire areas
- Actions requiring use of damaged equipment
- Actions without procedural direction or training, lacking necessary tools, or with inadequate time available

Joint Fire PRA Course, Sept. & Nov. 2008
Task 12b – Post-Fire HRA Detailed Analysis
Slide 12
A Collaboration of U.S. NRC Office of Nuclear Regulatory Research (RES) & Electric Power Research Institute (EPRI)

Slide 13

Notes:

Task 12b: Post-Fire HRA Detailed Analysis
Documentation

Product of this task is a calculation package, which should contain (per the ASME/ANS PRA Std. Part 3):

- All human actions and HFEs considered, including descriptions in context of fire scenarios
- Quantification approach and method/tools used
- HEP results and bases for HEP calculations, including dependencies, PSFs, and uncertainty
- Important sensitivities

Session 6: Fire Risk Quantification

Slide 1

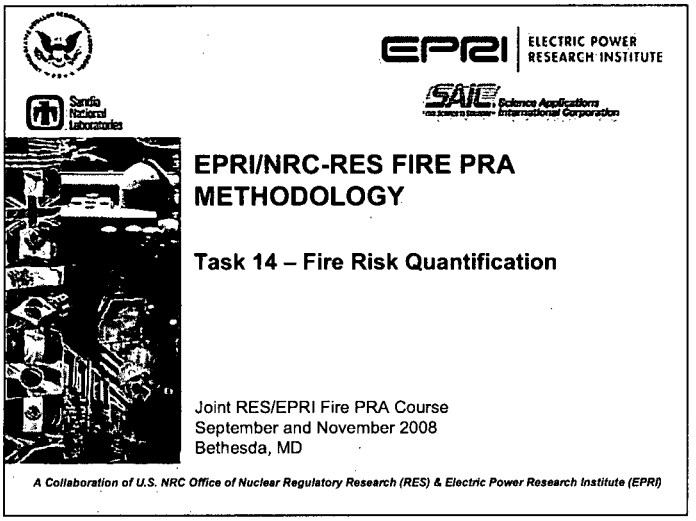

Notes:

Slide 2

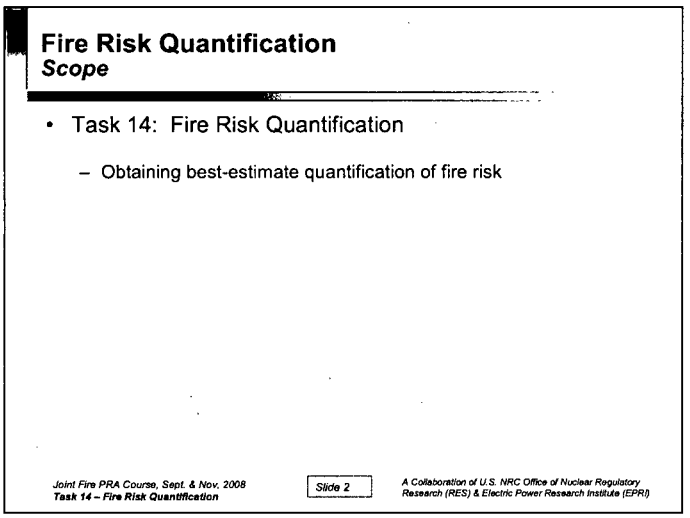

Notes:

Slide 3

Notes:

Task 14: Fire Risk Quantification
General Objectives

Purpose: perform final (best-estimate) quantification of fire risk

- Calculate CDF/LERF as the primary risk metrics
- Include uncertainty analysis / sensitivity results (see Task 15)
- Identify significant contributors to fire risk
- Carry along insights from Task 13 to documentation but this is not an explicit part of "quantifying" the Fire PRA model
- Carry along residual risk from screened compartments and scenarios (Task 7); both (final fire risk and residual risk) are documented in Task 16 to provide total risk perspective

Joint Fire PRA Course, Sept. & Nov. 2008
Task 14 – Fire Risk Quantification
Slide 3
A Collaboration of U.S. NRC Office of Nuclear Regulatory Research (RES) & Electric Power Research Institute (EPRI)

Slide 4

Notes:

Task 14: Fire Risk Quantification
Inputs/Outputs

Task inputs:

- Inputs from other tasks:
  - Task 5 (Fire-Induced Risk Model) as modified/run thru Task 7 (Quantitative Screening),
  - Task 10 (Circuit Failure Mode Likelihood Analysis),
  - Task 11 (Detailed Fire Modeling), and
  - Task 12 (Post-Fire HRA Detailed Analysis)

Joint Fire PRA Course, Sept. & Nov. 2008
Task 14 – Fire Risk Quantification
Slide 4
A Collaboration of U.S. NRC Office of Nuclear Regulatory Research (RES) & Electric Power Research Institute (EPRI)

Slide 5

Notes:

Task 14: Fire Risk Quantification
Inputs/Outputs

- Output is the quantified fire risk results including the uncertainty and sensitivity analyses directed by Task 15 (Uncertainty and Sensitivity Analysis), all of which is documented per Task 16 (Fire PRA Documentation)

Slide 6

Notes:

Task 14: Fire Risk Quantification
Steps in Procedure

Four major steps in the procedure*:

- Step 1: Quantify CDF
- Step 2: Quantify LERF
- Step 3: Perform uncertainty analyses including propagation of uncertainty bounds as directed under step 4 of Task 15
- Step 4: Perform sensitivity analyses as directed under step 4 of Task 15

* In each case, significant contributors are also identified

Slide 7

Notes:

Task 14: Fire Risk Quantification
Quantification Process

Characteristics of the quantification process:

- Procedure is "general"; i.e., not tied to a specific method (event tree with boundary conditions, fault tree linking...)
- Can calculate CDF/LERF directly by explicitly including fire scenario frequencies or first calculate CCDP/CLERP and then combine with fire scenario frequencies
- Quantification is to be done in conformance with relevant ASME PRA Standard (RA-S-200X) requirements and supporting requirements
  - Fire section (Part 3) references internal events section (Part 2) for most aspect of risk quantification

Joint Fire PRA Course, Sept. & Nov. 2008
Task 14 – Fire Risk Quantification

Slide 7

A Collaboration of U.S. NRC Office of Nuclear Regulatory Research (RES) & Electric Power Research Institute (EPRI)

Session 7: Uncertainty and Sensitivity Analysis

Slide 1

Notes:

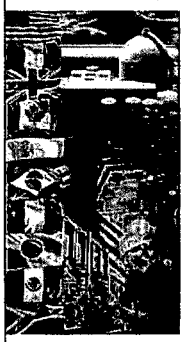

EPRI ELECTRIC POWER RESEARCH INSTITUTE

EPRI/NRC-RES FIRE PRA METHODOLOGY

Task 15 - Uncertainty and Sensitivity Analysis

Joint RES/EPRI Fire PRA Workshop
September and November, 2008
Bethesda, MD

A Collaboration of U.S. NRC Office of Nuclear Regulatory Research (RES) & Electric Power Research Institute (EPRI)

Slide 2

Notes:

Task 15:Uncertainty and Sensitivity Analysis
Purpose

Purpose: Provide a process for identifying and treating uncertainties in the Fire PRA, and identifying sensitivity analysis cases

- Many of the inputs to the Fire PRA are uncertain
- Important to identify sources of uncertainty and assumptions that have the strongest influence on the final results
- Fire risk can be quantified without explicit quantification of uncertainties, but the risk results cannot be considered as complete without it
- Sensitivity analysis is an important tool in uncertainty assessment

Fire PRA Workshop, Bethesda MD, 2008
Task 15 - Uncertainty and Sensitivity Analysis
Slide 2
A Collaboration of U.S. NRC Office of Nuclear Regulatory Research (RES) & Electric Power Research Institute (EPRI)

Slide 3

Notes:

Task 15:Uncertainty and Sensitivity Analysis
Scope

Scope of Task 15 includes:

- Background information on uncertainty
- Classification of the types of uncertainty
- A general approach on treating uncertainties in Fire PRA

Fire PRA Workshop, Bethesda MD, 2008
Task 15 - Uncertainty and Sensitivity Analysis
Slide 3
A Collaboration of U.S. NRC Office of Nuclear Regulatory Research (RES) & Electric Power Research Institute (EPRI)

Slide 4

Notes:

Task 15:Uncertainty and Sensitivity Analysis
Types of Uncertainty

- Distinction between aleatory and epistemic uncertainty:
  - "Aleatory" - from the Latin alea (dice), of or relating to random or stochastic phenomena. Also called "random uncertainty or variability."
    - Reflected in the Fire PRA models as a set of interacting random processes involving a fire-induced transient, response of mitigating systems, and corresponding human actions
  - "Epistemic" - of, relating to, or involving knowledge; cognitive. [From Greek episteme, knowledge]. Also called "state-of-knowledge uncertainty."
    - Reflects uncertainty in the parameter values and models (including completeness) used in the Fire PRA – addressed in this Task

Fire PRA Workshop, Bethesda MD, 2008
Task 15 - Uncertainty and Sensitivity Analysis
Slide 4
A Collaboration of U.S. NRC Office of Nuclear Regulatory Research (RES) & Electric Power Research Institute (EPRI)

Slide 5

Notes:

Task 15:Uncertainty and Sensitivity Analysis
Inputs and Outputs

- Inputs from other Tasks:
  - Identification of sources of epistemic uncertainties from Tasks 1 through 13 worthy of uncertainty/sensitivity analysis (i.e., key uncertainties)
  - Quantification results from Task 14 including risk drivers used to help determine key uncertainties
  - Proposed approach for addressing each of the identified uncertainties including sensitivity analyses
- Outputs to other Tasks:
  - Sensitivity analyses performed in Task 14
  - Results of uncertainty and sensitivity analysis are reflected in documentation of Fire PRA (Task 16)

Fire PRA Workshop, Bethesda MD, 2008
Task 15 - Uncertainty and Sensitivity Analysis
Slide 5
A Collaboration of U.S. NRC Office of Nuclear Regulatory Research (RES) & Electric Power Research Institute (EPRI)

Slide 6

Notes:

Task 15:Uncertainty and Sensitivity Analysis
General Procedure

Addresses a process to be followed rather than a pre-defined list of epistemic uncertainties and sensitivity analyses, since these could be plant specific

•Step 1: Identify uncertainties associated with each task

•Step 2: Develop strategies for addressing uncertainties

•Step 3: Review uncertainties to decide which uncertainties to address and how

•Step 4: Perform uncertainty and sensitivity analyses

•Step 5: Include results of uncertainty and sensitivity analyses in Fire PRA documentation

Fire PRA Workshop, Bethesda MD, 2008
Task 15 - Uncertainty and Sensitivity Analysis
Slide 6
A Collaboration of U.S. NRC Office of Nuclear Regulatory Research (RES) & Electric Power Research Institute (EPRI)

Slide 7

Notes:

Task 15:Uncertainty and Sensitivity Analysis
Steps in Procedure/Details

See Appendix U to NUREG/CR-6850 for background on uncertainty analysis. See Appendix V for details for each task.

Step 1: Identify epistemic uncertainties for each task

- Initial assessment of uncertainties to be treated is provided in Appendix V to NUREG/CR-6850 (but consider plant specific analysis for other uncertainties such as specific assumptions)
- From a practical standpoint, characterize uncertainties as modeling and data uncertainties
- Outcome is a list of issues, by task, leading to potentially important uncertainties (both modeling and data uncertainty)

Slide 8

Notes:

Task 15:Uncertainty and Sensitivity Analysis
Steps in Procedure/Details

Step 2: Develop strategies for addressing uncertainties

- Strategy can range from no action to explicit quantitative modeling
- Each task analyst is expected to provide suggested strategies
- Possible strategies include propagation of data uncertainties, developing multiple models, addressing uncertainties qualitatively, quality review process, and basis for excluding some uncertainties
- Basis for strategy should be noted and may include importance of uncertainty on overall results, effects on future applications, resource and schedule constraints

Slide 9

Notes:

Task 15:Uncertainty and Sensitivity Analysis
Steps in Procedure/Details

Step 3: Review uncertainties to decide which uncertainties to address and how

- Review carried out by team of analysts familiar with issues, perhaps meeting more than once
- Review has multiple objectives:
  - Identify uncertainties that will not be addressed, and reasons why
  - Identify uncertainties to be addressed, and strategies to be used
  - Identify uncertainties to be grouped into single assessment
  - Identify issues to be treated via sensitivity analysis
  - Instructions to task analysts to perform the analyses

Slide 10

Notes:

Task 15:Uncertainty and Sensitivity Analysis
Sensitivity Analysis

- Sensitivity analysis can provide a perspective that cannot be obtained from a review of significant risk contributors.
  - Each task analyst can provide a list of parameters that had the strongest influence in their part of the analysis
  - Experiment with modified parameter to demonstrate impact on the final risk results
  - Modeling uncertainties can be demonstrated through sensitivity analysis
  - Sensitivities should be performed for individual uncertainties as well as for appropriate logical groups of uncertainties

Slide 11

Notes:

Task 15:Uncertainty and Sensitivity Analysis
Steps in Procedure/Details

Step 4: Perform uncertainty and sensitivity analyses

- Uncertainty analyses may involve:
  - Quantitative sampling of parameter distributions
  - Manipulation of models to perform sensitivity analyses
  - Qualitative evaluation of uncertainty
- Following items should be made explicit:
  - Uncertainties being addressed
  - Strategy being followed
  - Specific methods, references, computer programs, etc. being used (to allow traceability)
  - Results of analyses, including conclusions relative to overall results of Fire PRA
  - Potential impacts on anticipated applications of results

Fire PRA Workshop, Bethesda MD, 2008
Task 15 - Uncertainty and Sensitivity Analysis
Slide 11
A Collaboration of U.S. NRC Office of Nuclear Regulatory Research (RES) & Electric Power Research Institute (EPRI)

Slide 12

Notes:

Task 15:Uncertainty and Sensitivity Analysis
Steps in Procedure/Details

Step 5: Include results in PRA documentation

- Adequate documentation of uncertainties and sensitivities is as important as documentation of baseline results
- Adequate documentation leads to improved decision-making
- Documentation covered more fully under Task 16

Fire PRA Workshop, Bethesda MD, 2008
Task 15 - Uncertainty and Sensitivity Analysis
Slide 12
A Collaboration of U.S. NRC Office of Nuclear Regulatory Research (RES) & Electric Power Research Institute (EPRI)

Slide 13

Notes:

Task 15:Uncertainty and Sensitivity Analysis *Expectations*

- Minimum set of uncertainties expected to have a formal treatment:
  - Fire PRA model structure itself, representing the uncertainty with regard to how fires could result in core damage and/or large early release outcomes (Tasks 5/7)
  - Uncertainty in each significant fire ignition frequency (Task 6)
  - Uncertainty in each significant circuit failure mode probability (Task 10)
  - Uncertainty in each significant target failure probability (Task 11)
    - Heat release rate
    - Suppression failure model and failure rate
    - Position of the target set vs. ignition sources
  - Uncertainty in each significant human error probability (Task 12)
  - Uncertainty in each sequence core damage and large early release frequency based on the above inputs as well as uncertainties for other significant equipment failures/modes (Task 14)

Fire PRA Workshop, Bethesda MD, 2008
Task 15 - Uncertainty and Sensitivity Analysis
Slide 13
A Collaboration of U.S. NRC Office of Nuclear Regulatory Research (RES) & Electric Power Research Institute (EPRI)

Slide 14

Notes:

Task 15:Uncertainty and Sensitivity Analysis *Expectations*

- Other uncertainties may be relevant to address
- Sensitivity analyses should be performed where important to show robustness in results (i.e., demonstrate where results are / are not sensitive to reasonable changes in the inputs)
- While not really a source of uncertainty, per se, technical quality issues and recommended reviews are also addressed

Fire PRA Workshop, Bethesda MD, 2008
Task 15 - Uncertainty and Sensitivity Analysis
Slide 14
A Collaboration of U.S. NRC Office of Nuclear Regulatory Research (RES) & Electric Power Research Institute (EPRI)

Appendices

Appendix A: Questions Asked in Module 1 Sessions

NRC Disclaimer: Appendix A is intended solely for use as part of a training tool. No portion represents NRC Conclusions or Regulatory Positions, and should not be interpreted as such.

Session 1a: Fire PRA Component Selection

QUESTION

Given that spurious opening is a high-consequence event, would doubles and triples be considered in the PRA?

RESPONSE

The relevant guidance addresses doubles, but provides no numerical upper limit for consideration.

QUESTION

For consideration in the PRA, why aren't small LOCAs considered?

RESPONSE

They are! We're not concerned about pipe-break LOCAs, but we are concerned about any other event, like a spurious opening of the PORV, that can result in the same thing, like a small-break LOCA, or a medium-break LOCA, or a large-break LOCA.

QUESTION

Should we include the auxiliary feedwater pumps' test-line isolation valves in the fire PRA equipment list?

RESPONSE

No. The system description says that they are not a significant diversion of flow.

ASIDE: DUAL FAILURE MODES

Both failure modes of a particular component, like failure to open and spuriously opening, must be considered in the model and potentially each of those failure modes will involve different cables. The circuit analysts will need that information, so when identifying information for the PRA equipment list, identify each failure mode.

QUESTION

Are most components required for the PRA included in the fire PRA?

RESPONSE

In most cases, this is correct, but additional information is needed. In addition, there may be certain situations on which you make a decision that you don't want to include in the fire PRA model.

QUESTION

On the electrical drawings, it says that MOV-7 and -8 are racked out. Are these included anyway because they are high consequence?

RESPONSE

Yes. The circuit analysts will consider the potential for a three-phase smart short, even if the valve is racked out. Include it in the analysis, but you will ultimately determine that the probability of this short is very low.

QUESTION

Could you clarify the meaning of the "normal position" column in table 1 in the fire PRA equipment list?

RESPONSE

"Normal position" here refers to the position of the component prior to failure. For example, HPI-A in the first line of the table initiates from standby, turning off in the event of an electrical failure and on as the desired position.

Session 2: Fire-Induced Risk Model Development

QUESTION

Slide 5: How do you define what LERF means in the context of a PRA?

RESPONSE

It's the same definition that you use in the PRA right now. There's no change in the definition of these risk metrics. What will change is the things that give you core damage and LERF, like the fire damage and impacts, the fire initiators in your model. The intent of 6850 was to make it generic enough that it would work with any type of software package, rather than being designed to focus on any one methodology or software package. The advantage of this approach is that it is flexible, but the downside is that it might be too high-level or generic in some cases. For this reason, we present here a guide on how to get there, but once you get it, you try to incorporate these fire risk models into your plant. You'll have to tailor it into your own packages. Nothing new here, just new fire-induced initiators and failure modes. The human actions will have to be reassessed; in particular, the post-initiator actions that must be taken

after a plant trip. You must account for the fact that there are higher stress conditions and more confusion during a fire. In addition, there might be some new operator actions in the fire emergency procedures that must be assessed for their impacts on core damage. In appendix R, the reason you shut off equipment (thereby risking damage to it) is so that you minimize the risk of spurious equipment functioning. For this reason, you pretty much isolate the off-site power and try to guarantee that you can get power from the diesels.

QUESTION

Slide 7: How do you know which initiating events correspond to which system failure right away? Do you have to look at all possible scenarios and screen from there, or can you immediately only look at certain subsets?

RESPONSE

If it doesn't affect another of your mitigation systems and it's just a reactor trip, most of the time it's going to screen. The fire actually has to be affecting something in your mitigation system for you to get that impact. Take, for example, a seal LOCA in a PWR. You have to lose CCW, thermal barrier cooling, and seal injection. You might think that the fire causes an RCP seal LOCA. When trying to figure out how to do this, you need to remember that this is all one big AND gate, so you're always multiplying by some initiator. What initiator can I use to capture the effect? If I map to a reactor trip and my cables are hooked up to a CCW and a charging pump, I could conceivably capture that effect through cable propagation. I don't need to make a special seal LOCA, initiator or CCWs because I would have captured that effect through propagation through my model. In this example, as in the real situation, you don't want to map every fire zone to every initiator, you want instead to find a set that seem to match the plant response. If you have a fire that causes a LOCA, you want to go under the LOCA tree. If you have something that effectively causes a steam line break, you will want to go under the steam line break tree. This is where you will need to exercise some judgment on where to map the fire initiating events, and sometimes you will have to look at the cable impacts, if you have them.

I want to mention that this task 5 is another iteration one. First shot through, you may or may not have the cables. Although you want them, if you don't have them, you must assume failure of that system. So, by definition, if you don't have the cables, you take a hit on that system. Once you do have the cables, then you can back off that system and the cable impacts will come through the system rather quickly.

QUESTION

I'm still confused: can the core damage frequencies inform the event trees?

RESPONSE

Yes. Here is an example: you come in with some transient initiating event in your event tree. (The event tree is a series of events used to model the steps necessary to core damage.) Then you ask yourself about the RCS integrity. Each one of these branches has a fault tree under it, a number of different ways to arrive at an RCS integrity failure. You're looking for those fire events that can make PORVs go open, cause seal LOCAs, cause vent valves to open, anything that can give you a hole in your system that's equivalent to a small LOCA. The next step is to figure out how to mitigate a break in your coolant system, and this is a simplified model. You can inject water into the system for injection, in order to mitigate the loss of coolant. Let's go

back to the basics: up means it did occur, down means it did not. When you go down on this branch here, it means you have some kind of LOCA on your hands. Success is always up, failure is always down. You then ask yourself, "what do I need to mitigate this LOCA?". But then you put water into the reactor coolant system, and it's coming out of the PORV, but it's now just draining to the bottom of containment. The water in the tank won't last, so this is where the recirculation pumps come into the picture. You first ask yourself whether or not you have water to put in. In this simplistic model, if you don't have the water, that's core damage.

Another option is to go up on the coolant injection branch. Yes, you did have injection. But, remember now, you're running on water out of the tank. Now you have to realign the suction from the sump to get suction from the pump so that you can go into recirculation and maintain core cooling. If you fail recirculation, that's core damage. If you make it through recirculation, you're done.

QUESTION

So where does the CDF come from?

RESPONSE

CDF is the sum of the probabilities of every instance here where you do obtain core damage. You can fail injection and have core damage, or you can fail recirculation and also have core damage.

QUESTION

Slide 9: When you say you're going to map it to the different trees, I guess that there are enough inputs on the different trees that are different, because of the HRAs and other things, that wouldn't you really just copy that event tree structure and have a separate initiator and use that same structure?

RESPONSE

That's one way of doing it. You could have an event tree for each initiating event, but what we've found in these initiating events is that the structure is rather similar. The plant responds in pretty much the same way to different events, it's just about what's being affected underneath. If you have a hole in your system, you will always need injection.

QUESTION

We've got deterministic fire houses, and we've got actions in some zones that require the operator to just start shutting stuff down. Operators hate that. That's where we are, and hopefully 805 will get us out of that. The procedures will take us to where we want to be. When you're building this pump, and you're building in access to the operator,...

RESPONSE

You can either put it in up-front, or you can build a model without those actions, unless you know it will degrade something, and then as you run through the model... Take, for example, an MOV. The procedure might say, "the MOV spuriously opened, send a guy there locally and go close it." Initially, I wouldn't put that operator action in the model, I would just let the fire fail that

MOV. Then what I'll do is add a recovery on that system. I can add a solution and then simulate the operator recovering from that failure, with some number, and then I'll see what the impact of that is. It's an iterative process.

Now, the ones where they actually turn off equipment, like a HPSI pump, can be initially mapped as a failure of that particular pump. I'll then see if there are any associated recoveries. You have to capture the detrimental effect, and in most cases, you can capture them within the framework of the PRA model. There are some cases, however, that are so severe that the structure of the model doesn't work, and you have to build a special response model for the FEPs, which hopefully you won't have to do. An example I gave is an SISBO, or a self-induced station blackout. When they perceive a fire, the first thing they'll do is cut off the off-site power and bring the power from the diesels. All of the unnecessary equipment, except the safe shutdown equipment, will be turned off. It's pretty hard to actually determine this structure, and it will be largely determined by HRA. The necessary human actions are what will bring you into a stable condition. If you have a LOCA on your hands, which hopefully you won't, it might not be the best thing to do. If the off-site power is there, you may wish to consider it. The point here is that there are some situations where the PRA model may not be adequate. You have to see what your FEPs are doing and see whether you can operate within the framework of the existing PRA.

QUESTION

Slide 9: Given a known cause of an event with multiple causes, how do you model the particular initiating event in the fault tree?

RESPONSE

This is your internal event initiator model in here. You have determined that fire in this compartment will give you a loss of all water pumps. In order to model this effect, you have to look at what initiating events are getting you there. One way is to find the loss of water initiating event in your model, embedded somewhere in your fault trees, then make an OR gate, and slap this fire initiating model right underneath of it. So now when you solve that model, a fire in that compartment will have the same impact as a loss of all water.

QUESTION

I'm modeling, over here, the fire initiator. Is this meant to be just one of a number of acceptable ways to do this? In terms of adding an initiator, I'm looking at the raw water initiator and adding under there. One could also go in and look at the unavailability term, and calculate a conditional core damage probability, and multiply by the fire probability term. There are different ways to approach it.

RESPONSE

Yes. If there were more than one fire initiator, they would all be under the OR gate. There are different ways to approach it. This method here gives you a CDF. If I multiplied these two frequencies outside the model, all I want is a CCDP. So instead of putting an initiator under there, I would put something else, like when I calculate a core damage probability for this compartment, I would put some logic element there that would fail that gate. If you fail that gate, it will propagate all up through the front line systems, at which point you will get a core damage probability without considering the probability of the initiator. The initiator has been set to 1. But

then you've put some kind of flag in there to fail that gate to simulate the loss of raw water. So, like I said, there are a couple of ways to do it.

QUESTION

Does the way you approach this affect what capability or category you would be? Is there a preferred method with the NRC for this? (CCDP or CDF)

RESPONSE

Not that I know of, but people have done it both ways. Any way that you can show a core damage probability. The example shows here that if you wanted to integrate these fire initiators into your model for an A4 application, this might be the way you want to go. And when you solve this model, you will get cutsets, or combinations of fire initiators. You will actually see the fire initiator in the solution. Whereas, if you were to do CCDP, you're setting all your initiators to 1.

QUESTION

Slide 14: Shouldn't that operator action be a 1? Otherwise, you're taking credit for a failure.

RESPONSE

Yes, you're right. Usually it is 1. In fact, a lot of times, I don't even add the AND gate, I just consider it passed. I'm just showing how, if you wanted to model it explicitly, and someone could give you a model for that. But usually it's pretty high, because you're counting on the operator to follow standard procedures. It's kind of a weird thing in this fire thing where, if you follow procedures, you degrade your equipment.

Session 3: Qualitative/Quantitative Screening

QUESTION

What is the screening process for internal HRA events?

RESPONSE

We follow a similar screening process for internal events and HRA. Generally, we'll put in a very high failure probability for all the human error events, something like .3, and then we just let it propagate through the initial evaluation model. The combinations that come up through the cut sets, you look at them and you have to evaluate those combinations with regard to the possibility of dependencies between them. Sometimes they may even be related to the same procedural steps: you might have failure to initiate one system and failure to initiate another system, and if they're the same functions its addresses in the same step of the procedure, its really the same human error. That's why, when you do this initially, you put a high screening value in because potentially a lot of these could be deep, highly dependent almost the same event. If you start to put in 10^-2, they disappear and you miss out on important insights, so

that's why we use high screening probabilities and I think its sort of the similar concept here is you need to be very careful in eliminating human error events.

QUESTION

In the KFW example, you're saying that you're applying 7-3 to all of these actions in the control room. Why or what's the thought process on doing that for recovery actions that don't have any interactions with KFW?

RESPONSE

Simply because there exist other performance-shaping factors besides what directly relates to the systems, the crew will be distracted by other things going on. They have a lot of workload to address, so its more then just addressing the aux feedwater system itself, you have to address all the actions that take place.

QUESTION

What do you mean by compartment, is that the same as a room?

RESPONSE

In the fire modeling section of 6850 they define, they have criteria for defining what a fire compartment is. It could correspond to a fire area, it may not. In some people's plants the fire areas are very large and it's just too much to handle in just one shot, so they actually divide these things into smaller divisions, which they call compartments. These are the subdivisions of the plant that were determined in the other task from a fire standpoint, it's a fire criteria to define what the boundaries are, what the criteria is. So from this stand point it's an input to us we say ok that's a compartment, we believe you.

QUESTION

How do you screen HRA events before you know their interaction with hardware?

RESPONSE

When we say screening, I'm getting it below a threshold, but later on I put the HRA in and a lot of those things pop up so I'm not really getting rid of it I'm doing it on step at a time. I'm running the model with normal HRAs to get a feel for what's getting me directly by the fire independent of the HRA. From experience you put them all together, and you don't know if it's the HRA or the hardware. When we first wrote it we said put it all together and see what happens, but in practice, you can't see the forest from the trees. You ask yourself, "is it the HRA that's getting me or is it the hardware?" So what I do in the first step is forget about the HRA for a while and take a look at the hardware impacts because of the fire and then start bringing in the HRA to see what HRAs we have to work on.

Session 6: Fire Risk Quantification

QUESTION

When we started using the PRA tool, it was really to try to come up with the best estimate of risk, but in the last two or three years, especially with the development integrating fire into it, that approach has really changed, and we're going to make conservative assumptions in applied PRA techniques. Why the change from what we had for several years?

RESPONSE

Part of the reason is when we do these applications and these STPs, people ask us the impact of fire or seismic events. So now, from a risk perspective, and while realizing that maybe the technology is not as evolved as what we have in the internal events in the other applications, you have to really the limitations of the model.

QUESTION

How much data do we have to support the fire ignition frequency numbers? Where did we get that data from?

RESPONSE

Well as part of that effort, the fire database was generated, and it included information that came from multiple sources, including some from reportable incidents which the NRC keeps record of. And some instances aren't necessarily recordable, so all the information that could be obtained was obtained with regards to fire incidents and put into a database. And that data essentially was parsed, used to look at the frequencies of fires related to specific components for example the frequency of fires related to transient combustibles. This is covered in the fire task.

QUESTION

Should steps 3-6, the analysis of spurious events, be included in steps 1&2?

RESPONSE

Some are included in the fire safe shutdown analysis, but not all of them. The intent here was to work your way down from a high level. The first step is kind of looking at your PRA at a high level and looking at the initiators and sequencers in your model, asking yourself if they can be evolved in a fire. From a fire perspective, you find out at a high level which trees can be screened out with proper justification, and you're stuck with maybe one or two event trees that you really have to deal with. After understanding and screening the internal events model, you wonder how it can be impacted with fire and its scope. Now you're looking at it from the standpoint of your appendix R and safe shutdown analysis, and there'll be some commonality, but the reason why we do this is because supposedly appendix R has the components for the system that have already been analyzed for circuits. You have cable routing, and you have circuit analysis, so you want to take as much credit as you can for that appendix R when you're able to. So we compare, for example, a safety injection pump and you look like you got a match

there, and some of the circuits match. However, if you look in your PRA model, the automatic actuations model, the appendix R manual operations presume that you don't have the circuitry for automatic actuations. When we do the comparison, when we get down to the component level, you can reflect and go back to your high level thinking and get an idea whether you won't be comparing oranges and apples; you'll know the differences. So we start from a high level, of sequences and event trees, and then compare appendix R and at some point you're going to end up at the component level. You'll have this big database with components. Some components are in appendix R, and some components are in PRA, and by this point you should know why.

QUESTION

What percentage do you add when you do steps 3-6?

RESPONSE

There are some plants that I would say are light on their internal events, so by definition, they are missing a bunch of variables. For the ones that have pretty robust PRA models, it's mostly adding more failure models than components. It's hard to give a number because it varies.

Appendix B:
Sample Exercise Solutions (Module 1, Task 2)

Step 1: Identify Internal Events PRA Sequences to be Included (and those to be excluded) in the Fire PRA Model

INITIATING EVENTS IN THE PRA MODEL					
Initiator	**Average Frequency (per yr)**	**Description**	**Accident Sequence or Event Tree Model**	**Address in Fire PRA Model? (Y or N)**	**Comments**
%T1	7.23E-01	Reactor Trip	Transient Event Tree	Y	
%T2	9.33E-02	Loss of Condenser Vacuum	Transient Event Tree	Y	
%T3	4.13E-01	Turbine trip	Transient Event Tree	Y	
%T4	3.73E-02	Loss of Main Feedwater	Transient Event Tree	Y	
%T5P	4.25E-02	Loss of Offsite Power (Plant-Centered)	Transient Event Tree	Y	
%T5C	1.02E-02	Loss of Off-Site Power (Grid-Related)	Transient Event Tree	N	Grid-related loss of offsite power due to internal fire is highly unlikely
%T5D	6.26E-03	Loss of Off-Site Power (Weather-Induced)	Transient Event Tree	N	Weather-induced loss of offsite power due to internal fire is highly unlikely
%T6	7.35E-03	Steamline/Feed line Break Upstream of Main Steam Isolation valves	Main Steamline Break Event	Y	Fire-induced pipe break is not likely. However, stuck-open SG PORV/atmospheric relief valve could result in uncontrolled

INITIATING EVENTS IN THE PRA MODEL					
Initiator	**Average Frequency (per yr)**	**Description**	**Accident Sequence or Event Tree Model**	**Address in Fire PRA Model? (Y or N)**	**Comments**
		or Downstream of Feedwater Isolation Valves (Includes Stuck-Open Secondary relief valves)	Tree		cooldown.
%T7	5.44E-03	Steamline Break Downstream of Main Steam isolation valves (Includes Stuck-Open Secondary relief valves)	Main Steamline Break Event	Y	Fire-induced pipe break is not likely. However, condenser steam dump valve(s) could result in uncontrolled cooldown.
%T8	2.94E-04	Loss of 4160 V Bus 1	Transient Event Tree	Y	
%T9	2.94E-04	Loss of 4160 V Bus A	Transient Event Tree	Y	
%T10	2.94E-04	Loss of 4160 V Bus B	Transient Event Tree	Y	
%T11	2.94E-04	Loss of 4160 V Bus 2	Transient Event Tree	Y	
%T12	3.00E-03	Loss of 125 VDC Bus A	Transient Event Tree	Y	
%T13	3.00E-03	Loss of 125 VDC Bus B	Transient Event Tree	Y	
%T15	Fault Tree Model %T15-INIT	Loss of CCW System	Transient Event Tree	Y	
%T16	Fault Tree	Loss of Service Water	Transient	Y	

INITIATING EVENTS IN THE PRA MODEL					
Initiator	**Average Frequency (per yr)**	**Description**	**Accident Sequence or Event Tree Model**	**Address in Fire PRA Model? (Y or N)**	**Comments**
	Model %T16-INIT	System	Event Tree		
%T17	Fault Tree Model %T17-INIT	Loss of Instrument Air	Transient Event Tree	Y	
%T21	3.41E-02	Closure of MSIV (1 SG Loop)	Transient Event Tree	Y	
%T22	1.24E-02	Closure of both MSIVs	Transient Event Tree	Y	
%T23	1.78E-01	Partial Load Rejection	Transient Event Tree	Y	
%T24	5.79E-02	Spurious Steam Gen. Isolation Signal	Transient Event Tree	Y	
%T25	7.23E-02	Reactor Trip With PORV Opening/Demand	Transient Event Tree	Y	
%T26	Fault Tree Model %T26-INIT	Loss of Power from120 VAC Buses A & B	Transient Event Tree	Y	
%S	6.8E-03	Small LOCA (pipe breaks and RCP seal LOCA)	Small LOCA Event Tree	See comment	Fire-induced pipe break or passive RCP seal failure is unlikely. However, portion of small LOCA event tree likely needed to treat transient-induced small LOCA from Transient Event Tree such as the pressurizer PORV demanded and stuck-open or RCP seal LOCA via loss of RCP seal cooling.
%M	9.60E-06	Medium LOCA (pipe	Medium	See comment	Fire-induced pipe break is unlikely. For our simplified plant, any transient-induced LOCA

INITIATING EVENTS IN THE PRA MODEL					
Initiator	**Average Frequency (per yr)**	**Description**	**Accident Sequence or Event Tree Model**	**Address in Fire PRA Model? (Y or N)**	**Comments**
		breaks)	LOCA Event Tree		is considered small. If in another plant, a transient-induced medium LOCA could occur based on one or more events (e.g., a single but large size PORV or multiple PORVs spuriously opening), then a portion of the medium LOCA event tree may be needed.
%A	7.77E-05	Large LOCA (pipe breaks)	Large LOCA Event Tree	See comment	Fire-induced pipe break is unlikely. For our simplified plant, any transient-induced LOCA is considered small. If in another plant, a transient-induced large LOCA could occur based on one or more events (e.g., a single but large size PORV or multiple PORVs spuriously opening), then a portion of the large LOCA event tree may be needed.
%R	7.93E-03	Steam Generator Tube Rupture	SGTR Event Tree	N	Fire-induced rupture of SG tubes is highly unlikely.
%I2	2.000E-07	Interfacing Systems LOCA at RCS/RHR Interface (2 MOVs in series)	ISLRHR Sequence (single event model)	Y	Spurious opening of both RHR suction valves could result in ISLOCA. Since power to the inboard valve is racked out, a 3-phase hot short would be required to open that valve. Consideration of 3-phase hot shorts is required for high-consequence lines.
%I3	Fault Tree Model I3QINIT	Interfacing Systems LOCA at RCS/CCW interface (Reactor Coolant Pump Cooler rupture)	ISLCCW Sequence	N	Fire-induced ISLOCA highly unlikely via a passive rupture of the RCP Cooler
%VR	2.70E-07	Reactor Vessel Rupture	Single Event in Master Fault Tree	N	Fire-induced rupture of the reactor vessel is highly unlikely

ACCIDENT SEQUENCE OR EVENT TREE MODELS IN THE PRA

Accident Sequence or Event Tree Model	Description	Additional Details	Address in Fire PRA Model? (Y or N)	Comments
TRA	Transient	Includes transient-induced LOCAs such as stuck-open PORV and RCP seal LOCA	Y	
SLOCA	Small LOCA	Pipe breaks & RCP seal LOCA	See comment	Fire-induced pipe break or passive RCP seal failure is unlikely. However, portion of small LOCA event tree likely needed to treat transient-induced small LOCA from Transient Event Tree such as the pressurizer PORV demanded and stuck-open or RCP seal LOCA via loss of RCP seal cooling.
MLOCA	Medium LOCA	Pipe breaks	See comment	Fire-induced pipe break is unlikely. For our simplified plant, any transient-induced LOCA is considered small. If in another plant, a transient-induced medium LOCA could occur based on one or more events (e.g., a single but large size PORV or multiple PORVs spuriously opening), then a portion of the medium LOCA event tree may be needed.
LLOCA	Large LOCA	Pipe breaks	See comment	Fire-induced pipe break is unlikely. For our simplified plant, any transient-induced LOCA is considered small. If in another plant, a transient-induced large LOCA could occur based on one or more events (e.g., a single but large size PORV or multiple PORVs spuriously opening), then a portion of the large LOCA event tree may be needed.
ATWS	Anticipated Transients	Reactor Protection System fails	N	Fire-induced failure of the reactor

	Without Scram	safe on loss of power. Trip circuits are highly redundant and confirmed to be physically separated.		protection system is highly unlikely.
SGTR	Steam Generator Tube Rupture		N	Fire-induced rupture of SG tubes is highly unlikely.
MSLB	Main Steamline Break	Includes spurious opening of secondary relief valves.	Y	Fire-induced pipe break is not likely. However, stuck-open SG PORV/atmospheric relief valve or condenser steam dump valve(s) could result in uncontrolled cooldown.
ISLCCW	Interfacing Systems LOCA at RCS/CCW interface	Rupture of Reactor Coolant Pump Cooler	N	Requires passive failure of RCP cooler – not likely coincident with fire.
ISLRHR	Interfacing Systems LOCA at RCS/RHR Interface	Fire-induced opening of RHR suction valves	Y	Spurious opening of both RHR suction valves could result in ISLOCA
New	Spurious Safety Injection with HPI	Requires multiple spurious valve openings and possibly 2nd pump start	See comment	Need to check on potential to cause such an event and the number of spurious events required. Likely to cause reactor trip (manual or automatic on high pressure) if is not or cannot be terminated by operator. Could cause subsequent LOCA.
New	Feedwater ramp-up or AFW spurious start	May require multiple spurious events (need to check)	See comment	Need to check on potential to cause such an event and the number of spurious events required. Likely to cause reactor trip (manual or automatic such as on steam/feed mismatch) if is not or cannot be terminated by operator. Could cause damage to AFW-B pump.
New	RWST drain down event	Requires combination of either or both MOV-5,6 with either or both MOV-3,4 spuriously opening.	See comment	Need to check on potential to cause such an event and the number of spurious events required. Likely to cause procedure-driven manual reactor trip due to loss of initial safety injection water supply / LCO condition for HPI.

Step 2: Review of the Internal Events PRA Against the Fire Safe Shutdown Analysis

TABLE 1: SYSTEMS IN PRA MODEL

System	Description	Additional Details	Address in Fire PRA Model? (Y or N)	Comments
RCS	Reactor Coolant System	PORV for pressure relief and feed & bleed. Stuck-open PORV causes small LOCA.	Y	
CVCS	Chemical and Volume Control System	Normal charging and letdown functions are not modeled. However, components required to isolate charging and letdown are modeled for HPI mode.	Y	Only includes isolation of letdown and charging for operation in HPI mode
HPI	High Pressure Injection System	The charging pumps in the CVCS also function as safety injection pumps.	Y	
RHR	Residual Heat Removal System	Shutdown cooling is not modeled	N	Will be the same as Internal events model
AFW	Auxiliary Feedwater System	Only Trains A and B are modeled	Y	
MFW	Main Feed Water	Would take considerable effort to get cables involved and their locations	N	Although credited in the PRA model, the cost of cable routing out weighs the risk benefit.
MS	Main Steam System	Stuck-open secondary relief valves could	Y	

TABLE 1: SYSTEMS IN PRA MODEL

System	Description	Additional Details	Address in Fire PRA Model? (Y or N)	Comments
		cause equivalent of mainsteam line break.		
CS	Containment Spray	Required for recirculation during LOCA	Y	
CF	Containment Fan Coolers	Required for recirculation during LOCA	Y	
CI	Containment Isolation	Modeled in LERF	Y	
ESFAS	Emergency Safeguards Actuation System		Y	
CCW	Component Cooling Water System		Y	
SW	Service Water System		Y	
AC	AC Power (all voltage levels)	To extent power is needed to support equipment in the PRA.	Y	To extent power is needed to support equipment in the PRA.
DG	Emergency Diesel Generators		Y	
DC	DC Power	To extent power is needed to support	Y	To extent power is needed to support

TABLE 1: SYSTEMS IN PRA MODEL

System	Description	Additional Details	Address in Fire PRA Model? (Y or N)	Comments
		equipment in the PRA.		equipment in the PRA.
IA	Instrument Air	Required for PORV and other valves. Backup nitrogen is provided for PORV and is what is credited.	Y	
HVAC-HPI	HVAC in HPI Pump Room	HVAC is required during 24-hr PRA mission	Y	

TABLE 2: SYSTEMS IN APPENDIX R

System	Description	Additional Details	Address in Fire PRA Model? (Y or N)	Comments
RCS	Reactor Coolant System	PORV to prevent spurious opening and consequential small LOCA.	Y	But need in fire PRA for more than just ensuring closure for Appendix R.
CVCS	Chemical Volume and Control System	Normal charging and letdown functions are credited.	N	Normal charging and letdown functions are not credited in PRA. However isolation of letdown and normal charging is to be modeled for HPI mode.
RHR	Residual heat Removal System	Shutdown cooling is credited	N	Shutdown cooling not credited in PRA
AFW	Auxiliary Feedwater System	Trains A&C are credited	Y	Especially since will not credit MFW, crediting all trains of AFW in the Fire PRA may be important for 'realistic' risk estimates.
MS	Main Steam System	Secondary relief valves and MSIVs are included to prevent spurious opening causing uncontrolled secondary depressurization.	Y	Review from PRA perspective
CCW	Component Cooling Water System		Y	

TABLE 2: SYSTEMS IN APPENDIX R

System	Description	Additional Details	Address in Fire PRA Model? (Y or N)	Comments
SW	Service Water System		Y	
AC	AC Power (all voltage levels)	But certain buses not credited (especially non-safety) if loads not otherwise required for safe shutdown	Y	Need to ensure all buses are included that are needed to support equipment to be modeled in the Fire PRA.
DG	Emergency Diesel Generators		Y	
DC	DC Power	But certain buses not credited (especially non-safety) if loads not otherwise required for safe shutdown	Y	Need to ensure all buses are included that are needed to support equipment to be modeled in the Fire PRA.
IA	Instrument Air	Required for PORV and other valves. Backup nitrogen is provided for PORV.	Y	
RCS Instruments	RCS pressure, temperature, nuclear instrumentation, etc	Required for safe shutdown monitoring.	See comment	Include in model if instruments impact equipment or human failure events in the PRA. See Step 5.
Secondary	Steam Generator level,	Required for safe shutdown	See	Include in model if secondary instruments

TABLE 2: SYSTEMS IN APPENDIX R

System	Description	Additional Details	Address in Fire PRA Model? (Y or N)	Comments
Instruments	Streamline pressure, etc.	monitoring.	comment	impact equipment or human failure events in the PRA. See Step 5.
HVAC-HPI	HVAC in HPI Pump Room	HVAC is required during 72-hr Appendix R mission	Y	Required for PRA during 24-hr mission. 72-hr mission is for cold shutdown and not part of PRA.
HVAC-AFW	HVAC in AFW Pump Room	HVAC is required during 72-hr Appendix R mission	N	72-hr mission is for cold shutdown and not part of PRA. Not required for PRA mission.

TABLE 3: LIST OF BASIC EVENTS IN MODEL	
Basic Event	**Description**
%I2	Interfacing Systems LOCA at RCS/RHR Interface (2 MOVs in series)
%I3	Interfacing Systems LOCA at RCS/CCW interface (Reactor Coolant Pump Cooler rupture)
%T15	LOSS OF COMPONENT COOLING WATER (CCW)
%T23	PARTIAL LOAD REJECTION
%T25	REACTOR TRIP WITH PORV OPENING
%T3	TURBINE TRIP
%T4	LOSS OF MAIN FEEDWATER
%T1	REACTOR TRIP
AFWA-FTR	AFWA fails to run
AFWA-FTS	AFWA fails to start
AFWB-FTR	AFWB fails to run
AFWB-FTS	AFWB fails to start
AOV-1_FTC	PORV AOV-1 fails to CLOSE
AOV-1_FTO	PORV AOV-1 fails to open
AOV-3_FTC	AOV-3 FAILS TO CLOSE
EPS-120VBUSAF	120V BUS A FAULT

TABLE 3: LIST OF BASIC EVENTS IN MODEL	
Basic Event	**Description**
EPS-120VBUSAINVF	FAILURE OF 120V BUS A INVERTER
EPS-125VDCBUSAF	FAULT ON 125V DC BUS A
EPS-125VDCBUSBF	FAULT ON 125V DC BUS B
EPS-125VDCPNLAF	FAULT ON 125V DC PANEL A
EPS-125VDCPNLBF	FAULT ON 125V DC PANEL B
EPS-480VLCAF	480V LOAD CENTER A FAULT
EPS-480VLCAXTF	480V LOAD CENTER A TRANSFORMER FAILS
EPS-480VLCBF	480V LOAD CENTER B FAULT
EPS-480VLCBXTF	480V LOAD CENTER B TRANSFORMER FAILS
EPS-480VMCCA1F	480V MCC A1 FAULT
EPS-480VMCCB1F	480V MCC B1 FAULT
EPS-4VBUSAF	4KV BUS A FAULT
EPS-4VBUSBF	4KV BUS B FAULT
EPS-BATA	FAILURE OF BATTERY A
EPS-BATB	FAILURE OF BATTERY B
EPS-BCAF	FAILURE OF BATTERY CHARGER A
EPS-BCBF	FAILURE OF BATTERY CHARGER B

TABLE 3: LIST OF BASIC EVENTS IN MODEL	
Basic Event	**Description**
EPS-DGAF	FAILURE OF DIESEL GENERATOR A
EPS-DGBF	FAILURE OF DIESEL GENERATOR B
HPIA_FTR	HPIA fails to run
HPIA_FTS	HPIA fails to start
HPIB_FTR	HPIB fails to run
HPIB_FTS	HPIB fails to start
MFWFAIL	MAIN FEEDWATER SYSTEM FAILURE AFTER REACTOR TRIP
MOV-10_FTO	MOV-10 fails to open
MOV-11_FTO	MOV-11 fails to open
MOV-14_FTO	MOV-14 FAILS TO OPEN
MOV-15_FTO	MOV-15 FAILS TO OPEN
MOV-1_FTO	MOV-1 FAILS TO OPEN
MOV-2_FTC	MOV-2 fails to close
MOV-3_FTO	MOV-3 fails to open
MOV-4_FTO	MOV-4 fails to open
MOV-5_FTC	MOV-5 fails to close
MOV-5_FTO	MOV-5 fails to open

TABLE 3: LIST OF BASIC EVENTS IN MODEL	
Basic Event	**Description**
MOV-6_FTC	MOV-6 fails to close
MOV-6_FTO	MOV-6 fails to open
MOV-9_FTO	MOV-9 FAILS TO OPEN
OPER-1	Operator fails to switch over to recirculation
OPER-4	Operator fails to establish feed and bleed cooling
OPER-7	OPERATOR FAILS TO TRIP REACTOR COOLANT PUMP
RCPSEAL	RCP SEAL LOCA GIVEN LOSS OF CCW AND SUCCESSFUL RCP TRIP
SUTF	FAILURE OF START-UP TRANSFORMER (SUT)
UATF	FAILURE OF UNIT AUXILIARY TRANSFORMER (UAT)

Continuation of Step2 and Including Steps 4 thru 6:

TABLE 4: DISPOSTION OF COMPONENTS IN PRA AND APPENDIX R (USE TABLES 1-3 AND FIGURES 1-3)

Equipment ID	Equipment Description	Power Supply	In PRA Model? (Y or N)	In Appendix R? (Y or N)	Add to Fire PRA Equipment List? (Y or N)	Comments
HPI-A	High pressure safety injection pump A	4.16kV Bus A	Y	Y	Y	
HPI-B	High pressure safety injection pump B	4.16kV Bus B	Y	Y	Y	
RHR-B	RHR pump	4.16kV Bus B	N	Y	N	Not modeling shutdown cooling and spurious operation benign to credited functions (See Step 4)
COMP-1	Instrument air compressor	480 V LC 1	Y	Y	Y	To ensure long-term PORV operation
AFW-A	Motor driven AFW pump A	4.16kV Bus A	Y	Y	Y	
AFW-B	Steam driven AFW Pump B	N/A	Y	N	Y	
AFW-C	AFW Pump C	4.16 kV Bus 2	N	Y	Y	Credited in Appendix R. Will be credited for the fire PRA
AOV-1	Pressure operated relief	120VAC Bus	Y	Y (only to	Y	Need for both ensuring

TABLE 4: DISPOSTION OF COMPONENTS IN PRA AND APPENDIX R (USE TABLES 1-3 AND FIGURES 1-3)

Equipment ID	Equipment Description	Power Supply	In PRA Model? (Y or N)	In Appendix R? (Y or N)	Add to Fire PRA Equipment List? (Y or N)	Comments
(SOV-1)	valve	A		ensure remains closed)		closure (does not spuriously open) and to open when needed for feed and bleed.
AOV-2 (SOV-2)	Letdown isolation valve	125 VDC Bus B	N	Y (for normal letdown)	Y	Especially for isolation when needed. See Step 4.
AOV-3 (SOV-3)	Charging pump injection valve	125 VDC Bus B	Y	Y (for normal charging)	Y	Especially for isolation when needed.
MOV-1	HPI valve	480V MCC A1	Y	N	Y	
MOV-2	VCT isolation valve	480V MCC B1	Y	Y (for normal suction to charging)	Y	Especially for isolation when needed.
MOV-3	Cont. sump recirc valve	480V MCC A1	Y	N	Y	Also see Step 4 for spurious operation concerns
MOV-4	Cont. sump recirc valve	480V MCC B1	Y	N	Y	Also see Step 4 for spurious operation concerns
MOV-5	RWST isolation valve	480V MCC A1	Y	N	Y	Need to ensure both open and close when desirable
MOV-6	RWST isolation valve	480V MCC B1	Y	N	Y	Need to ensure both open

TABLE 4: DISPOSTION OF COMPONENTS IN PRA AND APPENDIX R (USE TABLES 1-3 AND FIGURES 1-3)

Equipment ID	Equipment Description	Power Supply	In PRA Model? (Y or N)	In Appendix R? (Y or N)	Add to Fire PRA Equipment List? (Y or N)	Comments
						and close when desirable
MOV-7	RHR inboard suction valve	480V MCC A1	Y (for ISLOCA)	Y (for shutdown cooling)	Y	PRA will not address shutdown cooling but need to address for fire-induced ISLOCA and possible high consequence event (see Step 6)
MOV-8	RHR outboard suction valve	480V MCC B1	Y (for ISLOCA)	Y (for shutdown cooling)	Y	PRA will not address shutdown cooling but need to address for fire-induced ISLOCA and possible high consequence event (see Step 6)
MOV-9	HPI valve	480V MCC B1	Y	N	Y	
MOV-10	AFW discharge valve	480V MCC A1	Y	Y	Y	
MOV-11	AFW discharge valve	125 VDC Bus B	Y	N	Y	
MOV-13	PORV block valve	480V MCC A1	N	Y	Y	
MOV-14	AFW turbine steam line	125 VDC Bus	Y	N	Y	

TABLE 4: DISPOSTION OF COMPONENTS IN PRA AND APPENDIX R (USE TABLES 1-3 AND FIGURES 1-3)

Equipment ID	Equipment Description	Power Supply	In PRA Model? (Y or N)	In Appendix R? (Y or N)	Add to Fire PRA Equipment List? (Y or N)	Comments
	isolation valve	B				
MOV-15	AFW steam inlet throttle valve	125 VDC Bus B	Y	N	Y	
MOV-16	AFW test line isolation valve	480V MCC A1	N	N	N	Potential for significant flow diversion is small. See Step 4
MOV-17	AFW test line isolation valve	480V MCC B1	N	N	N	Potential for significant flow diversion is small. See Step 4
MOV-18	AFW C Pump Discharge	480 V MCC-2	N	Y	Y	
MOV-19	AFW test line isolation valve	480 V MCC-2	N	N	N	Potential for significant flow diversion is small. See Step 4.
V-12	CST isolation valve	N/A	N	Y (for admin purposes to ensure open)	N	Unlikely to be closed/plugged coincident with fire.
LI-1	RWST level	120VAC Bus A	N	Y	Y	See Step 5.

TABLE 4: DISPOSTION OF COMPONENTS IN PRA AND APPENDIX R (USE TABLES 1-3 AND FIGURES 1-3)

Equipment ID	Equipment Description	Power Supply	In PRA Model? (Y or N)	In Appendix R? (Y or N)	Add to Fire PRA Equipment List? (Y or N)	Comments
LI-2	RWST level	120VAC Bus B	N	Y	Y	See Step 5.
LI-3	Cont. sump level	120VAC Bus A	N	Y	Y	See Step 5.
LI-4	Cont. sump level	120VAC Bus B	N	Y	Y	See Step 5.
TI-1	Letdown heat exchanger outlet temp	120VAC Bus A	N	N	Y	See Step 5.
PT-1	RCS pressure	120VAC Bus B	N	N	Y	See Step 5.
A-1	AFW motor high temp	120VAC Bus A	N	N	Y	See Step 5.
SWGR-A	Train A 4160 V Bus	SUT-1 EDG-A	Y	Y	Y	
SWGR-B	Train B 4160 V Bus	SUT-1 EDG-B	Y	Y	Y	
SWGR-1	Non-Safety 4160 V Bus	UAT-1 SUT-1	N	N	Y	

TABLE 4: DISPOSTION OF COMPONENTS IN PRA AND APPENDIX R (USE TABLES 1-3 AND FIGURES 1-3)

Equipment ID	Equipment Description	Power Supply	In PRA Model? (Y or N)	In Appendix R? (Y or N)	Add to Fire PRA Equipment List? (Y or N)	Comments
SWGR-2	Non-Safety 4160 V Bus	UAT-1 SUT-1	N	Y	Y	
SUT-1	Startup Transformer	OSP	Y	Y	Y	
EDG-A	Train A Emergency Diesel Generator	PNL-A	Y	Y	Y	
EDG-B	Train B Emergency Diesel Generator	PNL-B	Y	Y	Y	
LC-1	Non-Safety 480 V Load Center	SST-1	N	N	Y	
LC-2	Non-Safety 480 V Load Center	SST-2	N	Y	Y	
LC-A	Train A 480 V Load Center	SST-A	Y	Y	Y	
LC-B	Train B 480 V Load Center	SST-B	Y	N	Y	
SST-1	Non-Safety Station Service Transformer	SWGR-1	N	N	Y	
SST-2	Non-Safety Station	SWGR-2	N	Y	Y	

TABLE 4: DISPOSTION OF COMPONENTS IN PRA AND APPENDIX R (USE TABLES 1-3 AND FIGURES 1-3)

Equipment ID	Equipment Description	Power Supply	In PRA Model? (Y or N)	In Appendix R? (Y or N)	Add to Fire PRA Equipment List? (Y or N)	Comments
	Service Transformer					
SST-A	Train A Station Service Transformer	SWGR-A	Y	Y	Y	
SST-B	Train B Station Service Transformer	SWGR-B	Y	N	Y	
MCC-1	Non-Safety 480 V Motor Control Center	LC-1	N	N	Y	
MCC-2	Non-Safety 480 V Motor Control Center	LC-2	N	Y	Y	
MCC-A1	Train A 480 V Motor Control Center	LC-A	Y	Y	Y	
MCC-B1	Train B 480 V Motor Control Center	LC-B	Y	N	Y	
BC-1	Non-Safety Swing Battery Charger	MCC-1 MCC-2	N	N	Y	
BC-A	Train A Battery Charger	MCC-A1	Y	N	Y	
BC-B	Train B Battery Charger	MCC-B1	Y	N	Y	
BAT-1	Non-Safety Battery	N/A	N	N	Y	

TABLE 4: DISPOSTION OF COMPONENTS IN PRA AND APPENDIX R (USE TABLES 1-3 AND FIGURES 1-3)

Equipment ID	Equipment Description	Power Supply	In PRA Model? (Y or N)	In Appendix R? (Y or N)	Add to Fire PRA Equipment List? (Y or N)	Comments
BAT-A	Train A Battery	N/A	Y	Y	Y	
BAT-B	Train B Battery	N/A	Y	Y	Y	
DC BUS-1	Non-Safety 125 VDC Bus	BC-1 BAT-1	N	N	Y	
DC BUS-A	Train A 125 VDC Bus	BC-A BAT-A	Y	Y	Y	
DC BUS-B	Train B 125 VDC Bus	BC-B BAT-B	Y	Y	Y	
INV-A	Train A Inverter	DC BUS-A	Y	Y	Y	
INV-B	Train B Inverter	DC BUS-B	N	Y	Y	
VITAL-A	Train A 120 VAC Vital Bus	INV-A	Y	Y	Y	
VITAL-B	Train B 120 VAC Vital Bus	INV-B	N	Y	Y	
PNL-A	Train A 125 VDC Panel	DC BUS-A	Y	Y	Y	
PNL-B	Train B 125 VDC Panel	DC BUS-B	Y	Y	Y	

Step 3: Identify Fire-Induced Initiating Events Based on Equipment Affected

Will need to examine each fire compartment / analysis unit and determine based on the equipment and cables located there, which of the initiators (from Step 1 of Task 2) can be caused by a fire in that compartment / analysis unit. If any new initiators are identified, include in the Fire PRA. The Fire PRA will then include fires mapped to initiating events in the model. Each compartment / analysis unit should have a disposition with regard to the initiating event(s) that occur as a result of a fire in each location (even if "none"). Hold discussion with instructor.

Step 4: Identify Equipment with Potential Spurious Actuations that May Challenge the Mitigating Capability to be Credited

Considered spurious equipment operations	Description	PRA System or Function Possibly Affected	Comments/Disposition
MOV-16	AFW test line isolation valve	Failure of AFW-A due to flow diversion	Fire-induced spurious opening of MOV-16 could occur but flow diversion is not significant. Will not be modeled.
MOV-17	AFW test line isolation valve	Failure of AFW-B due to flow diversion	Fire-induced spurious opening of MOV-17 could occur but flow diversion is not significant. Will not be modeled.
MOV-19	AFW test line isolation valve	Failure of AFW-C due to flow diversion	Fire-induced spurious opening of MOV-19 could occur but flow diversion is not significant. Will not be modeled.
MOV-3	Cont. sump recirc. valve	Failure of high pressure injection	Fire-induced spurious opening of MOV-3 during HPI injection mode will fail HPI – need to model this failure.
MOV-4	Cont. sump recirc. valve	Failure of high pressure injection	Fire-induced spurious opening of MOV-4 during HPI injection mode will fail HPI – need to model this failure.
AOV-2	Letdown isolation valve	Failure of high pressure injection	Loss of CCW with failure to isolate letdown (such as spurious open signal) will result in HPSI pump cavitation
RHR	RHR pump	Spurious operation of pump – investigate effect on HPI & RHR	Could fail RHR pump (assuming no pump suction protection) but RHR shutdown cooling not modeled anyway.

No adverse effect on high pressure injection. No need to model.

Step 5: Identify Additional Mitigating, Instrumentation, and Diagnostic Equipment Important to Human Response

Instrumentation required to perform human actions	Description	Potentially Affected Human Failure Event in PRA model	Comments/Disposition
LI-1	RWST level	OPER-1 Failure to align recirculation	Instrumentation required to identify need to switch over to recirculation. While lots of redundancy with other LI's, all are in close proximity on MCR board and so one fire could affect multiple instruments. Hence will model.
LI-2	RWST level	OPER-1 Failure to align recirculation	Instrumentation required to identify need to switch over to recirculation. While lots of redundancy with other LI's, all are in close proximity on MCR board and so one fire could affect multiple instruments. Hence will model.
LI-3	Cont. sump level	OPER-1 Failure to align recirculation	Instrumentation required to identify need to switch over to recirculation. While lots of redundancy with other LI's, all are in close proximity on MCR board and so one fire could affect multiple instruments. Hence will model.
LI-4	Cont. sump level	OPER-1 Failure to align recirculation	Instrumentation required to identify need to switch over to recirculation. While lots of redundancy with other LI's, all are in close proximity on MCR board and so one fire could affect multiple instruments.

			Hence will model.
TI-1	Letdown heat exchanger outlet temp	OPER-2 Failure to isolate letdown on high temperature due to CCW loss	Instrumentation required to identify need to isolate letdown when CCW is lost
PT-1	RCS pressure	OPER-4 Failure to align feed and bleed	Instrumentation (indicator) required to identify need for feed and bleed
A-1	AFW motor high temp	N/A	Spurious high temperature alarm causes operator to shut down AFW pump erroneously

Step 6: Include Potentially High Consequence Related Equipment

Equipment or combinations of equipment that can cause high consequence event	Description of high consequence event	Comments/Disposition
MOV-7 and MOV-8	Spurious opening of MOV-7 and MOV-8 results in interfacing system LOCA – meets high consequence event definition.	Need to model this combination failure.

Step 7: Assemble Fire PRA Equipment List

Table 1: Fire PRA Equipment List Information (For Instructors)

Equipment ID	Equipment Description	Equipment Type	Location	Power Supply	PRA Event Identifier	PRA Event Description	Normal Position/ Status	Desired Position/ Status	Failed Electrical Position	Failed Air Position
HPI-A[i]	High pressure safety injection pump A	Pump	Aux Bldg. El. 0 Ft	SWGR-A	HPIA_FTS	HPIA fails to start	Standby	On	Off	N/A
					HPIA_FTR	HPIA fails to run	On	On	Off	N/A
HPI-B	High pressure safety injection pump B	Pump	Aux Bldg. El. 0 Ft	SWGR-B	HPIB_FTS	HPIB fails to start	Standby	On	Off	N/A
					HPIB_FTR	HPIB fails to run	On	On	Off	N/A
AFW-A	Motor driven AFW pump A	Pump	Turbine Bldg. El. 0 Ft	SWGR-A	AFWA-FTS	AFWA fails to start	Standby	On	Off	N/A
AFW-A	Motor driven AFW pump A	Pump	Turbine Bldg. El. 0 Ft	Turbine Bldg. El. 0 Ft	AFWA-FTR	AFWA fails to run	On	On	Off	N/A
AFW-B	Steam driven AFW pump B	Pump	Turbine Bldg. El. 0 Ft	N/A	AFWB-FTS	AFWB fails to start	Standby	On	N/A	N/A
AFW-B	Steam driven AFW pump B	Pump	Turbine Bldg. El. 0 Ft	N/A	AFWB-FTR	AFWB fails to run	On	On	N/A	N/A
AFW-C	Motor driven AFW pump C	Pump	Turbine Bldg. El. 0 Ft	SWGR-2	AFWC-FTS	AFWC fails to start	Standby	On	Off	N/A
AFW-C	Motor driven AFW pump C	Pump	Turbine Bldg. El. 0 Ft	SWGR-2	AFWC-FTR	AFWC fails to run	Standby	On	Off	N/A
RCP	Reactor coolant pump	Pump	Containment	SWGR-1	RCP1-FTT	RCP 1 fails to trip	On	Off	Off	N/A
COMP-1	Instrument air compressor	Compressor	Turbine Bldg. El. 0 Ft	LC-1	IA-COMP1_FTS	Instrument air compressor fails to start	Cycle	Cycle	Off	N/A
COMP-1	Instrument air compressor	Compressor	Turbine Bldg. El. 0 Ft	LC-1	IA-COMP1_FTR	Instrument air compressor fails to run	Cycle	Cycle	Off	N/A

Equipment ID	Equipment Description	Equipment Type	Location	Power Supply	PRA Event Identifier	PRA Event Description	Normal Position/ Status	Desired Position/ Status	Failed Electrical Position	Failed Air Position
AOV-1[ii] (SOV-1)	Power operated relief valve	AOV	Containment	VITAL-A	AOV-1_TO	PORV AOV-1 transfers open	Closed	Closed	Closed	Closed
					AOV-1_FTO	PORV AOV-1 fails to open	Closed	Open	Closed	Closed
AOV-2[iii] (SOV-2)	Letdown isolation valve	AOV	Aux Bldg. El. 0 Ft	DC BUS-B	AOV-2_FTC	AOV-2 fails to close	Open	Closed	Closed	Closed
AOV-3[iv] (SOV-3)	Charging pump injection valve	AOV	Aux Bldg. El. 0 Ft	DC BUS-B	AOV-3_FTC	AOV-3 FAILS TO CLOSE	Open	Closed	Closed	Closed
MOV-1	HPI discharge valve	MOV	Aux Bldg. El. 0 Ft	MCC-A1	MOV-1_FTO	MOV-1 FAILS TO OPEN	Closed	Open	As Is	N/A
MOV-2[v]	VCT isolation valve	MOV	Aux Bldg. El. 0 Ft	MCC-B1	MOV-2_FTC	MOV-2 fails to close	Open	Closed	As Is	N/A
MOV-3[vi]	Cont. sump recirc valve	MOV	Aux Bldg. El. -20 Ft	MCC-A1	MOV-3_FTO	MOV-3 fails to open	Closed	Open	As Is	N/A
					MOV-3_TO	MOV-3 TRANSFERS OPEN	Closed	Closed	As Is	N/A
MOV-4	Cont. sump recirc valve	MOV	Aux Bldg. El. -20 Ft	MCC-B1	MOV-4_FTO	MOV-4 fails to open	Closed	Open	As Is	N/A
					MOV-4 _TO	MOV-4 TRANSFERS OPEN	Closed	Closed	As Is	N/A
MOV-5	RWST isolation valve	MOV	Aux Bldg. El. 0 Ft	MCC-A1	MOV-5_FTO	MOV-5 fails to open	Closed	Open/Closed	As Is	N/A
MOV-6	RWST isolation valve	MOV	Aux Bldg. El. 0 Ft	MCC-B1	MOV-6_FTO	MOV-6 fails to open	Closed	Open/Closed	As Is	N/A
MOV-7[vii]	RHR inboard suction valve	MOV	Containment	MCC-A1	MOV-7_TO	MOV-7 TRANSFERS OPEN	Closed	Closed	As Is	N/A
MOV-8	RHR outboard suction valve	MOV	Aux Bldg. El. -20 Ft	MCC-B1	MOV-8_TO	MOV-8 TRANSFERS OPEN	Closed	Closed	As Is	N/A
MOV-9	HPI discharge valve	MOV	Aux Bldg. El. 0 Ft	MCC-B1	MOV-9_FTO	MOV-9 FAILS TO OPEN	Closed	Open	As Is	N/A
MOV-10	AFW pump A discharge valve	MOV	Turbine Bldg. El. 0 Ft	MCC-A1	MOV-10_FTO	MOV-10 fails to open	Closed	Open	As Is	N/A
MOV-11	AFW pump B discharge valve	MOV	Turbine Bldg. El. 0 F	DC BUS-B	MOV-11_FTO	MOV-11 fails to open	Closed	Open	As is	N/A

Equipment ID	Equipment Description	Equipment Type	Location	Power Supply	PRA Event Identifier	PRA Event Description	Normal Position/ Status	Desired Position/ Status	Failed Electrical Position	Failed Air Position
MOV-13	PORV block valve	MOV	Containment	MCC-A1	MOV-13_FTC	MOV-13 fails to close	Open	Open/ Closed	As is	N/A
MOV-14	AFW pump B turbine steam line isolation valve	MOV	Turbine Bldg. El. 0 Ft	DC BUS-B	MOV-14_FTO	MOV-14 FAILS TO OPEN	Closed	Open	As-Is	N/A
MOV-15	AFW pump B steam inlet throttle valve	MOV	Turbine Bldg. El. 0 Ft	DC BUS-B	MOV-15_FTO	MOV-15 FAILS TO OPEN	Closed	Throttled	As-Is	N/A
MOV-18	AFW pump C discharge valve	MOV	Turbine Bldg. El. 0 Ft	MCC-2	MOV-18_FTO	MOV-18 fails to open	Closed	Open	As-Is	N/A
LI-1[viii]	RWST level	Instrument	Yard	VITAL-A	LI-1_FL	RWST Level indication fails low	Available	Available	Low	N/A
					LI-1_FH	RWST Level indication fails high	Available	Available	High	N/A
LI-2	RWST level	Instrument	Yard	VITAL-B	LI-2_FL	RWST Level indication fails low	Available	Available	Low	N/A
					LI-2_FH	RWST Level indication fails high	Available	Available	High	N/A
LI-3	Cont. sump level	Instrument	Containment	VITAL-A	LI-3_FH	Cont sump Level indication fails high	Available	Available	High	N/A
LI-4	Cont. sump level	Instrument	Containment	VITAL-B	LI-4_FH	Cont sump Level indication fails high	Available	Available	High	N/A
TI-1[ix]	Letdown heat exchanger outlet temp	Instrument	Aux Bldg. El. 0 Ft	VITAL-A	TI-1_FL	Letdown temperature indication fails low	Available	Available	Low	N/A
PT-1[x]	RCS pressure	Instrument	Containment	VITAL-B	PI-1_FH	RCS pressure indication fails high	Available	Available	High	N/A
A-1	AFW motor high temperature	Annunciator	SWG Access Room	VITAL-A	ANN-1_FH	AFW motor high temperature annunciator spuriously indicates high	Available	Non spurious	Unavailable	N/A
SWGR-A[xi]	Train A 4160 V switchgear	Switchgear	Switchgear Room A	SUT-1 DC BUS-A	PNL-A EPS-4VBUSAF-1	4KV BUS A FAULT	Energized from SUT-1	Energized from SUT-1	De-Energized	N/A

Equipment ID	Equipment Description	Equipment Type	Location	Power Supply	PRA Event Identifier	PRA Event Description	Normal Position/ Status	Desired Position/ Status	Failed Electrical Position	Failed Air Position
				EDG-A DC BUS-A	PNL-A EPS-4VBUSAF-2	4KV BUS A FAULT	Energized from SUT-1	Energized from EDG-A	De-Energized	N/A
SWGR-B	Train B 4160 V switchgear	Switchgear	Switchgear Room B	SUT-1 DC BUS-B	PNL-B EPS-4VBUSBF-1	4KV BUS A FAULT	Energized from SUT-1	Energized from SUT-1	De-Energized	N/A
				EDG-B DC BUS-B	PNL-B EPS-4VBUSBF-2	4KV BUS A FAULT	Energized from SUT-1	Energized from EDG-B	De-Energized	N/A
SWGR-1	Non-safety 4160 V switchgear	Switchgear	Turbine Bldg. El. 0ft	UAT-1 SUT-1	EPS-4VBUS1F	4KV BUS 1 FAULT	Energized	Energized	De-Energized	N/A
SWGR-2	Non-safety 4160 V switchgear	Switchgear	Turbine Bldg. El. 0ft	UAT-1 SUT-1	EPS-4VBUS2F	4KV BUS 2 FAULT	Energized	Energized	De-Energized	N/A
SUT-1	Startup transformer	Transformer	Yard	OSP	SUTF	FAILURE OF START-UP TRANSFORMER (SUT)	Energized	Energized	De-Energized	N/A
EDG-A	Train A emergency diesel generator	Diesel Generator	DG Bldg.	DC BUS-A	EPS-DGAF	FAILURE OF DIESEL GENERATOR A	Standby	On	Off	N/A
EDG-B	Train B emergency diesel generator	Diesel Generator	DG Bldg.	DC BUS-B	EPS-DGBF	FAILURE OF DIESEL GENERATOR B	Standby	On	Off	N/A
LC-1	Non-safety 480 V load center	Load Center	Turbine Bldg. El. 0 ft	SST-1	EPS-480VLC1F	480V LOAD CENTER 1 FAULT	Energized	Energized	De-Energized	N/A
LC-2	Non-safety 480 V load center	Load Center	Turbine Bldg. El. 0 ft	SST-2	EPS-480VLC2F	480V LOAD CENTER 2 FAULT	Energized	Energized	De-Energized	N/A
LC-A	Train A 480 V load center	Load Center	Switchgear Room A	SST-A PNL-A	EPS-480VLCAF	480V LOAD CENTER A FAULT	Energized	Energized	De-Energized	N/A
LC-B	Train B 480 V load center	Load Center	Switchgear Room B	SST-B PNL-B	EPS-480VLCBF	480V LOAD CENTER B FAULT	Energized	Energized	De-Energized	N/A
SST-1	Non-safety station service transformer	Transformer	Turbine Bldg. El. 0 F	SWGR-1	EPS-480VLC1XTF	480V LOAD CENTER 1 TRANSFORMER FAILS	Energized	Energized	De-Energized	N/A

Equipment ID	Equipment Description	Equipment Type	Location	Power Supply	PRA Event Identifier	PRA Event Description	Normal Position/ Status	Desired Position/ Status	Failed Electrical Position	Failed Air Position
SST-2	Non-safety station service transformer	Transformer	Turbine Bldg. El. 0 F	SWGR-2	EPS-480VLC2XTF	480V LOAD CENTER 2 TRANSFORMER FAILS	Energized	Energized	De-Energized	N/A
SST-A	Train A station service transformer	Transformer	Switchgear Room A	SWGR-A	EPS-480VLCAXTF	480V LOAD CENTER A TRANSFORMER FAILS	Energized	Energized	De-Energized	N/A
SST-B	Train B station service transformer	Transformer	Switchgear Room B	SWGR-B	EPS-480VLCBXTF	480V LOAD CENTER B TRANSFORMER FAILS	Energized	Energized	De-Energized	N/A
MCC-1	Non-safety 480 V motor control center	Motor Control Center	Turbine Bldg. El. 0 Ft	LC-1	EPS-480VMCC1F	480V MCC 1 FAULT	Energized	Energized	De-Energized	N/A
MCC-2	Non-safety 480 V motor control center	Motor Control Center	Turbine Bldg. El. 0 Ft	LC-2	EPS-480VMCC2F	480V MCC 2 FAULT	Energized	Energized	De-Energized	N/A
MCC-A1	Train A 480 V motor control center	Motor Control Center	SWG Access Room	LC-A	EPS-480VMCCA1F	480V MCC A1 FAULT	Energized	Energized	De-Energized	N/A
MCC-B1	Train B 480 V motor control center	Motor Control Center	SWG Access Room	LC-B	EPS-480VMCCB1F	480V MCC B1 FAULT	Energized	Energized	De-Energized	N/A
ATS-1	Automatic transfer switch	ATS	SWG Access Room	MCC-1 MCC-2	EPS-ATS1F	AUTOMATIC TRANSFER SWITCH ATS-1 FAILS	Energized from MCC-1	Energized from MCC-1	De-Energized	N/A
BC-1	Non-safety swing battery charger	Battery Charger	Turbine Bldg. El. 0 Ft	ATS-1	EPS-BC1F	FAILURE OF BATTERY CHARGER 1	Energized	Energized	De-Energized	N/A
BC-A	Train A battery charger	Battery Charger	Switchgear Room A	MCC-A1	EPS-BCAF	FAILURE OF BATTERY CHARGER A	Energized	Energized	De-Energized	N/A
BC-B	Train B battery charger	Battery Charger	Switchgear Room B	MCC-B1	EPS-BCBF	FAILURE OF BATTERY CHARGER B	Energized	Energized	De-Energized	N/A
BAT-1	Non-safety battery	Battery	Turbine Bldg. El. 0 Ft	N/A	EPS-SB	FAILURE OF STATION BATTERY	Available	Available	Unavailable	N/A
BAT-A	Train A battery	Battery	Battery Room A	N/A	EPS-BATA	FAILURE OF BATTERY A	Available	Available	Unavailable	N/A
BAT-B	Train B battery	Battery	Battery Room B	N/A	EPS-BATB	FAILURE OF BATTERY B	Available	Available	Unavailable	N/A
DC BUS-1	Non-safety 125 VDC bus	DC Bus	Turbine Bldg. El. 0 Ft	BC-1 BAT-1	EPS-125VNSDCBUSF	FAULT ON 125V NON-SAFETY DC BUS	Energized	Energized	De-Energized	N/A

Equipment ID	Equipment Description	Equipment Type	Location	Power Supply	PRA Event Identifier	PRA Event Description	Normal Position/ Status	Desired Position/ Status	Failed Electrical Position	Failed Air Position
DC BUS-A	Train A 125 VDC bus	DC Bus	Switchgear Room A	BC-A BAT-A	EPS-125VDCBUSAF	FAULT ON 125V DC BUS A	Energized	Energized	De-Energized	N/A
DC BUS-B	Train B 125 VDC bus	DC Bus	Switchgear Room B	BC-B BAT-B	EPS-125VDCBUSBF	FAULT ON 125V DC BUS B	Energized	Energized	De-Energized	N/A
PNL-A	Train A 125 VDC panel	Panel board	Switchgear Room A	DC BUS-A	EPS-125VDCPNLAF	FAULT ON 125V DC PANEL A	Energized	Energized	De-Energized	N/A
PNL-B	Train B 125 VDC panel	Panel board	Switchgear Room B	DC BUS-B	EPS-125VDCPNLBF	FAULT ON 125V DC PANEL A	Energized	Energized	De-Energized	N/A
INV-A	Train A inverter	Inverter	Switchgear Room A	DC BUS-A	EPS-120VBUSAINVF	FAILURE OF 120V BUS A INVERTER	Energized	Energized	De-Energized	N/A
INV-B	Train B inverter	Inverter	Switchgear Room B	DC BUS-B	EPS-120VBUSAINVF	FAILURE OF 120V BUS B INVERTER	Energized	Energized	De-Energized	N/A
VITAL-A	Train A 120 VAC vital bus	120VAC Bus	SWG Access Room	INV-A	EPS-120VBUSAF	120V BUS A FAULT	Energized	Energized	De-Energized	N/A
VITAL-B	Train B 120 VAC vital bus	120VAC Bus	SWG Access Room	INV-B	EPS-120VBUSBF	120V BUS A FAULT	Energized	Energized	De-Energized	N/A

Notes:

Legend
Appendix R
Components/failures added to PRA for Fire PRA Model

[i] HPI pumps A & B are in Appendix R for normal charging function; not for HPI.
[ii] Closed to prevent LOCA /Open for feed and bleed. Appendix R has valve only to ensure remains closed.
[iii] AOV-2 in Appendix R only for normal letdown function.
[iv] AOV-3 in Appendix R only for normal charging function.
[v] MOV-2 in Appendix R only for normal suction to charging.

[vi] MOV-3 and MOV-4 need to be closed for when using RWST water supply for HPI / Open for recirculation mode of injection. MOVs 5 & 6 are correspondingly open for RWST use and closed for recirc.

[vii] Valve electrically blocked closed. Control power fuses are supposed to be removed. MOV-7 & 8 in Appendix R for both normal isolation and shutdown cooling functions.

[viii] If RWST level indication fails high the operator will fail to establish recirculation. If the RWST level fails low and containment sump level fails high, the operator will establish suction to dry sump and fail the HPI the pumps due to insufficient suction. Need to resolve failure mode.

[ix] If letdown temperature indication fails low, the operator will fail to isolate the letdown line on loss of CCW. This will cause HPI pumps to cavitate due to high temperature in the suction line.

[x] If RCS pressure instrument fails high, the low pressure signal to initiate emergency safeguards actuation during a lire-induced LOCA will not be initiated

[xi] For SWGR-A or SWGR-B, only one basic event is used in the model. However, the circuit analysis impact to the switchgear is a function of the power supply

NRC FORM 335
(9-2004)
NRCMD 3.7

U.S. NUCLEAR REGULATORY COMMISSION

BIBLIOGRAPHIC DATA SHEET

(See instructions on the reverse)

1. REPORT NUMBER
(Assigned by NRC, Add Vol., Supp., Rev., and Addendum Numbers, if any.)

NUREG/CP-0194 Volume 1

2. TITLE AND SUBTITLE

Methods for Applying Risk Analysis to Fire Scenarios (MARIAFIRES) - 2008, NRC-RES/EPRI Fire PRA Workshop, Volume 1 - Module 1: PRA/HRA

3. DATE REPORT PUBLISHED

MONTH	YEAR
July	2010

4. FIN OR GRANT NUMBER

5. AUTHOR(S)

Compiled and edited by D. Stroup, F. Gonzalez, and H. Woods (NRC)

6. TYPE OF REPORT

Conference Proceedings

7. PERIOD COVERED *(Inclusive Dates)*

8. PERFORMING ORGANIZATION - NAME AND ADDRESS *(If NRC, provide Division, Office or Region, U.S. Nuclear Regulatory Commission, and mailing address; if contractor, provide name and mailing address.)*

U.S. Nuclear Regulatory Commission, Office of Nuclear Regulatory Research (RES), Washington, DC 20555-0001
Electric Power Research Institute (EPRI), 3420 Hillview Avenue, Palo Alto, CA 94303

9. SPONSORING ORGANIZATION - NAME AND ADDRESS *(If NRC, type "Same as above"; if contractor, provide NRC Division, Office or Region, U.S. Nuclear Regulatory Commission, and mailing address.)*

U.S. Nuclear Regulatory Commission, Office of Nuclear Regulatory Research (RES), Washington, DC 20555-0001
Electric Power Research Institute (EPRI), 3420 Hillview Avenue, Palo Alto, CA 94303

10. SUPPLEMENTARY NOTES

NRC-RES/EPRI Fire PRA Workshops conducted Sept. 28 - Oct. 2, 2008 and Nov. 17-20, 2008 in Bethesda, MD

11. ABSTRACT *(200 words or less)*

The U.S. Nuclear Regulatory Commission (NRC) approved the risk-informed and performance-based alternative regulation 10 CFR 50.48(c) in July 2004, which allows licensees the option of using fire protection requirements contained in the National Fire Protection Association (NFPA) Standard 805, "Performance Based Standard for Fire protection for Light-Water Reactor Electric Generating Plants, 2001 Edition," with certain exceptions. To support licensees' use of that option, the NRC and the Electric Power Research Institute (EPRI) jointly issued NUREG/CR-6850 (EPRI 1011989) "Fire PRA Methodology for Nuclear Power Facilities," in September 2005. That report documents the state-of-the-art methods, tools, and data for conducting a fire Probabilistic Risk Assessment (PRA) in a commercial nuclear power plant (NPP) application. Since the release of NUREG/CR-6850 in 2005, the NRC-RES and EPRI have conducted a number of joint public workshops to provide training in the use of the methodologies and tools contained in the document. The workshops have attracted both domestic and international. The material in this NUREG/CP was recorded during two workshops conducted in 2008. It was adapted by NRC-RES Fire Research Branch (FRB) members for use as an alternative training method for those who were unable to physically attend the training sessions. This report can also serve as a refresher for those who attended one or more training sessions, and would be useful preparatory material for those planning to attend a session.

12. KEY WORDS/DESCRIPTORS *(List words or phrases that will assist researchers in locating the report.)*

fire, performance-based, risk-Informed regulation, fire hazard analysis (FHA), fire safety, fire protection, nuclear power plant, probabilistic risk assessment (PRA), fire modeling, circuit analysis

13. AVAILABILITY STATEMENT

unlimited

14. SECURITY CLASSIFICATION

(This Page)
unclassified

(This Report)
unclassified

15. NUMBER OF PAGES

16. PRICE

PRINTED ON RECYCLED PAPER

Export Control Restrictions

Access to and use of this report is granted with the specific understanding and requirement that responsibility for ensuring full compliance with all applicable U.S. and foreign export laws and regulations is being undertaken by you and your company. This includes an obligation to ensure that any individual receiving access hereunder who is not a U.S. citizen or permanent U.S. resident is permitted access under applicable U.S. and foreign export laws and regulations. In the event you are uncertain whether you or your company may lawfully obtain access to this report, you acknowledge that it is your obligation to consult with your company's legal counsel to determine whether this access is lawful. Although EPRI may make available on a case-by-case basis an informal assessment of the applicable U.S. export classification for specific report, you and your company acknowledge that this assessment is solely for informational purposes and not for reliance purposes. You and your company acknowledge that it is still the obligation of you and your company to make your own assessment of the applicable U.S. export classification and ensure compliance accordingly. You and your company understand and acknowledge your obligations to make a prompt report to EPRI and the appropriate authorities regarding any access to or use of this report hereunder that may be in violation of applicable U.S. or foreign export laws or regulations.

Electric Power Research Institute and EPRI are registered service marks of the Electric Power Research Institute, Inc.

Printed on recycled paper in the United States of America

EPRI 1020621

The Electric Power Research Institute (EPRI)

The Electric Power Research Institute (EPRI), with major locations in Palo Alto, California, and Charlotte, North Carolina, was established in 1973 as an independent, nonprofit center for public interest energy and environmental research. EPRI brings together members, participants, the Institute's scientists and engineers, and other leading experts to work collaboratively on solutions to the challenges of electric power. These solutions span nearly every area of electricity generation, delivery, and use, including health, safety, and environment. EPRI's members represent over 90% of the electricity generated in the United States. International participation represents nearly 15% of EPRI's total research, development, and demonstration program.

Together...Shaping the Future of Electricity

United States Nuclear Regulatory Commission
Washington, D.C.

NUREG/CP-0194

ELECTRIC POWER RESEARCH INSTITUTE
3420 Hillview Avenue, Palo Alto, California 94304-1395 • PO Box 10412, Palo Alto, California 94303-0813 USA
800.313.3774 • 650.855.2121 • askepri@epri.com • www.epri.com