Exelon Generation Company, LLC
4300 Winfield Road
Warrenville, IL 60555

www.exeloncorp.com

Exelon Nuclear

RS-10-118

10 CFR 50.90

July 14, 2010

U. S. Nuclear Regulatory Commission
ATTN: Document Control Desk
Washington, DC 20555-0001

Clinton Power Station, Units 1
Facility Operating License No. NPF-62
NRC Docket No. 50-461

Subject: Response to Request for Additional Information Related to Relief Requests I3R-01, I3R-02, I3R-03, I3R-04, and I3R-05 (TAC Nos. ME2987, ME2988, ME2989, ME2990, and ME2991)

References:

1. Letter from Jeffrey L. Hansen (Exelon Generation Company, LLC) to U. S. NRC, " Relief Requests Associated with the Third Inservice Inspection Interval," dated December 30, 2009
2. Letter from U. S. NRC to M. J. Pacilio (Exelon Generation Company, LLC), "Request for Additional Information Related to Relief Requests I3R-01, I3R-02, I3R-03, I3R-04, and I3R-05 (TAC Nos. ME2987, ME2988, ME2989, ME2990, and ME2991)," dated June 14, 2010

In Reference 1, Exelon Generation Company, LLC (EGC) requested approval of relief requests associated with the upcoming third 10-year Inservice Inspection (ISI) Program Interval at Clinton Power Station, Unit 1 (CPS).

During its review of Reference 1, the NRC found that additional information was required to support its review as discussed in Reference 2. The requested information is provided in the attachments to this letter.

There are no regulatory commitments contained within this letter.

Should you have any questions concerning this letter, or require additional information, please contact Mitchel A. Mathews at (630) 657-2819.

Respectfully,

Jeffrey L. Hansen
Manager – Licensing and Regulatory Affairs
Exelon Generation Company, LLC

Attachments:

1. Response to NRC Request for Additional Information
2. Clinton Power Station (CPS) Third Inservice Inspection (ISI) Program Interval Risk-Informed (RI)-ISI Tables

[Requests Associated With] I3R-01

1. ***Do the following CPS augmented inspection programs remain unaffected by the RI-ISI program for the third 10-year inservice inspection interval?***

   - ***Service Water Integrity Program (Generic Letter 89-13)***
   - ***Flow Accelerated Corrosion (FAC) (Generic Letter 89-08)***
   - ***High-Energy Line Breaks (USNRC Branch Technical Position MEB 3-1)***

   EGC Response

   For the Clinton Power Station (CPS) Third Inservice Inspection (ISI) Interval, the augmented Service Water and Flow-Accelerated Corrosion (FAC) programs remain unaffected by the Risk Informed (RI)-ISI program. The augmented High Energy Line Break (HELB) Break Exclusion Region (BER) program was integrated in the Second Interval RI-ISI program and will remain integrated within the RI-ISI program for the Third ISI Interval. This integration occurred in March 2005 under Revision 1 of the RI-ISI program in accordance with Electric Power Research Institute (EPRI) Technical Report (TR)-1006937, "Extension of the EPRI Risk-Informed Inservice Inspection (RI-ISI) Methodology to Break Exclusion Region (BER) Programs," Rev. 0-A, including the associated NRC Safety Evaluation.

2. ***Are the inspection locations in the RI-ISI program that have been developed for the third 10-year interval the same locations as those in the program approved in the NRC staffs April 8, 2002, safety evaluation? If not, please summarize the changes to the program and what caused those changes.***

   EGC Response

   The RI-ISI program is required to be and has been maintained as a living program assessing component and configuration changes and major Probabilistic Risk Assessment (PRA) model revisions throughout the Second ISI Interval. As part of the Third Interval update process, the consequence and degradation assignments and resultant component risk rankings have been confirmed or updated, element selections have been adjusted, and the risk impact assessment has been revised. The final RI-ISI evaluation for the previous Second ISI Interval was Revision 2 dated December 2007. The latest evaluation, Revision 3 dated May 2010, is the current evaluation developed as part of the new Third Interval RI-ISI program. The changes in inspection locations from the initial Second Interval RI-ISI program (Revision 0 dated September 2001) to the new Third Interval RI-ISI program are summarized in the table below.

Table 1: CPS Unit 1 Selection Summary

Risk Rank	Interval 2 Exams (RI-ISI Rev. 0)	Interval 3 Exams (RI-ISI Rev. 3)	Items Affecting Changes
High	33	37	▪ Limited Exam Coverage ▪ Plant/Component Modifications ▪ PRA Model Revisions[1] ▪ Integration of Augmented Break Exclusion Region
Medium	41	49	▪ Limited Exam Coverage ▪ Plant/Component Modifications ▪ PRA Model Revisions[1] ▪ Revised Makeup Calc ▪ Integration of Augmented Break Exclusion Region
Total	74	86	

[1] Latest incorporated revision is PRA Model 2006C

Limited Exam Coverage – The welds selected for examination were changed in some cases to optimize examination code coverage.

Plant Modifications – As discussed above, the RI-ISI program has been maintained throughout the Second ISI Interval as a living program. Various minor plant modifications were installed throughout the interval and were evaluated for impact to the RI-ISI program, and when applicable, changes to the RI-ISI scope and element selections were made. No major component replacements or new system installations were made during this period affecting the RI-ISI program.

PRA Model Revisions – The CPS PRA Model applicable to the RI-ISI update was revised in March 2007 and issued as Model 2006C. As the model is updated throughout the interval, impact on the RI-ISI program is assessed and the program is updated as necessary.

Revised Makeup Calculation – As part of the Third Interval ISI program, the version of ASME Section XI was updated to the 2004 Edition, No Addenda as required by 10CFR50.55a. To implement the new code of record, CPS updated the plant normal makeup calculation for application under IWB-1220(a). As a result of this update, some smaller diameter lines previously exempted were added into the RI-ISI scope.

Integration of Augmented Break Exclusion Region – In Revision 1 of the RI-ISI evaluation, the augmented break exclusion region inspection (BER or HELB) was added to the RI-ISI program scope. Evaluation, ranking, and selections were made in accordance with EPRI TR-1006937 and the associated NRC safety evaluation.

3. ***If there are changes in the inspection locations for the CPS third 10-year interval RI-ISI program, please provide information for the third interval program regarding: examinations/system/components/degradation mechanisms/class, etc. similar to that provided in Tables 1, 2, 3, 4 and 5 of the original submittal of the RI-ISI program for the CPS second 10-year ISI interval dated October 15, 2001.***

   EGC Response

   A summary of the changes to the inspection locations between the original RI-ISI program implemented in the Second ISI Interval and the revised program prepared for the Third ISI Interval is contained in the response to NRC Request No. 2 above. Updated tables similar to those provided in the original submittal of the RI-ISI program are included as Attachment 2 to this response.

4. ***On page 2 of Enclosure 1 to Attachment 1 to the application, a "current industry peer review of the Clinton PRA" is identified as scheduled for the fourth quarter of 2009. State whether the results of this industry peer review are available. If the results are available, identify any new findings that are not already listed in "Table 1: Impact of Open Significant PRA Peer Review Findings for the Clinton PRA Model." Provide an impact assessment of any new findings.***

   EGC Response

   The results of the recent CPS PRA Peer Review are summarized in Table 4 with a disposition of the associated impacts on the CPS RI-ISI conclusions. These peer review assessments do not change the conclusions of the CPS RI-ISI risk assessment.

   The scope of the peer review results summarized here is with respect to the key Supporting Requirements (SRs) defined for the Mitigation System performance Index (MSPI) program in Nuclear Energy Institute (NEI) 99-02, "Regulatory Assessment Performance Indicator Guideline," Revision 6. The SRs identified in NEI 99-02 as relevant to MSPI calculations are also applicable for determining the necessary PRA quality for RI-ISI calculations. MSPI addresses mitigating systems for loss of coolant accident initiating events, as well as other initiating events. These same mitigating systems are important to RI-ISI, and the same PRA elements would be applicable.

   In addition, the limited manner of PRA involvement in the RI-ISI process is also reflected in the risk-informed license application guidance provided in NRC Regulatory Guide (RG) 1.174, "Risk-Informed Decisions on Plant-Specific Changes to the Licensing Basis," Revision 1. Section 2.2.6 of RG 1.174 provides the following insight into PRA capability requirements for this type of application:

   > *There are, however, some applications that, because of the nature of the proposed change, have a limited impact on risk, and this is reflected in the impact on the elements of the risk model.*

An example is risk-informed inservice inspection (RI-ISI). In this application, risk significance was used as one criterion for selecting pipe segments to be periodically examined for cracking. During the staff review it became clear that a high level of emphasis on PRA technical acceptability was not necessary. Therefore, the staff review of plant-specific RI-ISI typically will include only a limited scope review of PRA technical acceptability.

In the RI-ISI program at CPS, the EPRI RI-ISI methodology as discussed in EPRI TR-112657, "Revised Risk-Informed Inservice Inspection Evaluation Procedure," Revision B-A, is used to define alternative inservice inspection requirements. Plant-specific PRA-derived risk significance information is used during the RI-ISI plan development to support the consequence assessment, risk ranking, element selection and delta risk evaluation steps.

The importance of PRA consequence results, and therefore the scope of PRA technical capability, is tempered by three fundamental components of the EPRI methodology.

First, PRA consequence results are binned into one of three conditional core damage probability (CCDP) and conditional large early release probability (CLERP) ranges before any welds are chosen for RI-ISI inspection as illustrated in Table 2 below. Broad ranges are used to define these bins so that the impact of uncertainty is minimized and only substantial PRA changes would be expected to have an impact on the consequence ranking results.

Table 2: CCDP and CLERP Thresholds for Inclusion of Welds in RI-ISI Program

Consequence Results Binning Groups		
Consequence Category	**CCDP Range**	**CLERP Range**
High	CCDP > 1E-4	CLERP > 1E-5
Medium	1E-6 < CCDP ≤ 1E-4	1E-7 < CLERP ≤ 1E-5
Low	CCDP ≤ 1E-6	CLERP ≤ 1E-7

The risk importance of a weld is therefore not tied directly to a specific PRA result. Instead, it depends only on the range in which the PRA result falls. As a consequence, any PRA modeling uncertainties would be mitigated by the wide binning provided in the methodology. Additionally, conservatism in the binning process (e.g., as would typically be introduced through PRA attributes meeting ASME PRA Standard Capability Category I versus II) will tend to result in a larger inspection population.

Secondly, the impacts of particular PRA consequence results are further dampened by the joint consideration of the weld failure potential via a non-PRA-dependent damage mechanism assessment. The results of the consequence assessment and the damage mechanism assessment are combined to determine the risk ranking of each pipe segment

(and ultimately each element) according to the EPRI Risk Matrix. The Risk Matrix, which equally takes both assessments into consideration, is reproduced in Table 3 below.

Table 3: EPRI Risk Matrix

POTENTIAL FOR PIPE RUPTURE PER DEGRADATION MECHANISM SCREENING CRITERIA	CONSEQUENCES OF PIPE RUPTURE IMPACTS ON CONDITIONAL CORE DAMAGE PROBABILITY AND LARGE EARLY RELEASE PROBABILITY			
	NONE	LOW	MEDIUM	HIGH
HIGH FLOW ACCELERATED CORROSION	LOW Category 7	MEDIUM Category 5	HIGH Category 3	HIGH Category 1
MEDIUM OTHER DEGRADATION MECHANISMS	LOW Category 7	LOW Category 6	MEDIUM Category 5	HIGH Category 2
LOW NO DEGRADATION MECHANISMS	LOW Category 7	LOW Category 7	LOW Category 6	MEDIUM Category 4

Thirdly, the EPRI RI-ISI methodology uses an absolute risk ranking approach. As such, conservatism in either the consequence assessment or the failure potential assessment will result in a larger inspection population rather than masking other important components. That is, providing more realism into the PRA model (e.g., by meeting higher capability categories) most likely would result in a smaller inspection population.

These three facets of the methodology reduce the importance and influence of PRA on the final list of candidate welds.

The results of the recent CPS PRA peer review are provided in Table 4 with respect to the key SRs applicable to the MSPI program, as outlined in NEI 99-02 Appendix G.

Table 4: SUMMARY OF CPS PRA PEER REVIEW RESULTS AND IMPACT ON RI-ISI

SR ID[(1),(2)]	Peer Review Assessment	Peer Review Assessment Basis	Impact on RI-ISI
IE-A5 (IE-A4)	Not Met	The SR, as clarified by RG 1.200, requires that an evaluation of the potential for each system be performed. While some systems have been evaluated, as documented in Section 2, there is no evidence that each system at CPS has been evaluated. Also, the basis for excluding loss of electrical area ventilation is not supported with room heat-up calculations.	No impact on RI-ISI conclusions. The scope of support system initiating events modeled in the CPS PRA includes the typical set of systems as found in most BWR PRAs. The CPS PRA explicitly includes sixteen (16) support system initiating events. However, the number and types of support system initiators in the PRA is not a critical aspect of RI-ISI risk calculations. In RI-ISI risk calculations a single representative initiator is used in the quantification for each piping segment analyzed and all others are sent to FALSE.
IE-A6 (IE-A4)	Not Met	No systematic evaluation of multiple equipment failures, including common cause and routine system alignments, was evident in the documentation.	No impact on RI-ISI conclusions. Refer to response above for SR IE-A5 (i.e., both IE-A5 and IE-A6 relate to the processes used to identify support system initiators).
AS-B3 (AS-B3)	Not Met	Nearly all event trees model success of emergency core cooling system (ECCS) pump operation following a loss of suppression pool cooling if containment venting is successful. The basis for operation of ECCS pumps is given as Section 6.3.1.1.3 of the USAR which states that the ECCS pumps are designed to	No impact on RI-ISI conclusions. The bases for ECCS pump failure/success following successful containment venting are indeed documented in the CPS PRA, in sub-section "Successful RPV Injection and Successful Vent" in the Event Tree Notebook and the failure probabilities of the associated ECCS failure modes (e.g., basic event 1SY--

SR ID[(1),(2)]	Peer Review Assessment	Peer Review Assessment Basis	Impact on RI-ISI
AS-B3 (AS-B3) (Continued)		operate at saturation with a suppression pool temperature of 212 deg F. However, containment venting is performed to maintain containment pressure less than 45 psig which correlates to a saturation temperature of about 250 deg F. No evaluation of the ability of ECCS pumps to operate at post-containment-venting temperatures was provided. If ECCS pump operation for such conditions cannot be supported, then additional core damage sequences could result. An evaluation of the effects of conditions created by a break outside containment on equipment operation is not documented. Breaks outside containment and ISLOCA events require long-term injection (function XT-CRD) to be successful after an initial period of operation by HPCS or LPCS. However, the CRD model credits operation of condensate transfer as a suction source for CRD and condensate transfer could be failed by the conditions created by the BOC or ISLOCA initiators. Also, because the containment does not have a hard-pipe vent, failure of the HVAC ducting could result in conditions that would cause equipment failures.	STEAMBOUND-, "Vent Causes Steam Binding in ECCS Suction") are further discussed in Appendix B.13 of the Component Data Notebook. ISLOCA and break outside containment (BOC) are accidents that are important to RI-ISI and play a role in determining impact on risk. The operation of ECCS during these conditions is documented in the Event Tree and Component Data notebooks and is sufficient for RI-ISI analyses. Breaks outside containment are expected to occur in containment (which contains little equipment modeled in the PRA) or in the Auxiliary Building. (Note; The generic term Break Outside Containment can also mean break outside the drywell, which is inside the CPS Mark III containment). The Makeup Condensate (MC) and Cycled Condensate (CY) pumps are in a separate building (i.e., the Turbine Building basement). A control rod drive (CRD) pump is normally running, and located in the Turbine Building. The RI-ISI scenario development includes consideration of impact on equipment surrounding the pipe break when choosing initiating events and hardware basic events to represent the scenario. This provides further confirmation that appropriate impacted equipment has been considered.

SR ID[(1),(2)]	Peer Review Assessment	Peer Review Assessment Basis	Impact on RI-ISI
SY-A22 (SY-A20)	Not Met	No calculations supporting room cooling with temporary ventilation are documented. Better documentation of analysis to demonstrate that rated or design capabilities are not exceeded is needed within the system notebooks.	No impact on RI-ISI conclusions. The CPS PRA already makes appropriate assumptions regarding the need for room cooling and explicitly models room cooling in certain areas. The existing modeling provides representation of key room cooling dependencies such that the overall risk characterization is adequate. Furthermore none of the piping in support of Room Cooling functions is in the scope of the RI-ISI program.

SR ID[(1),(2)]	Peer Review Assessment	Peer Review Assessment Basis	Impact on RI-ISI
HR-H3 (HR-H3)	Not Met	Dependent human error probabilities (HEPs) have not been evaluated correctly. Rather than replacing groups of HEPs with a single assumed value and HEP in the post processing recovery file, a dependency analysis should be performed based on BHEP timing. The CPS HRA documentation claims that all operator recovery actions are included directly in the fault trees and event trees and that no recovery actions were placed in the post processing recovery file. If so, then the dependent operator recovery HEPs are incorrectly evaluated.	No impact on RI-ISI conclusions. This finding appears to be a misunderstanding of the CPS dependent HEP analysis and a reviewer preference for the EPRI CAFTA "RECOVER" function instead of the "REPLACE" function used in the CPS PRA (either approach is common and acceptable in the PRA industry). An HEP dependency analysis was performed for the CPS PRA (and numerous dependent HEPs are explicitly incorporated into the PRA quantification) and is documented in the CPS PRA HRA Notebook. The CPS PRA HRA does incorporate both methods (i.e., direct incorporation of dependent HEPs directly into fault tree logic, and use of recovery file) as appropriate. The incorporation of the dependent HEPs into the quantification process is discussed in Section 5.3 of the HRA Notebook, which states: "*The treatment of dependencies in the CPS model is performed in a number of ways. The principal ways are:* • *Explicit modeling of dependencies directly in the fault trees* • *Direct modeling of HEPs that have high conditional failure probabilities without the use of QRECOVER* • *Use of the CAFTA Utility, QRECOVER, to substitute a dependent HEP for combinations of HEPs appearing in cutsets*"

SR ID(1),(2)	Peer Review Assessment	Peer Review Assessment Basis	Impact on RI-ISI
DA-B1 (DA-B1)	Met (CC I)	Data is grouped by mission type and by system, as documented in Appendix A and C of the Component Data Notebook (CPS-PSA-010, Rev. 2). However, it is hard to follow how specific Type Codes are grouped to match basic event updates between Tables in App. C and Tables in App. E.	No impact on RI-ISI conclusions. RI-ISI is a "risk ranking" application, and Capability Category (CC) I is generally sufficient for RI-ISI. Different postulated approaches to grouping components in data analysis would not impact the RI-ISI conclusions.
QU-B2 (QU-B2)	Not Met	The truncation study shown in Section 3.1 of CPS-PSA-013 shows a 20% change in CDF from a truncation value of 1.0E-11 (used for the CPS PRA) to 1.0E-012. The requirement of this SR is to use a truncation value that will not eliminate dependencies of significant cutsets or accident sequences. Since the definition of "significant" given in the PRA standard is the top 95% of cutsets (or accident sequences), the "significant" cutsets will change by increasing CDF by 20%. No basis for why the truncation value of 1.0E-11 maintains the dependencies of significant cutsets was identified in the documentation. Therefore, this SR is considered not met.	No impact on RI-ISI conclusions. Many of the calculations are CCDP/CLERP calculations use an initiating event frequency of 1.0 and truncation value of 1.00E-10. For initiators like small LOCA, break outside containment or large LOCA this is equivalent to using the base initiating event frequency and a truncation of 1.00E-12 or E-13. The EPRI methodology binning process used to determining the High, Medium and Low ranking are separated by decades. Quantification results impacts due to lower truncation levels would have little effect on RI-ISI ranking results. As part of this RAI response, a sensitivity using the LERF risk metric was performed. The re-quantification of the LERF risk metric for all CPS RI-ISI cases at a quantification truncation level of 1.00E-12/yr resulted in no change in the PRA rankings provided in the RI-ISI assessment.

SR ID(1),(2)	Peer Review Assessment	Peer Review Assessment Basis	Impact on RI-ISI
QU-B3 (QU-B3)	Not Met	As described in the PRA standard, convergence can be considered sufficient when successive reductions in truncation value of one decade result in decreasing changes in CDF or LERF, and the final change is less than 5%. The truncation study in Section 3.1.2 of CPS-PSA-013 clearly demonstrates that this convergence has not occurred. For example, in Table 3.1-4 of CPS-PSA-013, there is a 20.5% difference in CDF between 1E-11 and 1E-12 truncation limits. Similarly, convergence of LERF was not demonstrated with a 29% increase from a truncation of 1E-11 to 1E-12.	No impact on RI-ISI conclusions. Refer to response above for SR QU-B2.
QU-D4 (QU-D4)	Met (CC I)	Section 4.5 of CPS-PSA-013 provides a brief comparison of the CPS Level 1 CDF results with the LaSalle 2003A model. No other comparisons were performed. Because the standard specifies that a comparison with multiple plants is required and only a brief comparison to one plant was performed, this SR is considered unmet.	No impact on RI-ISI conclusions. RI-ISI is a "risk ranking" application, and CC I is generally sufficient for RI-ISI. Documented comparisons of the base PRA results with other plants have no direct relationship to RI-ISI calculations.

Table 4 Notes:

(1) The results of the recent CPS PRA peer review are summarized with respect to the key Supporting Requirements applicable to the MSPI program, as outlined in NEI 99-02 Appendix G.

(2) The Supporting Requirement ID shown in parentheses is the ID from NEI 99-02; the associated ID from the current combined ANS/ASME PRA Standard is shown without parentheses.

[Requests Associated With] I3R-05

1. ***Please provide component drawings of the Class 2 High Pressure Core Spray, Low Pressure Core Spray, and Residual Heat Removal Pumps which identify the pump casing welds subject to the surface examination requirement of Table IWC-2500-1, Category C-G.***

   EGC Response

   As shown in Figure 1 below, the majority of the welds associated with the High Pressure Core Spray, Low Pressure Core Spray, and Residual Heat Removal Pumps are located below the dashed line shown in Figure 1 and encased in concrete. The welds on the accessible portions of the pumps as shown in Figures 2, 3, and 4, will continue to be examined according to the Code.

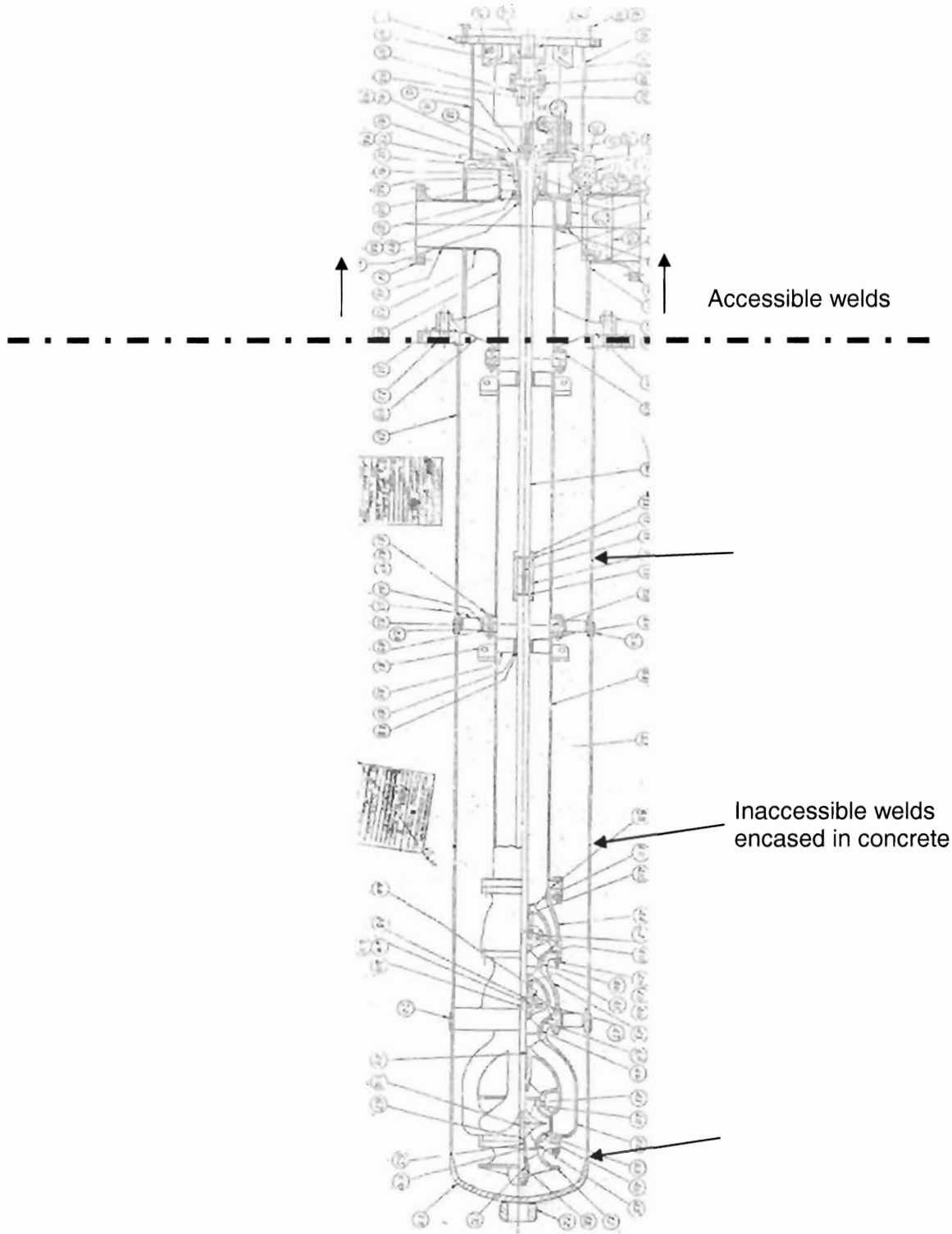

Figure 1: Typical Pump Drawing for the CPS High Pressure Core Spray, Low Pressure Core Spray, and Residual Heat Removal Pumps Showing Accessible and Inaccessible Welds

WELD I.D.
CROSS REFERENCE

PSI I.D.	MFG'S I.D.
1	DH-1
2	DH-5
3	DH-2
4	DH-6
5	DH-4
6	DH-3
7	DH-7

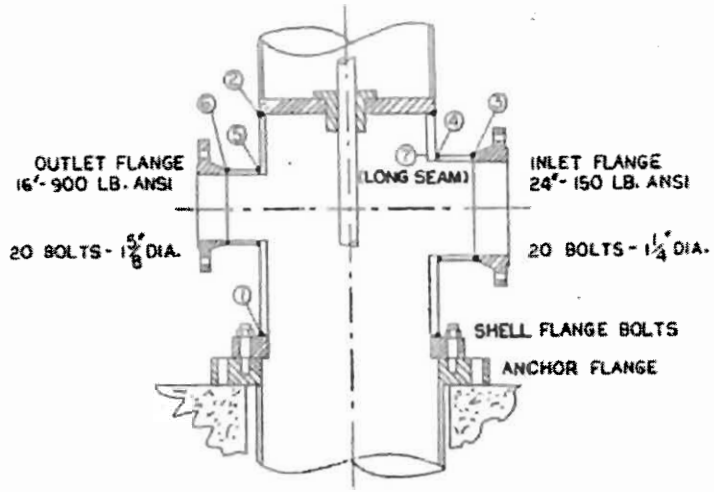

Figure 2: Drawing of the CPS High Pressure Core Spray Pump Showing Accessible Welds

WELD I.D.
CROSS REFERENCE

PSI I.D.	MFG'S I.D.
1	DH-1
2	DH-5
3	DH-2
4	DH-6
5	DH-4
6	DH-3
7	DH-7

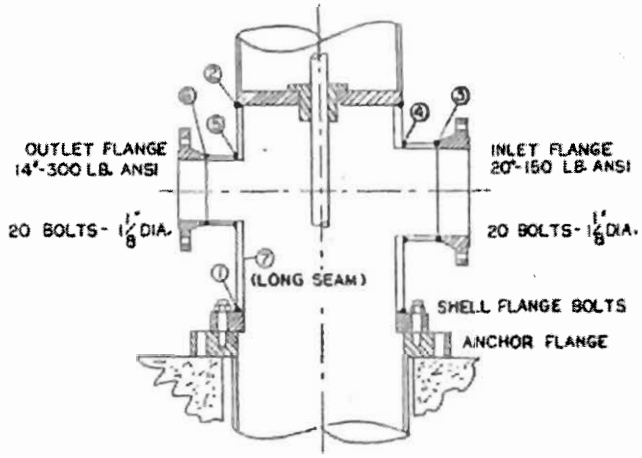

Figure 3: Drawing of the CPS Low Pressure Core Spray Pump Showing Accessible Welds

WELD I.D.
CROSS REFERENCE

PSI I.D.	MFG'S I.D.
1	DH-1
2	DH-5
3	DH-2
4	DH-6
5	DH-4
6	DH-3
7	DH-7

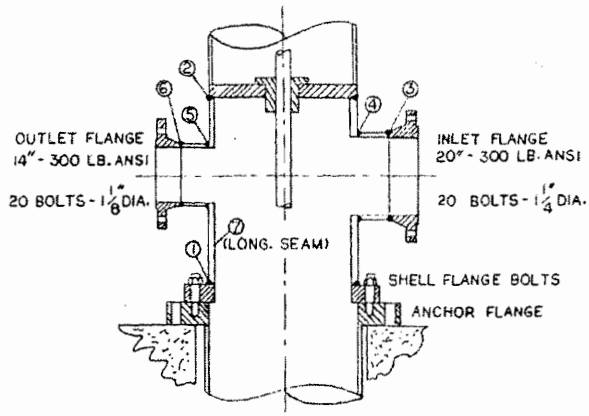

Figure 4: Drawing of the CPS Residual Heat Removal Pump Showing Accessible Welds

2. ***Please identify the start date and currently scheduled end date for the third 10-year ISI interval at CPS.***

EGC Response

The third 10-year ISI interval at CPS started on July 1, 2010, and is scheduled to end on June 30, 2020.

Table 1: Clinton Power Station (CPS) Risk-Informed Inservice Inspection (RI-ISI) System List

System Description
Main Steam (PMS)
Reactor Core Isolation Cooling (PRI)
Feedwater (PFW)
Reactor Recirculation (PRR)
Low Pressure Core Spray (PLP)
High Pressure Core Spray (PHP)
Nuclear Boiler (PNB)
Reactor Water Cleanup (PRT)
Residual Heat Removal (PRH)
Scram Discharge Volume (PSD)
Standby Liquid Control (PSC)
Reactor Pressure Vessel (AAI, AAP)

NOTE: This table shows the systems containing ISI Class 1 or 2 Examination Category B-F, B-J, C-F-1, or C-F-2 welds as well as Break Exclusion Region (BER) welds.

Table 2: Failure Potential Assessment Summary for CPS[2]

	Thermal Fatigue		Stress Corrosion Cracking				Localized Corrosion			Flow Sensitive	
System	**TASCS**	**TT**	**IGSCC**	**TGSCC**	**ECSCC**	**PWSCC**	**MIC**	**PIT**	**CC**	**E-C**	**FAC**
AAI[1]	X	X	X								X
AAP	X	X							X		
PFW	X	X									X
PHP	X										
PLP	X										
PMS											
PRH	X	X	X							X	X
PRI	X	X									
PRR			X								
PRT			X								X
PSC											
PSD											

NOTES:
1. Includes nuclear boiler (PNB).
2. This table shows the assessed failure mechanisms for each system. The RISI program addresses the cumulative impact of all mechanisms that were identified in each system.

TASCS – thermal stratification, cycling and stripping, **TT** – thermal transients, **IGSCC** – intergranular stress corrosion cracking, **TGSCC** – transgranular stress corrosion cracking, **ECSCC** – external chloride stress corrosion cracking, **PWSCC** – primary water stress corrosion cracking, **MIC** – microbiologically influenced corrosion, **PIT** – pitting, **CC** – crevice corrosion, **E-C** – erosion-cavitation, **FAC** – flow accelerated corrosion

Table 3: Number of Elements (i.e., welds) by Risk Category for CPS[2]

System	High Risk			Medium Risk		Low Risk	TOTAL
	Category 1	Category 2	Category 3	Category 4	Category 5	Category 6 or 7	All Categories
AAI[1]			9			2	11
AAP					1	3	4
PFW			67		4		71
PHP		5		8		114	127
PLP		2		3	3	90	98
PMS				4		82	86
PRH		13	68	80	12	525	698
PRI		1		1	64	151	217
PRR		16		133		20	169
PRT	95	8			2		105
PSC				12		82	94
PSD						44	44
Total	95	45	144	241	86	1113	1724

NOTES:

1. Includes nuclear boiler (PNB).
2. This table shows the results of the Risk Categorization for CPS. The risk categories are defined in Figure 3-4 of EPRI TR-112657.

Table 4: Number of Inspections by Risk Category for CPS[2, 3, 4]

	High Risk						Medium Risk				Low Risk		All Risk Categories	
	Category 1		Category 2		Category 3		Category 4		Category 5		Category 6 or 7			
System	Pre-RISI	RISI	Pre-RISI	RISI	Pre-RISI	RISI	Pre-RISI	RISI	Pre-RISI	RISI	Pre-RISI	RISI	Pre-RISI	RISI
AAI[1]											2	0	2	0
AAP									1	1	0	0	1	1
PFW					16	20			4	2			20	22
PHP			2	2			1	1			21	0	24	3
PLP			2	2			2	2	0	1	18	0	22	5
PMS							4	1			17	0	21	1
PRH			2	3	3	9	11	8	12	8	83	0	111	28
PRI			1	1			1	1	64	7	11	0	77	9
PRR							44	15					44	15
PRT													0	0
PSC							0	2					0	2
PSD											4	0	4	0
Total	0	0	7	8	19	29	63	30	81	19	156	0	326	86

NOTES:

1. Includes nuclear boiler (PNB).
2. This table provides a comparison of the RISI element selection to the previous Second Interval's 1989 ASME Section XI and BER programs (Pre-RISI).
3. This table includes the number of welds previously selected for ASME Section XI and BER (Pre-RISI) that are now addressed by the RI-ISI program, but excludes those selections that now default to the augmented programs for IGSCC and FAC.

Exelon

Risk Informed Inservice Inspection Evaluation

FINAL REPORT

REVISION 3

May 2010

Clinton Power Station

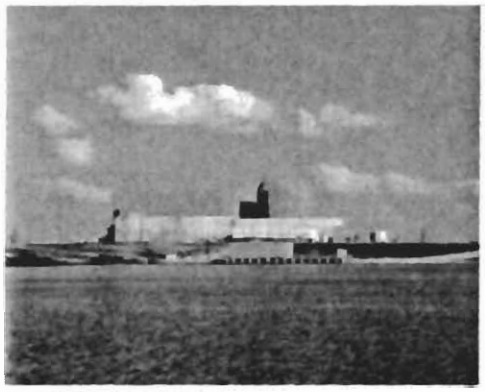

Unit 1

ERIN

Table 7-8

Impact of RISI and No Inspections on CDF and LERF Due to Pipe Ruptures for Clinton Systems

System	System CDF Events/Reactor-Year			Δ CDF Events/Reactor-Year			Δ LERF Events/Reactor-Year		
	Pre-RISI	RISI	No Inspection	RISI	No Inspection	Acceptance Criterion	RISI	No Inspection	Acceptance Criterion
AAI	1.10E-10	2.52E-10	2.52E-10	1.41E-10	1.41E-10	1.00E-07	1.07E-11	1.07E-11	1.00E-08
AAP	3.17E-10	3.06E-10	3.68E-10	-1.07E-11	5.16E-11	1.00E-07	-9.05E-13	4.37E-12	1.00E-08
PFW	1.19E-08	1.08E-08	1.38E-08	-1.08E-09	1.89E-09	1.00E-07	-6.64E-11	1.82E-10	1.00E-08
PHP	7.48E-10	7.21E-10	1.23E-09	-2.64E-11	4.85E-10	1.00E-07	-6.47E-12	3.45E-11	1.00E-08
PLP	8.75E-10	7.86E-10	1.72E-09	-8.91E-11	8.49E-10	1.00E-07	-7.17E-12	3.47E-11	1.00E-08
PMS	2.31E-09	2.79E-09	2.80E-09	4.79E-10	4.93E-10	1.00E-07	7.36E-11	8.71E-11	1.00E-08
PNB	4.32E-11	5.31E-11	5.31E-11	9.96E-12	9.96E-12	1.00E-07	7.11E-13	7.11E-13	1.00E-08
PRH	1.07E-08	1.03E-08	1.25E-08	-4.63E-10	1.73E-09	1.00E-07	-1.49E-11	1.08E-10	1.00E-08
PRI	3.22E-10	3.80E-10	4.42E-10	5.75E-11	1.19E-10	1.00E-07	7.58E-13	5.52E-11	1.00E-08
PRR	1.54E-08	1.86E-08	1.96E-08	3.18E-09	4.24E-09	1.00E-07	2.41E-10	3.21E-10	1.00E-08
PRT	1.00E-08	1.12E-08	1.12E-08	1.24E-09	1.24E-09	1.00E-07	5.51E-10	5.51E-10	1.00E-08
PSC	3.26E-09	3.06E-09	3.26E-09	-1.94E-10	0.00E+00	1.00E-07	-5.83E-12	0.00E+00	1.00E-08
PSD	1.00E-14	1.00E-14	1.00E-14	1.00E-14	1.00E-14	1.00E-07	1.00E-14	1.00E-14	1.00E-08
Total	5.60E-08	5.92E-08	6.72E-08	3.25E-09	1.13E-08	1.00E-06	7.76E-10	1.39E-09	1.00E-07

Table 5: Impact of RISI and No Inspections on CDF and LERF Due to Pipe Ruptures for CPS Systems

System	System CDF Events/Reactor-Year			Δ CDF Events/Reactor-Year			Δ LERF Events/Reactor-Year		
	Pre-RISI	RISI	No Inspection	RISI	No Inspection	Acceptance Criterion	RISI	No Inspection	Acceptance Criterion
AAI	1.10E-10	2.52E-10	2.52E-10	1.41E-10	1.41E-10	1.00E-07	1.07E-11	1.07E-11	1.00E-08
AAP	3.17E-10	3.06E-10	3.68E-10	-1.07E-11	5.16E-11	1.00E-07	-9.05E-13	4.37E-12	1.00E-08
PFW	1.19E-08	1.08E-08	1.38E-08	-1.08E-09	1.89E-09	1.00E-07	-6.64E-11	1.82E-10	1.00E-08
PHP	7.48E-10	7.21E-10	1.23E-09	-2.64E-11	4.85E-10	1.00E-07	-6.47E-12	3.45E-11	1.00E-08
PLP	8.75E-10	7.86E-10	1.72E-09	-8.91E-11	8.49E-10	1.00E-07	-7.17E-12	3.47E-11	1.00E-08
PMS	2.31E-09	2.79E-09	2.80E-09	4.79E-10	4.93E-10	1.00E-07	7.36E-11	8.71E-11	1.00E-08
PNB	4.32E-11	5.31E-11	5.31E-11	9.96E-12	9.96E-12	1.00E-07	7.11E-13	7.11E-13	1.00E-08
PRH	1.07E-08	1.03E-08	1.25E-08	-4.63E-10	1.73E-09	1.00E-07	-1.49E-11	1.08E-10	1.00E-08
PRI	3.22E-10	3.80E-10	4.42E-10	5.75E-11	1.19E-10	1.00E-07	7.58E-13	5.52E-11	1.00E-08
PRR	1.54E-08	1.86E-08	1.96E-08	3.18E-09	4.24E-09	1.00E-07	2.41E-10	3.21E-10	1.00E-08
PRT	1.00E-08	1.12E-08	1.12E-08	1.24E-09	1.24E-09	1.00E-07	5.51E-10	5.51E-10	1.00E-08
PSC	3.26E-09	3.06E-09	3.26E-09	-1.94E-10	0.00E+00	1.00E-07	-5.83E-12	0.00E+00	1.00E-08
PSD	1.00E-14	1.00E-14	1.00E-14	1.00E-14	1.00E-14	1.00E-07	1.00E-14	1.00E-14	1.00E-08
Total	**5.60E-08**	**5.92E-08**	**6.72E-08**	**3.25E-09**	**1.13E-08**	**1.00E-06**	**7.76E-10**	**1.39E-09**	**1.00E-07**

Table 6: Impact of RISI and No Inspections on CDF and LERF Due to BER Pipe Ruptures for CPS Systems

System	System CDF			Δ CDF			Δ LERF		
	Pre-RISI	RISI	No Inspection	RISI	No Inspection	Acceptance Criterion	RISI	No Inspection	Acceptance Criterion
PFW	9.02E-11	1.23E-10	2.07E-10	3.24E-11	1.17E-10	1.00E-07	1.88E-11	4.79E-11	1.00E-08
PHP	4.58E-11	1.02E-10	1.05E-10	5.64E-11	5.88E-11	1.00E-07	1.61E-13	2.53E-12	1.00E-08
PLP	2.59E-10	2.59E-10	5.91E-10	1.52E-13	3.32E-10	1.00E-07	4.55E-14	2.42E-12	1.00E-08
PMS	4.45E-11	8.88E-11	1.02E-10	4.44E-11	5.78E-11	1.00E-07	4.04E-11	5.39E-11	1.00E-08
PRH	9.12E-12	1.62E-11	2.08E-11	7.05E-12	1.17E-11	1.00E-07	2.03E-12	4.42E-12	1.00E-08
PRI	8.94E-11	1.42E-10	2.04E-10	5.29E-11	1.15E-10	1.00E-07	-7.22E-14	5.44E-11	1.00E-08
PRT	5.98E-10	1.38E-09	1.38E-09	7.78E-10	7.78E-10	1.00E-07	5.15E-10	5.15E-10	1.00E-08
Total	**1.14E-09**	**2.11E-09**	**2.61E-09**	**9.71E-10**	**1.47E-09**	**1.00E-06**	**5.77E-10**	**6.81E-10**	**1.00E-07**