ENCLOSURE 1
ATTACHMENT 3

NEXTERA ENERGY POINT BEACH, LLC
POINT BEACH NUCLEAR PLANT, UNITS 1 AND 2

LICENSE AMENDMENT REQUEST 261
EXTENDED POWER UPRATE
RESPONSE TO REQUEST FOR ADDITIONAL INFORMATION

PBNP-994-21-05-P01, REVISION 0, MAIN STEAM PIPING GL 87-11
BREAK LOCATION DETERMINATION

46 pages follow

TABLE OF CONTENTS

1.0 Purpose 5

2.0 Background 5

3.0 Assumptions and Analysis Notes 6

4.0 Methodology and Acceptance Criteria 7

5.0 References 9

6.0 GL 87-11 Break And Leak Location Calculations 10

7.0 Results & Conclusions 11

Attachments

Pages

A. Resultant Stress Calculations Tables A1-A3

B. SK-MS-FIG.1 – Postulated Line Breaks B1

C. Calculation of Local Pipe Stresses at Integral Pipe Attachments C1-C24

D. Calculation of Combined Stresses at Tee Node Point 395 ..... D1-D2

E. Combined Support Loads and Review of Non-Seismic Supports E1-E3

F. AES Technical Position Paper for HELB Program F1-F3

1.0 PURPOSE

The purpose of this calculation is to establish the locations of intermediate high energy large breaks and leakage cracks utilizing the criteria given in Generic Letter 87-11 and its attachment USNRC Mechanical Engineering Branch Technical Position, MEB 3-1, Revision 2 (Reference 3).

Combined stress tables for the Main Steam piping, between the anchors at containment penetrations P-1 and P-2 to HP Turbine Control Valves and to Condensers 1SC-1A and 1SC-1B in the Turbine Building (Reference 6), are developed for the sole purpose of determining the locations of intermediate large breaks and leakage cracks in accordance with the combined stress equations defined in Reference 3.

2.0 BACKGROUND

Point Beach Nuclear Plant's (PBNP) licensing basis for High-Energy Line Break (HELB) is documented in the Final Safety Analysis Report (FSAR) (Reference 2, Appendix A.2). Appendix A.2 of the FSAR defines a high-energy line as a line with design pressure greater than 275 psig and service temperature greater than 200°F. Both conditions have to be satisfied for a line to be designated high-energy. Additional background discussion regarding the BPNP HELB Program and details for establishing HELB break and leakage crack locations criteria (HELB Reconstitution Program) is provided in the AES technical position paper (see Attachment F).

Based on the above high energy line definition, Calculation PBNP-994-21-02 (Reference 8) identifies the Main Steam (MS) System Lines, Main Feedwater Piping, Steam Generator (SG) Blowdown Piping, and Sampling System Lines as high-energy lines (Reference 2, Appendix A.2).

The application of GL 87-11 methods to determine the new intermediate break and leakage crack locations is expected to be beneficial in addressing design concerns related to high energy line break effects. GL 87-11 still requires terminal end circumferential breaks to be postulated irrespective of the combined stress values at these locations.

This calculation determines break and crack locations in the high-energy lines outside containment, based on the combined stress criteria detailed in the GL 87-11 methodology. This calculation does not address the additional postulation of "a single crack, exclusive of stress, at the most severe location with respect to essential equipment" (IE Notice 2000-20, Reference 12), nor does this calculation address the consequences of or evaluate the impacts of breaks or cracks that are required to be postulated based on this criteria.

3.0 ASSUMPTIONS AND ANALYSIS NOTES

Assumptions

Piping material, geometric data and stress analysis (computer results) given in the AOR (Reference 6) for Main Steam piping are used as input to develop the GL 87-11 combined stress tables that, in turn, are used to determine the intermediate break and leakage crack locations.

Analysis Notes

The code of record for this plant is USAS B31.1 Power Piping Code, 1967 Edition (Reference 1). The Main Steam piping stress analysis documented in Reference 6 was performed using ASME B&PV Code, Section III, Subsection NC and ND, 1977 Edition up to and including 1978 Winter Addenda (Reference 13). The use of this piping analysis Code is documented as acceptable in the Pipe Code Reconciliation Study performed by Impell (see Section 5.1.1 of Reference 10).

Application of the MEB 3.1, Rev. 2 methodology for Class 2 and 3 piping requires combined stresses to be calculated in accordance with the 1986 ASME Section III, Class 2 requirements (Reference 4). As such, for consistency with the GL 87-11 criteria, additional computer analysis based on the 1986 ASME Section III Edition was performed (Reference 6). Stress results obtained from this analysis can be directly used and compared to the threshold limits as discussed in Section 4.0.

The piping between containment penetrations P-1 and P-2 and valves 1MS-2017A and 1MS-2018A respectively was evaluated as seismic category I piping (Reference 6). The piping downstream of the valves is non-seismic, however, two supports in each direction past the seismic category I piping were evaluated as seismic category I supports. This was done to obtain the effect of the non-seismic portion on the seismic category I piping. In order to apply the GL 87-11 criteria to the non-seismic region pipe stresses, it is necessary to show that the non-seismic supports can withstand the effects of the Operational Basis Earthquake (OBE). Therefore, the non-seismic supports are reviewed in Attachment E and shown to conform to Section 5.8 of DG-M09 (Reference 10).

The pipe stress analysis (Reference 6) calculated combined stresses at 30" tee Node Point 395 that were found to be slightly over the threshold limit for large break. Attachment D of the calculation removed some of the conservatism in the combined stresses by following ASME Section III Code, 1986 Edition and replacing the pressure portion of Equation 9 by the expression provided in Section NC-3651 (a).

4.0 METHODOLOGY AND ACCEPTANCE CRITERIA

This calculation uses the GL 87-11 (Reference 3) methodology to determine postulated pipe break and crack locations. The analysis in Reference 6 was performed using ASME B &PV Code, Section III, Subsection NC and ND, 1977 Edition up to and including 1978 Winter Addenda (Reference 13) as the piping code consistent with DG-G09 (Reference 10). For consistency with the GL 87-11 criteria and MEB 3-1, additional computer analysis based on the 1986 ASME Section III was performed (Reference 6). All stress components for the ASME Section III stress combination are obtained from the 1986 ASME Section III analysis.

The following is a discussion of the high-energy line break criteria used to establish the break locations using the GL 87-11 methodology.

4.1 Intermediate Large Breaks

The GL 87-11 and MEB 3-1, Revision 2 criteria (Reference 3) for intermediate large breaks is based on the combined stress formula given by the sum of Equations 9 and 10 of ASME B&PV Code Section III, Class 2 and 3 as follows:

$$B_1 PD_0/2t + B_2 M_{DW}/Z + B_2 M_{OBE}/Z + i M_{TH}/Z \geq 0.8 (1.8 S_h + S_A) \qquad (1)$$

In above equation, the first term is the longitudinal pressure stress. The second and third terms represent the stresses due to deadweight and OBE loads cases respectively. The fourth term is the thermal expansion stress. A stress table which summarizes all Node Points that exceed the threshold limit for breaks and cracks was developed and is provided in Attachment A. Based on the results from the pipe stress analysis (Reference 6), stresses are shown for Equation 9 (Level B) and Equation 10. Local stresses due to IWA's are also included and combined as applicable. The combined stresses are compared to the threshold limits for cracks and breaks.

Where:

P	= Design internal pressure, psi
D_0	= Outside diameter of the pipe, in
t	= Nominal thickness of the pipe, in
M_{DW}	= Resultant moment due to dead weight, in-lbs
M_{OBE}	= Resultant moment due to operating basis earthquake, in-lbs
M_{TH}	= Resultant moment due to thermal expansion, in-lbs
S_h	= Material allowable stress at temperature, psi
S_A	= Material allowable stress range, psi
Z	= Section modulus of pipe, in^3
i	= stress intensification factor, as given in Figure NC-3673.2(b)-1
B_1	= primary stress index for pressure stress as given in Table NB-3681(a)-1
B_2	= primary stress index for bending stresses as given in Table NB-3681(a)-1

Large intermediate breaks are to be postulated only in locations where the combined stress exceeds the threshold value of $0.8(1.8S_h + S_A)$ (Reference 3). The requirements for arbitrary intermediate large breaks are eliminated by Reference 3.

4.2 Circumferential Breaks at Terminal Ends of Main and Branch Lines

Terminal Ends

The GL 87-11 criteria state that circumferential breaks have to be postulated at terminal ends of the main run as well as the branch piping. Terminal ends of a piping run are defined as the ends terminating at components, or at other piping (run pipe), or at intermediate anchors. Footnote 3 of MEB 3-1, Rev. 2 provides a definition for the term "terminal ends" which was missing in the Giambusso letter (Reference 5). The footnote defines terminal ends as "Extremities of piping runs that connect to structures, components (e.g., vessels, pumps, valves), or pipe anchors that act as rigid constraints to the piping motion and thermal expansion. A branch connection to a main piping run is a terminal end of the branch run, except where the branch run is classified as part of the main run and is shown to have a significant effect on the main run behavior..."

Terminal ends for the Main Steam piping are summarized on Table 7.1 (Section 7.0).

Branch Lines

All branch lines to the Main Steam piping, except the 3" Main Steam piping to anchor EB-8-A119, the 3" Main Steam piping to anchor EB-8-A120, and the Main Steam piping to Auxiliary Feedwater Pump 1-P29, have been stress analyzed in Reference 6 along with the Main Steam header piping in a single computer model. The effects of the branch on the main run and vice versa have been automatically included in the overall stress analysis of the MS piping. Therefore, based on the Reference 3 criteria, branch points along the main run need not be considered as terminal ends of the branch line for the purpose of postulating a circumferential large break at these locations if the combined stresses at these locations do not exceed the large break threshold criterion.

4.3 High-Energy Line Leakage Cracks (Small Breaks)

The GL 87-11 and MEB 3-1, Revision 2 criterion for leakage cracks is based on the same combined stress formula given in equation (1) above, except the threshold stress value on the right side of the equation is reduced by one-half as follows:

$$B_1 PD_0/2t + B_2 M_{DW}/Z + B_2 M_{OBE}/Z + i\, M_{TH}/Z \geq 0.4\,(1.8\, S_h + S_A) \qquad (2)$$

Leakage cracks are to be postulated in locations where the combined stress exceeds the threshold value of $0.4(1.8S_h + S_A)$.

5.0 REFERENCES

1. USAS B31.1.0, Power Piping Code, 1967 Edition.
2. PBNP FSAR, Appendix A.2, High Energy Pipe Failure Outside Containment.
3. *Generic Letter 87-11 – Relaxation in Arbitrary Intermediate Pipe Rupture Requirements*, June 19, 1987
4. ASME Section III B&PV Code, Subsection NC and ND, 1986 Edition.
5. AEC-DOLs Letter to WPS of December 15, 1972 (Mr. Giambusso to Mr. James).
6. Shaw Calculation No. 129187-P-0008, Rev. 0A, "Point Beach Unit 1- Main Steam Outside Containment – Piping Qualification for Extended Power Uprate Conditions".
7. PBNP Accession No. WE100107, Piping System Qualification Report for Main Steam Outside Containment to HP Turbine Control Valves, Unit 1 Rev. 0, including Addenda A through D.
8. Calculation No. PBNP-994-21-02, HELB Reconstitution Program-Task 2, High Energy System Selection, Rev. 0.
9. Not Used.
10. DG-M09, Rev. 2, Design Requirements for Piping Stress Analysis.
11. Drawing M–201 Sh. 1, Revision 54, Piping Subsystems P&ID – Main & Reheat Steam System.
12. NRC Information Notice 2000-20, Potential Loss of Redundant Safety Related Equipment Because of the Lack of High Energy Line Break Barriers, 12/11/2000.
13. ASME Section III B&PV Code, Subsection NC and ND, 1977 Edition up to and including 1978 Winter Addenda.
14. Isometric Drawing: P-107 Revision 12, "Main Steam Outside Containment To H.P. Turbine Control Valves and to Condenser 30, 24 EB-1, 24, 18, 16 EB-2 & 10HB-12".
15. ASME Code Case N-318-5, "Procedure for Evaluation of the Design of Rectangular Cross Section Attachments on Class 2 & 3 Piping," 4/28/94.
16. ASME Code Case N-392-1, "Procedure for Evaluation of the Design of Hollow Circular Cross Section Welded Attachments on Class 2 & 3 Piping," 12/11/89.
17. "Stresses in Elbows Created by Supported Lug Load," T. K. Emera and E. C. Rossow, 1979 PVP Spring Conference 79-PVP-51.

6.0 GL 87-11 BREAK AND LEAK LOCATION CALCULATIONS

As discussed in Section 4.0, the threshold stress limits used by GL 87-11 are determined in accordance with the requirements of ASME Section III Code, for Class 2 and 3 piping. This Section provides additional information on the GL 87-11 method to determine postulated break and crack locations.

6.1 Application of GL 87-11 Criteria

The requirements of GL 87-11 (Reference 3) are applied to the Main Steam piping from containment penetrations P-1 and P-2 to H.P. turbine control valves and condensers 1SC-1A and 1SC-1B. There are no intermediate anchors between the containment penetration anchors at Nodes 5 & 7010 and the Turbine Control Valves at Nodes 240 & 380.

A stress table which summarizes all Node Points that exceed the threshold limit for breaks and cracks was developed taking piping stress data from Reference 6 computer analyses. The stress table is provided in Attachment A. Based on the results from the pipe stress analysis (Reference 6), stresses are shown for Equation 9 (Level B) and Equation 10. Local stresses due to IWA's are also included and combined as applicable. This information was then used to calculate the combined stress value for comparison to threshold values established per equations (1) and (2) that were defined in Section 4.0.

6.2 Calculation of Local Pipe Stresses due to IWA's

The localized stresses developed on the pipe due to integral welded attachments (IWA) are calculated in Attachment C and are superimposed on the pipe stresses calculated by the computer analysis. As discussed in the pipe stress analysis guidelines DG-M09 (Reference 10) the specific methodology used to calculate IWA stresses uses as a guide the applicable Code Cases (such as N-318 and 392), Welding Research Council Bulletins or Finite Element Analysis as appropriate.

The IWA calculations are not intended to evaluate the IWA's or the weld between the IWA and the pipe, but rather calculate the local stresses for use in evaluating HELB point locations in accordance with Section 4.0 of this calculation. The local stresses are added to the piping system stresses to obtain the combined stresses and compare them to the threshold stress limits (see pipe stress table in Attachment A).

7.0 RESULTS & CONCLUSIONS

Results

The Main Steam lines between the containment penetration anchors P-1 and P-2 and the H.P. Turbine Control Valves and Condensers 1SC-1A & 1SC-1B including branch lines (Ref. 6) have been evaluated for break and crack locations following the requirements and criteria of Generic Letter GL 87-11.

Large Breaks

Terminal end circumferential breaks are to be postulated at the terminal ends of the main steam lines at the penetration anchors inside containment and at the H.P. Turbine Control Valves. The terminal ends of the 6" lines to Condensers 1SC-1A & 1SC-1B also require large breaks to be postulated. Locations where large breaks are required to be postulated are summarized in Table 7.1 below.

As seen from the stress tables in Attachment A, there is a single location where the combined stresses exceed the Intermediate Large Break Limits, and as such, this location requires large break to be postulated. This location is also summarized in Table 7.1 below.

Table 7.1 – Postulated Large Breaks at Terminal Ends and Intermediate Locations

Break Location	Node Point	Notes
30" MS header at Containment Penetrations P-1& P-2	7010, 5	Terminal Ends
Turbine Stop Valves	240, 380	Terminal Ends
8" & 6" branch lines from MS relief header (from 1HX-1A)	7070,8000, 8030,8060, 9055	Terminal Ends
8" & 6" branch lines from MS relief header (from 1HX-1B)	25016,25017, 25018,25019, 23020	Terminal Ends
Inlet side of control valves to condenser 1SC-1A	630,725,825, 925	Terminal Ends
Inlet side of control valves to condenser 1SC-1B	2070,3065, 4070,5065	Terminal Ends
3" MS to Auxiliary FW Pumps	16,7018	Terminal Ends
6" Elbow upstream of control valve 1MS-2057	920	Intermediate Break

All postulated large breaks at terminal ends and intermediate locations are shown on Drawing No. SK-MS-FIG. 1 (Attachment B)

Leakage Cracks (Small Breaks)

Leakage cracks need to be postulated at locations where the combined stress exceeds the threshold limits as shown in the stress table (Attachment A). Locations where leakage cracks are required to be postulated are summarized in Table 7.2 below.

Table 7.2 – Leakage Crack (Small Break) Locations Main Steam Lines

Crack Location	Node Point	Notes
30" Pipe riser at supports EB-1-H3 & EB-1-H15	120,6010	
30"x24" eccentric reducers	155,305	
Outlet of check valve 1MS-2017A	140	
24" Elbow north of 24" Tee	290	
24"x18" eccentric reducer	437	
6" Elbow (2nd elbow upstream of 1MS-2054)	600	
6" Elbows (3 elbows upstream of 1MS-2055)	701,702,703,710,720,	
6" Elbow (4th elbow upstream of 1MS-2056)	770	
6" Elbows (2 elbows upstream of 1MS-2056)	802,810,820	
6" Elbows (4 elbows upstream of 1MS-2057)	870,880,890,900,901, 902,903,910,920	
16" Elbow end (1st elbow from 24x16 tee)	1010	
6" Elbow (2nd elbow upstream of 1MS-2050)	2035	
6" Elbows (2 elbows upstream of 1MS-2051)	3025,3030,3045	
6" Elbow (2nd elbow upstream of 1MS-2052)	4030,4035,4040	
6" Elbow (2 elbows upstream of 1MS-2053)	5030,5035,5040,5045 5055	
6"x3/4" branch conn. upstream of control valves	628,722,823,922,2068, 3062,4068,5062	
6"Pipe upstream of 6"x3/4" branch connection	5060	
30" Pipe riser (at support EB-1-H202)	6002,6001	
Both ends of check valve 1MS-2018A	390,385	
24" Elbow & Pipe by HP Turb. Stop Valve 1MS-2027	375,378	
30" Tees by check valves 1MS-2017A & 1MS-2018A	395,130	
30" Tee near Penetration P-1	7000	
30x30x24 Tees downstream of check valves 1MS-2017A & 1MS-2018A	300,145	
24" Tee	275	
24x24x16 Tee	415	
16x16x6 Tess at 6" lines to Condensers	550,555,557,565,1085, 1090,1095	

Conclusions

An evaluation of the MS lines from containment penetrations P-1 and P-2 to the respective H.P. Turbine Control Valves and Condensers 1SC-1A & 1SC-1B using the GL 87-11 and its associated USNRC Branch Technical Position MEB 3.1, Rev. 2 (Reference 3) is described in this calculation. The calculation shows that:

- No intermediate stress related and arbitrary large breaks are required to be postulated for the Main Steam header piping. An intermediate stress related large break is required to be postulated on the 6" line to condenser 1SC-1A (Node Point 920 just upstream of the terminal point at control valve 1MS-2057).
- Circumferential large breaks are required to be postulated at the terminal ends as shown in Table 7.1.
- Leakage cracks (break size = ½ times the pipe wall thickness x ½ the pipe internal diameter) are required to be postulated at the locations summarized in Table 7.2.

This calculation does not address the postulation of a single crack, exclusive of stress, at the most severe location with respect to essential equipment (IE Notice 2000-20, Reference 12), nor does this calculation address the consequences or evaluate the impacts of breaks or cracks that are required to be postulated based on this criteria.

Stress Table for Main Steam System - Unit 1
MS from Containment Penetration P-1 & P-2 to H.P. Turbine Control Valves and to Condenser
(Based on analysis results from Shaw Group Pipe Analysis, Reference 6)

Input Data from Analysis			Eq. 9B		Eq. 10							
NODES	Outside dia. D_O (in)	Pipe thickness t_n (in)	Pipe Stress psi	IWA Stress psi	Pipe Stress psi	IWA Stress psi	Comb. Stress psi	Limit for Crack	Limit for Break	Ratio = Comb. St. / Crack Limit	Ratio = Comb. St. / Break Limit	COMMENTS
120	30	0.908	10743	7830	1343	7367	27283	19800	39600	1.3779	0.6890	IWA (EB-1-H3)
140	30	0.908	11422		10150		21572	19800	39600	1.0895	0.5447	Valve 1MS-2017A end
150	30	0.908	20774		9033		29807	19800	39600	1.5054	0.7527	30x24 Ecc. Reducer
155	24	0.968	16999		13448		30447	19800	39600	1.5377	0.7689	30x24 Ecc. Reducer
160	24	0.968	16997		13253		30250	19800	39600	1.5278	0.7639	30x24 Ecc. Reducer
240	24	0.968	10306		10550		20856	19800	39600	1.0533	0.5267	HP Turb. Stop Valve
290	24	0.968	9966	12958	10723	0	33647	19800	39600	1.6993	0.8497	24" Elbow, IWA(EB-1-H14)
437	18	0.750	18099		6534		24633	19800	39600	1.2441	0.6220	24x18 Ecc. Reducer
438	18	0.750	17996		6396		24392	19800	39600	1.2319	0.6160	24x18 Ecc. Reducer
560	16	0.656	7364	3200	744	2912	14220	19800	39600	0.7182	0.3591	IWA (EB-2-H9)
600	6.625	0.280	7747	5396	5439	3234	21816	19800	39600	1.1018	0.5509	6" Elbow, IWA(EB-2-H10)
628	6.625	0.280	14895		6943		21838	19800	39600	1.1029	0.5515	6x3/4 Branch Conn.
630	6.625	0.280	15567		7505		23072	19800	39600	1.1653	0.5826	Valve MS-2054 end
701	6.625	0.280	19537		7949		27486	19800	39600	1.3882	0.6941	6" Elbow End
702	6.625	0.280	18985	5396	8077	3234	35692	19800	39600	1.8026	0.9013	6" Elbow, IWA(EB-2-H11)
703	6.625	0.280	18384		7539		25923	19800	39600	1.3092	0.6546	6" Elbow End
710	6.625	0.280	17786		11245		29031	19800	39600	1.4662	0.7331	6" Elbow End
720	6.625	0.280	21781		11743		33524	19800	39600	1.6931	0.8466	6" Elbow End
722	6.625	0.280	13764		9105		22869	19800	39600	1.1550	0.5775	6x3/4 Branch Conn.
725	6.625	0.280	14818		8660		23478	19800	39600	1.1858	0.5929	Valve MS-2055 end
770	6.625	0.280	6025		14487		20512	19800	39600	1.0360	0.5180	6" Elbow End
802	6.625	0.280	10775	5396	6955	3234	26360	19800	39600	1.3313	0.6657	6" Elbow, IWA(EB-2-H12)
810	6.625	0.280	11942		11279		23221	19800	39600	1.1728	0.5864	6" Elbow End
820	6.625	0.280	10734		11634		22368	19800	39600	1.1297	0.5648	6" Elbow End
823	6.625	0.280	15835		5919		21754	19800	39600	1.0987	0.5493	6x3/4 Branch Conn.
825	6.625	0.280	16542		6436		22978	19800	39600	1.1605	0.5803	Valve MS-2056 end
870	6.625	0.280	8557		18992		27549	19800	39600	1.3914	0.6957	6" Elbow End
880	6.625	0.280	6578		16080		22658	19800	39600	1.1443	0.5722	6" Elbow End
890	6.625	0.280	18405		5088		23493	19800	39600	1.1865	0.5933	6" Elbow End
900	6.625	0.280	17794		5033		22827	19800	39600	1.1529	0.5764	6" Elbow End
901	6.625	0.280	16685		7948		24633	19800	39600	1.2441	0.6220	6" Elbow End
902	6.625	0.280	17349	5396	8235	3234	34214	19800	39600	1.7280	0.8640	6" Elbow, IWA(EB-2-H13)
903	6.625	0.280	15792		7516		23308	19800	39600	1.1772	0.5886	6" Elbow End
910	6.625	0.280	22278		14035		36313	19800	39600	1.8340	0.9170	6" Elbow End
920	6.625	0.280	25774		14702		40476	19800	39600	2.0442	**1.0221**	6" Elbow End
922	6.625	0.280	14935		11415		26350	19800	39600	1.3308	0.6654	6x3/4 Branch Conn.
925	6.625	0.280	15837		10892		26729	19800	39600	1.3499	0.6750	Valve 1MS-2057 end
1010	16	0.656	9718		10237		19955	19800	39600	1.0078	0.5039	16" Elbow End
2005	16	0.656	6995	2530	0	1963	11488	19800	39600	0.5802	0.2901	IWA (EB-2-H18)

Stress Table for Main Steam System - Unit 1
MS from Containment Penetration P-1 & P-2 to H.P. Turbine Control Valves and to Condenser
(Based on analysis results from Shaw Group Pipe Analysis, Reference 6)

Input Data from Analysis			Eq. 9B		Eq. 10							
NODES	Outside dia. D_O (in)	Pipe thickness t_n (in)	Pipe Stress psi	IWA Stress psi	Pipe Stress psi	IWA Stress psi	Comb. Stress psi	Limit for Crack	Limit for Break	Ratio = Comb. St. / Crack Limit	Ratio = Comb. St. / Break Limit	COMMENTS
2035	6.625	0.280	12400	3108	6527	1477	23512	19800	39600	1.1875	0.5937	6" Elbow, IWA(EB-2-H19)
2068	6.625	0.280	10825		10675		21500	19800	39600	1.0859	0.5429	6x3/4 Branch Conn.
2070	6.625	0.280	10939		11360		22299	19800	39600	1.1262	0.5631	Valve 1MS-2050 end
3025	6.625	0.280	13210		9287		22497	19800	39600	1.1362	0.5681	6" Elbow End
3030	6.625	0.280	10280	3108	7432	1477	22297	19800	39600	1.1261	0.5631	6" Elbow, IWA(EB-2-H20)
3045	6.625	0.280	15875		6717		22592	19800	39600	1.1410	0.5705	6" Elbow End
3062	6.625	0.280	23746		9155		32901	19800	39600	1.6617	0.8308	6x3/4 Branch Conn.
3065	6.625	0.280	26243		10570		36813	19800	39600	1.8592	0.9296	Valve 1MS-2051 end
4030	6.625	0.280	12467		8005		20472	19800	39600	1.0339	0.5170	6" Elbow End
4035	6.625	0.280	12636	3108	8446	1477	25667	19800	39600	1.2963	0.6482	6" Elbow, IWA(EB-2-H21)
4040	6.625	0.280	11537		8265		19802	19800	39600	1.0001	0.5001	6" Elbow End
4068	6.625	0.280	10107		12850		22957	19800	39600	1.1594	0.5797	6x3/4 Branch Conn.
4070	6.625	0.280	10262		13682		23944	19800	39600	1.2093	0.6046	Valve 1MS-2052 end
5030	6.625	0.280	12438		10259		22697	19800	39600	1.1463	0.5732	6" Elbow End
5035	6.625	0.280	13039	3108	10918	1477	28542	19800	39600	1.4415	0.7208	6" Elbow, IWA(EB-2-H22)
5040	6.625	0.280	13559		10449		24008	19800	39600	1.2125	0.6063	6" Elbow End
5045	6.625	0.280	15717		9348		25065	19800	39600	1.2659	0.6330	6" Elbow End
5055	6.625	0.280	11947		9040		20987	19800	39600	1.0599	0.5300	6" Elbow End
5060	6.625	0.280	15997		4919		20916	19800	39600	1.0564	0.5282	6" Pipe
5062	6.625	0.280	22743		9756		32499	19800	39600	1.6414	0.8207	6x3/4 Branch Conn.
5065	6.625	0.280	25021		11419		36440	19800	39600	1.8404	0.9202	Valve 1MS-2053 end
6010	30	0.908	11030	8253	4185	8584	32052	19800	39600	1.6188	0.8094	IWA (EB-1-H15)
6002	30	0.908	12309		8294		20603	19800	39600	1.0406	0.5203	30" Pipe
6001	30	0.908	12558		9257		21815	19800	39600	1.1018	0.5509	30" Pipe
6000	30	0.908	12576		9691		22267	19800	39600	1.1246	0.5623	30" Pipe
400	30	0.908	12590		9909		22499	19800	39600	1.1363	0.5682	30" Pipe
390	30	0.908	12062		14203		26265	19800	39600	1.3265	0.6633	30" Valve (MS-2018)
385	30	0.908	11506		10389		21895	19800	39600	1.1058	0.5529	30" Valve (MS-2018)
305	30	0.908	21622		8910		30532	19800	39600	1.5420	0.7710	30x24 Ecc. Reducer
310	24	0.968	18034		12947		30981	19800	39600	1.5647	0.7823	30x24 Ecc. Reducer
375	24	0.968	8982		12266		21248	19800	39600	1.0731	0.5366	24" Elbow
378	24	0.968	11030		10964		21994	19800	39600	1.1108	0.5554	24" Pipe
380	24	0.968	12089		12857		24946	19800	39600	1.2599	0.6299	HP Turb. Stop Valve
9921	3.5	0.216	5707	1160	207	314	7388	19800	39600	0.3731	0.1866	IWA (EB-1-H201)
9974	3.5	0.216	5637	1160	200	314	7311	19800	39600	0.3692	0.1846	IWA (EB-1-H200)
7000	30	0.908	22320		1453		23773	19800	39600	1.2007	0.6003	30" Tee
395	30	0.908	See Note				38895	19800	39600	1.9644	0.9822	30" Tee
300	24	0.968	22676		9769		32445	19800	39600	1.6386	0.8193	30x30x24 Tee
130	30	0.908	17873		6564		24437	19800	39600	1.2342	0.6171	30" Tee

Prepared by: Chris Kandalepas
Checked by: Dan Quijano

Stress Table for Main Steam System - Unit 1
MS from Containment Penetration P-1 & P-2 to H.P. Turbine Control Valves and to Condenser
(Based on analysis results from Shaw Group Pipe Analysis, Reference 6)

Input Data from Analysis			Eq. 9B		Eq. 10							
NODES	Outside dia. D_O (in)	Pipe thickness t_n (in)	Pipe Stress psi	IWA Stress psi	Pipe Stress psi	IWA Stress psi	Comb. Stress psi	Limit for Crack	Limit for Break	Ratio = Comb. St. / Crack Limit	Ratio = Comb. St. / Break Limit	COMMENTS
145	24	0.968	20693		9784		30477	19800	39600	1.5392	0.7696	30x30x24 Tee
275	24	0.968	17273		6579		23852	19800	39600	1.2046	0.6023	24" Tee
415	16	0.656	19087		5887		24974	19800	39600	1.2613	0.6307	24x24x16 Tee
550	6.625	0.280	17305		6499		23804	19800	39600	1.2022	0.6011	16x16x6 Tee
555	6.625	0.280	22906		7343		30249	19800	39600	1.5277	0.7639	16x16x6 Tee
557	6.625	0.280	15342		7606		22948	19800	39600	1.1590	0.5795	16x16x6 Tee
565	6.625	0.280	15263		8847		24110	19800	39600	1.2177	0.6088	16x16x6 Tee
1085	6.625	0.280	24844		3277		28121	19800	39600	1.4203	0.7101	16x16x6 Tee
1090	6.625	0.280	20468		2872		23340	19800	39600	1.1788	0.5894	16x16x6 Tee
1095	6.625	0.280	18791		3027		21818	19800	39600	1.1019	0.5510	16x16x6 Tee

Note: Combined stresses at Node Point 395 are as shown in Attachment D.

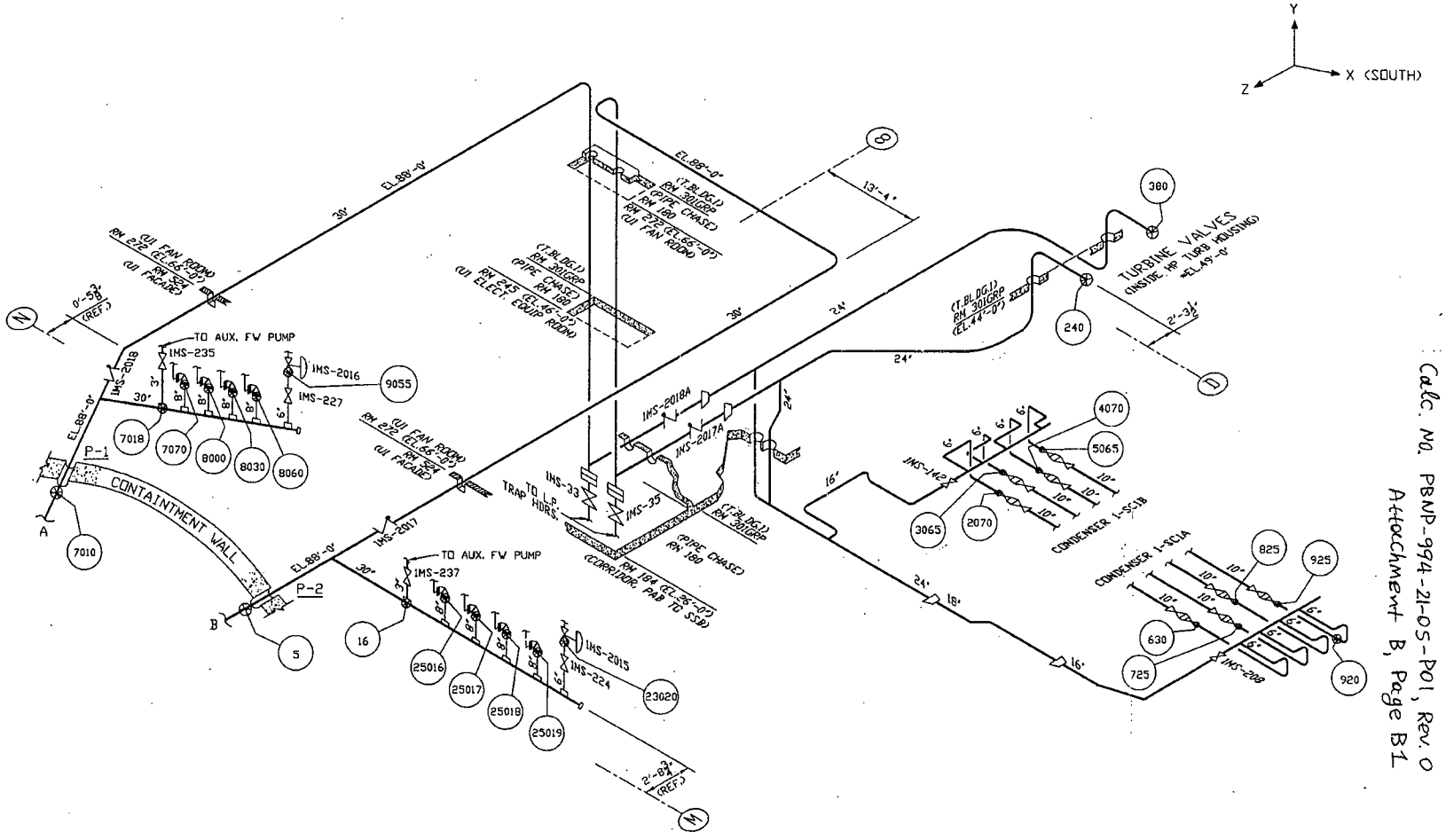

LEGEND:

⊗ - DENOTES POSTULATED PIPE LINE BREAK.

(XXX) - DENOTES BREAK NODE NUMBER.

ACCESSION NO. WE-100107
SUBSYSTEM 30"-EB-1

AUTOMATED ENGINEERING SERVICES CORP.
40 SHUMAN BLVD. SUITE 220, NAPERVILLE, IL 60563

POINT BEACH NUCLEAR PLANT				
TITLE: MAIN STEAM SYSTEM, UNIT 1 OUTSIDE CONTAINMENT TO HP TURBINE CONTROL VALVES & TO CONDENSERS POSTULATED LINEBREAKS; ISOMETRIC				
DWN: NNC	DATE: 07-09-08	SCALE: NONE	SHT.	REV.
CHKD:	APPVD:	DWG. NO. SK-MS-FIG.1		

Calc. No. PBNP-994-21-05-P01, Rev. 0
Attachment B, Page B1

CALCULATION OF LOCAL PIPE STRESSES AT INTEGRAL PIPE ATTACHMENTS

The localized stresses developed on the pipe due to integral welded attachments (IWA) are calculated below and shall be superimposed on the pipe stresses calculated by the computer analysis. As discussed in the pipe stress analysis guidelines (DG-M09, Ref. 10) the specific methodology used to calculate IWA stresses uses as a guide the applicable Code Cases (such as N-318 and N-392), Welding Research Council Bulletins or Finite Element Analysis as appropriate. ASME Code Cases N-318-5 (Ref. 15) and N-392-1 (Ref. 16) are used to calculate the local stresses due to shear lugs and hollow circular attachments respectively since these are the latest versions of the applicable Code Cases. Since the Code does not provide a criteria for analyzing pipe elbows with integral lugs, the method for calculating local stresses due to elbow lugs is in accordance with Reference 17.

The calculations below are not intended to evaluate the IWA's or the weld between the IWA and the pipe, but rather calculate the local stresses for use in evaluating HELB point locations in accordance with Section 4.0 of this calculation. The local stresses from the IWA analysis are added to the piping system stresses (Reference 6) using ASME B&PV Code Section III, Class 2 and 3, Equations 9 plus 10 to obtain the combined stresses and compare them to the threshold stress limits as given in Equations 1 and 2 in Section 4 (see pipe stress table in Attachment A).

Support No. EB-1-H3 (Drawing P-307 Sh. 62A-62C):

Geometry Input

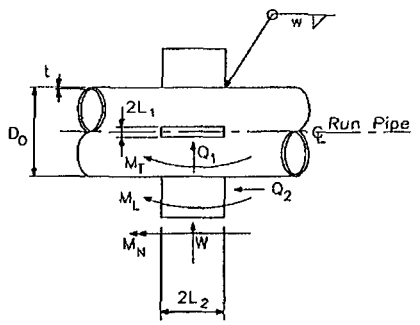

$D_o := 30.0\,in$ $\quad R_o := 0.5 \cdot D_o$ $\quad R_o = 15\,in$

$t := 0.908\,in$ $\quad r := \frac{D_o - t}{2}$ $\quad r = 14.546\,in$

$L_1 := 0.5 \cdot 3.0\,in$ $\quad L_1 = 1.5\,in$

$L_2 := 0.5 \cdot 3.0\,in$ $\quad L_2 = 1.5\,in$

$K_L := 3.6$ $\quad L_a := \min(t, L_2)$ $\quad L_a = 0.908\,in$

$w := 0.375\,in$ $\quad L_b := \min(t, L_1)$ $\quad L_b = 0.908\,in$

$L_c := \min(L_1, L_2)$ $\quad L_c = 1.5\,in$

$L_d := \max(L_1, L_2)$ $\quad L_d = 1.5\,in$

$j := 1..6$

		Eq. 8	Eq. 9B	Eq. 9C	Eq. 9D	Eq. 10	Peak**	
W =		1	2	3	4	5	6	lb
	1	0	0	0	0	0	0	

Q_2 =		1	2	3	4	5	6	lb
	1	15448	21328	27209	0	11148	0	

M_L =		1	2	3	4	5	6	lb·in
	1	0	0	0	0	0	0	

Note: Loads are based on two lugs active (conservative). Shear lugs are welded to the clamp.

		M_A/Z	(M_A+M_B/Z)	(M_A+M_B/Z)	(M_A+M_B/Z)	M_C/Z	
P_{stress} =		1	2	3	4	5	psi
	1	0	0	0	0	0	

$P := 0 \cdot psi$ $\quad Pmax := 0 \cdot psi$ (Note: Stress due to pressure is included in above pipe stresses)

Limitations

$\gamma := \frac{r}{t}$ $\gamma = 16.02$ < 50 OK $\beta_2 := \frac{L_2}{r}$ $\beta_2 = 0.103$ < 0.5 OK

$\beta_1 := \frac{L_1}{r}$ $\beta_1 = 0.103$ < 0.5 OK $\beta_1 \cdot \beta_2 = 0.011$ < 0.075 OK

ATTACHMENT PROPERTIES

$A_1 := 4 \cdot L_1 \cdot L_2$ $A_1 = 9\,in^2$

$Z_{1L} := \left(\frac{4}{3}\right)\left(L_1 \cdot L_2^2\right)$ $Z_{1L} = 4.5\,in^3$

$Z_{1N} := \left(\frac{4}{3}\right)\left(L_1^2 \cdot L_2\right)$ $Z_{1N} = 4.5\,in^3$

STRESS INDICES

$i := 1..3$

$A_o := \begin{pmatrix} 2.2 \\ 2.0 \\ 1.8 \end{pmatrix}$ $\theta := \begin{pmatrix} 40 \\ 50 \\ 40 \end{pmatrix} \cdot deg$ $X_o := \begin{pmatrix} 0.0 \\ -0.45 \\ -0.75 \end{pmatrix}$ $Y_o := \begin{pmatrix} 0.05 \\ -0.55 \\ -0.60 \end{pmatrix}$

$X_1 := X_o + \log(\beta_1)$ $X_1 = \begin{pmatrix} -0.99 \\ -1.44 \\ -1.74 \end{pmatrix}$ $Y_1 := Y_o + \log(\beta_2)$ $Y_1 = \begin{pmatrix} -0.94 \\ -1.54 \\ -1.59 \end{pmatrix}$

$\eta_i := -\left(X_{1_i} \cdot \cos(\theta_i) + Y_{1_i} \cdot \sin(\theta_i)\right) - \left(\frac{1}{A_{o_i}}\right) \cdot \left(X_{1_i} \cdot \sin(\theta_i) - Y_{1_i} \cdot \cos(\theta_i)\right)^2$ $\eta = \begin{pmatrix} 1 \\ 2 \\ 2 \end{pmatrix}$

$C_T := \max\left[3.82 \cdot \gamma^{1.64} \cdot \beta_1 \cdot \beta_2 \cdot (\eta_1)^{1.54}, 1\right]$ $C_T = 6.13$ $B_T := \max\left(\frac{2}{3} \cdot C_T, 1\right)$ $B_T = 4.087$

$C_L := \max\left[0.26 \cdot \gamma^{1.74} \cdot \beta_1 \cdot \beta_2^2 \cdot (\eta_2)^{4.74}, 1\right]$ $C_L = 1.18$ $B_L := \max\left(\frac{2}{3} \cdot C_L, 1\right)$ $B_L = 1.00$

$C_N := \max\left[0.38 \cdot \gamma^{1.9} \cdot \beta_1^2 \cdot \beta_2 \cdot (\eta_3)^{3.4}, 1\right]$ $C_N = 1.47$ $B_N := \max\left(\frac{2}{3} \cdot C_N, 1\right)$ $B_N = 1.00$

LOCAL STRESSES

$j := 1..4$

$$S_{ml_{1,j}} := \frac{B_T \cdot W_{1,j}}{A_1} + \frac{B_L \cdot M_{L_{1,j}}}{Z_{1L}} + \frac{Q_{2_{1,j}}}{2 \cdot L_2 \cdot L_b}$$

$S_{ml} =$

	Eq. 8	Eq. 9B	Eq. 9C	Eq. 9D
	1	2	3	4
1	5671	7830	9989	0

psi

$$S_{nl} := \frac{C_T \cdot W_{1,5}}{A_1} + \frac{C_L \cdot M_{L_{1,5}}}{Z_{1L}} + \frac{Q_{2_{1,5}}}{2 \cdot L_2 \cdot L_b}$$

$S_{nl} = 4092.51\,\text{lpsi}$ Range

$S_{pl} := K_L \cdot S_{nl}$

$S_{pl} = 14733.04\text{psi}$ Range

$$S_{nl_ee} := \frac{C_T \cdot W_{1,6}}{A_1} + \frac{C_L \cdot M_{L_{1,6}}}{Z_{1L}} + \frac{Q_{2_{1,6}}}{2 \cdot L_2 \cdot L_b}$$

$S_{nl_ee} = 0\,\text{psi}$ Peak**

MODIFIED CODE EQUATIONS

$B_1 := 0.5$ $B_2 := 1.0$ for straight pipe

EQ. 8

$$B_1 \cdot \frac{P \cdot D_o}{2 \cdot t} + P_{stress_{1,1}} + S_{ml_{1,1}} = 5671\text{psi}$$

EQ. (9B)

$$B_1 \cdot \frac{P \cdot D_o}{2 \cdot t} + P_{stress_{1,2}} + S_{ml_{1,2}} = 7830\text{psi}$$

EQ. (9C)

$$B_1 \cdot \frac{P \cdot D_o}{2 \cdot t} + P_{stress_{1,3}} + S_{ml_{1,3}} = 9989\text{psi}$$

EQ. (10)

$$P_{stress_{1,5}} + \frac{S_{pl}}{2} = 7367\text{psi}$$

Support No. EB-2-H9 (Drawing P-307 Sh. 16A-16B):

Geometry Input

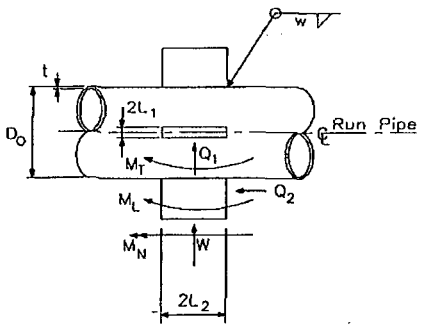

$D_o := 16.0\,in$ $\quad R_o := 0.5 \cdot D_o$ $\quad R_o = 8\,in$

$t := 0.656\,in$ $\quad r := \frac{D_o - t}{2}$ $\quad r = 7.672\,in$

$L_1 := 0.5 \cdot 0.5\,in$ $\quad L_1 = 0.25\,in$

$L_2 := 0.5 \cdot 3.0\,in$ $\quad L_2 = 1.5\,in$

$K_L := 3.6$ $\quad L_a := \min(t, L_2)$ $\quad L_a = 0.656\,in$

$w := 0.25\,in$ $\quad L_b := \min(t, L_1)$ $\quad L_b = 0.25\,in$

$L_c := \min(L_1, L_2)$ $\quad L_c = 0.25\,in$

$L_d := \max(L_1, L_2)$ $\quad L_d = 1.5\,in$

$j := 1..6$

		Eq. 8	Eq. 9B	Eq. 9C	Eq. 9D	Eq. 10	Peak**	
W =		1	2	3	4	5	6	lb
	1	2197	2896	3595	0	976	0	

		1	2	3	4	5	6	
Q_2 =	1	0	0	0	0	0	0	lb

		1	2	3	4	5	6	
M_L =	1	0	0	0	0	0	0	lb·in

		M_A/Z	(M_A+M_B/Z)	(M_A+M_B/Z)	(M_A+M_B/Z)	M_C/Z	
P_{stress} =		1	2	3	4	5	psi
	1	0	0	0	0	0	

$P := 0 \cdot psi$ $\quad Pmax := 0 \cdot psi$ (Note: Stress due to pressure is included in above pipe stresses)

Limitations

$\gamma := \frac{r}{t}$ $\gamma = 11.7$ < 50 OK $\beta_2 := \frac{L_2}{r}$ $\beta_2 = 0.196$ < 0.5 OK

$\beta_1 := \frac{L_1}{r}$ $\beta_1 = 0.033$ < 0.5 OK $\beta_1 \cdot \beta_2 = 0.006$ < 0.075 OK

ATTACHMENT PROPERTIES

$A_1 := 4 \cdot L_1 \cdot L_2$ $A_1 = 1.5 in^2$

$Z_{1L} := \left(\frac{4}{3}\right)\left(L_1 \cdot L_2^2\right)$ $Z_{1L} = 0.75 in^3$

$Z_{1N} := \left(\frac{4}{3}\right)\left(L_1^2 \cdot L_2\right)$ $Z_{1N} = 0.125 in^3$

STRESS INDICES

$i := 1..3$

$A_o := \begin{pmatrix} 2.2 \\ 2.0 \\ 1.8 \end{pmatrix}$ $\theta := \begin{pmatrix} 40 \\ 50 \\ 40 \end{pmatrix} \cdot deg$ $X_o := \begin{pmatrix} 0.0 \\ -0.45 \\ -0.75 \end{pmatrix}$ $Y_o := \begin{pmatrix} 0.05 \\ -0.55 \\ -0.60 \end{pmatrix}$

$X_1 := X_o + \log(\beta_1)$ $X_1 = \begin{pmatrix} -1.49 \\ -1.94 \\ -2.24 \end{pmatrix}$ $Y_1 := Y_o + \log(\beta_2)$ $Y_1 = \begin{pmatrix} -0.66 \\ -1.26 \\ -1.31 \end{pmatrix}$

$\eta_i := -\left(X_{1_i} \cdot \cos(\theta_i) + Y_{1_i} \cdot \sin(\theta_i)\right) - \left(\frac{1}{A_{o_i}}\right) \cdot \left(X_{1_i} \cdot \sin(\theta_i) - Y_{1_i} \cdot \cos(\theta_i)\right)^2$ $\eta = \begin{pmatrix} 1 \\ 2 \\ 2 \end{pmatrix}$

$C_T := \max\left[3.82 \cdot \gamma^{1.64} \cdot \beta_1 \cdot \beta_2 \cdot (\eta_1)^{1.54}, 1\right]$ $C_T = 2.5$ $B_T := \max\left(\frac{2}{3} \cdot C_T, 1\right)$ $B_T = 1.657$

$C_L := \max\left[0.26 \cdot \gamma^{1.74} \cdot \beta_1 \cdot \beta_2^2 \cdot (\eta_2)^{4.74}, 1\right]$ $C_L = 1.00$ $B_L := \max\left(\frac{2}{3} \cdot C_L, 1\right)$ $B_L = 1.00$

$C_N := \max\left[0.38 \cdot \gamma^{1.9} \cdot \beta_1^2 \cdot \beta_2 \cdot (\eta_3)^{3.4}, 1\right]$ $C_N = 1.00$ $B_N := \max\left(\frac{2}{3} \cdot C_N, 1\right)$ $B_N = 1.00$

LOCAL STRESSES

$j := 1..4$

$$S_{ml_{1,j}} := \frac{B_T \cdot W_{1,j}}{A_1} + \frac{B_L \cdot M_{L_{1,j}}}{Z_{1L}} + \frac{Q_{2_{1,j}}}{2 \cdot L_2 \cdot L_b}$$

$S_{ml} =$

	Eq. 8	Eq. 9B	Eq. 9C	Eq. 9D
	1	2	3	4
1	2427	3200	3972	0

psi

$$S_{nl} := \frac{C_T \cdot W_{1,5}}{A_1} + \frac{C_L \cdot M_{L_{1,5}}}{Z_{1L}} + \frac{Q_{2_{1,5}}}{2 \cdot L_2 \cdot L_b}$$

$S_{nl} = 1617.556 psi$ Range

$S_{pl} := K_L \cdot S_{nl}$

$S_{pl} = 5823.2 psi$ Range

$$S_{nl_ee} := \frac{C_T \cdot W_{1,6}}{A_1} + \frac{C_L \cdot M_{L_{1,6}}}{Z_{1L}} + \frac{Q_{2_{1,6}}}{2 \cdot L_2 \cdot L_b}$$

$S_{nl_ee} = 0 psi$ Peak**

MODIFIED CODE EQUATIONS

$B_1 := 0.5$ $B_2 := 1.0$ for straight pipe

EQ. 8

$$B_1 \cdot \frac{P \cdot D_o}{2 \cdot t} + P_{stress_{1,1}} + S_{ml_{1,1}} = 2427 psi$$

EQ. (9B)

$$B_1 \cdot \frac{P \cdot D_o}{2 \cdot t} + P_{stress_{1,2}} + S_{ml_{1,2}} = 3200 psi$$

EQ. (9C)

$$B_1 \cdot \frac{P \cdot D_o}{2 \cdot t} + P_{stress_{1,3}} + S_{ml_{1,3}} = 3972 psi$$

EQ. (10)

$$P_{stress_{1,5}} + \frac{S_{pl}}{2} = 2912 psi$$

Support No. EB-1-H15 (Drawing P-307 Sh. 63A-63C):

Geometry Input

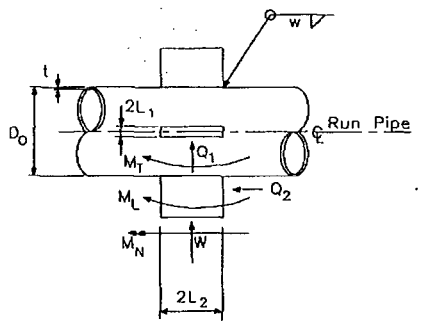

$D_o := 30.0\,in$ $\quad R_o := 0.5 \cdot D_o$ $\quad R_o = 15\,in$

$t := 0.908\,in$ $\quad r := \frac{D_o - t}{2}$ $\quad r = 14.546\,in$

$L_1 := 0.5 \cdot 3.0\,in$ $\quad L_1 = 1.5\,in$

$L_2 := 0.5 \cdot 3.0\,in$ $\quad L_2 = 1.5\,in$

$K_L := 3.6$ $\quad L_a := \min(t, L_2)$ $\quad L_a = 0.908\,in$

$w := 0.375\,in$ $\quad L_b := \min(t, L_1)$ $\quad L_b = 0.908\,in$

$L_c := \min(L_1, L_2)$ $\quad L_c = 1.5\,in$

$L_d := \max(L_1, L_2)$ $\quad L_d = 1.5\,in$

$j := 1..6$

W =

	Eq. 8	Eq. 9B	Eq. 9C	Eq. 9D	Eq. 10	Peak**
	1	2	3	4	5	6
1	0	0	0	0	0	0

lb

Q_2 =

	1	2	3	4	5	6
1	16700	22482	28262	0	12991	0

lb

M_L =

	1	2	3	4	5	6
1	0	0	0	0	0	0

lb·in

Note: Loads are based on two lugs active (conservative). Shear lugs are welded to the clamp.

P_{stress} =

	M_A/Z	(M_A+M_B/Z)	(M_A+M_B/Z)	(M_A+M_B/Z)	M_C/Z
	1	2	3	4	5
1	0	0	0	0	0

psi

$P := 0 \cdot psi$ $\quad Pmax := 0 \cdot psi$ (Note: Stress due to pressure is included in above pipe stresses)

Limitations

$\gamma := \frac{r}{t}$ $\gamma = 16.02$ < 50 OK $\beta_2 := \frac{L_2}{r}$ $\beta_2 = 0.103$ < 0.5 OK

$\beta_1 := \frac{L_1}{r}$ $\beta_1 = 0.103$ < 0.5 OK $\beta_1 \cdot \beta_2 = 0.011$ < 0.075 OK

ATTACHMENT PROPERTIES

$A_1 := 4 \cdot L_1 \cdot L_2$ $A_1 = 9\,in^2$

$Z_{1L} := \left(\frac{4}{3}\right)\left(L_1 \cdot L_2^2\right)$ $Z_{1L} = 4.5\,in^3$

$Z_{1N} := \left(\frac{4}{3}\right)\left(L_1^2 \cdot L_2\right)$ $Z_{1N} = 4.5\,in^3$

STRESS INDICES

$i := 1..3$

$A_o := \begin{pmatrix} 2.2 \\ 2.0 \\ 1.8 \end{pmatrix}$ $\theta := \begin{pmatrix} 40 \\ 50 \\ 40 \end{pmatrix} \cdot deg$ $X_o := \begin{pmatrix} 0.0 \\ -0.45 \\ -0.75 \end{pmatrix}$ $Y_o := \begin{pmatrix} 0.05 \\ -0.55 \\ -0.60 \end{pmatrix}$

$X_1 := X_o + \log(\beta_1)$ $X_1 = \begin{pmatrix} -0.99 \\ -1.44 \\ -1.74 \end{pmatrix}$ $Y_1 := Y_o + \log(\beta_2)$ $Y_1 = \begin{pmatrix} -0.94 \\ -1.54 \\ -1.59 \end{pmatrix}$

$\eta_i := -\left(X_{1_i} \cdot \cos(\theta_i) + Y_{1_i} \cdot \sin(\theta_i)\right) - \left(\frac{1}{A_{o_i}}\right) \cdot \left(X_{1_i} \cdot \sin(\theta_i) - Y_{1_i} \cdot \cos(\theta_i)\right)^2$ $\eta = \begin{pmatrix} 1 \\ 2 \\ 2 \end{pmatrix}$

$C_T := \max\left[3.82\gamma^{1.64} \cdot \beta_1 \cdot \beta_2 \cdot (\eta_1)^{1.54}, 1\right]$ $C_T = 6.13$ $B_T := \max\left(\frac{2}{3} \cdot C_T, 1\right)$ $B_T = 4.087$

$C_L := \max\left[0.26\gamma^{1.74} \cdot \beta_1 \cdot \beta_2^2 \cdot (\eta_2)^{4.74}, 1\right]$ $C_L = 1.18$ $B_L := \max\left(\frac{2}{3} \cdot C_L, 1\right)$ $B_L = 1.00$

$C_N := \max\left[0.38\gamma^{1.9} \cdot \beta_1^2 \cdot \beta_2 \cdot (\eta_3)^{3.4}, 1\right]$ $C_N = 1.47$ $B_N := \max\left(\frac{2}{3} \cdot C_N, 1\right)$ $B_N = 1.00$

LOCAL STRESSES

$j := 1..4$

$$S_{ml_{1,j}} := \frac{B_T \cdot W_{1,j}}{A_1} + \frac{B_L \cdot M_{L_{1,j}}}{Z_{1L}} + \frac{Q_{2_{1,j}}}{2 \cdot L_2 \cdot L_b}$$

$S_{ml} =$

	Eq. 8	Eq. 9B	Eq. 9C	Eq. 9D
	1	2	3	4
1	6131	8253	10375	0

psi

$$S_{nl} := \frac{C_T \cdot W_{1,5}}{A_1} + \frac{C_L \cdot M_{L_{1,5}}}{Z_{1L}} + \frac{Q_{2_{1,5}}}{2 \cdot L_2 \cdot L_b}$$

$S_{nl} = 4769.09$psi Range

$S_{pl} := K_L \cdot S_{nl}$

$S_{pl} = 17168.72$psi Range

$$S_{nl_ee} := \frac{C_T \cdot W_{1,6}}{A_1} + \frac{C_L \cdot M_{L_{1,6}}}{Z_{1L}} + \frac{Q_{2_{1,6}}}{2 \cdot L_2 \cdot L_b}$$

$S_{nl_ee} = 0$ psi Peak**

MODIFIED CODE EQUATIONS

$B_1 := 0.5$ $B_2 := 1.0$ for straight pipe

EQ. 8

$$B_1 \cdot \frac{P \cdot D_o}{2 \cdot t} + P_{stress_{1,1}} + S_{ml_{1,1}} = 6131\text{psi}$$

EQ. (9B)

$$B_1 \cdot \frac{P \cdot D_o}{2 \cdot t} + P_{stress_{1,2}} + S_{ml_{1,2}} = 8253\text{psi}$$

EQ. (9C)

$$B_1 \cdot \frac{P \cdot D_o}{2 \cdot t} + P_{stress_{1,3}} + S_{ml_{1,3}} = 10375\text{psi}$$

EQ. (10)

$$P_{stress_{1,5}} + \frac{S_{pl}}{2} = 8584\text{psi}$$

Support No. EB-2-H18 (Drawing P-307 Sh. 61A-61B):

Geometry Input

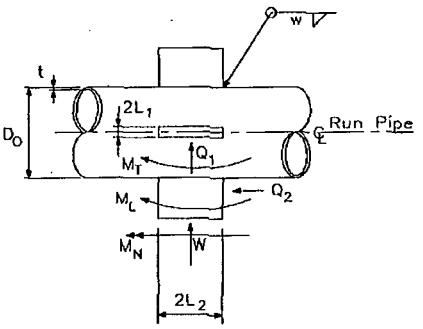

$D_o := 16.0\,in$ $\quad R_o := 0.5 \cdot D_o$ $\quad R_o = 8\,in$

$t := 0.656\,in$ $\quad r := \frac{D_o - t}{2}$ $\quad r = 7.672\,in$

$L_1 := 0.5 \cdot 0.5\,in$ $\quad L_1 = 0.25\,in$

$L_2 := 0.5 \cdot 3.0\,in$ $\quad L_2 = 1.5\,in$

$K_L := 3.6$ $\quad L_a := \min(t, L_2)$ $\quad L_a = 0.656\,in$

$w := 0.25\,in$ $\quad L_b := \min(t, L_1)$ $\quad L_b = 0.25\,in$

$L_c := \min(L_1, L_2)$ $\quad L_c = 0.25\,in$

$L_d := \max(L_1, L_2)$ $\quad L_d = 1.5\,in$

$j := 1..6$

$W =$

	Eq. 8	Eq. 9B	Eq. 9C	Eq. 9D	Eq. 9D	Peak**
	1	2	3	4	5	6
1	1411	2290	3169	0	658	0

lb

$Q_2 =$

	1	2	3	4	5	6
1	0	0	0	0	0	0

lb

$M_L =$

	1	2	3	4	5	6
1	0	0	0	0	0	0

lb·in

$P_{stress} =$

	M_A/Z	(M_A+M_B/Z)	(M_A+M_B/Z)	(M_A+M_B/Z)	M_C/Z
	1	2	3	4	5
1	0	0	0	0	0

psi

$P := 0 \cdot psi$ $\quad Pmax := 0 \cdot psi$ (Note: Stress due to pressure is included in above pipe stresses)

Limitations

$\gamma := \frac{r}{t}$ $\quad \gamma = 11.7 \quad < \quad 50$ OK $\qquad \beta_2 := \frac{L_2}{r}$ $\quad \beta_2 = 0.196 \quad < \quad 0.5$ OK

$\beta_1 := \frac{L_1}{r}$ $\quad \beta_1 = 0.033 \quad < \quad 0.5$ OK $\qquad \beta_1 \cdot \beta_2 = 0.006 \quad < \quad 0.075$ OK

ATTACHMENT PROPERTIES

$A_1 := 4 \cdot L_1 \cdot L_2 \qquad A_1 = 1.5 in^2$

$Z_{1L} := \left(\frac{4}{3}\right)\left(L_1 \cdot L_2^2\right) \qquad Z_{1L} = 0.75 in^3$

$Z_{1N} := \left(\frac{4}{3}\right)\left(L_1^2 \cdot L_2\right) \qquad Z_{1N} = 0.125 in^3$

STRESS INDICES

$i := 1..3$

$A_o := \begin{pmatrix} 2.2 \\ 2.0 \\ 1.8 \end{pmatrix} \qquad \theta := \begin{pmatrix} 40 \\ 50 \\ 40 \end{pmatrix} \cdot deg \qquad X_o := \begin{pmatrix} 0.0 \\ -0.45 \\ -0.75 \end{pmatrix} \qquad Y_o := \begin{pmatrix} 0.05 \\ -0.55 \\ -0.60 \end{pmatrix}$

$X_1 := X_o + \log(\beta_1) \qquad X_1 = \begin{pmatrix} -1.49 \\ -1.94 \\ -2.24 \end{pmatrix} \qquad Y_1 := Y_o + \log(\beta_2) \qquad Y_1 = \begin{pmatrix} -0.66 \\ -1.26 \\ -1.31 \end{pmatrix}$

$\eta_i := -\left(X_{1_i} \cdot \cos(\theta_i) + Y_{1_i} \cdot \sin(\theta_i)\right) - \left(\frac{1}{A_{o_i}}\right) \cdot \left(X_{1_i} \cdot \sin(\theta_i) - Y_{1_i} \cdot \cos(\theta_i)\right)^2 \qquad \eta = \begin{pmatrix} 1 \\ 2 \\ 2 \end{pmatrix}$

$C_T := \max\left[3.82\gamma^{1.64} \cdot \beta_1 \cdot \beta_2 \cdot (\eta_1)^{1.54}, 1\right] \qquad C_T = 2.5 \qquad B_T := \max\left(\frac{2}{3} \cdot C_T, 1\right) \qquad B_T = 1.657$

$C_L := \max\left[0.26\gamma^{1.74} \cdot \beta_1 \cdot \beta_2^2 \cdot (\eta_2)^{4.74}, 1\right] \qquad C_L = 1.00 \qquad B_L := \max\left(\frac{2}{3} \cdot C_L, 1\right) \qquad B_L = 1.00$

$C_N := \max\left[0.38\gamma^{1.9} \cdot \beta_1^2 \cdot \beta_2 \cdot (\eta_3)^{3.4}, 1\right] \qquad C_N = 1.00 \qquad B_N := \max\left(\frac{2}{3} \cdot C_N, 1\right) \qquad B_N = 1.00$

LOCAL STRESSES

$j := 1..4$

$$S_{ml_{1,j}} := \frac{B_T \cdot W_{1,j}}{A_1} + \frac{B_L \cdot M_{L_{1,j}}}{Z_{1L}} + \frac{Q_{2_{1,j}}}{2 \cdot L_2 \cdot L_b}$$

$S_{ml} =$

	Eq. 8	Eq. 9B	Eq. 9C	Eq. 9D
	1	2	3	4
1	1559	2530	3501	0

psi

$$S_{nl} := \frac{C_T \cdot W_{1,5}}{A_1} + \frac{C_L \cdot M_{L_{1,5}}}{Z_{1L}} + \frac{Q_{2_{1,5}}}{2 \cdot L_2 \cdot L_b}$$

$S_{nl} = 1090.524\text{psi}$ Range

$S_{pl} := K_L \cdot S_{nl}$

$S_{pl} = 3925.89\text{psi}$ Range

$$S_{nl_ce} := \frac{C_T \cdot W_{1,6}}{A_1} + \frac{C_L \cdot M_{L_{1,6}}}{Z_{1L}} + \frac{Q_{2_{1,6}}}{2 \cdot L_2 \cdot L_b}$$

$S_{nl_ce} = 0\text{psi}$ Peak**

MODIFIED CODE EQUATIONS

$B_1 := 0.5$ $B_2 := 1.0$ for straight pipe

EQ. 8

$$B_1 \cdot \frac{P \cdot D_o}{2 \cdot t} + P_{stress_{1,1}} + S_{ml_{1,1}} = 1559\text{psi}$$

EQ. (9B)

$$B_1 \cdot \frac{P \cdot D_o}{2 \cdot t} + P_{stress_{1,2}} + S_{ml_{1,2}} = 2530\text{psi}$$

EQ. (9C)

$$B_1 \cdot \frac{P \cdot D_o}{2 \cdot t} + P_{stress_{1,3}} + S_{ml_{1,3}} = 3501\text{psi}$$

EQ. (10)

$$P_{stress_{1,5}} + \frac{S_{pl}}{2} = 1963\text{psi}$$

Support No. EB-1-H14 (Drawing P-307 Sh. 40A-40B):

Geometry Input

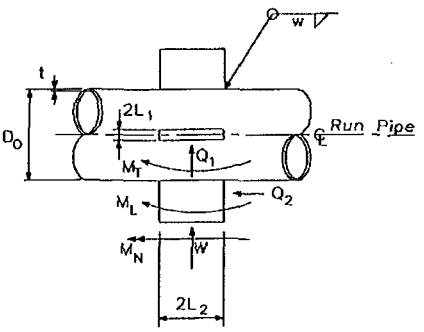

$D_o := 24.0\,in$ $\quad R_o := 0.5 \cdot D_o$ $\quad R_o = 12\,in$

$t := 0.968\,in$ $\quad r := \frac{D_o - t}{2}$ $\quad r = 11.516\,in$

$L_1 := 0.5 \cdot 0.75\,in$ $\quad L_1 = 0.375\,in$

$L_2 := 0.5 \cdot 7.0\,in$ $\quad L_2 = 3.5\,in$

$K_L := 3.6$ $\quad L_a := \min(t, L_2)$ $\quad L_a = 0.968\,in$

$w := 0.25\,in$ $\quad L_b := \min(t, L_1)$ $\quad L_b = 0.375\,in$

$L_c := \min(L_1, L_2)$ $\quad L_c = 0.375\,in$

$L_d := \max(L_1, L_2)$ $\quad L_d = 3.5\,in$

$j := 1..6$

W =

	Eq. 8	Eq. 9B	Eq. 9C	Eq. 9D	Eq. 10	Peak**
1	31914	31914	31914	0	0	0

lb

Q_2 =

	1	2	3	4	5	6
1	0	0	0	0	0	0

lb

M_L =

	1	2	3	4	5	6
1	0	0	0	0	0	0

lb·in

P_{stress} =

	M_A/Z	(M_A+M_B/Z)	(M_A+M_B/Z)	(M_A+M_B/Z)	M_C/Z
1	0	0	0	0	0

psi

$P := 0 \cdot psi$ $\quad Pmax := 0 \cdot psi$ (Note: Stress due to pressure are included with the pipe system stresses)

Limitations

$\gamma := \frac{r}{t}$ $\gamma = 11.9$ < 50 OK $\beta_2 := \frac{L_2}{r}$ $\beta_2 = 0.304$ < 0.5 OK

$\beta_1 := \frac{L_1}{r}$ $\beta_1 = 0.033$ < 0.5 OK $\beta_1 \cdot \beta_2 = 0.01$ < 0.075 OK

ATTACHMENT PROPERTIES

$A_1 := 4 \cdot L_1 \cdot L_2$ $A_1 = 5.25 in^2$

$Z_{1L} := \left(\frac{4}{3}\right)\left(L_1 \cdot L_2^2\right)$ $Z_{1L} = 6.12 in^3$

$Z_{1N} := \left(\frac{4}{3}\right)\left(L_1^2 \cdot L_2\right)$ $Z_{1N} = 0.656 in^3$

STRESS INDICES

$i := 1..3$

$A_o := \begin{pmatrix} 2.2 \\ 2.0 \\ 1.8 \end{pmatrix}$ $\theta := \begin{pmatrix} 40 \\ 50 \\ 40 \end{pmatrix} \cdot deg$ $X_o := \begin{pmatrix} 0.0 \\ -0.45 \\ -0.75 \end{pmatrix}$ $Y_o := \begin{pmatrix} 0.05 \\ -0.55 \\ -0.60 \end{pmatrix}$

$X_1 := X_o + \log(\beta_1)$ $X_1 = \begin{pmatrix} -1.49 \\ -1.94 \\ -2.24 \end{pmatrix}$ $Y_1 := Y_o + \log(\beta_2)$ $Y_1 = \begin{pmatrix} -0.47 \\ -1.07 \\ -1.12 \end{pmatrix}$

$\eta_i := -\left(X_{1_i} \cdot \cos(\theta_i) + Y_{1_i} \cdot \sin(\theta_i)\right) - \left(\frac{1}{A_{o_i}}\right) \cdot \left(X_{1_i} \cdot \sin(\theta_i) - Y_{1_i} \cdot \cos(\theta_i)\right)^2$ $\eta = \begin{pmatrix} 1.277 \\ 1.744 \\ 2.244 \end{pmatrix}$

$C_T := max\left[3.82 \cdot \gamma^{1.64} \cdot \beta_1 \cdot \beta_2 \cdot (\eta_1)^{1.54}, 1\right]$ $C_T = 3.198$ $B_T := max\left(\frac{2}{3} \cdot C_T, 1\right)$ $B_T = 2.132$

$C_L := max\left[0.26 \gamma^{1.74} \cdot \beta_1 \cdot \beta_2^2 \cdot (\eta_2)^{4.74}, 1\right]$ $C_L = 1.00$ $B_L := max\left(\frac{2}{3} \cdot C_L, 1\right)$ $B_L = 1.00$

$C_N := max\left[0.38 \gamma^{1.9} \cdot \beta_1^2 \cdot \beta_2 \cdot (\eta_3)^{3.4}, 1\right]$ $C_N = 1.00$ $B_N := max\left(\frac{2}{3} \cdot C_N, 1\right)$ $B_N = 1.00$

LOCAL STRESSES

$j := 1..4$

$$S_{ml_{1,j}} := \frac{B_T \cdot W_{1,j}}{A_1} + \frac{B_L \cdot M_{L_{1,j}}}{Z_{1L}} + \frac{Q_{2_{1,j}}}{2 \cdot L_2 \cdot L_b}$$

$S_{ml} =$

	Eq. 8	Eq. 9B	Eq. 9C	Eq. 9D
	1	2	3	4
1	12958	12958	12958	0

psi

$$S_{nl} := \frac{C_T \cdot W_{1,5}}{A_1} + \frac{C_L \cdot M_{L_{1,5}}}{Z_{1L}} + \frac{Q_{2_{1,5}}}{2 \cdot L_2 \cdot L_b}$$

$S_{nl} = 0\,psi$ Range

$S_{pl} := K_L \cdot S_{nl}$ $S_{pl} = 0\,psi$ Range

$$S_{nl_ee} := \frac{C_T \cdot W_{1,6}}{A_1} + \frac{C_L \cdot M_{L_{1,6}}}{Z_{1L}} + \frac{Q_{2_{1,6}}}{2 \cdot L_2 \cdot L_b}$$

$S_{nl_ee} = 0\,psi$ Peak**

MODIFIED CODE EQUATIONS

$B_1 := 0.5$ $B_2 := 1.0$ for straight pipe

EQ. 8

$$B_1 \cdot \frac{P \cdot D_o}{2 \cdot t} + P_{stress_{1,1}} + S_{ml_{1,1}} = 12958psi$$

EQ. (9B)

$$B_1 \cdot \frac{P \cdot D_o}{4 \cdot t} + P_{stress_{1,2}} + S_{ml_{1,2}} = 12958psi$$

EQ. (9C)

$$B_1 \cdot \frac{P \cdot D_o}{4 \cdot t} + P_{stress_{1,3}} + S_{ml_{1,3}} = 12958psi$$

EQ. (10)

$$P_{stress_{1,5}} + \frac{S_{pl}}{2} = 0\,psi$$

Support No. EB-2-H10, H11, H12, & H13 (Drawing P-307 Sh. 17A-17B):

Geometry Input

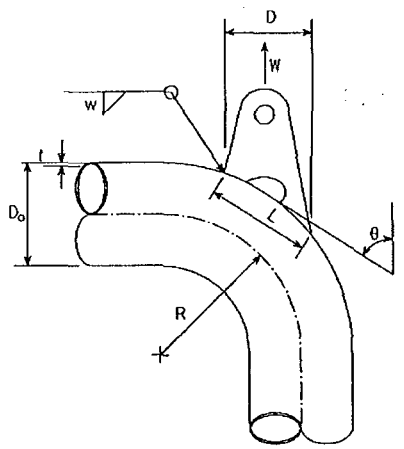

$D_o := 6.625\,in$ $\quad R_o := 0.5 \cdot D_o$ $\quad R_o = 3.312in$

$R := 9.000\,in$ $\quad r := 3.173in$

$D := 3.000\,in$ $\quad \theta := acos\left(\frac{R}{R + R_o}\right)$ $\quad \theta = 43.0deg$

$t := 0.280\,in$ $\quad L := \frac{D}{sin(\theta)}$ $\quad L = 4.396in$

$K_L := 3.600$ $\quad W_{leg} := 0.25in$

$j := 1..6$

	Eq. 8	Eq. 9B	Eq. 9C	Eq. 9D	Eq. 10	Peak**	
W =	2269	2910	3551	0	646	0	lbf

	M_A/Z	(M_A+M_B/Z)	(M_A+M_B/Z)	(M_A+M_B/Z)	M_C/Z	
P_{stress} =	0	0	0	0	0	psi

$P := 0 \cdot psi$ $\quad Pmax := 0 \cdot psi$ (Note: Stress due to pressure are included with the pipe system stresses)

Local Stresses

$K := \frac{L^{0.5} \cdot r^{1.25}}{t^{1.75}}$ $\quad K = 82$ $\quad \geq 15$ & ≤ 280 O.K.

$$\sigma_{L.mb} := \frac{0.97 \cdot W \cdot K^{0.85}}{L \cdot r \cdot \left(1 + 0.2\frac{L}{r}\right)}$$

	Eq. 8	Eq. 9B	Eq. 9C	Eq. 9D	Range	Peak	
$\sigma_{L.mb}$ =	5251.8	6735.5	8219.1	0	1495.2	0	psi

$$\sigma_{C.mb} := \frac{1.18 \cdot W \cdot K^{0.77} \cdot \left[1 + \frac{0.47 \cdot (r \cdot t)^{0.5}}{L}\right]}{L \cdot r}$$

	Eq. 8	Eq. 9B	Eq. 9C	Eq. 9D	Range	Peak	
$\sigma_{C.mb}$ =	6310.6	8093.4	9876.2	0	1796.7	0	psi

$i := 1..4$

$S_{ml_{1,i}} := \frac{2}{3}\max\left(\sigma_{L.mb_{1,i}}, \sigma_{C.mb_{1,i}}\right)$

	Eq. 8	Eq. 9B	Eq. 9C	Eq. 9D	
$S_{ml} =$	4207	5396	6584	0	psi

$S_{nl} := \max\left(\sigma_{L.mb_{1,5}}, \sigma_{C.mb_{1,5}}\right)$ $\quad S_{nl} = 1797psi$ Range

$S_{pl} := K_L \cdot S_{nl}$ $\quad S_{pl} = 6468psi$ Range

$S'_{nl} := \max\left(\sigma_{L.mb_{1,6}}, \sigma_{C.mb_{1,6}}\right)$ $\quad S'_{nl} = 0.0psi$ Peak

MODIFIED CODE EQUATIONS

$B_1 := 0.5 \qquad B_2 := 1.0$ for straight pipe

EQ. 8

$$B_1 \cdot \frac{P \cdot D_o}{2 \cdot t} + P_{stress_{1,1}} + S_{ml_{1,1}} = 4207psi$$

EQ. (9B)

$$B_1 \cdot \frac{P \cdot D_o}{2 \cdot t} + P_{stress_{1,2}} + S_{ml_{1,2}} = 5396psi$$

EQ. (9C)

$$B_1 \cdot \frac{P \cdot D_o}{2 \cdot t} + P_{stress_{1,3}} + S_{ml_{1,3}} = 6584psi$$

EQ. (10)

$$P_{stress_{1,5}} + \frac{S_{pl}}{2} = 3234psi$$

Support No. EB -2-H19, H20, H21, & H22 (Drawing P-307 Sh. 23, 24A, 24B):

Geometry Input

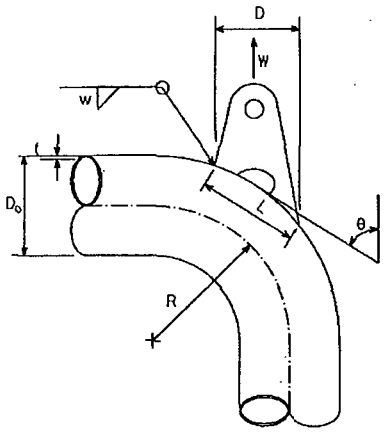

$D_o := 6.625\,in$ $\quad R_o := 0.5 \cdot D_o$ $\quad R_o = 3.312\,in$

$R := 9.000\,in$ $\quad r := 3.173\,in$

$D := 3.000\,in$ $\quad \theta := acos\left(\frac{R}{R + R_o}\right)$ $\quad \theta = 43.0\,deg$

$t := 0.280\,in$ $\quad L := \frac{D}{\sin(\theta)}$ $\quad L = 4.396\,in$

$K_L := 3.600$ $\quad W_{leg} := 0.25\,in$

$j := 1..6$

	Eq. 8	Eq. 9B	Eq. 9C	Eq. 9D	Eq. 10	Peak**	
W =	907	1676	2445	0	295	0	lbf

		M_A/Z	(M_A+M_B/Z)	(M_A+M_B/Z)	(M_A+M_B/Z)	M_C/Z	
P_{stress} =		1	2	3	4	5	psi
	1	0	0	0	0	0	

$P := 0 \cdot psi$ $\quad Pmax := 0 \cdot psi$ (Note: Stress due to pressure are included with the pipe system stresses)

Local Stresses

$K := \frac{L^{0.5} \cdot r^{1.25}}{t^{1.75}}$ $\quad K = 82$ $\quad \geq 15$ & ≤ 280 O.K.

$\sigma_{L.mb} := \frac{0.97 \cdot W \cdot K^{0.85}}{L \cdot r \cdot \left(1 + 0.2 \frac{L}{r}\right)}$

	Eq. 8	Eq. 9B	Eq. 9C	Eq. 9D	Range	Peak	
$\sigma_{L.mb}$ =	2099.3	3879.3	5659.2	0	682.8	0	psi

$\sigma_{C.mb} := \frac{1.18 \cdot W \cdot K^{0.77} \cdot \left[1 + \frac{0.47 \cdot (r \cdot t)^{0.5}}{L}\right]}{L \cdot r}$

	Eq. 8	Eq. 9B	Eq. 9C	Eq. 9D	Range	Peak	
$\sigma_{C.mb}$ =	2522.6	4661.4	6800.1	0	820.5	0	psi

$i := 1..4$

$S_{ml_{1,i}} := \frac{2}{3}\max\left(\sigma_{L.mb_{1,i}}, \sigma_{C.mb_{1,i}}\right)$

	Eq. 8	Eq. 9B	Eq. 9C	Eq. 9D	
$S_{ml} =$	1682	3108	4533	0	psi

$S_{nl} := \max\left(\sigma_{L.mb_{1,5}}, \sigma_{C.mb_{1,5}}\right)$ $\quad S_{nl} = 820psi$ Range

$S_{pl} := K_L \cdot S_{nl}$ $\quad S_{pl} = 2954psi$ Range

$S'_{nl} := \max\left(\sigma_{L.mb_{1,6}}, \sigma_{C.mb_{1,6}}\right)$ $\quad S'_{nl} = 0.000psi$ Peak

MODIFIED CODE EQUATIONS

$B_1 := 0.5 \qquad B_2 := 1.0$ for straight pipe

EQ. 8

$$B_1 \cdot \frac{P \cdot D_o}{2 \cdot t} + P_{stress_{1,1}} + S_{ml_{1,1}} = 1682psi$$

EQ. (9B)

$$B_1 \cdot \frac{P \cdot D_o}{2 \cdot t} + P_{stress_{1,2}} + S_{ml_{1,2}} = 3108psi$$

EQ. (9C)

$$B_1 \cdot \frac{P \cdot D_o}{2 \cdot t} + P_{stress_{1,3}} + S_{ml_{1,3}} = 4533psi$$

EQ. (10)

$$P_{stress_{1,5}} + \frac{S_{pl}}{2} = 1477psi$$

Support No. EB-1-H200, H201 (Drawing P-307 Sh. 31 & Sh. 32):

Geometry Input

$D_o := 3.5 \cdot in$ $\quad R_o := 0.5 \cdot D_o$ $\quad R_o = 1.75 in$

$d_o := 2.375 in$ $\quad r_o := 0.5 \cdot d_o$ $\quad r_o = 1.188 in$

$T := 0.216 in$

$t := 0.154 in$ $\quad r_i := r_o - t$ $\quad r_i = 1.034 in$

$K_T := 2.0$

$j := 1..6$

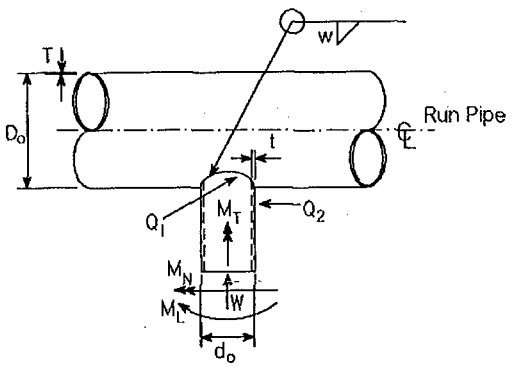

	Eq. 8	Eq. 9B	Eq. 9C	Eq. 9D	Eq. 10	Peak**	
W =	230	288	348	0	39	0	lb
Q_2 =	0	0	0	0	0	0	lb
M_L =	0	0	0	0	0	0	lb·in
M_N =	0	0	0	0	0	0	lb·in
M_T =	0	0	0	0	0	0	lb·in

	M_A/Z	(M_A+M_B/Z)	(M_A+M_B/Z)	(M_A+M_B/Z)	M_C/Z	$PD_o/4t$
P_{stress} =	0	0	0	0	0	0

$P := 0 \cdot psi$ $\quad Pmax := 0 \cdot psi$ (Note: Stress due to pressure are included with the pipe system stresses)

Limitations

$\gamma := \frac{R_o}{T}$ $\quad \gamma = 8.1$ $\quad < 8.33$

$\tau := \frac{t}{T}$ $\quad \tau = 0.713$ $\quad > 0.2$, < 1.0 $\quad$ O K

$\beta := \frac{d_o}{D_o}$ $\quad \beta = 0.679$ $\quad > 0.3$, < 1.0 $\quad$ O K

ATTACHMENT PROPERTIES

$A_T := \pi \cdot \left(r_o^2 - r_i^2\right)$ $\qquad A_T = 1.075in^2$

$I_T := \left(\frac{\pi}{4}\right) \cdot \left(r_o^4 - r_i^4\right)$ $\qquad I_T = 0.666in^4$

$Z_T := \frac{I_T}{r_o}$ $\qquad Z_T = 0.561in^3$

$Abar := \left(\frac{\pi}{2}\right)\left(r_o^2 - r_i^2\right)$ $\qquad Abar = 0.537in^2$

$Jbar := \min\left(\pi r_o^2 \cdot T, Z_T\right)$ $\qquad Jbar = 0.561in^3$

STRESS INDICES

$C = (A_o)\left[(2\gamma)^{\eta 1}\right]\left(\beta^{\eta 2}\right) \cdot \left(\tau^{\eta 3}\right) \quad . \geq 1.0$

Index	Part	β Range	A_o	η_1	η_2	η_3
C_W	Pipe	0.3 - 1.0	1.40	0.81	(a)	1.33
	Attachment	0.3 - 1.0	4.00	0.55	(b)	1.00
C_L	Pipe	0.3 - 1.0	0.46	0.60	-0.04	0.86
	Attachment	0.3 - 1.0	1.10	0.23	-0.38	0.38
C_N	Pipe	0.3 - 0.55	0.51	1.01	0.79	0.89
	Attachment	0.3 - 0.55	0.84	0.85	0.80	0.54
	Pipe	0.55 - 1.0	0.23	1.01	-0.62	0.89
	Attachment	0.55 - 1.0	0.44	0.85	-0.28	0.54

Notes: (a) Replace $\beta^{\eta 2}$ with $e^{-1.2\beta^3}$.
(b) Replace $\beta^{\eta 2}$ with $e^{-1.35\beta^3}$.

$C_{W.pipe} := (A_{o.cwp})\left[(2\gamma)^{\eta 1.cwp}\right]\left(e^{-1.2 \cdot \beta^3}\right) \cdot \left(\tau^{\eta 3.cwp}\right)$ $\qquad C_{W.pipe} = 5.857$

$C_{W.att} := (A_{o.cwa})\left[(2\gamma)^{\eta 1.cwa}\right]\left(e^{-1.35 \cdot \beta^3}\right) \cdot \left(\tau^{\eta 3.cwa}\right)$ $\qquad C_{W.att} = 8.654$

$C_{L.pipe} := (A_{o.clp})\left[(2\gamma)^{\eta 1.clp}\right]\left(\beta^{\eta 2.clp}\right) \cdot \left(\tau^{\eta 3.clp}\right)$ $\qquad C_{L.pipe} = 1.857$

$C_{L.att} := (A_{o.cla})\left[(2\gamma)^{\eta 1.cla}\right]\left(\beta^{\eta 2.cla}\right) \cdot \left(\tau^{\eta 3.cla}\right)$ $\qquad C_{L.att} = 2.127$

$$C_{N.pipe} := \text{if}\left[\beta > 0.55, \left(A_{o.cnp.2}\right)\left[(2\gamma)^{\eta_{1.cnp.2}}\right]\left(\beta^{\eta_{2.cnp.2}}\right).\left(\tau^{\eta_{3.cnp.2}}\right), \left(A_{o.cnp.1}\right)\left[(2\gamma)^{\eta_{1.cnp.1}}\right]\left(\beta^{\eta_{2.cnp.1}}\right).\left(\tau^{\eta_{3.cnp.1}}\right)\right]$$

$C_{N.pipe} = 3.606$

$$C_{N.att} := \text{if}\left[\beta > 0.55, \left(A_{o.cna.2}\right)\left[(2\gamma)^{\eta_{1.cna.2}}\right]\left(\beta^{\eta_{2.cna.2}}\right).\left(\tau^{\eta_{3.cna.2}}\right), \left(A_{o.cna.1}\right)\left[(2\gamma)^{\eta_{1.cna.1}}\right]\left(\beta^{\eta_{2.cna.1}}\right).\left(\tau^{\eta_{3.cna.1}}\right)\right]$$

$C_{N.att} = 4.359$

$C_W := \max\left(C_{W.pipe}, C_{W.att}\right)$ $\qquad C_W = 8.654$

$C_L := \max\left(C_{L.pipe}, C_{L.att}\right)$ $\qquad C_L = 2.127$

$C_N := \max\left(C_{N.pipe}, C_{N.att}\right)$ $\qquad C_N = 4.359$

$C_T = 1.0$ for $\beta \le 0.55$ $\qquad C_T = C_N$ for $\beta = 1.0$

By linear interpolation between 1.0 & C_N for $0.55 < \beta < 1.0$,

$C_T := \text{linterp}\left[\begin{pmatrix} 0.55 \\ 1.0 \end{pmatrix}, \begin{pmatrix} 1.0 \\ C_N \end{pmatrix}, \beta\right]$ $\qquad C_T = 1.960$

$B_W := \max\left(\frac{C_W}{2}, 1.0\right)$ $\qquad B_W = 4.327$

$B_L := \max\left(\frac{C_L}{2}, 1.0\right)$ $\qquad B_L = 1.063$

$B_N := \max\left(\frac{C_N}{2}, 1.0\right)$ $\qquad B_N = 2.180$

$B_T := \max\left(\frac{C_T}{2}, 1.0\right)$ $\qquad B_T = 1.000$

LOCAL STRESSES

$j := 1..4$

$$S_{MT_{1,j}} := \frac{B_W \cdot W_{1,j}}{A_T} + \frac{B_L \cdot M_{L_{1,j}}}{Z_T} + \frac{B_N \cdot M_{N_{1,j}}}{Z_T} + \frac{Q_{1_{1,j}}}{Abar} + \frac{Q_{2_{1,j}}}{Abar} + \frac{B_T \cdot M_{T_{1,j}}}{Jbar}$$

	Eq. 8	Eq. 9B	Eq. 9C	Eq. 9D	
$S_{MT} =$	926	1160	1401	0	psi

$$S_{NT} := \frac{C_W \cdot W_{1,5}}{A_T} + \frac{C_L \cdot M_{L_{1,5}}}{Z_T} + \frac{C_N \cdot M_{N_{1,5}}}{Z_T} + \frac{Q_{1_{1,5}}}{Abar} + \frac{Q_{2_{1,5}}}{Abar} + \frac{C_T \cdot M_{T_{1,5}}}{Jbar} \qquad S_{NT} = 314 \frac{lb}{in^2} \qquad \text{Range}$$

$$S_{PT} := K_T \cdot S_{NT} \qquad S_{PT} = 628 \frac{lb}{in^2} \qquad \text{Range}$$

$$S_{NT.ee} := \frac{C_W \cdot W_{1,6}}{A_T} + \frac{C_L \cdot M_{L_{1,6}}}{Z_T} + \frac{C_N \cdot M_{N_{1,6}}}{Z_T} + \frac{Q_{1_{1,6}}}{Abar} + \frac{Q_{2_{1,6}}}{Abar} + \frac{C_T \cdot M_{T_{1,6}}}{Jbar} \qquad S_{NT.ee} = 0 \frac{lb}{in^2} \qquad \text{Peak}$$

MODIFIED CODE EQUATIONS

$B_1 := 0.5$ $\quad B_2 := 1.0$ for straight pipe

EQ. 8

$$B_1 \cdot \frac{P \cdot D_o}{2 \cdot t} + P_{stress_{1,1}} + S_{MT_{1,1}} = 926psi$$

EQ. (9B)

$$B_1 \cdot \frac{P \cdot D_o}{4 \cdot t} + P_{stress_{1,2}} + S_{MT_{1,2}} = 1160psi$$

EQ. (9C)

$$B_1 \cdot \frac{P \cdot D_o}{4 \cdot t} + P_{stress_{1,3}} + S_{MT_{1,3}} = 1401psi$$

EQ. (10)

$$P_{stress_{1,5}} + \frac{S_{PT}}{2} = 314psi$$

CALCULATION OF COMBINED STRESSES AT TEE NODE POINT 395

Purpose:

Calculate the combined stresses at tee Node Point 395 for use in evaluating HELB point locations in accordance with Section 4.0 of this calculation.

Method:

The stresses at tee Node Point 395 are recalculated to remove some of the conservatism in the combined stress of Reference 6 by following Section NC-3651 (a) of the ASME Section III Code, 1986 Edition. The pressure portion of Equation 9 is replaced by the expression provided in the calculations below. All inputs are obtained from the pipe stress analysis (Reference 6).

Calculations:

Deadweight and thermal moments for Tee Node Point 395 are from (Reference 6). The OBE stress is obtained by subtracting the Equation 8 stress from Equation 9 stress provided in the stress summary of Reference 6.

$D := 30 \cdot in$ $\quad t := 0.908\,in$ $\quad D_1 := D - 2 \cdot t$ $\quad D_1 = 28.184\,in$ $\quad P := 1085\,psi$

Section Modulus: $Z := \dfrac{\pi \cdot \left(D^4 - D_1^{\,4}\right)}{32 \cdot D}$ $\quad Z = 585.87\,in^3$

$i := 2.131$ $\quad B_1 := 0.5$ $\quad B_2 := 3.178$

$M_{xdw} := 18210\,ft \cdot lbf$ $\quad M_{ydw} := 751 \cdot ft \cdot lbf$ $\quad M_{zdw} := 169 \cdot ft \cdot lbf$

$M_{xth} := 477483\,ft \cdot lbf$ $\quad M_{yth} := 9415\,ft \cdot lbf$ $\quad M_{zth} := 164225\,ft \cdot lbf$

$\sigma_{eq8} := 10407\,psi$ $\quad \sigma_{eq9} := 17915\,psi$ $\quad \sigma_{obe} := \sigma_{eq9} - \sigma_{eq8}$ $\quad \sigma_{obe} = 7508\,psi$

$$\sigma_{lp} := \frac{P\cdot(D-2\cdot t)^2}{D^2-(D-2\cdot t)^2} \qquad \sigma_{lp} = 8157\text{psi}$$

$$M_A := \sqrt{M_{xdw}^2 + M_{ydw}^2 + M_{zdw}^2} \qquad M_A = 18226\text{ft}\cdot\text{lbf}$$

$$\sigma_{dw} := B_2\cdot\frac{M_A}{Z} \qquad \sigma_{dw} = 1186\text{psi}$$

$$M_C := \sqrt{M_{xth}^2 + M_{yth}^2 + M_{zth}^2} \qquad M_C = 505023\text{ft}\cdot\text{lbf}$$

$$\sigma_{th} := i\cdot\frac{M_C}{Z} \qquad \sigma_{th} = 22043\text{psi}$$

The combined Equation 9 and 10 stresses at Node 395 for use on the stress table of Attachment A are:

$$\sigma_{comb} := \sigma_{lp} + \sigma_{dw} + \sigma_{th} + \sigma_{obc} \qquad \sigma_{comb} = 38895\text{psi}$$

Automated Engineering Services Corp	CALCULATION SHEET Attachment E	Page: E1 of E3
		Calc. No.: PBNP-994-21-05-P01
Client: Florida Power & Light		Revision: 0
Station: Point Beach Nuclear Plant – Unit 1		Prepared By: Chris Kandalepas
Calc. Title: Main Steam Piping GL 87-11 Break Location Determination		Reviewed By: Dan Quijano
Safety Related Yes ☒ No ☐		Date: 9/26/2008

Review of Non-Seismic Supports Loads:

Support No. (Point #)	Load Combination	Global Forces (lb) Fx	Fy	Fz	Comments
EB-2-HA (460)	Deadweight		270		Analyzed Load = 2600 lbs
	Thermal		3841		Maximum Upset Load = 6539 lbs > 2600 lbs
	OBE		2428		Minimum hanger item capacity = 6230 #
	Normal Min		270		Considering factor of safety (FS) = 2 and typical
	Normal Max		4111		catalog FS = 5, therefore, use 2.5 x catolog capacicy
	Upset Min		-2158		= 15500 # > 6539# O.K.
	Upset Max		6539		See Note 5
EB-2-H4 (470)	Deadweight		-4258	-3	Analyzed Load: Fy = 5400 lbs, Fz = 2900 lbs
	Thermal		-98	3309	Max. Upset Load Fy = 4944 lbs < 5400 lbs O.K.
	OBE		588	1451	Max. Upset Load Fz = 4757 lbs > 2900 lbs
	Normal Min		-4356	-3	Minimum hanger item capacity = 4500 #
	Normal Max		-4258	3306	Considering factor of safety (FS) = 2 and typical
	Upset Min		-4944	-1454	catalog FS = 5, therefore, use 2.5 x catolog capacicy
	Upset Max		-3670	4757	= 11250 # > 4757# O.K.
EB-2-H5 (480)	Deadweight		-2649		
	Thermal		-587		Analyzed Load = 4500 lbs
	OBE		533		Maximum Upset Load = 3769 lbs < 4500 lbs O.K.
	Normal Min		-3236		
	Normal Max		-2649		
	Upset Min		-3769		
	Upset Max		-2116		
EB-2-H6 (483)	Deadweight		-2491		
	Thermal		1339		Analyzed Load = 3100 lbs
	OBE		760		Maximum Upset Load = 3251 lbs > 3100 lbs
	Normal Min		-2491		Min. hanger item capacity = 3700 # > 3251 # O. K.
	Normal Max		-1152		
	Upset Min		-3251		
	Upset Max		-392		
EB-2-HB (525)	Deadweight		-3413		Analyzed Load = 4800 lbs
	Thermal		-1321		Maximum Upset Load = 5451 lbs > 4800 lbs
	OBE		717		Minimum hanger item capacity = 4700 #
	Normal Min		-4734		Considering factor of safety (FS) = 2 and typical
	Normal Max		-3413		catalog FS = 5, therefore, use 2.5 x catolog capacicy
	Upset Min		-5451		= 11750 # > 5451 # O.K.
	Upset Max		-2696		
EB-2-H10 (600)	Deadweight		-1178		
	Thermal		366		Analyzed Load = 1075 lbs
	OBE		303		Maximum Upset Load = 1481 lbs > 1075 lbs
	Normal Min		-1178		Minimum hanger item capacity = 2710 # (lug) O.K.
	Normal Max		-812		See Note 2
	Upset Min		-1481		
	Upset Max		-509		

Automated Engineering Services Corp	CALCULATION SHEET Attachment E	Page: E2 of E3
		Calc. No.: PBNP-994-21-05-P01
Client: Florida Power & Light		Revision: 0
Station: Point Beach Nuclear Plant – Unit 1		Prepared By: Chris Kandalepas
Calc. Title: Main Steam Piping GL 87-11 Break Location Determination		Reviewed By: Dan Quijano
Safety Related Yes [X] No [ ]		Date: 9/26/2008

Support No. (Point #)	Load	Global Forces (lb) Fx	Fy	Fz	Comments
EB-2-H11 (702)	Deadweight		-2280		Analyzed Load = 2200 lbs
	Thermal		385		Maximum Upset Load = 2769 lbs > 2200 lbs
	OBE		489		Minimum hanger item capacity = 2710 # (lug) O.K.
	Normal Min		-2280		Considering factor of safety (FS) = 2 and typical
	Normal Max		-1895		catalog FS = 5, therefore, use 2.5 x catolog capacicy
	Upset Min		-2769		= 6775 # > 2769 # O.K.
	Upset Max		-1406		See Note 2
EB-2-H12 (802)	Deadweight		-1177		
	Thermal		513		Analyzed Load = 1200 lbs
	OBE		385		Maximum Upset Load = 1562 lbs > 1200 lbs
	Normal Min		-1177		Minimum hanger item capacity = 2710 # (lug) O.K.
	Normal Max		-664		See Note 2
	Upset Min		-1562		
	Upset Max		-279		
EB-2-H13 (902)	Deadweight		-2269		Analyzed Load = 2300 lbs
	Thermal		646		Maximum Upset Load = 2910 lbs > 2300 lbs
	OBE		641		Minimum hanger item capacity = 2710 # (lug)
	Normal Min		-2269		Considering factor of safety (FS) = 2 and typical
	Normal Max		-1623		catalog FS = 5, therefore, use 2.5 x catolog capacicy
	Upset Min		-2910		= 6775 # > 2910 # O.K.
	Upset Max		-982		See Note 2
EB-2-H17 (1077)	Deadweight		-7228		Analyzed Load = 7200 lbs
	Thermal		7		Maximum Upset Load = 10415 lbs > 7200 lbs
	OBE		3187		Minimum hanger item capacity = 8000 #
	Normal Min		-7228		Considering factor of safety (FS) = 2 and typical
	Normal Max		-7221		catalog FS = 5, therefore, use 2.5 x catolog capacicy
	Upset Min		-10415		= 20000 # > 10415 # O.K.
	Upset Max		-4034		
EB-2-H18 (2005)	Deadweight		-1411		
	Thermal		658		Analyzed Load = 1400 lbs
	OBE		879		Maximum Upset Load = 2290 lbs > 1400 lbs
	Normal Min		-1411		Minimum hanger item capacity = 2710 # O. K.
	Normal Max		-753		Support designed for uplift O.K.
	Upset Min		-2290		See Note 3
	Upset Max		126		
EB-2-H19 (2035)	Deadweight		-315		
	Thermal		348		Analyzed Load = 500 lbs
	OBE		548		Maximum Upset Load = 863 lbs > 500 lbs
	Normal Min		-315		Minimum hanger item capacity = 2710 # (lug) O.K.
	Normal Max		33		Support designed for uplift O.K.
	Upset Min		-863		
	Upset Max		581		

Automated Engineering Services Corp	CALCULATION SHEET Attachment E	Page: E3 of E3
		Calc. No.: PBNP-994-21-05-P01
Client: Florida Power & Light		Revision: 0
Station: Point Beach Nuclear Plant – Unit 1		Prepared By: Chris Kandalepas
Calc. Title: Main Steam Piping GL 87-11 Break Location Determination		Reviewed By: Dan Quijano
Safety Related Yes [X] No [ ]		Date: 9/26/2008

Support No. (Point #)	Load Combination	Global Forces (lb) Fx	Fy	Fz	Comments
EB-2-H20 (3030)	Deadweight		-894		Analyzed Load = 1000 lbs Maximum Upset Load = 1589 lbs > 1000 lbs Minimum hanger item capacity = 2710 # (lug) O.K. See Note 4
	Thermal		-145		
	OBE		550		
	Normal Min		-1039		
	Normal Max		-894		
	Upset Min		-1589		
	Upset Max		-344		
EB-2-H21 (4035)	Deadweight		-330		Analyzed Load = 500 lbs Maximum Upset Load = 773 lbs > 500 lbs Minimum hanger item capacity = 2710 # (lug) O.K. Support designed for uplift O.K. See Note 4
	Thermal		91		
	OBE		443		
	Normal Min		-330		
	Normal Max		-239		
	Upset Min		-773		
	Upset Max		204		
EB-2-H22 (5035)	Deadweight		-907		Analyzed Load = 1300 lbs Maximum Upset Load = 1971 lbs > 1300 lbs Minimum hanger item capacity = 2710 # (lug) O.K. See Note 4
	Thermal		-295		
	OBE		769		
	Normal Min		-1202		
	Normal Max		-907		
	Upset Min		-1971		
	Upset Max		-138		

Where: Normal Min = MIN(DW, DW+TH)
Normal Max = MAX(DW, DW+TH)
Upset Min = Normal Min - OBE
Upset Max = Normal Max + OBE

Notes:

1) Loads obtained from Shaw Group pipe analysis (Ref. 6), considering EPU conditions, are used in the load combinations. The S&L support qualification (Ref. 7) is used as the basis for the review of these non-seismic supports.
2) Per Ref. 7 supports EB-2-H10, -H11, -H12, and -H13 are ganged to the same auxiliary steel. Aux. steel analysis shows maximum member I.C. = 0.552. Considering worst increase of 38% for hanger EB-2-H10 (1481/1075 = 1.38) the maximum I.C. = 1.38x0.552 = 0.76 < 1.0 O.K. Also, reactions are small and welds & embedded inserts are OK.
3) Per Ref. 7 support EB-2-H18 is attached to aux. steel that spans between two embedded channels. The aux. steel analysis shows significant margins available. Considering increase of 64% for EB-2-H18 worst case stress becomes: 9.0 ksi x 1.64 = 14.76 ksi < 23.76 ksi O.K.
4) Per Ref. 7 supports EB-2-H20, -H21, and -H22 are ganged to the same auxiliary steel. A single frame is installed to take the uplift forces for all supports. The down load is supported separately by each hanger. Since the uplift of 204# (EB-2-H21) is small the supports are evaluated separately as shown above.
5) Support EB-2-HA is a non-seismic support (rod hanger) and cannot withstand uplift forces. The upward load of 6539# will be distributed to adjacent supports EB-2-H3 and EB-2-H4 which are loaded downwards and can accommodate the subject uplift load.

TECHNICAL POSITION PAPER
FOR ESTABLISHING
HELB BREAK & LEAKAGE CRACK LOCATION SELECTION CRITERIA

Rev. 0, December 4, 2006
Rev. 1, August 7, 2008

Calc. No. PBNP-994-21-05-P01, Rev. 0
Attach. F, Page F1

1.0 Introduction

Point Beach currently utilizes different Pipe Break Outside Containment (PBOC) location selection criteria in the HELB Program and EQ Program in regards to environmental parameters. The HELB Reconstitution Program (Program), as currently envisioned, will prepare documented calculations for the pressure, temperature and humidity time histories for a variety of HELB scenarios. Since the Program will reconstitute the design basis for PBOC and the resultant event environment outside Containment, these environmental parameters would be equally applicable and used as the input to the EQ Program. With this approach PBNP will have a single unified HELB approach to address impacts on EQ and structural effects including compartment pressures and temperatures, jet impingement, pipe whip among others

Before proceeding with the Program, a major consideration needs to be addressed and agreed upon by PBNP. This involves the adoption of Generic Letter 87-11 and its associated NRC Mechanical Engineering Branch Technical Position, MEB 3-1, Revision 2. Considerable discussions have taken place in the past on the extent and use of GL 87-11 and its associated MEB 3-1, Rev. 2. Currently, PBNP EQ Program uses a variation of the MEB 3-1 document involving the use of the combined stress threshold for break location of $0.8(1.2\ S_h + S_A)$ to establish the EQ parameters (Reference 4, 5). It is noted that Revision 1 of MEB 3-1 stipulates the above break location threshold limit.

The PBNP FSAR Appendix A.2 (Reference 2) states "Break locations are selected in accordance with Reference 1. Consideration of arbitrary intermediate pipe ruptures is no longer required per NRC Generic Letter 87-11." The Reference 1 stated in the foregoing quotation is the Giambusso Letter of December 19, 1972. The Giambusso criteria included the threshold limit of $0.8(S_h+S_A)$ and other requirements.

PBNP HELB DBD T-47 (Reference 6) provides a detailed discussion of the background history for the break location criteria. Without repeating these details, it is appropriate to state that the HELB location criteria have evolved over the years and there is a realization that these sets of criteria are "non-mechanistic" in nature. In other words, even though the pipe is designed to all design and analysis rules, additional precautions were imposed to provide added assurance for designing the plant SSCs against postulated pipe breaks. To provide a basis for establishing break locations, the AEC and NRC staff promulgated rules that tied these location selections to the stresses in the piping system. As the ASME Section III Piping Code equations (specifically Equations 9 and 10) (Reference 10) evolved so has the break location stress threshold limits. These changes in the break location criteria have led to the numerous discussions cited in the HELB DBD and the differences in the criteria used in the EQ Program and the FSAR citation.

Calc. NO. PBNP-994-21-05-P01, Rev. 0

2.0 Line Characterization Criteria and Break Selection Rules

Attach. F, Page F2

It is noted that the criteria for the identification of HE lines outside containment (Design pressure>275 psi and service temperature > 200°F) and the fact that the current licensing bases of most vintage plants, including PBNP, do not recognize moderate energy lines, are separate and distinct criteria that should not be linked to the break location selection. In other words, changes to the HE break location selection criteria do not automatically require the re-visitation of the criteria for high and moderate energy line characterization. In fact, SRP 3.6.2, GL87-11 and MEB 3-1, Rev. 2 do not address the line characterization criteria, which is reviewed in SRP 3.6.1.

Since the line characterization for line breaks remains the same as stated in the FSAR, the section of MEB 3-1, Rev. 2 pertaining to moderate energy lines do not apply since the PBNP licensing basis does not characterize lines in this category. Similarly, the HE line definition for PBNP remains unchanged and only the lines that satisfy the "and" criteria and the "normally depressurized" rule need to be included in the HELB Program.

3.0 Proposed Unified PBOC Criteria for the PBNP HELB Reconstitution Program

The following criteria for the Pipe Break Outside Containment (PBOC) are proposed for the HELB Reconstitution Program. Adoption and use of this set of criteria will be across all PBNP Programs (EQ, HELB and others).

3.1 Retain the definition that all lines outside containment are designated as ASME Section III Class 2 and 3 as stated in the FSAR, Appendix A.2 and DG-M09 (Reference 9).

3.2 Retain the current definitions for HE lines, which does not require the characterization of lines for moderate energy.

3.3 Adopt the use of GL 87-11 and MEB 3-1, Rev. 2 rules for HE lines only including the rules for break and leakage crack location selection in their entirety. These rules utilize the 1986 ASME Code Equations 9 and 10 with the use of stress indices for dead weight and OBE resultant moments (B_2 indices) and longitudinal pressure (B_1 indices) and stress intensification factors (i) for thermal expansion only. It is noted that the pipe stress analyses compute the resultant moments for the load cases. These resultant moments are independent of which Design Code is used. The code equations or in this case of establishing the break locations, the combined stress equation are computed from the stress resultants based on the specific formulations.

3.4 In addition, IN 2000-20 (Reference 7) clarifies the requirement of postulating a single open crack at the location most damaging to those essential structures and systems.

3.5 Types of breaks and cracks should be in accordance with the MEB 3-1 Section B.3.

3.6 When break criteria are based on stress calculation, it is recommended that breaks and cracks be based on the calculated stresses (Section B.1.c(2)(b)(ii)) and not at each pipe fitting (Section B.1.c(2)(b)(i)) of MEB 3-1, Rev. 2. The stress requirement of Section B.1.c(2)(b)(ii) should be based on the primary piping stress evaluation (Section NC/ND-

3653 of the ASME Code Section III) and local stresses at the integral welded attachments(IWA), where applicable.

3.7 Where breaks locations are selected without the benefit of stress calculations, it is recommended that breaks be postulated at the piping welds to each fitting, valve, or welded attachment.

Calc. No. PBNP-994-21-05-P01, Rev. 0
Attach. F, Page F3

4.0 Regulatory & Licensing Issues

Use of the MEB 3-1 equations to determine break and crack locations does not require prior NRC approval. The 50.59 process and changes to the FSAR would be required.

In order to be compatible with the activities previously performed for the EQ Program, a 50.59 Screening/Evaluation should be performed to accept the use of the of the proposed PBOC criteria for determining break and crack locations.

The proposed PBOC criteria has the potential of eliminating all intermediate large breaks and almost all small breaks (leakage cracks), except the one (single) mandatory crack at the most adverse location. The 50.59 Screening/Evaluation should also address the elimination of the longitudinal crack at the terminal ends required by the Giambusso letter, but eliminated by MEB 3-1.

5.0 Conclusion

The above approach would result in a single unified set of HELB/EQ criteria that would be applicable to all HELB related design parameters for the evaluation plant SSCs. The possible elimination of large breaks should result in lower environmental loads (compartment pressure and temperature) that would result in increasing design margins for the plant SSCs.

The HELB Reconstitution Program will utilize the Proposed PBOC Criteria and systematical address and documents the analysis and results in the various tasks outlined in the Task 1 Report (Reference 8)

6.0 References

1. "General Information Required for Consideration of the Effects of a Piping System Break Outside of Containment", AEC December 19, 1972 (Giambusso Letter)
2. PBNP FSAR Appendix A.2, High Energy Pipe Failure Outside Containment
3. USNRC Generic Letter GL 87-11, Relaxation in Arbitrary Intermediate Pipe Rupture Requirements and associated Revised MEB 3-1 of SRP 3.6.2
4. PBNP Calculation M-09334-357-HE.1
5. PBNP Calculation M-09334-357-HE.2, Rev. 01, High Energy Line Breaks in Selected Piping Systems
6. PBNP HELB DBD T-47, High Energy Line Break Design Basis Document, Rev. 0
7. USNRC Information Notice 2000-20, Potential Loss of Redundant Safety-Related Equipment Because of the Lack of High-Energy Line Break Barriers
8. AES Corp. PBNP HELB Reconstitution Program Task 1 Report, Rev. 0.
9. PBNP Design Guide DG-M09, Rev. 2, Design Requirements for Pipe Stress Analysis.
10. ASME B & PV Code Section III, Subsections NC and ND, 1986 Edition.