ENCLOSURE 1
ATTACHMENT 2

NEXTERA ENERGY POINT BEACH, LLC
POINT BEACH NUCLEAR PLANT, UNITS 1 AND 2

LICENSE AMENDMENT REQUEST 261
EXTENDED POWER UPRATE
RESPONSE TO REQUEST FOR ADDITIONAL INFORMATION

PBNP-994-21-02, REVISION 0, HELB RECONSTITUTION PROGRAM - TASK 2, HIGH ENERGY SYSTEM SELECTION

30 pages follow

TABLE OF CONTENTS

Item		Page
1.0	Purpose and Summary Results	5
2.0	Methodology	6
3.0	Acceptance Criteria	7
4.0	Assumptions	7
5.0	Design Inputs	7
6.0	Design Calculations	8
7.0	Conclusions	10
8.0	Attachments	10

1.0 Purpose and Summary Results:

The purpose of this calculation is to document the selection of piping systems, or portions thereof, outside containment that meet the definition of high energy lines for the Point Beach Nuclear Plant.

Item 1 of the attachment to the AEC letter to WEP dated December 19, 1972 [DI 5.1], describes, in part, piping system conditions that do not require evaluation for pipe whip – "... need not be provided if any of the following conditions will exist:

(a) Both of the following piping system conditions are met:

(1) the service temperature is less than 200° F; and

(2) the design pressure is 275 psig or less"

This would indicate that if either condition was not met, the system would be considered "high energy". Conventionally, this has been called a "pressure or temperature" plant. At clarification meetings on January 4, 1973 (Prairie Island) and January 5, 1973 (Kewaunee), it was agreed that the licensing basis for a high energy line for both plants would be as stated in Enclosure 1, Request No. 9.29.6(a) of the January 11, 1973 AEC letter [DI 5.2] to NSP, which is included below. AEC letter dated January 18, 1973 to WPS [DI 5.3] stated that the agreements reached at the NSP meeting also applied to WPS. There is no indication that these clarifications were ever transmitted to Point Beach. However, the AEC SER [DI 5.4] for Point Beach stated that "pressure and temperature" defined high energy piping systems.

Question: Should the pipe design pressure and temperature conditions specified be used only to identify those pipes that would require pipe whip protection or should they be used to identify pipes carrying a high energy fluid that if ruptured would require protection to meet any of the criteria, including pipe whip criteria?

Answer: The pipe design pressure and temperature conditions should be used to identify high energy fluid pipes for use with any of the criteria. For example, the charging line is not considered to be a high energy line for these criteria, because service temperature is less than 200° F.

Point Beach FSAR Appendix A.2 [DI 5.14] states "High energy piping systems are defined as systems where the combined pressure and temperature conditions of the fluid exceeds 275 psig and 200° F. It should be

noted that a more accurate definition would be "those having a service temperature of 200° F and above and a design pressure above 275 psig." HELB Task 20 will revise FSAR Appendix A.2 accordingly.

The result of the original selection of systems is documented in FSAR Appendix A.2.2.12, which identified four systems (main steam, feedwater, steam generator blowdown and sampling system). It is not known why the sampling system was included. FSAR Appendix A.2.9 identifies these lines to be 3/8", which should have been excluded by the provisions of Item 3 of the enclosure to the December 19, 1972 AEC letter. No documentation has been located that would adequately explain why CVCS letdown was not identified.

FSAR Appendix A.2 discussed systems that traversed the Primary Auxiliary Building, but did not address any potential high energy systems in the Turbine Building.

This calculation identifies all systems, or portions thereof, outside of containment that meet definition of high energy and size criteria. Excluded from review were systems that are not normally operating systems (i.e. Safety Injection, Containment Spray, Residual Heat Removal, Auxiliary Feedwater Pump Discharge, Chemical Injection, etc.) and piping systems 1" and smaller (i.e. sampling, hydrogen, nirogen, etc.). Table 6.0-1 contains all piping systems whose design pressure is greater than 275 psig and their associated service (operating) temperature. Those systems, or portions thereof, are identified in the table as meeting the high energy criteria are:

Main Steam (MS)	Feedwater (FW)
CVCS Letdown (CV)	Steam Generator Blowdown (SB)
Condensate (CS)	Heater Drain Tank Pump Discharge (FD)
Extraction Steam (EX)	Heater and Reheater Vents & Drains (FD & MSR)

2.0 Methodology:

The applicable flow diagrams, piping design tables contained in Westinghouse Piping Class Summary DG-M02 (piping Classes 301 and higher) [DI 5.5], Bechtel Piping Class Summary DG-M03 [DI 5.6] and Stone and Webster Piping Class Summary DG-M04 [DI 5.7] were reviewed to determine which piping systems, or portions thereof, had design pressures greater than 275 psig. For those identified, their operating temperatures were determined from a combination of Heat Balance Drawings [DI 5.8 and 5.9], CVCS Temperature Documents [DI 5.10 and 5.11], Operating Procedure [DI 5.12], Operating Instructions [DI 5.18], Steam Tables [DI 5.13] and Final Safety Analysis Report [DI 5.14] as discussed in Section 6.0 of this calculation. Operating temperatures were identified for two NSSS power levels (1545 MWt and 1806 MWt). Design Input 5.19 documents that no new systems or lines became high energy due to EPU conditions. Item 3 of the attachment to Design Input 5.1 excludes

postulating longitudinal and circumferential breaks in piping runs 1" nominal pipe size and smaller. Throughout Design Input 5.1, terms such as "normal operation" are used. Historically, systems that are not normally operating have not been evaluated for HELB events, even if they meet the pressure and temperature criteria when they are running. Start-up and shutdown are assumed to be too infrequent to be considered normally operating. This calculation and FSAR Appendix A.2 address hot shutdown and power operation for HELB events.

3.0 Acceptance Criteria:

The acceptance criteria for this calculation is compliance with the requirements of the December 19, 1972 AEC letter as clarified in January 1973, the AEC SER and FSAR Appendix A.2.

4.0 Assumptions

The piping class summaries, heat balance drawings, CVCS temperatures, FSAR, steam tables, etc. utilized are correct and representative of plant design and operating conditions.

The operating temperatures for main steam and steam generator blowdown are at hot shutdown conditions and the remaining systems are at full power operation.

5.0 Design Inputs:

5.1 AEC letter to WEP dated December 19, 1972, A Giambusso to JG Quale

5.2 AEC letter to NSP dated January 11, 1973, A Giambusso to AV Dienhart, minutes of January 4, 1973 meeting

5.3 AEC letter to WPS dated January 18, 1973, A Giambusso to EW James, minutes of January 5, 1973 meeting

5.4 AEC Safety Evaluation Report

5.5 Westinghouse Piping Class Summary, DG-M02, Revision 10

5.6 Bechtel Piping Class Summary, DG-M03, Revision 18

5.7 Stone & Webster Piping Class Summary, DG-M04, Revision 2

5.8 Heat Balance Diagram, 125225-HB(S)-101-1, 04/17/08, 1546.6 MWt

5.9 Heat Balance Diagram, 125225-HB(S)-300-5, 4/17/08, CEIT-42.6, 1806 MWt

5.10 CVCS Letdown Temperature Trend Spread Sheet, October – November, 2007

5.11 CVCS Letdown Temperature – e-mail, Kusnir and Agan, 7/11/08

5.12 Operating Procedure OP-5E, Revision 8

5.13 Thermodynamic Properties of Steam, JH Keenan and FG Keyes, Thirty-Secon Printing

5.14 Final Safety Analysis Report, Appendix A.2, Revision 6/07

5.15 DIT-PB-EPU-08-0015, dated 2/18/08

5.16 DIT-PB-EPU-AES-0001, dated 4/28/08

5.17 DIT-PB-EPU-AES-0005, dated 7/10/08

5.18 Operating Instruction 14, Revision 32, Section 3.3.7.a

5.19 DIT-PB-EPU-AES-0009, dated 10/7/08

6.0 Design Calculations:

Attached Table 6.0-1 identifies all piping systems, or portions thereof, that have design pressures above 275 psig and their associated operating temperature. The following calculations provide discussions for the selection process.

6.1 Extraction Steam (EX)

6.1.1 The design pressure for these lines was obtained from the P&IDs and DI 5.6

6.1.2 The operating temperature for these lines was obtained from DIs 5.8 and 5.9

6.2 Condensate (CS)

6.2.1 The design pressure for these lines was obtained from the P&IDs and DI 5.6

6.2.2 The operating temperature for these lines was obtained from DIs 5.8, 5.9 and 5.18

6.3 Chemical and Volume Control (CV)

6.3.1 The design pressure for these lines was obtained from the P&IDs and DI 5.5

6.3.2 The temperature for the letdown lines was obtained from DIs 5.10 and 5.11

6.3.3 The temperature for the charging pump discharges to the containments was obtained from DI 5.12

6.4 Feedwater (FW)

6.4.1 The design pressure for these lines was obtained from the P&IDs and DI 5.6

6.4.2 The operating temperature for these lines was obtained from DIs 5.8 and 5.9

6.5 Heater Drains Pump Discharge, Heater Drains & Vents (FD)

6.5.1 The design pressure for these lines was obtained from the P&IDs and DI 5.6

6.5.2 The operating temperature for these lines was obtained from DIs 5.8 and 5.9

6.6 Main Steam (MS)

6.6.1 The design pressure for these lines was obtained from the P&IDs and DI 5.6

6.6.2 The operating temperature for these lines was obtained from the steam tables assuming saturated steam at hot standby pressure conditions (1005 psig)

6.7 Moisture Separator Reheater (MSR)

6.7.1 The design pressure for these lines was obtained from the P&IDs and DI 5.6

6.7.2 The operating temperature for these lines was obtained from DIs 5.8 and 5.9

6.8 Steam Generator Blowdown (SB)

6.8.1 The design pressure for these lines was obtained from the P&IDs and DI 5.6

6.8.2 The operating temperature for the lines from the containment penetration to the SGB heat exchangers and the flash tank angle valves was obtained from the steam tables assuming a saturated liquid at hot standby pressure conditions (1005 psig).

7.0 Conclusions:

This calculation concluded that the original selection of high energy systems identified in the FSAR were correct for the Primary Auxiliary Building, except for the sampling system and CVCS letdown lines. However, the FSAR does not identify the high energy systems in the Turbine Building.

The attached Table 6.0-1 identifies those systems, or portions thereof, that traverse the Facade, Primary Auxiliary Building and Turbine Building and meet the definition of high energy.

8.0 Attachments:

8.1 Design Input 5.8, Heat Balance at 1546.6 MWt

8.2 Design Input 5.9, Heat Balance at 1806.0 MWt

8.3 Design Input 5.10, CVCS letdown temperature trend spread sheet

8.4 Design Input 5.2, AEC letter to NSP

8.5 Design Input 5.3, AEC letter to WPS

8.6 Design Input 5.17, CVCS Letdown Temperature

8.7 Design Input 5.17, DIT-PB-PB-EPU-AES-0005

POINT BEACH NUCLEAR PLANT
HELB RECONSTITUTION PROGRAM
TASK 2 - TABLE 6.0-1
HIGH ENERGY SYSTEM SELECTION

SYSTEM	PIPING CLASS	DESIGN PRESS, PSIG	1545 MWt OPER TEMP DEGS F	1806 MWT OPER TEMP DEGS F	HIGH ENERGY Y/N	DESCRIPTION
EX-1	GD-1	400	438	461	Y	High pressure turbine to #5 heaters
CS-1	GB-4	400	83	91	N	CS pumps to #1 heaters
CS-2	GB-4	400	154	166	N	#1 heaters to #2 heaters
CS-3	GB-4	400	205	215	Y	#2 heaters to #3 heaters
CS-4	GB-4	400	272	284	Y	#3 heaters to #4 heaters
CS-5	GB-4	400	347	361	Y	#4 heaters to feedwater pump suctions
CS-6	GB-4	400	83	91	N	Recirculation to control valve to condensate storage tanks
CS-7	GB-4 & 6	400	83	91	N	Condensate pumps to various pumps
CS-8	GB-4	400	83	91	N	Condensate to air ejectors, etc.
CS-9	GB-1 & 8	370 & 400	83	91	N	To SGB heat exchangers
CS-10	GB-8	400	325	320	Y	From SGB heat hxchangers
CV-1	CH-601R-1	700	280	280	Y	Containment to non-regenerative heat exchangers
CV-2	CH-601R-1	700	115	115	N	Down stream of non-regenerative heat exchangers
CV-3	CH-2502R-1	2735	110	110	N	Charging pump discharges to containment
FW-1	DB-1	1525	351	365	Y	Feedwater pumps to #5 heaters
FW-2	DB-1	1525	431	457	Y	#5 heaters to containment
FW-3	GB-2	1525	351	365	Y	Feedwater pump recirculation to condensers
FD-1	GB-5 & GB-3	370	359	375	Y	#5 heaters to control valve to #4 heaters and condensers
FD-2	GB-3	517	352	365	Y	Heater drain pumps to feedwater pump suction
FD-3	HB-5	550	278	289	Y	#3 heater vents
FD-4	HD-5	550	351	366	Y	#4 heater vents
MS-1	EB-1 & 8	1085	547	547	Y	From containment to various services
MSR-1	GB-2	1085	511	507	Y	Reheater drains to #5 heaters and condensers
SB-1	EB-12	1085	547	547	Y	Containment to angle valves & heat exchangers

7208 1180

UNITED STATES
ATOMIC ENERGY COMMISSION
WASHINGTON, D.C. 20545

RECEIVED
JAN 15 1973

January 11, 1973

Docket Nos. 50-282
50-306

CALCULATION PBNP-994-21-02
REV. 0

ATTACHMENT 8.4
PAGE 1 OF 2

Mr. A. V. Dienhart
Vice President - Engineering
Northern States Power Company
414 Nicollet Avenue
Minneapolis, Minnesota 55401

Dear Mr. Dienhart:

In our meeting of January 4, 1973, you requested clarification of the guidelines and criteria enclosed with our December 12, 1972 letter regarding a postulated break in a pipe carrying a high-energy fluid in the Prairie Island Nuclear Generating Plant, Units 1 and 2.

The enclosed clarifications are a result of the staff's review of the questions discussed in the January 4, 1973 meeting, and should be used in the preparation of design modifications of your facility to accommodate the postulated pipe break. The major clarifications are that supplemental guidelines are provided regarding (a) the location of postulated breaks in addition to locations specified in Request No. 9.29.7 and (b) protection of safety-significant systems from adverse environments in addition to that specified in 9.29.11(a).

We understand from the meeting of January 4, 1973 that you plan to provide an amendment to the application describing your proposed modifications by February 1, 1973. Please inform us within 7 days after receipt of this letter if your plans for filing the amendment have changed.

Sincerely,

A. Giambusso, Deputy Director
for Reactor Projects
Directorate of Licensing

Enclosure:
As stated

ENCLOSURE

NSP requested interpretation of the AEC guidelines attached to the December 12, 1972 letter to them requesting consideration of the postulated accident. The questions raised by NSP and the staff's response is summarized below. Request numbers refer to the AEC guidelines.

Request No. 9.29.6(a)

Question: Should the pipe design pressure and temperature conditions specified be used only to identify those pipes that would require pipe whip protection or should they be used to identify pipes carrying a high energy fluid that if ruptured would require protection to meet any of the criteria, including pipe whip criteria?

Answer: The pipe design pressure and temperature conditions should be used to identify high energy fluid pipes for use with any of the criteria. For example, the charging line is not considered to be a high energy line for these criteria, because service temperature is less than 200°F.

Request No. 29.6(d)

Question: Does Note 1 for this paragraph mean that the steam flow limiter may be considered to reduce the force acting on the section of pipe containing the limiter? For example, does the force equal 1.2 x fluid pressure x nozzle throat area?

Answer: Note 1 does mean that the steam flow limiter may be considered; however, the magnitude of the coefficient in the force equation is subject to analysis.

Request No. 9.29.7 b (2)

Question: Should the coefficient of the algebraic expressions in this paragraph be 0.8, as in the Prairie Island criteria, or 0.9 as in the Monticello criteria?

Answer: 0.8 is correct.

CALCULATION PBNP-99421-02
REV. 0
ATTACHMENT 8.5
PAGE 1 OF 2

Local PDR

UNITED STATES
ATOMIC ENERGY COMMISSION
WASHINGTON, D.C. 20545

Docket No. 50-305

January 18, 1973

MEMORANDUM FILE

KNI-93

R. C. DeYoung, Assistant Director for Pressurized Water Reactors, L HELB
THRU: Karl Kniel, Chief, PWR Project Branch No. 2, L KK

MEETING WITH WISCONSIN PUBLIC SERVICE CORPORATION - KEWAUNEE NUCLEAR POWER PLANT

Enclosed is a summary of significant results of a meeting held with representatives of the Wisconsin Public Service Corporation on January 5, 1973, to discuss potential problems with the rupture outside containment of lines carrying high energy fluids. Persons present during the meeting are indicated in the attendance list.

L. P. Crocker, Project Manager
PWR Project Branch No. 2
Directorate of Licensing

Enclosures:
1. Meeting Summary
2. Revisions to Criteria
3. Additional Staff Position
4. Attendance List

MEMORANDUM FIL

ENCLOSURE NO. 1

WISCONSIN PUBLIC SERVICE CORPORATION

KEWAUNEE NUCLEAR POWER PLANT

DOCKET NO. 50-305

MEETING NOTES OF JANUARY 5, 1973

A meeting was held on January 5, 1973 with representatives of the Wisconsin Public Service Corporation to discuss the potential for, and problems associated with, the rupture outside containment, of a line carrying high-energy fluid. The meeting was a follow-on to a previous meeting on the same subject held on November 16, 1972 and was in specific response to our letter of December 15, 1972 which provided criteria to be considered for the design of high-energy fluid systems outside containment.

The meeting was held at the request of the applicant to discuss the results of the applicants' stress analyses of the piping runs, the postulated break points in these piping runs together with the rationale for selection of these break points, and the applicant's interpretation of the criteria included with our December 15 letter. A meeting had been held the previous day on the same subject with the Northern States Power Company regarding the Prairie Island Nuclear Generating Plant. Since the architect-engineer (Pioneer Service & Engineering Co.) designed both Kewaunee and Prairie Island many items resolved at the Prairie Island meeting were equally applicable to Kewaunee.

The meeting began by having one of the representatives of Pioneer Service & Engineering Co. summarize the alterations to the criteria forwarded with the December 15 letter that had been agreed to the previous day. For the most part, these alterations were made to clarify the intent of the criteria, although one substantive change was made. These revisions are shown at Enclosure 2.

Starting with these revised criteria as a basis, the applicant described the steam line and branch line locations using an isometric drawing of the layout of the steam lines and presented his stress analyses of the main steam piping systems. The analyses indicated that the Kewaunee main steam line stresses are well within the allowable stresses for such lines. On the basis of these analyses, however, the applicant had selected those points where the stresses were highest as the postulated break points for the piping runs, in accordance with the criteria contained in our December 15 letter.

Agan, Charles E.

From: Kusnir, Michael [MICHAEL.KUSNIR@fpl.com]
Sent: Friday, July 11, 2008 1:18 PM
To: Agan, Charles E.
Subject: RE: Heads Up for PB DITs

Charles,

I would agree with your logic.

Mike Kusnir
~~Point Beach EPU Project~~
920-755-7563

From: Agan, Charles E. [mailto:Charles.Agan@xenuclear.com]
Sent: Friday, July 11, 2008 12:56 PM
To: Kusnir, Michael
Cc: Reiff, Mark; Doc Setlur
Subject: RE: Heads Up for PB DITs

Mike:

The temperature values we were looking for are upstream and downstream of the non-regenerative heat exchanger. Since there is only a minor increase (0.7 deg F) from the cold leg to the regenerative heat exchanger, we will use the temperatures at the current rating.

Thank you,

Charles

From: Kusnir, Michael [mailto:MICHAEL.KUSNIR@fpl.com]
Sent: Wednesday, July 09, 2008 4:40 PM
To: Agan, Charles E.
Cc: Reiff, Mark
Subject: Heads Up for PB DITs

Charles,

Today I gave 2 DITs to our Admin staff to send these 2 DITs. I have attached the unsigned version here. The one has 5 attachments. I will not send all of them here except for the current plant Heat Balance to confirm that it fulfills what you need.

If you don't see official DITs by Friday, give me a holler.

Mike Kusnir
Point Beach EPU Project
920-755-7563

CALCULATION PBNP-994-21-02
REV. 0
ATTACHMENT 8.7
PAGE 1 OF 1

Point Beach EPU Project
Design Information Transmittal (DIT)

From: Point Beach – EPU Project - Mike Kusnir

To: AES Inc. – Doc Setlur, Mark Reiff, Charles Agan

Mod or Tracking Number: n/a Date: 7/9/08 DIT No: DIT-PBU-EPU-08-AES-0005

Mod Title: Analysis of Main FW & Main Steam Line HELB Outside Containment

Plant: Point Beach Unit 1 ☒ Unit 2 ☒ Common ☐ Quality Classification: SR

SUBJECT: This DIT transmits the CVCS Letdown Temperature estimated to exist after power uprate to 1806 MWt.

Check if applicable:

☐ **This DIT confirms information previously transmitted on_____ by _____.**

☒ **This information is preliminary. See explanation below.**

SOURCE OF INFORMATION (Source documents should be uniquely identified)

The information contained in this DIT was obtained from EPU WECAIR Item 3.5.57, which used WEC Power Uprate Feasibility Study WEP-07-21 Table 4.2.1.1-2 Case 4.

DESCRIPTION OF INFORMATION: The following information is considered best available. The temperature value is derived from analysis as opposed to actual field measurement.

Letdown flow is via the RCS cold leg. The current cold leg temperature value (pre-uprate) is 542.0 deg F, and this will increase to 542.7 deg F after power uprate to 1806 MWt.

DISTRIBUTION (Recipients should receive all attachments unless otherwise indicated. All attachments are uncontrolled unless otherwise indicated)

There are no attachments to this DIT.

PREPARED BY (The Preparer and Approver may be the same person.)

Preparer Name	Position	Signature	Date
Mike Kusnir	EPU Mech Engineer	MA Kusnir	7-9-08

APPROVED BY (The cognizant Engineering Supervisor has release authority. Consult the Design Interface Agreement or local procedures to determine who else has release authority.)

Approver Name	Position	Signature	Date
Lawrence Tobin	EPU Design Supervisor	[illegible]	7-10-08

A copy of the DIT (along with any attachments not on file) should be sent to the modification file

CALCULATION PBNP-994-21-02
REV. 0
ATTACHMENT 8.1

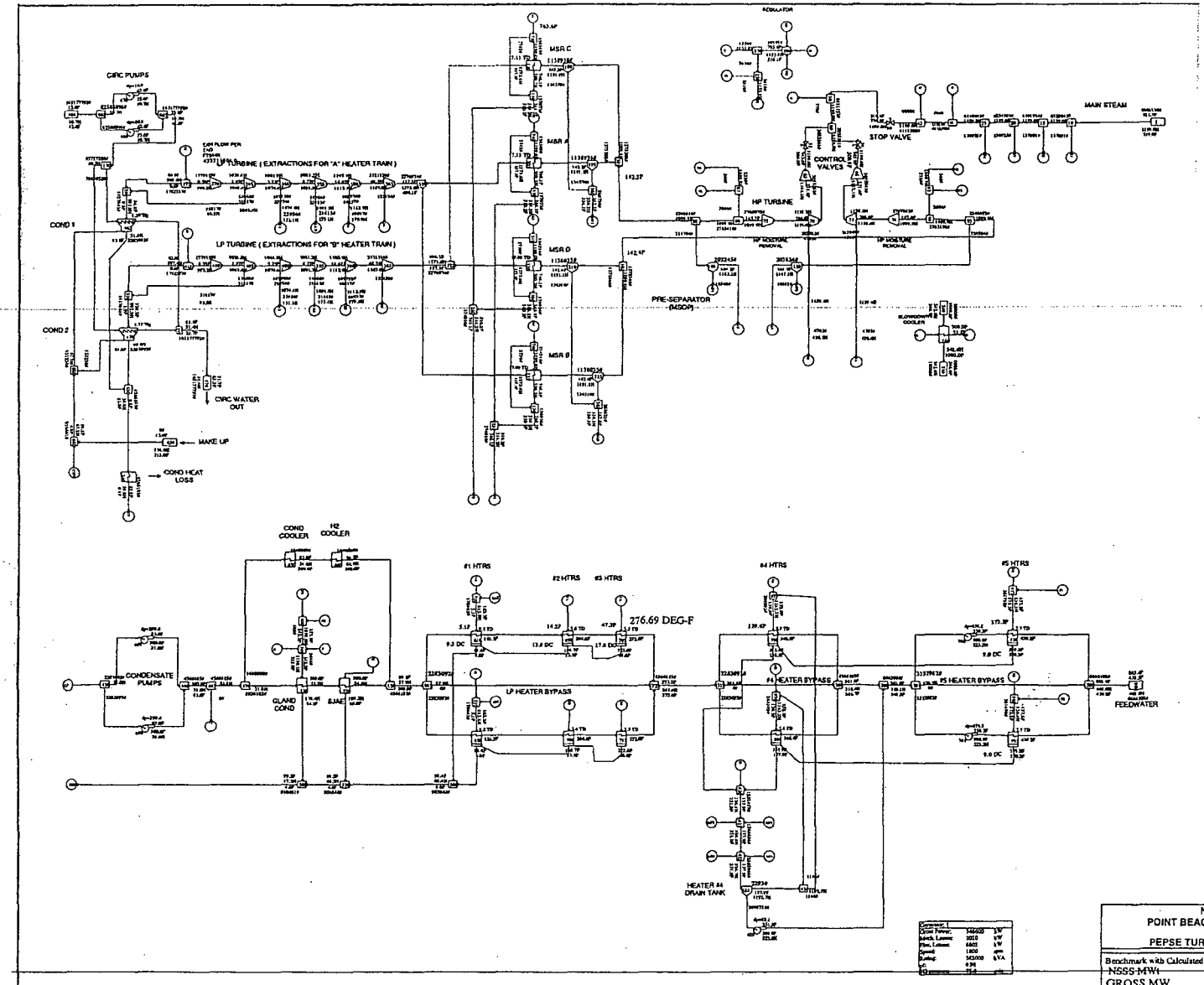

NMC- FPL	
POINT BEACH NUCLEAR PLANT	
PEPSE TURBINE CYCLE MODEL	
Benchmark with Calculated Extraction Steam DP	
~~NSSS MWt~~	~~1544.5 MWt~~
GROSS MW	546.6 MW
DWG 129235-HB(5)-101-1	04/17/04

CALCULATION PBNP-984-21-02
REV.0
ATTACHMENT 8.2

New HP Inlet DP, Calcd Ext Steam DP, Siemens HPT, CWIT 42.6F

GROSS MW 637.5 MW

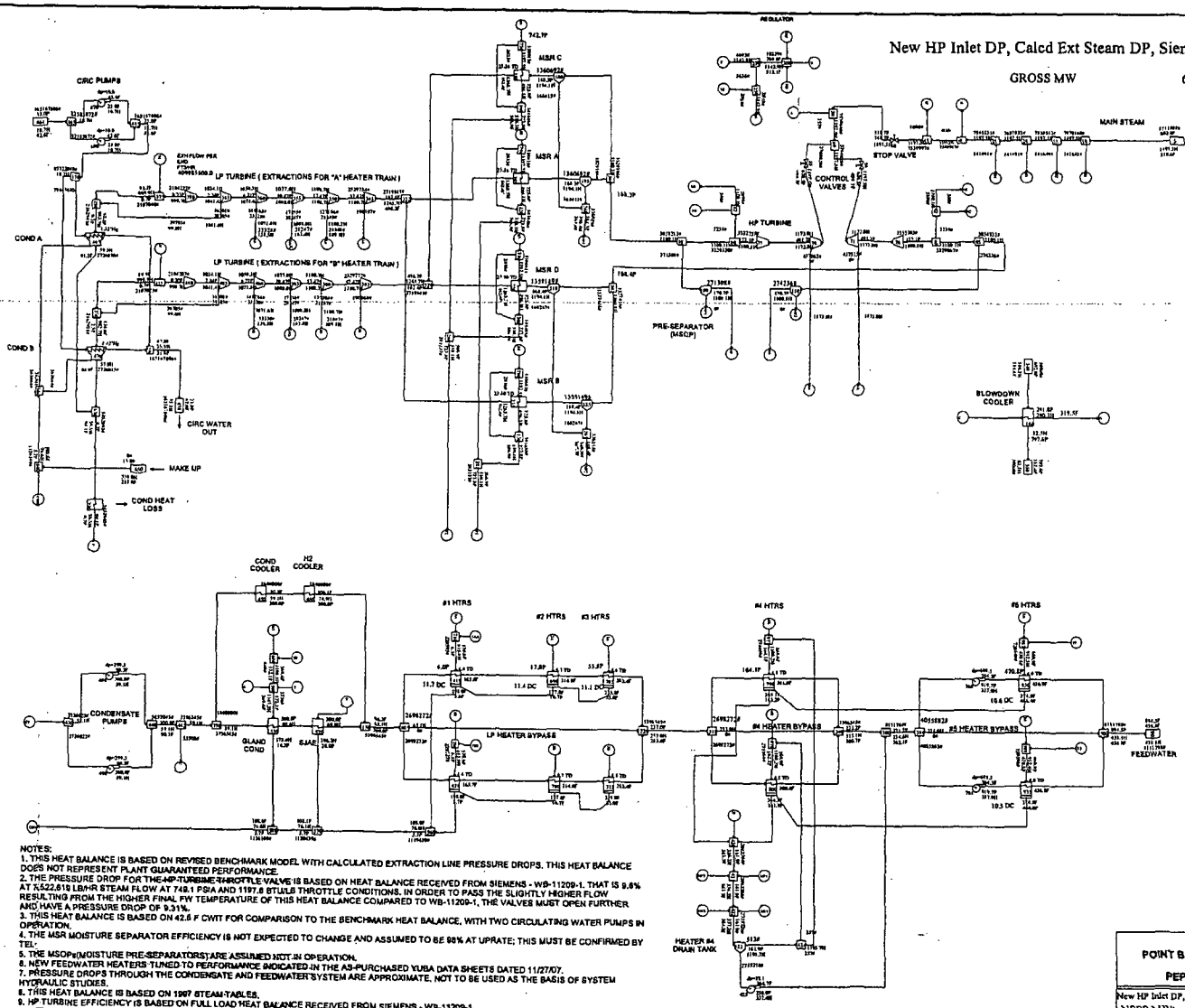

NOTES:
1. THIS HEAT BALANCE IS BASED ON REVISED BENCHMARK MODEL WITH CALCULATED EXTRACTION LINE PRESSURE DROPS. THIS HEAT BALANCE DOES NOT REPRESENT PLANT GUARANTEED PERFORMANCE.
2. THE PRESSURE DROP FOR THE HP TURBINE THROTTLE VALVE IS BASED ON HEAT BALANCE RECEIVED FROM SIEMENS - WB-11209-1. THAT IS 9.6% AT 5,522,819 LB/HR STEAM FLOW AT 748.1 PSIA AND 1197.8 BTU/LB THROTTLE CONDITIONS. IN ORDER TO PASS THE SLIGHTLY HIGHER FLOW RESULTING FROM THE HIGHER FINAL FW TEMPERATURE OF THIS HEAT BALANCE COMPARED TO WB-11209-1, THE VALVES MUST OPEN FURTHER AND HAVE A PRESSURE DROP OF 9.31%.
3. THIS HEAT BALANCE IS BASED ON 42.6 F CWIT FOR COMPARISON TO THE BENCHMARK HEAT BALANCE, WITH TWO CIRCULATING WATER PUMPS IN OPERATION.
4. THE MSR MOISTURE SEPARATOR EFFICIENCY IS NOT EXPECTED TO CHANGE AND ASSUMED TO BE 98% AT UPRATE; THIS MUST BE CONFIRMED BY TEI.
5. THE MSOPs(MOISTURE PRE-SEPARATORS) ARE ASSUMED NOT IN OPERATION.
6. NEW FEEDWATER HEATERS TUNED TO PERFORMANCE INDICATED IN THE AS-PURCHASED YUBA DATA SHEETS DATED 11/27/07.
7. PRESSURE DROPS THROUGH THE CONDENSATE AND FEEDWATER SYSTEM ARE APPROXIMATE, NOT TO BE USED AS THE BASIS OF SYSTEM HYDRAULIC STUDIES.
8. THIS HEAT BALANCE IS BASED ON 1967 STEAM TABLES.
9. HP TURBINE EFFICIENCY IS BASED ON FULL LOAD HEAT BALANCE RECEIVED FROM SIEMENS - WB-11209-1.
10. NEW EXTRACTION STEAM DP ARE BASED ON SHAW CALCULATION NO. 12918702-M-0008-0A

(NOT FOR GUARANTEE)

PREPARED BY	DATE	CHECKED BY	DATE

NMC- FPL
POINT BEACH NUCLEAR PLANT - UNIT 1

PEPSE TURBINE CYCLE MODEL

New HP Inlet DP, Calcd Ext Steam DP, Siemens HPT, CWIT 42.6F

NSSS MWt	1806.0 MWt
GROSS MW	637.5 MW
SG PRESSURE	802.0P
CW TEMP	42.6F

DWG 125225-HB(S)-300-6 | 04/17/08

Unit 1 T-127 Letdown temp at regen HX outlet			Unit 1 - T-145 Letdown temp at non regen HX outlet			Unit 2 T-127 Letdown temp at regen HX outlet			Unit 2 - T-145 Letdown temp at non regen HX outlet		
13-Nov-07	4:40:00 PM	268.0469	13-Nov-07	4:40:00 PM	109.7891	13-Nov-07	4:40:00 PM	255.5469	13-Nov-07	4:40:00 PM	108.00781
13-Nov-07	3:20:00 PM	269.6875	13-Nov-07	3:20:00 PM	110.0469	13-Nov-07	3:20:00 PM	256.0938	13-Nov-07	3:20:00 PM	108.14844
13-Nov-07	2:00:00 PM	269.6875	13-Nov-07	2:00:00 PM	109.7422	13-Nov-07	2:00:00 PM	255.5469	13-Nov-07	2:00:00 PM	108.171875
13-Nov-07	12:40:00 PM	269.6875	13-Nov-07	12:40:00 PM	110.2109	13-Nov-07	12:40:00 PM	255.5469	13-Nov-07	12:40:00 PM	108.171875
13-Nov-07	11:20:00 AM	268.0469	13-Nov-07	11:20:00 AM	110.2344	13-Nov-07	11:20:00 AM	254.9219	13-Nov-07	11:20:00 AM	108.24219
13-Nov-07	10:00:00 AM	269.1406	13-Nov-07	10:00:00 AM	110.0703	13-Nov-07	10:00:00 AM	253.9063	13-Nov-07	10:00:00 AM	108.265625
13-Nov-07	8:40:00 AM	268.9844	13-Nov-07	8:40:00 AM	109.9531	13-Nov-07	8:40:00 AM	253.0469	13-Nov-07	8:40:00 AM	108.265625
13-Nov-07	7:20:00 AM	268.9844	13-Nov-07	7:20:00 AM	109.9766	13-Nov-07	7:20:00 AM	250.8594	13-Nov-07	7:20:00 AM	108.265625
13-Nov-07	6:00:00 AM	270.0781	13-Nov-07	6:00:00 AM	109.9063	13-Nov-07	6:00:00 AM	252.5	13-Nov-07	6:00:00 AM	108.265625
13-Nov-07	4:40:00 AM	270.1563	13-Nov-07	4:40:00 AM	110.2109	13-Nov-07	4:40:00 AM	251.9531	13-Nov-07	4:40:00 AM	108.28906
13-Nov-07	3:20:00 AM	269.8438	13-Nov-07	3:20:00 AM	110.0234	13-Nov-07	3:20:00 AM	252.5	13-Nov-07	3:20:00 AM	108.359375
13-Nov-07	2:00:00 AM	269.8438	13-Nov-07	2:00:00 AM	110.1172	13-Nov-07	2:00:00 AM	253.0469	13-Nov-07	2:00:00 AM	108.359375
13-Nov-07	12:40:00 AM	269.5313	13-Nov-07	12:40:00 AM	110.0469	13-Nov-07	12:40:00 AM	254.1406	13-Nov-07	12:40:00 AM	108.38281
12-Nov-07	11:20:00 PM	270.0781	12-Nov-07	11:20:00 PM	110.0703	12-Nov-07	11:20:00 PM	254.6875	12-Nov-07	11:20:00 PM	108.42969
12-Nov-07	10:00:00 PM	269.5313	12-Nov-07	10:00:00 PM	110.1641	12-Nov-07	10:00:00 PM	255.5469	12-Nov-07	10:00:00 PM	108.42969
12-Nov-07	8:40:00 PM	269.5313	12-Nov-07	8:40:00 PM	110.0703	12-Nov-07	8:40:00 PM	255.5469	12-Nov-07	8:40:00 PM	108.42969
12-Nov-07	7:20:00 PM	268.9844	12-Nov-07	7:20:00 PM	110.0703	12-Nov-07	7:20:00 PM	254.8438	12-Nov-07	7:20:00 PM	108.42969
12-Nov-07	6:00:00 PM	269.5313	12-Nov-07	6:00:00 PM	110.1406	12-Nov-07	6:00:00 PM	253.2031	12-Nov-07	6:00:00 PM	108.453125
12-Nov-07	4:40:00 PM	265.1563	12-Nov-07	4:40:00 PM	110.2813	12-Nov-07	4:40:00 PM	252.7344	12-Nov-07	4:40:00 PM	108.453125
12-Nov-07	3:20:00 PM	268.9844	12-Nov-07	3:20:00 PM	109.7656	12-Nov-07	3:20:00 PM	252.1875	12-Nov-07	3:20:00 PM	108.453125
12-Nov-07	2:00:00 PM	269.5313	12-Nov-07	2:00:00 PM	109.7422	12-Nov-07	2:00:00 PM	252.1875	12-Nov-07	2:00:00 PM	108.453125
12-Nov-07	12:40:00 PM	269.7656	12-Nov-07	12:40:00 PM	109.7188	12-Nov-07	12:40:00 PM	251.7969	12-Nov-07	12:40:00 PM	108.47656
12-Nov-07	11:20:00 AM	270.3125	12-Nov-07	11:20:00 AM	110.3516	12-Nov-07	11:20:00 AM	252.8906	12-Nov-07	11:20:00 AM	108.47656
12-Nov-07	10:00:00 AM	269.2188	12-Nov-07	10:00:00 AM	110.1641	12-Nov-07	10:00:00 AM	253.9844	12-Nov-07	10:00:00 AM	108.5
12-Nov-07	8:40:00 AM	268.125	12-Nov-07	8:40:00 AM	110.1172	12-Nov-07	8:40:00 AM	255.625	12-Nov-07	8:40:00 AM	108.5
12-Nov-07	7:20:00 AM	269.2188	12-Nov-07	7:20:00 AM	109.6953	12-Nov-07	7:20:00 AM	256.3281	12-Nov-07	7:20:00 AM	108.5
12-Nov-07	6:00:00 AM	268.8281	12-Nov-07	6:00:00 AM	110.2109	12-Nov-07	6:00:00 AM	255.7813	12-Nov-07	6:00:00 AM	108.5
12-Nov-07	4:40:00 AM	268.8281	12-Nov-07	4:40:00 AM	110.375	12-Nov-07	4:40:00 AM	256.3281	12-Nov-07	4:40:00 AM	108.5
12-Nov-07	3:20:00 AM	268.2813	12-Nov-07	3:20:00 AM	110.1172	12-Nov-07	3:20:00 AM	255.7031	12-Nov-07	3:20:00 AM	108.5
12-Nov-07	2:00:00 AM	268.2813	12-Nov-07	2:00:00 AM	110.0703	12-Nov-07	2:00:00 AM	255.4688	12-Nov-07	2:00:00 AM	108.52344
12-Nov-07	12:40:00 AM	269.375	12-Nov-07	12:40:00 AM	110.0938	12-Nov-07	12:40:00 AM	254.8438	12-Nov-07	12:40:00 AM	108.52344
11-Nov-07	11:20:00 PM	268.2813	11-Nov-07	11:20:00 PM	110.2578	11-Nov-07	11:20:00 PM	253.75	11-Nov-07	11:20:00 PM	108.52344
11-Nov-07	10:00:00 PM	268.8281	11-Nov-07	10:00:00 PM	110.1875	11-Nov-07	10:00:00 PM	253.0469	11-Nov-07	10:00:00 PM	108.52344
11-Nov-07	8:40:00 PM	268.2813	11-Nov-07	8:40:00 PM	110.2344	11-Nov-07	8:40:00 PM	253.0469	11-Nov-07	8:40:00 PM	108.52344
11-Nov-07	7:20:00 PM	268.8281	11-Nov-07	7:20:00 PM	109.8594	11-Nov-07	7:20:00 PM	252.9688	11-Nov-07	7:20:00 PM	108.52344
11-Nov-07	6:00:00 PM	268.8281	11-Nov-07	6:00:00 PM	110.1641	11-Nov-07	6:00:00 PM	252.4219	11-Nov-07	6:00:00 PM	108.52344
11-Nov-07	4:40:00 PM	268.2813	11-Nov-07	4:40:00 PM	110.1875	11-Nov-07	4:40:00 PM	252.9688	11-Nov-07	4:40:00 PM	108.52344
11-Nov-07	3:20:00 PM	268.2813	11-Nov-07	3:20:00 PM	110.1406	11-Nov-07	3:20:00 PM	253.5156	11-Nov-07	3:20:00 PM	108.52344
11-Nov-07	2:00:00 PM	268.8281	11-Nov-07	2:00:00 PM	110.1406	11-Nov-07	2:00:00 PM	254.4531	11-Nov-07	2:00:00 PM	108.52344
11-Nov-07	12:40:00 PM	268.2813	11-Nov-07	12:40:00 PM	110.1406	11-Nov-07	12:40:00 PM	255	11-Nov-07	12:40:00 PM	108.546875
11-Nov-07	11:20:00 AM	269.375	11-Nov-07	11:20:00 AM	110.2344	11-Nov-07	11:20:00 AM	256.6406	11-Nov-07	11:20:00 AM	108.546875
11-Nov-07	10:00:00 AM	268.8281	11-Nov-07	10:00:00 AM	110.1641	11-Nov-07	10:00:00 AM	256.0938	11-Nov-07	10:00:00 AM	108.546875
11-Nov-07	8:40:00 AM	268.8281	11-Nov-07	8:40:00 AM	110.1172	11-Nov-07	8:40:00 AM	255	11-Nov-07	8:40:00 AM	108.546875
11-Nov-07	7:20:00 AM	268.2813	11-Nov-07	7:20:00 AM	110.1406	11-Nov-07	7:20:00 AM	252.2656	11-Nov-07	7:20:00 AM	108.546875
11-Nov-07	6:00:00 AM	268.2813	11-Nov-07	6:00:00 AM	110.0469	11-Nov-07	6:00:00 AM	252.2656	11-Nov-07	6:00:00 AM	108.546875
11-Nov-07	4:40:00 AM	268.8281	11-Nov-07	4:40:00 AM	109.8828	11-Nov-07	4:40:00 AM	252.2656	11-Nov-07	4:40:00 AM	108.546875
11-Nov-07	3:20:00 AM	269.375	11-Nov-07	3:20:00 AM	109.9766	11-Nov-07	3:20:00 AM	251.875	11-Nov-07	3:20:00 AM	108.546875
11-Nov-07	2:00:00 AM	268.8281	11-Nov-07	2:00:00 AM	110.2344	11-Nov-07	2:00:00 AM	252.4219	11-Nov-07	2:00:00 AM	108.546875
11-Nov-07	12:40:00 AM	269.9219	11-Nov-07	12:40:00 AM	110.5391	11-Nov-07	12:40:00 AM	252.8125	11-Nov-07	12:40:00 AM	108.546875

Unit 1 T-127 Letdown temp at regen HX outlet			Unit 1 - T-145 Letdown temp at non regen HX outlet			Unit 2 T-127 Letdown temp at regen HX outlet			Unit 2 - T-145 Letdown temp at non regen HX outlet		
10-Nov-07	11:20:00 PM	267.7344	10-Nov-07	11:20:00 PM	109.5078	10-Nov-07	11:20:00 PM	254.4531	10-Nov-07	11:20:00 PM	108.546875
10-Nov-07	10:00:00 PM	268.2813	10-Nov-07	10:00:00 PM	109.5547	10-Nov-07	10:00:00 PM	255.5469	10-Nov-07	10:00:00 PM	108.546875
10-Nov-07	8:40:00 PM	269.375	10-Nov-07	8:40:00 PM	110.0703	10-Nov-07	8:40:00 PM	255.5469	10-Nov-07	8:40:00 PM	108.546875
10-Nov-07	7:20:00 PM	269.9219	10-Nov-07	7:20:00 PM	110.1875	10-Nov-07	7:20:00 PM	257.1875	10-Nov-07	7:20:00 PM	108.546875
10-Nov-07	6:00:00 PM	269.375	10-Nov-07	6:00:00 PM	110.0469	10-Nov-07	6:00:00 PM	255	10-Nov-07	6:00:00 PM	108.546875
10-Nov-07	4:40:00 PM	269.375	10-Nov-07	4:40:00 PM	110.1172	10-Nov-07	4:40:00 PM	254.4531	10-Nov-07	4:40:00 PM	108.57031
10-Nov-07	3:20:00 PM	269.7656	10-Nov-07	3:20:00 PM	110	10-Nov-07	3:20:00 PM	253.9063	10-Nov-07	3:20:00 PM	108.57031
10-Nov-07	2:00:00 PM	269.7656	10-Nov-07	2:00:00 PM	110.0938	10-Nov-07	2:00:00 PM	254.4531	10-Nov-07	2:00:00 PM	108.57031
10-Nov-07	12:40:00 PM	269.2188	10-Nov-07	12:40:00 PM	110.1641	10-Nov-07	12:40:00 PM	251.7188	10-Nov-07	12:40:00 PM	108.57031
10-Nov-07	11:20:00 AM	268.125	10-Nov-07	11:20:00 AM	110.0938	10-Nov-07	11:20:00 AM	255.2344	10-Nov-07	11:20:00 AM	108.57031
10-Nov-07	10:00:00 AM	268.6719	10-Nov-07	10:00:00 AM	110.0703	10-Nov-07	10:00:00 AM	256.3281	10-Nov-07	10:00:00 AM	108.57031
10-Nov-07	8:40:00 AM	267.9688	10-Nov-07	8:40:00 AM	110.0938	10-Nov-07	8:40:00 AM	255.7813	10-Nov-07	8:40:00 AM	108.57031
10-Nov-07	7:20:00 AM	269.0625	10-Nov-07	7:20:00 AM	110	10-Nov-07	7:20:00 AM	254.6875	10-Nov-07	7:20:00 AM	108.57031
10-Nov-07	6:00:00 AM	269.0625	10-Nov-07	6:00:00 AM	110.0703	10-Nov-07	6:00:00 AM	254.1406	10-Nov-07	6:00:00 AM	108.57031
10-Nov-07	4:40:00 AM	269.0625	10-Nov-07	4:40:00 AM	110.1172	10-Nov-07	4:40:00 AM	252.5	10-Nov-07	4:40:00 AM	108.57031
10-Nov-07	3:20:00 AM	269.0625	10-Nov-07	3:20:00 AM	110.1875	10-Nov-07	3:20:00 AM	251.9531	10-Nov-07	3:20:00 AM	108.57031
10-Nov-07	2:00:00 AM	269.0625	10-Nov-07	2:00:00 AM	110.0703	10-Nov-07	2:00:00 AM	251.9531	10-Nov-07	2:00:00 AM	108.57031
10-Nov-07	12:40:00 AM	269.0625	10-Nov-07	12:40:00 AM	110.1172	10-Nov-07	12:40:00 AM	252.5	10-Nov-07	12:40:00 AM	108.57031
9-Nov-07	11:20:00 PM	269.2188	9-Nov-07	11:20:00 PM	110.1641	9-Nov-07	11:20:00 PM	253.0469	9-Nov-07	11:20:00 PM	108.57031
9-Nov-07	10:00:00 PM	269.0625	9-Nov-07	10:00:00 PM	110.0938	9-Nov-07	10:00:00 PM	254.1406	9-Nov-07	10:00:00 PM	108.57031
9-Nov-07	8:40:00 PM	268.9063	9-Nov-07	8:40:00 PM	110.1641	9-Nov-07	8:40:00 PM	255.7813	9-Nov-07	8:40:00 PM	108.57031
9-Nov-07	7:20:00 PM	268.9063	9-Nov-07	7:20:00 PM	110.1172	9-Nov-07	7:20:00 PM	256.0156	9-Nov-07	7:20:00 PM	108.59375
9-Nov-07	6:00:00 PM	268.9063	9-Nov-07	6:00:00 PM	110.0703	9-Nov-07	6:00:00 PM	264.1406	9-Nov-07	6:00:00 PM	108.59375
9-Nov-07	4:40:00 PM	270.4688	9-Nov-07	4:40:00 PM	110.2344	9-Nov-07	4:40:00 PM	254.375	9-Nov-07	4:40:00 PM	108.59375
9-Nov-07	3:20:00 PM	268.8281	9-Nov-07	3:20:00 PM	110.4453	9-Nov-07	3:20:00 PM	252.7344	9-Nov-07	3:20:00 PM	108.59375
9-Nov-07	2:00:00 PM	266.6406	9-Nov-07	2:00:00 PM	109.8828	9-Nov-07	2:00:00 PM	252.7344	9-Nov-07	2:00:00 PM	108.59375
9-Nov-07	12:40:00 PM	267.7344	9-Nov-07	12:40:00 PM	110.0703	9-Nov-07	12:40:00 PM	252.1875	9-Nov-07	12:40:00 PM	108.59375
9-Nov-07	11:20:00 AM	267.7344	9-Nov-07	11:20:00 AM	110.0938	9-Nov-07	11:20:00 AM	252.7344	9-Nov-07	11:20:00 AM	108.59375
9-Nov-07	10:00:00 AM	267.7344	9-Nov-07	10:00:00 AM	110.2344	9-Nov-07	10:00:00 AM	251.0938	9-Nov-07	10:00:00 AM	108.59375
9-Nov-07	8:40:00 AM	267.1875	9-Nov-07	8:40:00 AM	110.1406	9-Nov-07	8:40:00 AM	253.2813	9-Nov-07	8:40:00 AM	108.59375
9-Nov-07	7:20:00 AM	267.7344	9-Nov-07	7:20:00 AM	110.0938	9-Nov-07	7:20:00 AM	254.6094	9-Nov-07	7:20:00 AM	108.59375
9-Nov-07	6:00:00 AM	268.2813	9-Nov-07	6:00:00 AM	110.0938	9-Nov-07	6:00:00 AM	253.9844	9-Nov-07	6:00:00 AM	108.59375
9-Nov-07	4:40:00 AM	268.8281	9-Nov-07	4:40:00 AM	110.0703	9-Nov-07	4:40:00 AM	252.8906	9-Nov-07	4:40:00 AM	108.59375
9-Nov-07	3:20:00 AM	268.8281	9-Nov-07	3:20:00 AM	110.0703	9-Nov-07	3:20:00 AM	253.4375	9-Nov-07	3:20:00 AM	108.59375
9-Nov-07	2:00:00 AM	268.2813	9-Nov-07	2:00:00 AM	110.2109	9-Nov-07	2:00:00 AM	253.6719	9-Nov-07	2:00:00 AM	108.59375
9-Nov-07	12:40:00 AM	268.2813	9-Nov-07	12:40:00 AM	110.1406	9-Nov-07	12:40:00 AM	254.2188	9-Nov-07	12:40:00 AM	108.59375
8-Nov-07	11:20:00 PM	267.9688	8-Nov-07	11:20:00 PM	110.1875	8-Nov-07	11:20:00 PM	255	8-Nov-07	11:20:00 PM	108.59375
8-Nov-07	10:00:00 PM	267.7344	8-Nov-07	10:00:00 PM	110.1172	8-Nov-07	10:00:00 PM	255.3125	8-Nov-07	10:00:00 PM	108.59375
8-Nov-07	8:40:00 PM	267.1875	8-Nov-07	8:40:00 PM	110.1172	8-Nov-07	8:40:00 PM	256.6406	8-Nov-07	8:40:00 PM	108.59375
8-Nov-07	7:20:00 PM	267.7344	8-Nov-07	7:20:00 PM	109.8594	8-Nov-07	7:20:00 PM	256.6406	8-Nov-07	7:20:00 PM	108.59375
8-Nov-07	6:00:00 PM	267.7344	8-Nov-07	6:00:00 PM	109.9297	8-Nov-07	6:00:00 PM	255.8594	8-Nov-07	6:00:00 PM	108.59375
8-Nov-07	4:40:00 PM	268.5156	8-Nov-07	4:40:00 PM	110.1172	8-Nov-07	4:40:00 PM	254.7656	8-Nov-07	4:40:00 PM	108.59375
8-Nov-07	3:20:00 PM	268.5156	8-Nov-07	3:20:00 PM	110.0938	8-Nov-07	3:20:00 PM	252.0313	8-Nov-07	3:20:00 PM	108.61719
8-Nov-07	2:00:00 PM	268.2031	8-Nov-07	2:00:00 PM	110.1875	8-Nov-07	2:00:00 PM	254.1406	8-Nov-07	2:00:00 PM	108.61719
8-Nov-07	12:40:00 PM	267.1094	8-Nov-07	12:40:00 PM	110.1875	8-Nov-07	12:40:00 PM	254.6094	8-Nov-07	12:40:00 PM	108.61719
8-Nov-07	11:20:00 AM	267.1094	8-Nov-07	11:20:00 AM	110.0938	8-Nov-07	11:20:00 AM	254.7656	8-Nov-07	11:20:00 AM	108.61719
8-Nov-07	10:00:00 AM	267.1094	8-Nov-07	10:00:00 AM	110.0703	8-Nov-07	10:00:00 AM	256.4063	8-Nov-07	10:00:00 AM	108.61719
8-Nov-07	8:40:00 AM	267.1094	8-Nov-07	8:40:00 AM	110.0938	8-Nov-07	8:40:00 AM	256.7969	8-Nov-07	8:40:00 AM	108.61719
8-Nov-07	7:20:00 AM	267.4219	8-Nov-07	7:20:00 AM	110.0469	8-Nov-07	7:20:00 AM	256.25	8-Nov-07	7:20:00 AM	108.61719

Unit 1 T-127
Letdown temp at regen HX outlet

8-Nov-07	6:00:00 AM	267.5781
8-Nov-07	4:40:00 AM	267.0313
8-Nov-07	3:20:00 AM	267.5781
8-Nov-07	2:00:00 AM	267.5781
8-Nov-07	12:40:00 AM	267.9688
7-Nov-07	11:20:00 PM	267.3438
7-Nov-07	10:00:00 PM	268.125
7-Nov-07	8:40:00 PM	268.125
7-Nov-07	7:20:00 PM	268.125
7-Nov-07	6:00:00 PM	268.4375
7-Nov-07	4:40:00 PM	267.8906
7-Nov-07	3:20:00 PM	267.8906
7-Nov-07	2:00:00 PM	267.3438
7-Nov-07	12:40:00 PM	267.3438
7-Nov-07	11:20:00 AM	267.8906
7-Nov-07	10:00:00 AM	267.3438
7-Nov-07	8:40:00 AM	267.8906
7-Nov-07	7:20:00 AM	267.4219
7-Nov-07	6:00:00 AM	267.9688
7-Nov-07	4:40:00 AM	268.5156
7-Nov-07	3:20:00 AM	267.4219
7-Nov-07	2:00:00 AM	267.9688
7-Nov-07	12:40:00 AM	268.5156
6-Nov-07	11:20:00 PM	267.9688
6-Nov-07	10:00:00 PM	268.5156
6-Nov-07	8:40:00 PM	269.6094
6-Nov-07	7:20:00 PM	268.5156
6-Nov-07	6:00:00 PM	267.9688
6-Nov-07	4:40:00 PM	267.4219
6-Nov-07	3:20:00 PM	266.3281
6-Nov-07	2:00:00 PM	268.5156
6-Nov-07	12:40:00 PM	269.0625
6-Nov-07	11:20:00 AM	268.5938
6-Nov-07	10:00:00 AM	268.0469
6-Nov-07	8:40:00 AM	267.5
6-Nov-07	7:20:00 AM	267.5
6-Nov-07	6:00:00 AM	268.0469
6-Nov-07	4:40:00 AM	268.5938
6-Nov-07	3:20:00 AM	267.5
6-Nov-07	2:00:00 AM	268.0469
6-Nov-07	12:40:00 AM	268.0469
5-Nov-07	11:20:00 PM	268.2813
5-Nov-07	10:00:00 PM	267.7344
5-Nov-07	8:40:00 PM	267.1875
5-Nov-07	7:20:00 PM	266.6406
5-Nov-07	6:00:00 PM	267.1875
5-Nov-07	4:40:00 PM	267.1875
5-Nov-07	3:20:00 PM	267.4219
5-Nov-07	2:00:00 PM	266.9531

Unit 1 - T-145
Letdown temp at non regen HX outlet

8-Nov-07	6:00:00 AM	110.2813
8-Nov-07	4:40:00 AM	110.1406
8-Nov-07	3:20:00 AM	110.1406
8-Nov-07	2:00:00 AM	110.1875
8-Nov-07	12:40:00 AM	110.1172
7-Nov-07	11:20:00 PM	110.0469
7-Nov-07	10:00:00 PM	110.0469
7-Nov-07	8:40:00 PM	110.1172
7-Nov-07	7:20:00 PM	110.0234
7-Nov-07	6:00:00 PM	110.2813
7-Nov-07	4:40:00 PM	110.2578
7-Nov-07	3:20:00 PM	110.1172
7-Nov-07	2:00:00 PM	110.1875
7-Nov-07	12:40:00 PM	110.2344
7-Nov-07	11:20:00 AM	110.1641
7-Nov-07	10:00:00 AM	110.0469
7-Nov-07	8:40:00 AM	110.0469
7-Nov-07	7:20:00 AM	110.0469
7-Nov-07	6:00:00 AM	110.0703
7-Nov-07	4:40:00 AM	110.0938
7-Nov-07	3:20:00 AM	110.1406
7-Nov-07	2:00:00 AM	110.2109
7-Nov-07	12:40:00 AM	110.0469
6-Nov-07	11:20:00 PM	110.1172
6-Nov-07	10:00:00 PM	110.1875
6-Nov-07	8:40:00 PM	110.3984
6-Nov-07	7:20:00 PM	110.4922
6-Nov-07	6:00:00 PM	110.2109
6-Nov-07	4:40:00 PM	109.9063
6-Nov-07	3:20:00 PM	110.0938
6-Nov-07	2:00:00 PM	109.9766
6-Nov-07	12:40:00 PM	110.0469
6-Nov-07	11:20:00 AM	110.1875
6-Nov-07	10:00:00 AM	110.1875
6-Nov-07	8:40:00 AM	110.1172
6-Nov-07	7:20:00 AM	110.0938
6-Nov-07	6:00:00 AM	110.0703
6-Nov-07	4:40:00 AM	109.9766
6-Nov-07	3:20:00 AM	109.9766
6-Nov-07	2:00:00 AM	113.5859
6-Nov-07	12:40:00 AM	110.1641
5-Nov-07	11:20:00 PM	110.2109
5-Nov-07	10:00:00 PM	110.2344
5-Nov-07	8:40:00 PM	110.1875
5-Nov-07	7:20:00 PM	110.0938
5-Nov-07	6:00:00 PM	110.1172
5-Nov-07	4:40:00 PM	110.0703
5-Nov-07	3:20:00 PM	110.1406
5-Nov-07	2:00:00 PM	110.2813

Unit 2 T-127
Letdown temp at regen HX outlet

8-Nov-07	6:00:00 AM	256.25
8-Nov-07	4:40:00 AM	252.4219
8-Nov-07	3:20:00 AM	255.1563
8-Nov-07	2:00:00 AM	250.7813
8-Nov-07	12:40:00 AM	251.3281
7-Nov-07	11:20:00 PM	252.4219
7-Nov-07	10:00:00 PM	253.0469
7-Nov-07	8:40:00 PM	253.5938
7-Nov-07	7:20:00 PM	254.8438
7-Nov-07	6:00:00 PM	254.6875
7-Nov-07	4:40:00 PM	254.1406
7-Nov-07	3:20:00 PM	253.9063
7-Nov-07	2:00:00 PM	253.3594
7-Nov-07	12:40:00 PM	253.3594
7-Nov-07	11:20:00 AM	253.4375
7-Nov-07	10:00:00 AM	254.2188
7-Nov-07	8:40:00 AM	254.7656
7-Nov-07	7:20:00 AM	254.4531
7-Nov-07	6:00:00 AM	254.4531
7-Nov-07	4:40:00 AM	254.4531
7-Nov-07	3:20:00 AM	252.8125
7-Nov-07	2:00:00 AM	251.7188
7-Nov-07	12:40:00 AM	251.0938
6-Nov-07	11:20:00 PM	251.0156
6-Nov-07	10:00:00 PM	251.5625
6-Nov-07	8:40:00 PM	251.4844
6-Nov-07	7:20:00 PM	252.0313
6-Nov-07	6:00:00 PM	252.5781
6-Nov-07	4:40:00 PM	254.2188
6-Nov-07	3:20:00 PM	255.3125
6-Nov-07	2:00:00 PM	255.3125
6-Nov-07	12:40:00 PM	254.2188
6-Nov-07	11:20:00 AM	254.2188
6-Nov-07	10:00:00 AM	253.6719
6-Nov-07	8:40:00 AM	254.2188
6-Nov-07	7:20:00 AM	254.6094
6-Nov-07	6:00:00 AM	255.1563
6-Nov-07	4:40:00 AM	256.3281
6-Nov-07	3:20:00 AM	255.2344
6-Nov-07	2:00:00 AM	254.1406
6-Nov-07	12:40:00 AM	254.6094
5-Nov-07	11:20:00 PM	254.6875
5-Nov-07	10:00:00 PM	255.3125
5-Nov-07	8:40:00 PM	255.625
5-Nov-07	7:20:00 PM	256.1719
5-Nov-07	6:00:00 PM	256.1719
5-Nov-07	4:40:00 PM	256.1719
5-Nov-07	3:20:00 PM	255.625
5-Nov-07	2:00:00 PM	253.9844

Unit 2 - T-145
Letdown temp at non regen HX outlet

8-Nov-07	6:00:00 AM	108.61719
8-Nov-07	4:40:00 AM	108.61719
8-Nov-07	3:20:00 AM	108.61719
8-Nov-07	2:00:00 AM	108.61719
8-Nov-07	12:40:00 AM	108.61719
7-Nov-07	11:20:00 PM	108.61719
7-Nov-07	10:00:00 PM	108.61719
7-Nov-07	8:40:00 PM	108.61719
7-Nov-07	7:20:00 PM	108.61719
7-Nov-07	6:00:00 PM	108.61719
7-Nov-07	4:40:00 PM	108.61719
7-Nov-07	3:20:00 PM	108.61719
7-Nov-07	2:00:00 PM	108.61719
7-Nov-07	12:40:00 PM	108.61719
7-Nov-07	11:20:00 AM	108.61719
7-Nov-07	10:00:00 AM	108.61719
7-Nov-07	8:40:00 AM	108.61719
7-Nov-07	7:20:00 AM	108.61719
7-Nov-07	6:00:00 AM	108.61719
7-Nov-07	4:40:00 AM	108.61719
7-Nov-07	3:20:00 AM	108.61719
7-Nov-07	2:00:00 AM	108.61719
7-Nov-07	12:40:00 AM	108.61719
6-Nov-07	11:20:00 PM	108.61719
6-Nov-07	10:00:00 PM	108.61719
6-Nov-07	8:40:00 PM	108.640625
6-Nov-07	7:20:00 PM	108.640625
6-Nov-07	6:00:00 PM	108.640625
6-Nov-07	4:40:00 PM	108.640625
6-Nov-07	3:20:00 PM	108.640625
6-Nov-07	2:00:00 PM	108.640625
6-Nov-07	12:40:00 PM	108.640625
6-Nov-07	11:20:00 AM	108.640625
6-Nov-07	10:00:00 AM	108.640625
6-Nov-07	8:40:00 AM	108.640625
6-Nov-07	7:20:00 AM	108.640625
6-Nov-07	6:00:00 AM	108.640625
6-Nov-07	4:40:00 AM	108.640625
6-Nov-07	3:20:00 AM	108.640625
6-Nov-07	2:00:00 AM	108.640625
6-Nov-07	12:40:00 AM	108.640625
5-Nov-07	11:20:00 PM	108.640625
5-Nov-07	10:00:00 PM	108.640625
5-Nov-07	8:40:00 PM	108.640625
5-Nov-07	7:20:00 PM	108.640625
5-Nov-07	6:00:00 PM	108.640625
5-Nov-07	4:40:00 PM	108.640625
5-Nov-07	3:20:00 PM	108.640625
5-Nov-07	2:00:00 PM	108.640625

Unit 1 T-127 Letdown temp at regen HX outlet			Unit 1 - T-145 Letdown temp at non regen HX outlet			Unit 2 T-127 Letdown temp at regen HX outlet			Unit 2 - T-145 Letdown temp at non regen HX outlet		
5-Nov-07	12:40:00 PM	266.4063	5-Nov-07	12:40:00 PM	110.0703	5-Nov-07	12:40:00 PM	252.8906	5-Nov-07	12:40:00 PM	108.640625
5-Nov-07	11:20:00 AM	266.9531	5-Nov-07	11:20:00 AM	110.1406	5-Nov-07	11:20:00 AM	252.5781	5-Nov-07	11:20:00 AM	108.640625
5-Nov-07	10:00:00 AM	266.9531	5-Nov-07	10:00:00 AM	110.0938	5-Nov-07	10:00:00 AM	253.125	5-Nov-07	10:00:00 AM	108.640625
5-Nov-07	8:40:00 AM	266.4063	5-Nov-07	8:40:00 AM	109.9297	5-Nov-07	8:40:00 AM	252.5781	5-Nov-07	8:40:00 AM	108.640625
5-Nov-07	7:20:00 AM	267.5	5-Nov-07	7:20:00 AM	110.1641	5-Nov-07	7:20:00 AM	253.6719	5-Nov-07	7:20:00 AM	108.640625
5-Nov-07	6:00:00 AM	266.9531	5-Nov-07	6:00:00 AM	110.1172	5-Nov-07	6:00:00 AM	254.2188	5-Nov-07	6:00:00 AM	108.640625
5-Nov-07	4:40:00 AM	266.9531	5-Nov-07	4:40:00 AM	110.2813	5-Nov-07	4:40:00 AM	255.3125	5-Nov-07	4:40:00 AM	108.640625
5-Nov-07	3:20:00 AM	266.9531	5-Nov-07	3:20:00 AM	110.0469	5-Nov-07	3:20:00 AM	255.3125	5-Nov-07	3:20:00 AM	108.640625
5-Nov-07	2:00:00 AM	266.9531	5-Nov-07	2:00:00 AM	110.1406	5-Nov-07	2:00:00 AM	254.2188	5-Nov-07	2:00:00 AM	108.640625
5-Nov-07	12:40:00 AM	267.2656	5-Nov-07	12:40:00 AM	109.9766	5-Nov-07	12:40:00 AM	253.6719	5-Nov-07	12:40:00 AM	108.66406
4-Nov-07	11:20:00 PM	267.0313	4-Nov-07	11:20:00 PM	110.0703	4-Nov-07	11:20:00 PM	253.0469	4-Nov-07	11:20:00 PM	108.66406
4-Nov-07	10:00:00 PM	266.9531	4-Nov-07	10:00:00 PM	110.0938	4-Nov-07	10:00:00 PM	253.3594	4-Nov-07	10:00:00 PM	108.66406
4-Nov-07	8:40:00 PM	266.9531	4-Nov-07	8:40:00 PM	110.2344	4-Nov-07	8:40:00 PM	253.9063	4-Nov-07	8:40:00 PM	108.66406
4-Nov-07	7:20:00 PM	266.9531	4-Nov-07	7:20:00 PM	110.0469	4-Nov-07	7:20:00 PM	254.4531	4-Nov-07	7:20:00 PM	108.66406
4-Nov-07	6:00:00 PM	266.9531	4-Nov-07	6:00:00 PM	110.1641	4-Nov-07	6:00:00 PM	254.1406	4-Nov-07	6:00:00 PM	108.66406
4-Nov-07	4:40:00 PM	267.5	4-Nov-07	4:40:00 PM	110	4-Nov-07	4:40:00 PM	254.6875	4-Nov-07	4:40:00 PM	108.66406
4-Nov-07	3:20:00 PM	267.5	4-Nov-07	3:20:00 PM	110.0234	4-Nov-07	3:20:00 PM	255.3906	4-Nov-07	3:20:00 PM	108.66406
4-Nov-07	2:00:00 PM	267.5	4-Nov-07	2:00:00 PM	110.0938	4-Nov-07	2:00:00 PM	255.9375	4-Nov-07	2:00:00 PM	108.66406
4-Nov-07	12:40:00 PM	267.5	4-Nov-07	12:40:00 PM	110.0469	4-Nov-07	12:40:00 PM	255.3906	4-Nov-07	12:40:00 PM	108.66406
4-Nov-07	11:20:00 AM	267.5	4-Nov-07	11:20:00 AM	109.9766	4-Nov-07	11:20:00 AM	255.3906	4-Nov-07	11:20:00 AM	108.66406
4-Nov-07	10:00:00 AM	268.0469	4-Nov-07	10:00:00 AM	110.0938	4-Nov-07	10:00:00 AM	255.3906	4-Nov-07	10:00:00 AM	108.66406
4-Nov-07	8:40:00 AM	267.7344	4-Nov-07	8:40:00 AM	110.1641	4-Nov-07	8:40:00 AM	253.9844	4-Nov-07	8:40:00 AM	108.66406
4-Nov-07	7:20:00 AM	267.8906	4-Nov-07	7:20:00 AM	110.0938	4-Nov-07	7:20:00 AM	253.9844	4-Nov-07	7:20:00 AM	108.66406
4-Nov-07	6:00:00 AM	267.8906	4-Nov-07	6:00:00 AM	110.1875	4-Nov-07	6:00:00 AM	253.9844	4-Nov-07	6:00:00 AM	108.66406
4-Nov-07	4:40:00 AM	267.3438	4-Nov-07	4:40:00 AM	110.2344	4-Nov-07	4:40:00 AM	253.9844	4-Nov-07	4:40:00 AM	108.66406
4-Nov-07	3:20:00 AM	267.8906	4-Nov-07	3:20:00 AM	110.0703	4-Nov-07	3:20:00 AM	254.2188	4-Nov-07	3:20:00 AM	108.66406
4-Nov-07	2:00:00 AM	267.2656	4-Nov-07	2:00:00 AM	110.0469	4-Nov-07	2:00:00 AM	254.2188	4-Nov-07	2:00:00 AM	108.66406
4-Nov-07	12:40:00 AM	267.8125	4-Nov-07	12:40:00 AM	110.0469	4-Nov-07	12:40:00 AM	254.6875	4-Nov-07	12:40:00 AM	108.66406
3-Nov-07	11:20:00 PM	267.2656	3-Nov-07	11:20:00 PM	109.9297	3-Nov-07	11:20:00 PM	254.6875	3-Nov-07	11:20:00 PM	108.66406
3-Nov-07	10:00:00 PM	268.0469	3-Nov-07	10:00:00 PM	110.1172	3-Nov-07	10:00:00 PM	255.5469	3-Nov-07	10:00:00 PM	108.66406
3-Nov-07	8:40:00 PM	267.8125	3-Nov-07	8:40:00 PM	110.1406	3-Nov-07	8:40:00 PM	255	3-Nov-07	8:40:00 PM	108.66406
3-Nov-07	7:20:00 PM	267.8125	3-Nov-07	7:20:00 PM	110.0938	3-Nov-07	7:20:00 PM	256.0938	3-Nov-07	7:20:00 PM	108.66406
3-Nov-07	6:00:00 PM	267.2656	3-Nov-07	6:00:00 PM	109.9063	3-Nov-07	6:00:00 PM	254.7656	3-Nov-07	6:00:00 PM	108.66406
3-Nov-07	4:40:00 PM	267.8125	3-Nov-07	4:40:00 PM	109.9063	3-Nov-07	4:40:00 PM	254.2188	3-Nov-07	4:40:00 PM	108.66406
3-Nov-07	3:20:00 PM	267.9688	3-Nov-07	3:20:00 PM	109.9766	3-Nov-07	3:20:00 PM	253.6719	3-Nov-07	3:20:00 PM	108.66406
3-Nov-07	2:00:00 PM	267.5781	3-Nov-07	2:00:00 PM	109.9766	3-Nov-07	2:00:00 PM	253.2813	3-Nov-07	2:00:00 PM	108.66406
3-Nov-07	12:40:00 PM	268.125	3-Nov-07	12:40:00 PM	110.1641	3-Nov-07	12:40:00 PM	252.7344	3-Nov-07	12:40:00 PM	108.66406
3-Nov-07	11:20:00 AM	267.5781	3-Nov-07	11:20:00 AM	110.0234	3-Nov-07	11:20:00 AM	252.7344	3-Nov-07	11:20:00 AM	108.66406
3-Nov-07	10:00:00 AM	265.9375	3-Nov-07	10:00:00 AM	109.8359	3-Nov-07	10:00:00 AM	253.6719	3-Nov-07	10:00:00 AM	108.66406
3-Nov-07	8:40:00 AM	266.4844	3-Nov-07	8:40:00 AM	110.2109	3-Nov-07	8:40:00 AM	254.1406	3-Nov-07	8:40:00 AM	108.66406
3-Nov-07	7:20:00 AM	266.4844	3-Nov-07	7:20:00 AM	110.0938	3-Nov-07	7:20:00 AM	255.2344	3-Nov-07	7:20:00 AM	108.66406
3-Nov-07	6:00:00 AM	267.5781	3-Nov-07	6:00:00 AM	110.0938	3-Nov-07	6:00:00 AM	255.7813	3-Nov-07	6:00:00 AM	108.66406
3-Nov-07	4:40:00 AM	267.5781	3-Nov-07	4:40:00 AM	110.0703	3-Nov-07	4:40:00 AM	256.3281	3-Nov-07	4:40:00 AM	108.66406
3-Nov-07	3:20:00 AM	266.4844	3-Nov-07	3:20:00 AM	110.0469	3-Nov-07	3:20:00 AM	254.1406	3-Nov-07	3:20:00 AM	108.66406
3-Nov-07	2:00:00 AM	267.0313	3-Nov-07	2:00:00 AM	110.0469	3-Nov-07	2:00:00 AM	254.1406	3-Nov-07	2:00:00 AM	108.66406
3-Nov-07	12:40:00 AM	265.9375	3-Nov-07	12:40:00 AM	110.0703	3-Nov-07	12:40:00 AM	262.6563	3-Nov-07	12:40:00 AM	108.66406
2-Nov-07	11:20:00 PM	267.0313	2-Nov-07	11:20:00 PM	110.2578	2-Nov-07	11:20:00 PM	263.2031	2-Nov-07	11:20:00 PM	108.66406
2-Nov-07	10:00:00 PM	268.125	2-Nov-07	10:00:00 PM	110.3281	2-Nov-07	10:00:00 PM	264.8438	2-Nov-07	10:00:00 PM	108.66406
2-Nov-07	8:40:00 PM	265.9375	2-Nov-07	8:40:00 PM	110.375	2-Nov-07	8:40:00 PM	265.9375	2-Nov-07	8:40:00 PM	108.66406

Unit 1 T-127 Letdown temp at regen HX outlet			Unit 1 - T-145 Letdown temp at non regen HX outlet			Unit 2 T-127 Letdown temp at regen HX outlet			Unit 2 - T-145 Letdown temp at non regen HX outlet		
2-Nov-07	7:20:00 PM	267.3438	2-Nov-07	7:20:00 PM	108.3125	2-Nov-07	7:20:00 PM	265.3906	2-Nov-07	7:20:00 PM	108.66406
2-Nov-07	6:00:00 PM	264.6875	2-Nov-07	6:00:00 PM	110.0469	2-Nov-07	6:00:00 PM	265.3906	2-Nov-07	6:00:00 PM	108.66406
2-Nov-07	4:40:00 PM	265	2-Nov-07	4:40:00 PM	109.8359	2-Nov-07	4:40:00 PM	265.3906	2-Nov-07	4:40:00 PM	108.66406
2-Nov-07	3:20:00 PM	264.5313	2-Nov-07	3:20:00 PM	110.1406	2-Nov-07	3:20:00 PM	264.8438	2-Nov-07	3:20:00 PM	108.66406
2-Nov-07	2:00:00 PM	265.0781	2-Nov-07	2:00:00 PM	110.1406	2-Nov-07	2:00:00 PM	265.4688	2-Nov-07	2:00:00 PM	108.66406
2-Nov-07	12:40:00 PM	263.9844	2-Nov-07	12:40:00 PM	110.1641	2-Nov-07	12:40:00 PM	264.9219	2-Nov-07	12:40:00 PM	108.66406
2-Nov-07	11:20:00 AM	264.5313	2-Nov-07	11:20:00 AM	109.6484	2-Nov-07	11:20:00 AM	265.5469	2-Nov-07	11:20:00 AM	108.66406
2-Nov-07	10:00:00 AM	264.9219	2-Nov-07	10:00:00 AM	110.2344	2-Nov-07	10:00:00 AM	263.9063	2-Nov-07	10:00:00 AM	108.66406
2-Nov-07	8:40:00 AM	263.8281	2-Nov-07	8:40:00 AM	110.1172	2-Nov-07	8:40:00 AM	262.8125	2-Nov-07	8:40:00 AM	108.66406
2-Nov-07	7:20:00 AM	264.375	2-Nov-07	7:20:00 AM	110.0938	2-Nov-07	7:20:00 AM	262.2656	2-Nov-07	7:20:00 AM	108.66406
2-Nov-07	6:00:00 AM	264.375	2-Nov-07	6:00:00 AM	110.1641	2-Nov-07	6:00:00 AM	261.1719	2-Nov-07	6:00:00 AM	108.66406
2-Nov-07	4:40:00 AM	263.8281	2-Nov-07	4:40:00 AM	110.1875	2-Nov-07	4:40:00 AM	261.1719	2-Nov-07	4:40:00 AM	108.66406
2-Nov-07	3:20:00 AM	263.8281	2-Nov-07	3:20:00 AM	110.1875	2-Nov-07	3:20:00 AM	261.25	2-Nov-07	3:20:00 AM	108.66406
2-Nov-07	2:00:00 AM	263.8281	2-Nov-07	2:00:00 AM	110.0703	2-Nov-07	2:00:00 AM	262.8906	2-Nov-07	2:00:00 AM	108.66406
2-Nov-07	12:40:00 AM	264.375	2-Nov-07	12:40:00 AM	110.0703	2-Nov-07	12:40:00 AM	263.9844	2-Nov-07	12:40:00 AM	108.66406
1-Nov-07	11:20:00 PM	264.2969	1-Nov-07	11:20:00 PM	110.3516	1-Nov-07	11:20:00 PM	264.0625	1-Nov-07	11:20:00 PM	108.66406
1-Nov-07	10:00:00 PM	264.1406	1-Nov-07	10:00:00 PM	110.0234	1-Nov-07	10:00:00 PM	263.9844	1-Nov-07	10:00:00 PM	108.66406
1-Nov-07	8:40:00 PM	264.6875	1-Nov-07	8:40:00 PM	110	1-Nov-07	8:40:00 PM	262.8906	1-Nov-07	8:40:00 PM	108.6875
1-Nov-07	7:20:00 PM	264.6094	1-Nov-07	7:20:00 PM	110.1641	1-Nov-07	7:20:00 PM	262.0313	1-Nov-07	7:20:00 PM	108.6875
1-Nov-07	6:00:00 PM	265.1563	1-Nov-07	6:00:00 PM	109.7656	1-Nov-07	6:00:00 PM	260.9375	1-Nov-07	6:00:00 PM	108.6875
1-Nov-07	4:40:00 PM	265.7031	1-Nov-07	4:40:00 PM	110.2813	1-Nov-07	4:40:00 PM	260.9375	1-Nov-07	4:40:00 PM	108.6875
1-Nov-07	3:20:00 PM	265.1563	1-Nov-07	3:20:00 PM	110.2344	1-Nov-07	3:20:00 PM	260.9375	1-Nov-07	3:20:00 PM	108.6875
1-Nov-07	2:00:00 PM	262.9688	1-Nov-07	2:00:00 PM	109.7656	1-Nov-07	2:00:00 PM	261.4844	1-Nov-07	2:00:00 PM	108.6875
1-Nov-07	12:40:00 PM	265.1563	1-Nov-07	12:40:00 PM	109.9063	1-Nov-07	12:40:00 PM	261.7969	1-Nov-07	12:40:00 PM	108.6875
1-Nov-07	11:20:00 AM	265.4688	1-Nov-07	11:20:00 AM	110.2109	1-Nov-07	11:20:00 AM	262.3438	1-Nov-07	11:20:00 AM	108.6875
1-Nov-07	10:00:00 AM	265.5469	1-Nov-07	10:00:00 AM	110.3516	1-Nov-07	10:00:00 AM	263.9844	1-Nov-07	10:00:00 AM	108.6875
1-Nov-07	8:40:00 AM	265	1-Nov-07	8:40:00 AM	110.0703	1-Nov-07	8:40:00 AM	263.9844	1-Nov-07	8:40:00 AM	108.6875
1-Nov-07	7:20:00 AM	265.0781	1-Nov-07	7:20:00 AM	110.0234	1-Nov-07	7:20:00 AM	263.8281	1-Nov-07	7:20:00 AM	108.6875
1-Nov-07	6:00:00 AM	265	1-Nov-07	6:00:00 AM	110.0234	1-Nov-07	6:00:00 AM	262.7344	1-Nov-07	6:00:00 AM	108.6875
1-Nov-07	4:40:00 AM	265.3906	1-Nov-07	4:40:00 AM	110.1172	1-Nov-07	4:40:00 AM	263.8281	1-Nov-07	4:40:00 AM	108.6875
1-Nov-07	3:20:00 AM	265.9375	1-Nov-07	3:20:00 AM	110.2813	1-Nov-07	3:20:00 AM	263.9063	1-Nov-07	3:20:00 AM	108.6875
1-Nov-07	2:00:00 AM	265.4688	1-Nov-07	2:00:00 AM	110.3047	1-Nov-07	2:00:00 AM	262.2656	1-Nov-07	2:00:00 AM	108.6875
1-Nov-07	12:40:00 AM	264.9219	1-Nov-07	12:40:00 AM	110.2344	1-Nov-07	12:40:00 AM	262.8125	1-Nov-07	12:40:00 AM	108.6875
31-Oct-07	11:20:00 PM	264.375	31-Oct-07	11:20:00 PM	110.1406	31-Oct-07	11:20:00 PM	262.2656	31-Oct-07	11:20:00 PM	108.6875
31-Oct-07	10:00:00 PM	264.6875	31-Oct-07	10:00:00 PM	110.0938	31-Oct-07	10:00:00 PM	262.2656	31-Oct-07	10:00:00 PM	108.6875
31-Oct-07	8:40:00 PM	265.7813	31-Oct-07	8:40:00 PM	109.6953	31-Oct-07	8:40:00 PM	261.4844	31-Oct-07	8:40:00 PM	108.6875
31-Oct-07	7:20:00 PM	264.6875	31-Oct-07	7:20:00 PM	109.9766	31-Oct-07	7:20:00 PM	261.6406	31-Oct-07	7:20:00 PM	108.6875
31-Oct-07	6:00:00 PM	265.5469	31-Oct-07	6:00:00 PM	109.8594	31-Oct-07	6:00:00 PM	261.0938	31-Oct-07	6:00:00 PM	108.6875
31-Oct-07	4:40:00 PM	265.5469	31-Oct-07	4:40:00 PM	109.9297	31-Oct-07	4:40:00 PM	260.5469	31-Oct-07	4:40:00 PM	108.6875
31-Oct-07	3:20:00 PM	265.8594	31-Oct-07	3:20:00 PM	109.9766	31-Oct-07	3:20:00 PM	262.7344	31-Oct-07	3:20:00 PM	108.6875
31-Oct-07	2:00:00 PM	265.7813	31-Oct-07	2:00:00 PM	110.2578	31-Oct-07	2:00:00 PM	261.6406	31-Oct-07	2:00:00 PM	108.6875
31-Oct-07	12:40:00 PM	265.2344	31-Oct-07	12:40:00 PM	110.6563	31-Oct-07	12:40:00 PM	261.7188	31-Oct-07	12:40:00 PM	108.6875
31-Oct-07	11:20:00 AM	265.7813	31-Oct-07	11:20:00 AM	110.0469	31-Oct-07	11:20:00 AM	261.6406	31-Oct-07	11:20:00 AM	108.6875
31-Oct-07	10:00:00 AM	265.2344	31-Oct-07	10:00:00 AM	110.1641	31-Oct-07	10:00:00 AM	261.3281	31-Oct-07	10:00:00 AM	108.6875
31-Oct-07	8:40:00 AM	265.2344	31-Oct-07	8:40:00 AM	110.0938	31-Oct-07	8:40:00 AM	261.3281	31-Oct-07	8:40:00 AM	108.6875
31-Oct-07	7:20:00 AM	265.8594	31-Oct-07	7:20:00 AM	110.1641	31-Oct-07	7:20:00 AM	261.6406	31-Oct-07	7:20:00 AM	108.6875
31-Oct-07	6:00:00 AM	265.8594	31-Oct-07	6:00:00 AM	110.1172	31-Oct-07	6:00:00 AM	260.5469	31-Oct-07	6:00:00 AM	108.6875
31-Oct-07	4:40:00 AM	265.8594	31-Oct-07	4:40:00 AM	110.1406	31-Oct-07	4:40:00 AM	262.7344	31-Oct-07	4:40:00 AM	108.6875
31-Oct-07	3:20:00 AM	265.7813	31-Oct-07	3:20:00 AM	109.8594	31-Oct-07	3:20:00 AM	263.8281	31-Oct-07	3:20:00 AM	108.6875

Unit 1 T-127 Letdown temp at regen HX outlet			Unit 1 - T-145 Letdown temp at non regen HX outlet			Unit 2 T-127 Letdown temp at regen HX outlet			Unit 2 - T-145 Letdown temp at non regen HX outlet		
31-Oct-07	2:00:00 AM	266.25	31-Oct-07	2:00:00 AM	110.0234	31-Oct-07	2:00:00 AM	264.2969	31-Oct-07	2:00:00 AM	108.6875
31-Oct-07	12:40:00 AM	266.7969	31-Oct-07	12:40:00 AM	110.0469	31-Oct-07	12:40:00 AM	263.2031	31-Oct-07	12:40:00 AM	108.6875
30-Oct-07	11:20:00 PM	267.3438	30-Oct-07	11:20:00 PM	110.1172	30-Oct-07	11:20:00 PM	262.1094	30-Oct-07	11:20:00 PM	108.6875
30-Oct-07	10:00:00 PM	268.9844	30-Oct-07	10:00:00 PM	110.2813	30-Oct-07	10:00:00 PM	261.5625	30-Oct-07	10:00:00 PM	108.6875
30-Oct-07	8:40:00 PM	266.4063	30-Oct-07	8:40:00 PM	110.2813	30-Oct-07	8:40:00 PM	261.0156	30-Oct-07	8:40:00 PM	108.71094
30-Oct-07	7:20:00 PM	266.4063	30-Oct-07	7:20:00 PM	110.1641	30-Oct-07	7:20:00 PM	260.3125	30-Oct-07	7:20:00 PM	108.71094
30-Oct-07	6:00:00 PM	266.9531	30-Oct-07	6:00:00 PM	110.1641	30-Oct-07	6:00:00 PM	259.9219	30-Oct-07	6:00:00 PM	108.71094
30-Oct-07	4:40:00 PM	267.5	30-Oct-07	4:40:00 PM	110.1641	30-Oct-07	4:40:00 PM	260.4688	30-Oct-07	4:40:00 PM	108.71094
30-Oct-07	3:20:00 PM	267.6563	30-Oct-07	3:20:00 PM	110.1406	30-Oct-07	3:20:00 PM	261.0156	30-Oct-07	3:20:00 PM	108.71094
30-Oct-07	2:00:00 PM	267.1094	30-Oct-07	2:00:00 PM	110.2344	30-Oct-07	2:00:00 PM	262.6563	30-Oct-07	2:00:00 PM	108.71094
30-Oct-07	12:40:00 PM	267.2656	30-Oct-07	12:40:00 PM	110	30-Oct-07	12:40:00 PM	263.75	30-Oct-07	12:40:00 PM	108.71094
30-Oct-07	11:20:00 AM	267.1875	30-Oct-07	11:20:00 AM	110.3047	30-Oct-07	11:20:00 AM	263.75	30-Oct-07	11:20:00 AM	108.71094
30-Oct-07	10:00:00 AM	266.9531	30-Oct-07	10:00:00 AM	110.2109	30-Oct-07	10:00:00 AM	264.2969	30-Oct-07	10:00:00 AM	108.71094
30-Oct-07	8:40:00 AM	266.4063	30-Oct-07	8:40:00 AM	110.1406	30-Oct-07	8:40:00 AM	263.75	30-Oct-07	8:40:00 AM	108.71094
30-Oct-07	7:20:00 AM	266.25	30-Oct-07	7:20:00 AM	110.1641	30-Oct-07	7:20:00 AM	264.375	30-Oct-07	7:20:00 AM	108.71094
30-Oct-07	6:00:00 AM	265.7031	30-Oct-07	6:00:00 AM	109.9297	30-Oct-07	6:00:00 AM	260	30-Oct-07	6:00:00 AM	108.71094
30-Oct-07	4:40:00 AM	266.25	30-Oct-07	4:40:00 AM	110.0234	30-Oct-07	4:40:00 AM	263.2813	30-Oct-07	4:40:00 AM	108.71094
30-Oct-07	3:20:00 AM	267.4219	30-Oct-07	3:20:00 AM	110.2109	30-Oct-07	3:20:00 AM	263.2813	30-Oct-07	3:20:00 AM	108.71094
30-Oct-07	2:00:00 AM	267.1875	30-Oct-07	2:00:00 AM	110.2109	30-Oct-07	2:00:00 AM	262.7344	30-Oct-07	2:00:00 AM	108.71094
30-Oct-07	12:40:00 AM	267.1875	30-Oct-07	12:40:00 AM	110.0703	30-Oct-07	12:40:00 AM	262.1875	30-Oct-07	12:40:00 AM	108.71094
29-Oct-07	11:20:00 PM	267.5781	29-Oct-07	11:20:00 PM	110.0703	29-Oct-07	11:20:00 PM	261.9531	29-Oct-07	11:20:00 PM	108.71094
29-Oct-07	10:00:00 PM	268.125	29-Oct-07	10:00:00 PM	110.0938	29-Oct-07	10:00:00 PM	261.4063	29-Oct-07	10:00:00 PM	108.71094
29-Oct-07	8:40:00 PM	268.125	29-Oct-07	8:40:00 PM	110.3281	29-Oct-07	8:40:00 PM	261.0938	29-Oct-07	8:40:00 PM	108.71094
29-Oct-07	7:20:00 PM	267.9688	29-Oct-07	7:20:00 PM	110.375	29-Oct-07	7:20:00 PM	261.6406	29-Oct-07	7:20:00 PM	108.71094
29-Oct-07	6:00:00 PM	267.1094	29-Oct-07	6:00:00 PM	110.2813	29-Oct-07	6:00:00 PM	262.7344	29-Oct-07	6:00:00 PM	108.71094
29-Oct-07	4:40:00 PM	266.5625	29-Oct-07	4:40:00 PM	110.0469	29-Oct-07	4:40:00 PM	263.2813	29-Oct-07	4:40:00 PM	108.71094
29-Oct-07	3:20:00 PM	264.9219	29-Oct-07	3:20:00 PM	110.0234	29-Oct-07	3:20:00 PM	262.7344	29-Oct-07	3:20:00 PM	108.71094
29-Oct-07	2:00:00 PM	267.3438	29-Oct-07	2:00:00 PM	110.3281	29-Oct-07	2:00:00 PM	262.1875	29-Oct-07	2:00:00 PM	108.71094
29-Oct-07	12:40:00 PM	266.7969	29-Oct-07	12:40:00 PM	110.2109	29-Oct-07	12:40:00 PM	262.1875	29-Oct-07	12:40:00 PM	108.71094
29-Oct-07	11:20:00 AM	266.875	29-Oct-07	11:20:00 AM	110.2344	29-Oct-07	11:20:00 AM	263.2031	29-Oct-07	11:20:00 AM	108.71094
29-Oct-07	10:00:00 AM	266.3281	29-Oct-07	10:00:00 AM	110.1875	29-Oct-07	10:00:00 AM	263.0469	29-Oct-07	10:00:00 AM	108.71094
29-Oct-07	8:40:00 AM	266.875	29-Oct-07	8:40:00 AM	110.0938	29-Oct-07	8:40:00 AM	261.4063	29-Oct-07	8:40:00 AM	108.71094
29-Oct-07	7:20:00 AM	265.7031	29-Oct-07	7:20:00 AM	109.9766	29-Oct-07	7:20:00 AM	262.6563	29-Oct-07	7:20:00 AM	108.71094
29-Oct-07	6:00:00 AM	265.7031	29-Oct-07	6:00:00 AM	110	29-Oct-07	6:00:00 AM	262.1094	29-Oct-07	6:00:00 AM	108.71094
29-Oct-07	4:40:00 AM	266.9531	29-Oct-07	4:40:00 AM	110.1641	29-Oct-07	4:40:00 AM	262.1094	29-Oct-07	4:40:00 AM	108.71094
29-Oct-07	3:20:00 AM	266.9531	29-Oct-07	3:20:00 AM	110.2109	29-Oct-07	3:20:00 AM	261.0156	29-Oct-07	3:20:00 AM	108.71094
29-Oct-07	2:00:00 AM	267.5	29-Oct-07	2:00:00 AM	110.1875	29-Oct-07	2:00:00 AM	261.0156	29-Oct-07	2:00:00 AM	108.71094
29-Oct-07	12:40:00 AM	266.9531	29-Oct-07	12:40:00 AM	110.1875	29-Oct-07	12:40:00 AM	261.5625	29-Oct-07	12:40:00 AM	108.71094
28-Oct-07	11:20:00 PM	266.9531	28-Oct-07	11:20:00 PM	110.1641	28-Oct-07	11:20:00 PM	261.5625	28-Oct-07	11:20:00 PM	108.71094
28-Oct-07	10:00:00 PM	266.9531	28-Oct-07	10:00:00 PM	110.1406	28-Oct-07	10:00:00 PM	262.1094	28-Oct-07	10:00:00 PM	108.71094
28-Oct-07	8:40:00 PM	266.9531	28-Oct-07	8:40:00 PM	110.1406	28-Oct-07	8:40:00 PM	263.2031	28-Oct-07	8:40:00 PM	108.71094
28-Oct-07	7:20:00 PM	266.4063	28-Oct-07	7:20:00 PM	110	28-Oct-07	7:20:00 PM	263.4375	28-Oct-07	7:20:00 PM	108.734375
28-Oct-07	6:00:00 PM	266.9531	28-Oct-07	6:00:00 PM	109.8828	28-Oct-07	6:00:00 PM	264.5313	28-Oct-07	6:00:00 PM	108.734375
28-Oct-07	4:40:00 PM	267.5	28-Oct-07	4:40:00 PM	110.1406	28-Oct-07	4:40:00 PM	264.0625	28-Oct-07	4:40:00 PM	108.734375
28-Oct-07	3:20:00 PM	267.5	28-Oct-07	3:20:00 PM	110.3984	28-Oct-07	3:20:00 PM	262.9688	28-Oct-07	3:20:00 PM	108.734375
28-Oct-07	2:00:00 PM	267.5	28-Oct-07	2:00:00 PM	110.3047	28-Oct-07	2:00:00 PM	261.875	28-Oct-07	2:00:00 PM	108.734375
28-Oct-07	12:40:00 PM	266.9531	28-Oct-07	12:40:00 PM	110.1641	28-Oct-07	12:40:00 PM	261.0938	28-Oct-07	12:40:00 PM	108.734375
28-Oct-07	11:20:00 AM	266.7969	28-Oct-07	11:20:00 AM	110.1875	28-Oct-07	11:20:00 AM	261.0938	28-Oct-07	11:20:00 AM	108.734375
28-Oct-07	10:00:00 AM	266.25	28-Oct-07	10:00:00 AM	110.2578	28-Oct-07	10:00:00 AM	261.6406	28-Oct-07	10:00:00 AM	108.734375

Unit 1 T-127 Letdown temp at regen HX outlet			Unit 1 - T-145 Letdown temp at non regen HX outlet			Unit 2 T-127 Letdown temp at regen HX outlet			Unit 2 - T-145 Letdown temp at non regen HX outlet		
28-Oct-07	8:40:00 AM	266.4844	28-Oct-07	8:40:00 AM	110.0234	28-Oct-07	8:40:00 AM	262.0313	28-Oct-07	8:40:00 AM	108.734375
28-Oct-07	7:20:00 AM	266.4844	28-Oct-07	7:20:00 AM	110.0703	28-Oct-07	7:20:00 AM	263.125	28-Oct-07	7:20:00 AM	108.734375
28-Oct-07	6:00:00 AM	267.0313	28-Oct-07	6:00:00 AM	110.1406	28-Oct-07	6:00:00 AM	264.2188	28-Oct-07	6:00:00 AM	108.734375
28-Oct-07	4:40:00 AM	267.0313	28-Oct-07	4:40:00 AM	110.1406	28-Oct-07	4:40:00 AM	264.2188	28-Oct-07	4:40:00 AM	108.734375
28-Oct-07	3:20:00 AM	267.5781	28-Oct-07	3:20:00 AM	110.1172	28-Oct-07	3:20:00 AM	264.2188	28-Oct-07	3:20:00 AM	108.734375
28-Oct-07	2:00:00 AM	267.5781	28-Oct-07	2:00:00 AM	110.1875	28-Oct-07	2:00:00 AM	263.125	28-Oct-07	2:00:00 AM	108.734375
28-Oct-07	1:40:00 AM	267.5781	28-Oct-07	1:40:00 AM	110.2578	28-Oct-07	1:40:00 AM	263.125	28-Oct-07	1:40:00 AM	108.734375
28-Oct-07	12:20:00 AM	266.875	28-Oct-07	12:20:00 AM	110.1875	28-Oct-07	12:20:00 AM	262.0313	28-Oct-07	12:20:00 AM	108.734375
27-Oct-07	11:00:00 PM	266.875	27-Oct-07	11:00:00 PM	110.2344	27-Oct-07	11:00:00 PM	261.4063	27-Oct-07	11:00:00 PM	108.734375
27-Oct-07	9:40:00 PM	266.875	27-Oct-07	9:40:00 PM	110.1641	27-Oct-07	9:40:00 PM	261.0938	27-Oct-07	9:40:00 PM	108.734375
27-Oct-07	8:20:00 PM	266.5625	27-Oct-07	8:20:00 PM	110.0938	27-Oct-07	8:20:00 PM	261.3281	27-Oct-07	8:20:00 PM	108.734375
27-Oct-07	7:00:00 PM	266.6406	27-Oct-07	7:00:00 PM	110.0703	27-Oct-07	7:00:00 PM	261.875	27-Oct-07	7:00:00 PM	108.734375
27-Oct-07	5:40:00 PM	266.6406	27-Oct-07	5:40:00 PM	110.1406	27-Oct-07	5:40:00 PM	262.4219	27-Oct-07	5:40:00 PM	108.734375
27-Oct-07	4:20:00 PM	266.875	27-Oct-07	4:20:00 PM	110.1875	27-Oct-07	4:20:00 PM	263.5156	27-Oct-07	4:20:00 PM	108.734375
27-Oct-07	3:00:00 PM	266.875	27-Oct-07	3:00:00 PM	110.2109	27-Oct-07	3:00:00 PM	264.0625	27-Oct-07	3:00:00 PM	108.734375
27-Oct-07	1:40:00 PM	266.9531	27-Oct-07	1:40:00 PM	110.2344	27-Oct-07	1:40:00 PM	263.5156	27-Oct-07	1:40:00 PM	108.734375
27-Oct-07	12:20:00 PM	266.9531	27-Oct-07	12:20:00 PM	110.1172	27-Oct-07	12:20:00 PM	262.8125	27-Oct-07	12:20:00 PM	108.734375
27-Oct-07	11:00:00 AM	267.5781	27-Oct-07	11:00:00 AM	110.1172	27-Oct-07	11:00:00 AM	262.8125	27-Oct-07	11:00:00 AM	108.734375
27-Oct-07	9:40:00 AM	267.0313	27-Oct-07	9:40:00 AM	110.0469	27-Oct-07	9:40:00 AM	262.2656	27-Oct-07	9:40:00 AM	108.734375
27-Oct-07	8:20:00 AM	267.2656	27-Oct-07	8:20:00 AM	110.0234	27-Oct-07	8:20:00 AM	261.6406	27-Oct-07	8:20:00 AM	108.734375
27-Oct-07	7:00:00 AM	267.8125	27-Oct-07	7:00:00 AM	109.7422	27-Oct-07	7:00:00 AM	261.6406	27-Oct-07	7:00:00 AM	108.734375
27-Oct-07	5:40:00 AM	267.8125	27-Oct-07	5:40:00 AM	110.1172	27-Oct-07	5:40:00 AM	261.0938	27-Oct-07	5:40:00 AM	108.734375
27-Oct-07	4:20:00 AM	267.8125	27-Oct-07	4:20:00 AM	110.1875	27-Oct-07	4:20:00 AM	261.6406	27-Oct-07	4:20:00 AM	108.734375
27-Oct-07	3:00:00 AM	268.125	27-Oct-07	3:00:00 AM	110.1875	27-Oct-07	3:00:00 AM	262.7344	27-Oct-07	3:00:00 AM	108.75781
27-Oct-07	1:40:00 AM	267.0313	27-Oct-07	1:40:00 AM	110.0703	27-Oct-07	1:40:00 AM	264.9219	27-Oct-07	1:40:00 AM	108.75781
27-Oct-07	12:20:00 AM	268.6719	27-Oct-07	12:20:00 AM	110.0703	27-Oct-07	12:20:00 AM	264.6094	27-Oct-07	12:20:00 AM	108.75781
26-Oct-07	11:00:00 PM	267.5781	26-Oct-07	11:00:00 PM	110.2578	26-Oct-07	11:00:00 PM	264.4531	26-Oct-07	11:00:00 PM	108.75781
26-Oct-07	9:40:00 PM	268.125	26-Oct-07	9:40:00 PM	110.2344	26-Oct-07	9:40:00 PM	262.8906	26-Oct-07	9:40:00 PM	108.75781
26-Oct-07	8:20:00 PM	268.125	26-Oct-07	8:20:00 PM	110.375	26-Oct-07	8:20:00 PM	262.3438	26-Oct-07	8:20:00 PM	108.75781
26-Oct-07	7:00:00 PM	252.8125	26-Oct-07	7:00:00 PM	110.1172	26-Oct-07	7:00:00 PM	262.2656	26-Oct-07	7:00:00 PM	108.75781
26-Oct-07	5:40:00 PM	267.9688	26-Oct-07	5:40:00 PM	110.2813	26-Oct-07	5:40:00 PM	262.8125	26-Oct-07	5:40:00 PM	108.75781
26-Oct-07	4:20:00 PM	267.1875	26-Oct-07	4:20:00 PM	110.4688	26-Oct-07	4:20:00 PM	263.3594	26-Oct-07	4:20:00 PM	108.75781
26-Oct-07	3:00:00 PM	266.6406	26-Oct-07	3:00:00 PM	110.2109	26-Oct-07	3:00:00 PM	263.3594	26-Oct-07	3:00:00 PM	108.75781
26-Oct-07	1:40:00 PM	267.1094	26-Oct-07	1:40:00 PM	110.0938	26-Oct-07	1:40:00 PM	263.8281	26-Oct-07	1:40:00 PM	108.75781
26-Oct-07	12:20:00 PM	267.5	26-Oct-07	12:20:00 PM	110.1406	26-Oct-07	12:20:00 PM	264.375	26-Oct-07	12:20:00 PM	108.75781
26-Oct-07	11:00:00 AM	267.8906	26-Oct-07	11:00:00 AM	110.3047	26-Oct-07	11:00:00 AM	263.8281	26-Oct-07	11:00:00 AM	108.75781
26-Oct-07	9:40:00 AM	267.5781	26-Oct-07	9:40:00 AM	110.3047	26-Oct-07	9:40:00 AM	262.7344	26-Oct-07	9:40:00 AM	108.75781
26-Oct-07	8:20:00 AM	267.6563	26-Oct-07	8:20:00 AM	110.2109	26-Oct-07	8:20:00 AM	261.6406	26-Oct-07	8:20:00 AM	108.75781
26-Oct-07	7:00:00 AM	266.0156	26-Oct-07	7:00:00 AM	110.1406	26-Oct-07	7:00:00 AM	260.5469	26-Oct-07	7:00:00 AM	108.75781
26-Oct-07	5:40:00 AM	267.1094	26-Oct-07	5:40:00 AM	110.2813	26-Oct-07	5:40:00 AM	260.5469	26-Oct-07	5:40:00 AM	108.75781
26-Oct-07	4:20:00 AM	267.4219	26-Oct-07	4:20:00 AM	110.2109	26-Oct-07	4:20:00 AM	261.6406	26-Oct-07	4:20:00 AM	108.75781
26-Oct-07	3:00:00 AM	267.5	26-Oct-07	3:00:00 AM	110.0938	26-Oct-07	3:00:00 AM	262.2656	26-Oct-07	3:00:00 AM	108.75781
26-Oct-07	1:40:00 AM	267.8125	26-Oct-07	1:40:00 AM	110.2578	26-Oct-07	1:40:00 AM	262.4219	26-Oct-07	1:40:00 AM	108.75781
26-Oct-07	12:20:00 AM	267.2656	26-Oct-07	12:20:00 AM	110.3516	26-Oct-07	12:20:00 AM	262.2656	26-Oct-07	12:20:00 AM	108.75781
25-Oct-07	11:00:00 PM	267.2656	25-Oct-07	11:00:00 PM	109.9766	25-Oct-07	11:00:00 PM	261.7188	25-Oct-07	11:00:00 PM	108.75781
25-Oct-07	9:40:00 PM	268.125	25-Oct-07	9:40:00 PM	110.0938	25-Oct-07	9:40:00 PM	261.1719	25-Oct-07	9:40:00 PM	108.75781
25-Oct-07	8:20:00 PM	268.125	25-Oct-07	8:20:00 PM	110.1641	25-Oct-07	8:20:00 PM	261.0156	25-Oct-07	8:20:00 PM	108.75781
25-Oct-07	7:00:00 PM	267.6563	25-Oct-07	7:00:00 PM	110.0938	25-Oct-07	7:00:00 PM	261.5625	25-Oct-07	7:00:00 PM	108.75781
25-Oct-07	5:40:00 PM	268.0469	25-Oct-07	5:40:00 PM	110.0234	25-Oct-07	5:40:00 PM	262.6563	25-Oct-07	5:40:00 PM	108.75781

Unit 1 T-127
Letdown temp at regen HX outlet

25-Oct-07	4:20:00 PM	267.5
25-Oct-07	3:00:00 PM	268.2813
25-Oct-07	1:40:00 PM	267.2656
25-Oct-07	12:20:00 PM	265.0781
25-Oct-07	11:00:00 AM	266.7969
25-Oct-07	9:40:00 AM	266.7188
25-Oct-07	8:20:00 AM	266.7188
25-Oct-07	7:00:00 AM	266.1719
25-Oct-07	5:40:00 AM	266.7188
25-Oct-07	4:20:00 AM	267.1094
25-Oct-07	3:00:00 AM	266.5625
25-Oct-07	1:40:00 AM	266.875
25-Oct-07	12:20:00 AM	267.0313
24-Oct-07	11:00:00 PM	266.4844
24-Oct-07	9:40:00 PM	266.7188
24-Oct-07	8:20:00 PM	266.875
24-Oct-07	7:00:00 PM	266.875
24-Oct-07	5:40:00 PM	267.4219
24-Oct-07	4:20:00 PM	267.4219
24-Oct-07	3:00:00 PM	267.4219
24-Oct-07	1:40:00 PM	267.8906
24-Oct-07	12:20:00 PM	266.7969
24-Oct-07	11:00:00 AM	266.1719
24-Oct-07	9:40:00 AM	265.0781
24-Oct-07	8:20:00 AM	266.1719
24-Oct-07	7:00:00 AM	266.7188
24-Oct-07	5:40:00 AM	266.9531
24-Oct-07	4:20:00 AM	267.3438
24-Oct-07	3:00:00 AM	266.7969
24-Oct-07	1:40:00 AM	267.1875
24-Oct-07	12:20:00 AM	266.7969
23-Oct-07	11:00:00 PM	266.7969
23-Oct-07	9:40:00 PM	264.0625
23-Oct-07	8:20:00 PM	267.1094
23-Oct-07	7:00:00 PM	266.7969
23-Oct-07	5:40:00 PM	266.6406
23-Oct-07	4:20:00 PM	266.6406
23-Oct-07	3:00:00 PM	266.7188
23-Oct-07	1:40:00 PM	267.2656
23-Oct-07	12:20:00 PM	266.7188
23-Oct-07	11:00:00 AM	267.0313
23-Oct-07	9:40:00 AM	267.0313
23-Oct-07	8:20:00 AM	266.875
23-Oct-07	7:00:00 AM	265.2344
23-Oct-07	5:40:00 AM	267.5
23-Oct-07	4:20:00 AM	267.5
23-Oct-07	3:00:00 AM	266.9531
23-Oct-07	1:40:00 AM	267.5
23-Oct-07	12:20:00 AM	267.5781

Unit 1 - T-145
Letdown temp at non regen HX outlet

25-Oct-07	4:20:00 PM	110.1875
25-Oct-07	3:00:00 PM	110.3047
25-Oct-07	1:40:00 PM	110.3047
25-Oct-07	12:20:00 PM	110.0938
25-Oct-07	11:00:00 AM	110.1172
25-Oct-07	9:40:00 AM	110
25-Oct-07	8:20:00 AM	110.2578
25-Oct-07	7:00:00 AM	110.1406
25-Oct-07	5:40:00 AM	110.0703
25-Oct-07	4:20:00 AM	110.1875
25-Oct-07	3:00:00 AM	110.1875
25-Oct-07	1:40:00 AM	110.1875
25-Oct-07	12:20:00 AM	110.1641
24-Oct-07	11:00:00 PM	110.2344
24-Oct-07	9:40:00 PM	110.2344
24-Oct-07	8:20:00 PM	110.1406
24-Oct-07	7:00:00 PM	110.2109
24-Oct-07	5:40:00 PM	110.375
24-Oct-07	4:20:00 PM	110.2109
24-Oct-07	3:00:00 PM	110.0938
24-Oct-07	1:40:00 PM	110.1641
24-Oct-07	12:20:00 PM	110.7969
24-Oct-07	11:00:00 AM	110.4219
24-Oct-07	9:40:00 AM	110.1406
24-Oct-07	8:20:00 AM	110.0938
24-Oct-07	7:00:00 AM	110.1172
24-Oct-07	5:40:00 AM	110.1172
24-Oct-07	4:20:00 AM	110.2344
24-Oct-07	3:00:00 AM	110.2109
24-Oct-07	1:40:00 AM	109.9766
24-Oct-07	12:20:00 AM	110.6797
23-Oct-07	11:00:00 PM	110.4688
23-Oct-07	9:40:00 PM	110.1875
23-Oct-07	8:20:00 PM	110.2813
23-Oct-07	7:00:00 PM	110.1641
23-Oct-07	5:40:00 PM	110.2344
23-Oct-07	4:20:00 PM	110.2344
23-Oct-07	3:00:00 PM	110.0938
23-Oct-07	1:40:00 PM	110.2109
23-Oct-07	12:20:00 PM	110.1172
23-Oct-07	11:00:00 AM	110.1641
23-Oct-07	9:40:00 AM	110.1641
23-Oct-07	8:20:00 AM	110.1875
23-Oct-07	7:00:00 AM	110.1172
23-Oct-07	5:40:00 AM	110.1875
23-Oct-07	4:20:00 AM	110.2813
23-Oct-07	3:00:00 AM	109.25
23-Oct-07	1:40:00 AM	110.2578
23-Oct-07	12:20:00 AM	110.3047

Unit 2 T-127
Letdown temp at regen HX outlet

25-Oct-07	4:20:00 PM	264.2969
25-Oct-07	3:00:00 PM	264.375
25-Oct-07	1:40:00 PM	264.375
25-Oct-07	12:20:00 PM	263.2813
25-Oct-07	11:00:00 AM	262.7344
25-Oct-07	9:40:00 AM	263.2813
25-Oct-07	8:20:00 AM	263.0469
25-Oct-07	7:00:00 AM	263.0469
25-Oct-07	5:40:00 AM	263.5938
25-Oct-07	4:20:00 AM	263.0469
25-Oct-07	3:00:00 AM	262.8125
25-Oct-07	1:40:00 AM	261.875
25-Oct-07	12:20:00 AM	261.1719
24-Oct-07	11:00:00 PM	260.625
24-Oct-07	9:40:00 PM	261.1719
24-Oct-07	8:20:00 PM	262.4219
24-Oct-07	7:00:00 PM	263.5156
24-Oct-07	5:40:00 PM	264.0625
24-Oct-07	4:20:00 PM	264.0625
24-Oct-07	3:00:00 PM	264.6094
24-Oct-07	1:40:00 PM	261.875
24-Oct-07	12:20:00 PM	259.6875
24-Oct-07	11:00:00 AM	261.3281
24-Oct-07	9:40:00 AM	261.1719
24-Oct-07	8:20:00 AM	259.5313
24-Oct-07	7:00:00 AM	261.9531
24-Oct-07	5:40:00 AM	264.1406
24-Oct-07	4:20:00 AM	264.6875
24-Oct-07	3:00:00 AM	263.9063
24-Oct-07	1:40:00 AM	263.6719
24-Oct-07	12:20:00 AM	263.125
23-Oct-07	11:00:00 PM	262.0313
23-Oct-07	9:40:00 PM	261.4844
23-Oct-07	8:20:00 PM	262.0313
23-Oct-07	7:00:00 PM	262.5781
23-Oct-07	5:40:00 PM	262.4219
23-Oct-07	4:20:00 PM	262.8125
23-Oct-07	3:00:00 PM	262.1875
23-Oct-07	1:40:00 PM	262.1875
23-Oct-07	12:20:00 PM	263.2813
23-Oct-07	11:00:00 AM	263.8281
23-Oct-07	9:40:00 AM	264.375
23-Oct-07	8:20:00 AM	264.6094
23-Oct-07	7:00:00 AM	263.8281
23-Oct-07	5:40:00 AM	263.2813
23-Oct-07	4:20:00 AM	262.4219
23-Oct-07	3:00:00 AM	262.9688
23-Oct-07	1:40:00 AM	262.4219
23-Oct-07	12:20:00 AM	263.5156

Unit 2 - T-145
Letdown temp at non regen HX outlet

25-Oct-07	4:20:00 PM	108.75781
25-Oct-07	3:00:00 PM	108.75781
25-Oct-07	1:40:00 PM	108.75781
25-Oct-07	12:20:00 PM	108.75781
25-Oct-07	11:00:00 AM	108.75781
25-Oct-07	9:40:00 AM	108.75781
25-Oct-07	8:20:00 AM	108.75781
25-Oct-07	7:00:00 AM	108.75781
25-Oct-07	5:40:00 AM	108.75781
25-Oct-07	4:20:00 AM	108.75781
25-Oct-07	3:00:00 AM	108.75781
25-Oct-07	1:40:00 AM	108.75781
25-Oct-07	12:20:00 AM	108.75781
24-Oct-07	11:00:00 PM	108.75781
24-Oct-07	9:40:00 PM	108.75781
24-Oct-07	8:20:00 PM	108.75781
24-Oct-07	7:00:00 PM	108.75781
24-Oct-07	5:40:00 PM	108.75781
24-Oct-07	4:20:00 PM	108.75781
24-Oct-07	3:00:00 PM	108.75781
24-Oct-07	1:40:00 PM	108.75781
24-Oct-07	12:20:00 PM	108.75781
24-Oct-07	11:00:00 AM	108.75781
24-Oct-07	9:40:00 AM	108.78125
24-Oct-07	8:20:00 AM	108.78125
24-Oct-07	7:00:00 AM	108.78125
24-Oct-07	5:40:00 AM	108.78125
24-Oct-07	4:20:00 AM	108.78125
24-Oct-07	3:00:00 AM	108.78125
24-Oct-07	1:40:00 AM	108.78125
24-Oct-07	12:20:00 AM	108.78125
23-Oct-07	11:00:00 PM	108.78125
23-Oct-07	9:40:00 PM	108.78125
23-Oct-07	8:20:00 PM	108.78125
23-Oct-07	7:00:00 PM	108.78125
23-Oct-07	5:40:00 PM	108.78125
23-Oct-07	4:20:00 PM	108.78125
23-Oct-07	3:00:00 PM	108.78125
23-Oct-07	1:40:00 PM	108.78125
23-Oct-07	12:20:00 PM	108.78125
23-Oct-07	11:00:00 AM	108.78125
23-Oct-07	9:40:00 AM	108.78125
23-Oct-07	8:20:00 AM	108.78125
23-Oct-07	7:00:00 AM	108.78125
23-Oct-07	5:40:00 AM	108.78125
23-Oct-07	4:20:00 AM	108.78125
23-Oct-07	3:00:00 AM	108.78125
23-Oct-07	1:40:00 AM	108.78125
23-Oct-07	12:20:00 AM	108.78125

Unit 1 T-127 Letdown temp at regen HX outlet			Unit 1 - T-145 Letdown temp at non regen HX outlet			Unit 2 T-127 Letdown temp at regen HX outlet			Unit 2 - T-145 Letdown temp at non regen HX outlet		
22-Oct-07	11:00:00 PM	266.7969	22-Oct-07	11:00:00 PM	110.0938	22-Oct-07	11:00:00 PM	264.1406	22-Oct-07	11:00:00 PM	108.78125
22-Oct-07	9:40:00 PM	267.3438	22-Oct-07	9:40:00 PM	109.9766	22-Oct-07	9:40:00 PM	264.1406	22-Oct-07	9:40:00 PM	108.78125
22-Oct-07	8:20:00 PM	267.8906	22-Oct-07	8:20:00 PM	110.0703	22-Oct-07	8:20:00 PM	263.5938	22-Oct-07	8:20:00 PM	108.80469
22-Oct-07	7:00:00 PM	267.3438	22-Oct-07	7:00:00 PM	110.3047	22-Oct-07	7:00:00 PM	262.5	22-Oct-07	7:00:00 PM	108.80469
22-Oct-07	5:40:00 PM	267.3438	22-Oct-07	5:40:00 PM	110.2578	22-Oct-07	5:40:00 PM	261.4063	22-Oct-07	5:40:00 PM	108.80469
22-Oct-07	4:20:00 PM	267.3438	22-Oct-07	4:20:00 PM	110.1641	22-Oct-07	4:20:00 PM	261.0938	22-Oct-07	4:20:00 PM	108.80469
22-Oct-07	3:00:00 PM	267.5781	22-Oct-07	3:00:00 PM	110.2344	22-Oct-07	3:00:00 PM	261.6406	22-Oct-07	3:00:00 PM	108.80469
22-Oct-07	1:40:00 PM	267.0313	22-Oct-07	1:40:00 PM	110.3516	22-Oct-07	1:40:00 PM	261.9531	22-Oct-07	1:40:00 PM	108.80469
22-Oct-07	12:20:00 PM	264.8438	22-Oct-07	12:20:00 PM	110.0469	22-Oct-07	12:20:00 PM	262.4219	22-Oct-07	12:20:00 PM	108.80469
22-Oct-07	11:00:00 AM	266.4844	22-Oct-07	11:00:00 AM	110.2109	22-Oct-07	11:00:00 AM	262.9688	22-Oct-07	11:00:00 AM	108.80469
22-Oct-07	9:40:00 AM	266.25	22-Oct-07	9:40:00 AM	110.1641	22-Oct-07	9:40:00 AM	264.0625	22-Oct-07	9:40:00 AM	108.80469
22-Oct-07	8:20:00 AM	266.7969	22-Oct-07	8:20:00 AM	110.1875	22-Oct-07	8:20:00 AM	264.2188	22-Oct-07	8:20:00 AM	108.80469
22-Oct-07	7:00:00 AM	266.7969	22-Oct-07	7:00:00 AM	110.2109	22-Oct-07	7:00:00 AM	263.6719	22-Oct-07	7:00:00 AM	108.80469
22-Oct-07	5:40:00 AM	266.7188	22-Oct-07	5:40:00 AM	110.1406	22-Oct-07	5:40:00 AM	262.0313	22-Oct-07	5:40:00 AM	108.80469
22-Oct-07	4:20:00 AM	266.1719	22-Oct-07	4:20:00 AM	110.2109	22-Oct-07	4:20:00 AM	261.4844	22-Oct-07	4:20:00 AM	108.80469
22-Oct-07	3:00:00 AM	265.7031	22-Oct-07	3:00:00 AM	110.1641	22-Oct-07	3:00:00 AM	260.3906	22-Oct-07	3:00:00 AM	108.80469
22-Oct-07	1:40:00 AM	265.8594	22-Oct-07	1:40:00 AM	110.2578	22-Oct-07	1:40:00 AM	261.1719	22-Oct-07	1:40:00 AM	108.80469
22-Oct-07	12:20:00 AM	265.7031	22-Oct-07	12:20:00 AM	110.0469	22-Oct-07	12:20:00 AM	262.2656	22-Oct-07	12:20:00 AM	108.80469
21-Oct-07	11:00:00 PM	266.3281	21-Oct-07	11:00:00 PM	109.8828	21-Oct-07	11:00:00 PM	263.3594	21-Oct-07	11:00:00 PM	108.80469
21-Oct-07	9:40:00 PM	266.25	21-Oct-07	9:40:00 PM	110.2344	21-Oct-07	9:40:00 PM	263.3594	21-Oct-07	9:40:00 PM	108.80469
21-Oct-07	8:20:00 PM	265.7031	21-Oct-07	8:20:00 PM	110.0703	21-Oct-07	8:20:00 PM	263.9063	21-Oct-07	8:20:00 PM	108.80469
21-Oct-07	7:00:00 PM	266.5625	21-Oct-07	7:00:00 PM	110.2109	21-Oct-07	7:00:00 PM	264.2188	21-Oct-07	7:00:00 PM	108.80469
21-Oct-07	5:40:00 PM	267.1094	21-Oct-07	5:40:00 PM	110.2578	21-Oct-07	5:40:00 PM	263.4375	21-Oct-07	5:40:00 PM	108.80469
21-Oct-07	4:20:00 PM	266.5625	21-Oct-07	4:20:00 PM	110.3516	21-Oct-07	4:20:00 PM	262.3438	21-Oct-07	4:20:00 PM	108.80469
21-Oct-07	3:00:00 PM	265.625	21-Oct-07	3:00:00 PM	110.2344	21-Oct-07	3:00:00 PM	262.3438	21-Oct-07	3:00:00 PM	108.80469
21-Oct-07	1:40:00 PM	266.1719	21-Oct-07	1:40:00 PM	110.1406	21-Oct-07	1:40:00 PM	261.25	21-Oct-07	1:40:00 PM	108.80469
21-Oct-07	12:20:00 PM	265.625	21-Oct-07	12:20:00 PM	110.2109	21-Oct-07	12:20:00 PM	261.25	21-Oct-07	12:20:00 PM	108.80469
21-Oct-07	11:00:00 AM	267.2656	21-Oct-07	11:00:00 AM	110.1172	21-Oct-07	11:00:00 AM	261.25	21-Oct-07	11:00:00 AM	108.80469
21-Oct-07	9:40:00 AM	266.9531	21-Oct-07	9:40:00 AM	110.1406	21-Oct-07	9:40:00 AM	261.6406	21-Oct-07	9:40:00 AM	108.80469
21-Oct-07	8:20:00 AM	266.875	21-Oct-07	8:20:00 AM	110	21-Oct-07	8:20:00 AM	261.875	21-Oct-07	8:20:00 AM	108.80469
21-Oct-07	7:00:00 AM	267.1094	21-Oct-07	7:00:00 AM	110.2344	21-Oct-07	7:00:00 AM	262.4219	21-Oct-07	7:00:00 AM	108.828125
21-Oct-07	5:40:00 AM	266.875	21-Oct-07	5:40:00 AM	110.0703	21-Oct-07	5:40:00 AM	263.2813	21-Oct-07	5:40:00 AM	108.828125
21-Oct-07	4:20:00 AM	267.1094	21-Oct-07	4:20:00 AM	110.0234	21-Oct-07	4:20:00 AM	263.8281	21-Oct-07	4:20:00 AM	108.828125
21-Oct-07	3:00:00 AM	267.1094	21-Oct-07	3:00:00 AM	110.1641	21-Oct-07	3:00:00 AM	263.8281	21-Oct-07	3:00:00 AM	108.828125
21-Oct-07	1:40:00 AM	267.7344	21-Oct-07	1:40:00 AM	110.3281	21-Oct-07	1:40:00 AM	264.375	21-Oct-07	1:40:00 AM	108.828125
21-Oct-07	12:20:00 AM	267.1875	21-Oct-07	12:20:00 AM	110.3516	21-Oct-07	12:20:00 AM	263.9063	21-Oct-07	12:20:00 AM	108.828125
20-Oct-07	11:00:00 PM	266.6406	20-Oct-07	11:00:00 PM	110.2578	20-Oct-07	11:00:00 PM	262.9688	20-Oct-07	11:00:00 PM	108.828125
20-Oct-07	9:40:00 PM	266.3281	20-Oct-07	9:40:00 PM	110.2813	20-Oct-07	9:40:00 PM	261.7188	20-Oct-07	9:40:00 PM	108.828125
20-Oct-07	8:20:00 PM	266.3281	20-Oct-07	8:20:00 PM	110.3047	20-Oct-07	8:20:00 PM	260.625	20-Oct-07	8:20:00 PM	108.828125
20-Oct-07	7:00:00 PM	266.0938	20-Oct-07	7:00:00 PM	110.2109	20-Oct-07	7:00:00 PM	261.4063	20-Oct-07	7:00:00 PM	108.828125
20-Oct-07	5:40:00 PM	267.1875	20-Oct-07	5:40:00 PM	110	20-Oct-07	5:40:00 PM	261.0156	20-Oct-07	5:40:00 PM	108.828125
20-Oct-07	4:20:00 PM	267.7344	20-Oct-07	4:20:00 PM	110.4453	20-Oct-07	4:20:00 PM	261.25	20-Oct-07	4:20:00 PM	108.828125
20-Oct-07	3:00:00 PM	267.7344	20-Oct-07	3:00:00 PM	110.4453	20-Oct-07	3:00:00 PM	261.25	20-Oct-07	3:00:00 PM	108.828125
20-Oct-07	1:40:00 PM	269.375	20-Oct-07	1:40:00 PM	110.2109	20-Oct-07	1:40:00 PM	261.7969	20-Oct-07	1:40:00 PM	108.828125
20-Oct-07	12:20:00 PM	266.6406	20-Oct-07	12:20:00 PM	109.7422	20-Oct-07	12:20:00 PM	262.1875	20-Oct-07	12:20:00 PM	108.828125
20-Oct-07	11:00:00 AM	272.6563	20-Oct-07	11:00:00 AM	110.2578	20-Oct-07	11:00:00 AM	263.2813	20-Oct-07	11:00:00 AM	108.828125
20-Oct-07	9:40:00 AM	267.7344	20-Oct-07	9:40:00 AM	110.0703	20-Oct-07	9:40:00 AM	263.4375	20-Oct-07	9:40:00 AM	108.828125
20-Oct-07	8:20:00 AM	267.8125	20-Oct-07	8:20:00 AM	110.2578	20-Oct-07	8:20:00 AM	263.8281	20-Oct-07	8:20:00 AM	108.828125
20-Oct-07	7:00:00 AM	267.6563	20-Oct-07	7:00:00 AM	110.2109	20-Oct-07	7:00:00 AM	264.375	20-Oct-07	7:00:00 AM	108.828125

Unit 1 T-127
Letdown temp at regen HX outlet

20-Oct-07	5:40:00 AM	267.6563
20-Oct-07	4:20:00 AM	267.1094
20-Oct-07	3:00:00 AM	266.5625
20-Oct-07	1:40:00 AM	267.1094
20-Oct-07	12:20:00 AM	267.6563
19-Oct-07	11:00:00 PM	267.4219
19-Oct-07	9:40:00 PM	267.4219
19-Oct-07	8:20:00 PM	268.2031
19-Oct-07	7:00:00 PM	268.2031
19-Oct-07	5:40:00 PM	268.2031
19-Oct-07	4:20:00 PM	268.125
19-Oct-07	3:00:00 PM	266.4844
19-Oct-07	1:40:00 PM	264.8438
19-Oct-07	12:20:00 PM	267.0313
19-Oct-07	11:00:00 AM	267.0313
19-Oct-07	9:40:00 AM	265.9375
19-Oct-07	8:20:00 AM	266.4844
19-Oct-07	7:00:00 AM	266.9531
19-Oct-07	5:40:00 AM	266.9531
19-Oct-07	4:20:00 AM	266.4063
19-Oct-07	3:00:00 AM	266.4063
19-Oct-07	1:40:00 AM	267.0313
19-Oct-07	12:20:00 AM	266.9531
18-Oct-07	11:00:00 PM	267.1875
18-Oct-07	9:40:00 PM	267.7344
18-Oct-07	8:20:00 PM	267.1875
18-Oct-07	7:00:00 PM	266.6406
18-Oct-07	5:40:00 PM	267.1094
18-Oct-07	4:20:00 PM	267.1094
18-Oct-07	3:00:00 PM	266.5625
18-Oct-07	1:40:00 PM	266.875
18-Oct-07	12:20:00 PM	266.875
18-Oct-07	11:00:00 AM	266.7969
18-Oct-07	9:40:00 AM	266.7969
18-Oct-07	8:20:00 AM	266.9531
18-Oct-07	7:00:00 AM	266.4063
18-Oct-07	5:40:00 AM	266.7969
18-Oct-07	4:20:00 AM	266.7969
18-Oct-07	3:00:00 AM	266.7969
18-Oct-07	1:40:00 AM	266.25
18-Oct-07	12:20:00 AM	266.25
17-Oct-07	11:00:00 PM	266.7969
17-Oct-07	9:40:00 PM	267.3438
17-Oct-07	8:20:00 PM	268.2813
17-Oct-07	7:00:00 PM	268.4375
17-Oct-07	5:40:00 PM	268.4375
17-Oct-07	4:20:00 PM	267.8906
17-Oct-07	3:00:00 PM	267.3438
17-Oct-07	1:40:00 PM	267.7344

Unit 1 - T-145
Letdown temp at non regen HX outlet

20-Oct-07	5:40:00 AM	110.2344
20-Oct-07	4:20:00 AM	110.2109
20-Oct-07	3:00:00 AM	110.2578
20-Oct-07	1:40:00 AM	110.1641
20-Oct-07	12:20:00 AM	110.2109
19-Oct-07	11:00:00 PM	110.3984
19-Oct-07	9:40:00 PM	109.625
19-Oct-07	8:20:00 PM	110.375
19-Oct-07	7:00:00 PM	110.2109
19-Oct-07	5:40:00 PM	110.3984
19-Oct-07	4:20:00 PM	110.3984
19-Oct-07	3:00:00 PM	110.2109
19-Oct-07	1:40:00 PM	110.2344
19-Oct-07	12:20:00 PM	110.2578
19-Oct-07	11:00:00 AM	110.2578
19-Oct-07	9:40:00 AM	110.2813
19-Oct-07	8:20:00 AM	110.3047
19-Oct-07	7:00:00 AM	110.3047
19-Oct-07	5:40:00 AM	110.2813
19-Oct-07	4:20:00 AM	110.1875
19-Oct-07	3:00:00 AM	110.0703
19-Oct-07	1:40:00 AM	110.1172
19-Oct-07	12:20:00 AM	110.3281
18-Oct-07	11:00:00 PM	110.1641
18-Oct-07	9:40:00 PM	110.2578
18-Oct-07	8:20:00 PM	110.3516
18-Oct-07	7:00:00 PM	110.3516
18-Oct-07	5:40:00 PM	110.3281
18-Oct-07	4:20:00 PM	110.3047
18-Oct-07	3:00:00 PM	110.2344
18-Oct-07	1:40:00 PM	110.2344
18-Oct-07	12:20:00 PM	110.2109
18-Oct-07	11:00:00 AM	110.3516
18-Oct-07	9:40:00 AM	110.2344
18-Oct-07	8:20:00 AM	110.1641
18-Oct-07	7:00:00 AM	110.2344
18-Oct-07	5:40:00 AM	110.2344
18-Oct-07	4:20:00 AM	110.2578
18-Oct-07	3:00:00 AM	110.2578
18-Oct-07	1:40:00 AM	110.2344
18-Oct-07	12:20:00 AM	110.0703
17-Oct-07	11:00:00 PM	109.8359
17-Oct-07	9:40:00 PM	110.1172
17-Oct-07	8:20:00 PM	110.4922
17-Oct-07	7:00:00 PM	110.2578
17-Oct-07	5:40:00 PM	110.2578
17-Oct-07	4:20:00 PM	110.1406
17-Oct-07	3:00:00 PM	110.0234
17-Oct-07	1:40:00 PM	110.0469

Unit 2 T-127
Letdown temp at regen HX outlet

20-Oct-07	5:40:00 AM	263.4375
20-Oct-07	4:20:00 AM	262.8906
20-Oct-07	3:00:00 AM	266.1719
20-Oct-07	1:40:00 AM	263.8281
20-Oct-07	12:20:00 AM	262.1875
19-Oct-07	11:00:00 PM	262.6563
19-Oct-07	9:40:00 PM	262.6563
19-Oct-07	8:20:00 PM	264.2969
19-Oct-07	7:00:00 PM	264.2969
19-Oct-07	5:40:00 PM	265.3906
19-Oct-07	4:20:00 PM	265.9375
19-Oct-07	3:00:00 PM	265.5469
19-Oct-07	1:40:00 PM	265.5469
19-Oct-07	12:20:00 PM	264.4531
19-Oct-07	11:00:00 AM	263.9063
19-Oct-07	9:40:00 AM	262.8125
19-Oct-07	8:20:00 AM	262.8125
19-Oct-07	7:00:00 AM	261.7188
19-Oct-07	5:40:00 AM	262.8125
19-Oct-07	4:20:00 AM	262.2656
19-Oct-07	3:00:00 AM	262.8125
19-Oct-07	1:40:00 AM	263.9063
19-Oct-07	12:20:00 AM	265.5469
18-Oct-07	11:00:00 PM	266.0938
18-Oct-07	9:40:00 PM	266.0938
18-Oct-07	8:20:00 PM	265.5469
18-Oct-07	7:00:00 PM	263.9063
18-Oct-07	5:40:00 PM	261.1719
18-Oct-07	4:20:00 PM	262.8125
18-Oct-07	3:00:00 PM	262.2656
18-Oct-07	1:40:00 PM	263.3594
18-Oct-07	12:20:00 PM	264.4531
18-Oct-07	11:00:00 AM	265
18-Oct-07	9:40:00 AM	264.9219
18-Oct-07	8:20:00 AM	266.0156
18-Oct-07	7:00:00 AM	265.4688
18-Oct-07	5:40:00 AM	264.375
18-Oct-07	4:20:00 AM	263.8281
18-Oct-07	3:00:00 AM	262.7344
18-Oct-07	1:40:00 AM	262.7344
18-Oct-07	12:20:00 AM	264.375
17-Oct-07	11:00:00 PM	266.0156
17-Oct-07	9:40:00 PM	267.1094
17-Oct-07	8:20:00 PM	267.6563
17-Oct-07	7:00:00 PM	267.1094
17-Oct-07	5:40:00 PM	266.5625
17-Oct-07	4:20:00 PM	267.1094
17-Oct-07	3:00:00 PM	265.4688
17-Oct-07	1:40:00 PM	264.9219

Unit 2 - T-145
Letdown temp at non regen HX outlet

20-Oct-07	5:40:00 AM	108.828125
20-Oct-07	4:20:00 AM	108.828125
20-Oct-07	3:00:00 AM	108.828125
20-Oct-07	1:40:00 AM	108.828125
20-Oct-07	12:20:00 AM	108.828125
19-Oct-07	11:00:00 PM	108.828125
19-Oct-07	9:40:00 PM	108.828125
19-Oct-07	8:20:00 PM	108.828125
19-Oct-07	7:00:00 PM	108.828125
19-Oct-07	5:40:00 PM	108.828125
19-Oct-07	4:20:00 PM	108.828125
19-Oct-07	3:00:00 PM	108.828125
19-Oct-07	1:40:00 PM	108.85156
19-Oct-07	12:20:00 PM	108.85156
19-Oct-07	11:00:00 AM	108.85156
19-Oct-07	9:40:00 AM	108.85156
19-Oct-07	8:20:00 AM	108.85156
19-Oct-07	7:00:00 AM	108.85156
19-Oct-07	5:40:00 AM	108.85156
19-Oct-07	4:20:00 AM	108.85156
19-Oct-07	3:00:00 AM	108.85156
19-Oct-07	1:40:00 AM	108.85156
19-Oct-07	12:20:00 AM	108.85156
18-Oct-07	11:00:00 PM	108.85156
18-Oct-07	9:40:00 PM	108.85156
18-Oct-07	8:20:00 PM	108.85156
18-Oct-07	7:00:00 PM	108.85156
18-Oct-07	5:40:00 PM	108.85156
18-Oct-07	4:20:00 PM	108.85156
18-Oct-07	3:00:00 PM	108.85156
18-Oct-07	1:40:00 PM	108.875
18-Oct-07	12:20:00 PM	108.875
18-Oct-07	11:00:00 AM	108.875
18-Oct-07	9:40:00 AM	108.875
18-Oct-07	8:20:00 AM	108.875
18-Oct-07	7:00:00 AM	108.875
18-Oct-07	5:40:00 AM	108.875
18-Oct-07	4:20:00 AM	108.875
18-Oct-07	3:00:00 AM	108.875
18-Oct-07	1:40:00 AM	108.875
18-Oct-07	12:20:00 AM	108.875
17-Oct-07	11:00:00 PM	108.875
17-Oct-07	9:40:00 PM	108.875
17-Oct-07	8:20:00 PM	108.875
17-Oct-07	7:00:00 PM	108.875
17-Oct-07	5:40:00 PM	108.875
17-Oct-07	4:20:00 PM	108.89844
17-Oct-07	3:00:00 PM	108.89844
17-Oct-07	1:40:00 PM	108.89844

Unit 1 T-127 Letdown temp at regen HX outlet			Unit 1 - T-145 Letdown temp at non regen HX outlet			Unit 2 T-127 Letdown temp at regen HX outlet			Unit 2 - T-145 Letdown temp at non regen HX outlet		
17-Oct-07	12:20:00 PM	268.2813	17-Oct-07	12:20:00 PM	110.2109	17-Oct-07	12:20:00 PM	264.9219	17-Oct-07	12:20:00 PM	108.89844
17-Oct-07	11:00:00 AM	267.7344	17-Oct-07	11:00:00 AM	110.3984	17-Oct-07	11:00:00 AM	264.375	17-Oct-07	11:00:00 AM	108.89844
17-Oct-07	9:40:00 AM	267.1875	17-Oct-07	9:40:00 AM	110.2578	17-Oct-07	9:40:00 AM	264.375	17-Oct-07	9:40:00 AM	108.89844
17-Oct-07	8:20:00 AM	267.1875	17-Oct-07	8:20:00 AM	110.1875	17-Oct-07	8:20:00 AM	263.8281	17-Oct-07	8:20:00 AM	108.89844
17-Oct-07	7:00:00 AM	265.5469	17-Oct-07	7:00:00 AM	110.3281	17-Oct-07	7:00:00 AM	265.1563	17-Oct-07	7:00:00 AM	108.89844
17-Oct-07	5:40:00 AM	267.7344	17-Oct-07	5:40:00 AM	110.2344	17-Oct-07	5:40:00 AM	265.7031	17-Oct-07	5:40:00 AM	108.89844
17-Oct-07	4:20:00 AM	267.4219	17-Oct-07	4:20:00 AM	110.2109	17-Oct-07	4:20:00 AM	265.7031	17-Oct-07	4:20:00 AM	108.89844
17-Oct-07	3:00:00 AM	267.4219	17-Oct-07	3:00:00 AM	110.1406	17-Oct-07	3:00:00 AM	266.7969	17-Oct-07	3:00:00 AM	108.89844
17-Oct-07	1:40:00 AM	267.4219	17-Oct-07	1:40:00 AM	110.0703	17-Oct-07	1:40:00 AM	267.3438	17-Oct-07	1:40:00 AM	108.89844
17-Oct-07	12:20:00 AM	267.2656	17-Oct-07	12:20:00 AM	110.0469	17-Oct-07	12:20:00 AM	266.7969	17-Oct-07	12:20:00 AM	108.89844
16-Oct-07	11:00:00 PM	267.8125	16-Oct-07	11:00:00 PM	110.2344	16-Oct-07	11:00:00 PM	266.7969	16-Oct-07	11:00:00 PM	108.89844
16-Oct-07	9:40:00 PM	267.9688	16-Oct-07	9:40:00 PM	110.3984	16-Oct-07	9:40:00 PM	265.7031	16-Oct-07	9:40:00 PM	108.89844
16-Oct-07	8:20:00 PM	267.9688	16-Oct-07	8:20:00 PM	110.3047	16-Oct-07	8:20:00 PM	266.5625	16-Oct-07	8:20:00 PM	108.89844
16-Oct-07	7:00:00 PM	267.9688	16-Oct-07	7:00:00 PM	110.2578	16-Oct-07	7:00:00 PM	267.1875	16-Oct-07	7:00:00 PM	108.89844
16-Oct-07	5:40:00 PM	266.3281	16-Oct-07	5:40:00 PM	110.4219	16-Oct-07	5:40:00 PM	267.1875	16-Oct-07	5:40:00 PM	108.89844
16-Oct-07	4:20:00 PM	264.6875	16-Oct-07	4:20:00 PM	110.2813	16-Oct-07	4:20:00 PM	267.7344	16-Oct-07	4:20:00 PM	108.89844
16-Oct-07	3:00:00 PM	267.1875	16-Oct-07	3:00:00 PM	110.2578	16-Oct-07	3:00:00 PM	267.9688	16-Oct-07	3:00:00 PM	108.89844
16-Oct-07	1:40:00 PM	267.1875	16-Oct-07	1:40:00 PM	110.2578	16-Oct-07	1:40:00 PM	268.125	16-Oct-07	1:40:00 PM	108.89844
16-Oct-07	12:20:00 PM	267.7344	16-Oct-07	12:20:00 PM	109.6719	16-Oct-07	12:20:00 PM	267.5	16-Oct-07	12:20:00 PM	108.89844
16-Oct-07	11:00:00 AM	267.2656	16-Oct-07	11:00:00 AM	110.1875	16-Oct-07	11:00:00 AM	268.5938	16-Oct-07	11:00:00 AM	108.921875
16-Oct-07	9:40:00 AM	267.2656	16-Oct-07	9:40:00 AM	110.2109	16-Oct-07	9:40:00 AM	269.1406	16-Oct-07	9:40:00 AM	108.921875
16-Oct-07	8:20:00 AM	267.2656	16-Oct-07	8:20:00 AM	110.1641	16-Oct-07	8:20:00 AM	269.6875	16-Oct-07	8:20:00 AM	108.921875
16-Oct-07	7:00:00 AM	265.625	16-Oct-07	7:00:00 AM	110.1641	16-Oct-07	7:00:00 AM	269.6094	16-Oct-07	7:00:00 AM	108.921875
16-Oct-07	5:40:00 AM	267.2656	16-Oct-07	5:40:00 AM	110.2813	16-Oct-07	5:40:00 AM	269.0625	16-Oct-07	5:40:00 AM	108.921875
16-Oct-07	4:20:00 AM	267.2656	16-Oct-07	4:20:00 AM	110.2578	16-Oct-07	4:20:00 AM	268.125	16-Oct-07	4:20:00 AM	108.921875
16-Oct-07	3:00:00 AM	266.1719	16-Oct-07	3:00:00 AM	110.7266	16-Oct-07	3:00:00 AM	268.125	16-Oct-07	3:00:00 AM	108.921875
16-Oct-07	1:40:00 AM	266.7188	16-Oct-07	1:40:00 AM	108.1484	16-Oct-07	1:40:00 AM	267.0313	16-Oct-07	1:40:00 AM	108.921875
16-Oct-07	12:20:00 AM	266.1719	16-Oct-07	12:20:00 AM	110.1641	16-Oct-07	12:20:00 AM	265.9375	16-Oct-07	12:20:00 AM	108.921875
15-Oct-07	11:00:00 PM	266.1719	15-Oct-07	11:00:00 PM	110.1172	15-Oct-07	11:00:00 PM	266.4844	15-Oct-07	11:00:00 PM	108.921875
15-Oct-07	9:40:00 PM	266.3281	15-Oct-07	9:40:00 PM	110.1406	15-Oct-07	9:40:00 PM	266.5625	15-Oct-07	9:40:00 PM	108.921875
15-Oct-07	8:20:00 PM	266.3281	15-Oct-07	8:20:00 PM	110.1406	15-Oct-07	8:20:00 PM	267.1094	15-Oct-07	8:20:00 PM	108.921875
15-Oct-07	7:00:00 PM	266.875	15-Oct-07	7:00:00 PM	110.1641	15-Oct-07	7:00:00 PM	268.2031	15-Oct-07	7:00:00 PM	108.921875
15-Oct-07	5:40:00 PM	266.3281	15-Oct-07	5:40:00 PM	110.0469	15-Oct-07	5:40:00 PM	269.8438	15-Oct-07	5:40:00 PM	108.921875
15-Oct-07	4:20:00 PM	267.1094	15-Oct-07	4:20:00 PM	109.9063	15-Oct-07	4:20:00 PM	270.625	15-Oct-07	4:20:00 PM	108.921875
15-Oct-07	3:00:00 PM	267.1875	15-Oct-07	3:00:00 PM	110.1641	15-Oct-07	3:00:00 PM	270.2344	15-Oct-07	3:00:00 PM	108.921875
15-Oct-07	1:40:00 PM	267.4219	15-Oct-07	1:40:00 PM	110.2344	15-Oct-07	1:40:00 PM	269.6875	15-Oct-07	1:40:00 PM	108.921875
15-Oct-07	12:20:00 PM	266.3281	15-Oct-07	12:20:00 PM	110.0938	15-Oct-07	12:20:00 PM	267.5	15-Oct-07	12:20:00 PM	108.94531
15-Oct-07	11:00:00 AM	266.3281	15-Oct-07	11:00:00 AM	110.375	15-Oct-07	11:00:00 AM	266.9531	15-Oct-07	11:00:00 AM	108.94531
15-Oct-07	9:40:00 AM	266.875	15-Oct-07	9:40:00 AM	110.2109	15-Oct-07	9:40:00 AM	263.6719	15-Oct-07	9:40:00 AM	108.94531
15-Oct-07	8:20:00 AM	268.5156	15-Oct-07	8:20:00 AM	110.1875	15-Oct-07	8:20:00 AM	267.5	15-Oct-07	8:20:00 AM	108.94531
15-Oct-07	7:00:00 AM	265.7813	15-Oct-07	7:00:00 AM	110.1641	15-Oct-07	7:00:00 AM	267.1875	15-Oct-07	7:00:00 AM	108.94531
15-Oct-07	5:40:00 AM	266.6406	15-Oct-07	5:40:00 AM	110.2344	15-Oct-07	5:40:00 AM	267.1875	15-Oct-07	5:40:00 AM	108.94531
15-Oct-07	4:20:00 AM	266.5625	15-Oct-07	4:20:00 AM	110.2813	15-Oct-07	4:20:00 AM	267.7344	15-Oct-07	4:20:00 AM	108.94531
15-Oct-07	3:00:00 AM	266.0156	15-Oct-07	3:00:00 AM	110.1641	15-Oct-07	3:00:00 AM	268.2813	15-Oct-07	3:00:00 AM	108.94531
15-Oct-07	1:40:00 AM	266.4844	15-Oct-07	1:40:00 AM	110.1641	15-Oct-07	1:40:00 AM	269.9219	15-Oct-07	1:40:00 AM	108.94531
15-Oct-07	12:20:00 AM	266.4844	15-Oct-07	12:20:00 AM	110.1641	15-Oct-07	12:20:00 AM	269.2969	15-Oct-07	12:20:00 AM	108.94531
14-Oct-07	11:00:00 PM	265.9375	14-Oct-07	11:00:00 PM	110.1875	14-Oct-07	11:00:00 PM	269.2969	14-Oct-07	11:00:00 PM	108.94531
14-Oct-07	9:40:00 PM	267.5781	14-Oct-07	9:40:00 PM	110.2344	14-Oct-07	9:40:00 PM	268.2031	14-Oct-07	9:40:00 PM	108.94531
14-Oct-07	8:20:00 PM	263.75	14-Oct-07	8:20:00 PM	109.7891	14-Oct-07	8:20:00 PM	267.6563	14-Oct-07	8:20:00 PM	108.94531

Unit 1 T-127
Letdown temp at regen HX outlet

14-Oct-07	7:00:00 PM	274.9219
14-Oct-07	5:40:00 PM	264.6094
14-Oct-07	4:20:00 PM	264.7656
14-Oct-07	3:00:00 PM	263.6719
14-Oct-07	1:40:00 PM	263.5156
14-Oct-07	12:20:00 PM	269.1406
14-Oct-07	11:00:00 AM	255.7813
14-Oct-07	9:40:00 AM	267.2656
14-Oct-07	8:20:00 AM	267.2656
14-Oct-07	7:00:00 AM	267.6563
14-Oct-07	5:40:00 AM	267.1094
14-Oct-07	4:20:00 AM	266.3281
14-Oct-07	3:00:00 AM	265.7813
14-Oct-07	1:40:00 AM	265.7813
14-Oct-07	12:20:00 AM	267.9688
13-Oct-07	11:00:00 PM	254.7656
13-Oct-07	9:40:00 PM	253.6719
13-Oct-07	8:20:00 PM	256.1719
13-Oct-07	7:00:00 PM	256.7188
13-Oct-07	5:40:00 PM	257.8125
13-Oct-07	4:20:00 PM	257.1875
13-Oct-07	3:00:00 PM	250.7031
13-Oct-07	1:40:00 PM	275.4688
13-Oct-07	12:20:00 PM	271.6406
13-Oct-07	11:00:00 AM	270.5469
13-Oct-07	9:40:00 AM	270.5469
13-Oct-07	8:20:00 AM	270.5469
13-Oct-07	7:00:00 AM	270.5469
13-Oct-07	5:40:00 AM	271.0938
13-Oct-07	4:20:00 AM	270.5469
13-Oct-07	3:00:00 AM	270.5469
13-Oct-07	1:40:00 AM	270.5469
13-Oct-07	12:20:00 AM	270.5469
12-Oct-07	11:00:00 PM	271.6406
12-Oct-07	9:40:00 PM	270.5469
12-Oct-07	8:20:00 PM	269.4531
12-Oct-07	7:00:00 PM	313.8281
12-Oct-07	5:40:00 PM	268.2031
12-Oct-07	4:20:00 PM	267.5781
12-Oct-07	3:00:00 PM	267.0313
12-Oct-07	1:40:00 PM	267.0313
12-Oct-07	12:20:00 PM	268.125
12-Oct-07	11:00:00 AM	268.125
12-Oct-07	9:40:00 AM	267.5781
12-Oct-07	8:20:00 AM	267.0313
12-Oct-07	7:00:00 AM	265.3906
12-Oct-07	5:40:00 AM	267.5781
12-Oct-07	4:20:00 AM	267.5781
12-Oct-07	3:00:00 AM	268.125

Unit 1 - T-145
Letdown temp at non regen HX outlet

14-Oct-07	7:00:00 PM	110.8203
14-Oct-07	5:40:00 PM	110.375
14-Oct-07	4:20:00 PM	110.2813
14-Oct-07	3:00:00 PM	110.3281
14-Oct-07	1:40:00 PM	109.7422
14-Oct-07	12:20:00 PM	112.3203
14-Oct-07	11:00:00 AM	109.2031
14-Oct-07	9:40:00 AM	110.1641
14-Oct-07	8:20:00 AM	110.2109
14-Oct-07	7:00:00 AM	110.3984
14-Oct-07	5:40:00 AM	110.4219
14-Oct-07	4:20:00 AM	110.3516
14-Oct-07	3:00:00 AM	109.9531
14-Oct-07	1:40:00 AM	109.9297
14-Oct-07	12:20:00 AM	110.6797
13-Oct-07	11:00:00 PM	110.7969
13-Oct-07	9:40:00 PM	109.7656
13-Oct-07	8:20:00 PM	110.1875
13-Oct-07	7:00:00 PM	110.0234
13-Oct-07	5:40:00 PM	110.4219
13-Oct-07	4:20:00 PM	115.0625
13-Oct-07	3:00:00 PM	111.9922
13-Oct-07	1:40:00 PM	110.1875
13-Oct-07	12:20:00 PM	110.1406
13-Oct-07	11:00:00 AM	110.1641
13-Oct-07	9:40:00 AM	110.1875
13-Oct-07	8:20:00 AM	110.0703
13-Oct-07	7:00:00 AM	110.1875
13-Oct-07	5:40:00 AM	110.2109
13-Oct-07	4:20:00 AM	110.3984
13-Oct-07	3:00:00 AM	110.3047
13-Oct-07	1:40:00 AM	110.2578
13-Oct-07	12:20:00 AM	110.1875
12-Oct-07	11:00:00 PM	110.1641
12-Oct-07	9:40:00 PM	109.8594
12-Oct-07	8:20:00 PM	110.1641
12-Oct-07	7:00:00 PM	112.2031
12-Oct-07	5:40:00 PM	110.0469
12-Oct-07	4:20:00 PM	110.1172
12-Oct-07	3:00:00 PM	110.5625
12-Oct-07	1:40:00 PM	110.3281
12-Oct-07	12:20:00 PM	110.0469
12-Oct-07	11:00:00 AM	109.9531
12-Oct-07	9:40:00 AM	110.4922
12-Oct-07	8:20:00 AM	110.2578
12-Oct-07	7:00:00 AM	110.1641
12-Oct-07	5:40:00 AM	110.0469
12-Oct-07	4:20:00 AM	109.9766
12-Oct-07	3:00:00 AM	110.0938

Unit 2 T-127
Letdown temp at regen HX outlet

14-Oct-07	7:00:00 PM	266.9531
14-Oct-07	5:40:00 PM	267.5
14-Oct-07	4:20:00 PM	268.0469
14-Oct-07	3:00:00 PM	267.9688
14-Oct-07	1:40:00 PM	268.6719
14-Oct-07	12:20:00 PM	268.6719
14-Oct-07	11:00:00 AM	269.7656
14-Oct-07	9:40:00 AM	270.1563
14-Oct-07	8:20:00 AM	269.5313
14-Oct-07	7:00:00 AM	268.4375
14-Oct-07	5:40:00 AM	267.1094
14-Oct-07	4:20:00 AM	266.5625
14-Oct-07	3:00:00 AM	266.5625
14-Oct-07	1:40:00 AM	267.1094
14-Oct-07	12:20:00 AM	266.5625
13-Oct-07	11:00:00 PM	267.3438
13-Oct-07	9:40:00 PM	268.4375
13-Oct-07	8:20:00 PM	269.6875
13-Oct-07	7:00:00 PM	269.7656
13-Oct-07	5:40:00 PM	269.7656
13-Oct-07	4:20:00 PM	269.7656
13-Oct-07	3:00:00 PM	269.7656
13-Oct-07	1:40:00 PM	269.7656
13-Oct-07	12:20:00 PM	269.2969
13-Oct-07	11:00:00 AM	269.2969
13-Oct-07	9:40:00 AM	268.2031
13-Oct-07	8:20:00 AM	267.6563
13-Oct-07	7:00:00 AM	267.1094
13-Oct-07	5:40:00 AM	267.1094
13-Oct-07	4:20:00 AM	267.7344
13-Oct-07	3:00:00 AM	268.2813
13-Oct-07	1:40:00 AM	268.8281
13-Oct-07	12:20:00 AM	270.4688
12-Oct-07	11:00:00 PM	271.0156
12-Oct-07	9:40:00 PM	270.4688
12-Oct-07	8:20:00 PM	270.4688
12-Oct-07	7:00:00 PM	269.375
12-Oct-07	5:40:00 PM	267.2656
12-Oct-07	4:20:00 PM	268.3594
12-Oct-07	3:00:00 PM	271.0938
12-Oct-07	1:40:00 PM	271.6406
12-Oct-07	12:20:00 PM	271.0938
12-Oct-07	11:00:00 AM	270
12-Oct-07	9:40:00 AM	267.2656
12-Oct-07	8:20:00 AM	274.2188
12-Oct-07	7:00:00 AM	275.3125
12-Oct-07	5:40:00 AM	275.3125
12-Oct-07	4:20:00 AM	276.9531
12-Oct-07	3:00:00 AM	277.2656

Unit 2 - T-145
Letdown temp at non regen HX outlet

14-Oct-07	7:00:00 PM	108.96875
14-Oct-07	5:40:00 PM	108.96875
14-Oct-07	4:20:00 PM	108.96875
14-Oct-07	3:00:00 PM	108.96875
14-Oct-07	1:40:00 PM	108.96875
14-Oct-07	12:20:00 PM	108.96875
14-Oct-07	11:00:00 AM	108.96875
14-Oct-07	9:40:00 AM	108.96875
14-Oct-07	8:20:00 AM	108.96875
14-Oct-07	7:00:00 AM	108.96875
14-Oct-07	5:40:00 AM	108.99219
14-Oct-07	4:20:00 AM	108.99219
14-Oct-07	3:00:00 AM	108.99219
14-Oct-07	1:40:00 AM	108.99219
14-Oct-07	12:20:00 AM	108.99219
13-Oct-07	11:00:00 PM	108.99219
13-Oct-07	9:40:00 PM	108.99219
13-Oct-07	8:20:00 PM	109.015625
13-Oct-07	7:00:00 PM	109.015625
13-Oct-07	5:40:00 PM	109.015625
13-Oct-07	4:20:00 PM	109.015625
13-Oct-07	3:00:00 PM	109.015625
13-Oct-07	1:40:00 PM	109.015625
13-Oct-07	12:20:00 PM	109.015625
13-Oct-07	11:00:00 AM	109.015625
13-Oct-07	9:40:00 AM	109.015625
13-Oct-07	8:20:00 AM	109.03906
13-Oct-07	7:00:00 AM	109.03906
13-Oct-07	5:40:00 AM	109.03906
13-Oct-07	4:20:00 AM	109.03906
13-Oct-07	3:00:00 AM	109.03906
13-Oct-07	1:40:00 AM	109.03906
13-Oct-07	12:20:00 AM	109.0625
12-Oct-07	11:00:00 PM	109.0625
12-Oct-07	9:40:00 PM	109.0625
12-Oct-07	8:20:00 PM	109.0625
12-Oct-07	7:00:00 PM	109.0625
12-Oct-07	5:40:00 PM	109.0625
12-Oct-07	4:20:00 PM	109.08594
12-Oct-07	3:00:00 PM	109.08594
12-Oct-07	1:40:00 PM	109.109375
12-Oct-07	12:20:00 PM	109.109375
12-Oct-07	11:00:00 AM	109.13281
12-Oct-07	9:40:00 AM	109.13281
12-Oct-07	8:20:00 AM	109.13281
12-Oct-07	7:00:00 AM	109.13281
12-Oct-07	5:40:00 AM	109.13281
12-Oct-07	4:20:00 AM	109.15625
12-Oct-07	3:00:00 AM	109.15625

Unit 1 T-127 Letdown temp at regen HX outlet			Unit 1 - T-145 Letdown temp at non regen HX outlet			Unit 2 T-127 Letdown temp at regen HX outlet			Unit 2 - T-145 Letdown temp at non regen HX outlet		
12-Oct-07	1:40:00 AM	267.9688	12-Oct-07	1:40:00 AM	110.1406	12-Oct-07	1:40:00 AM	276.3281	12-Oct-07	1:40:00 AM	109.15625
12-Oct-07	12:20:00 AM	267.4219	12-Oct-07	12:20:00 AM	110.2578	12-Oct-07	12:20:00 AM	277.4219	12-Oct-07	12:20:00 AM	109.17969
11-Oct-07	11:00:00 PM	267.4219	11-Oct-07	11:00:00 PM	110.3281	11-Oct-07	11:00:00 PM	277.9688	11-Oct-07	11:00:00 PM	109.17969
11-Oct-07	9:40:00 PM	267.4219	11-Oct-07	9:40:00 PM	110.4219	11-Oct-07	9:40:00 PM	277.9688	11-Oct-07	9:40:00 PM	109.17969
11-Oct-07	8:20:00 PM	267.4219	11-Oct-07	8:20:00 PM	110.2578	11-Oct-07	8:20:00 PM	276.7969	11-Oct-07	8:20:00 PM	109.17969
11-Oct-07	7:00:00 PM	267.4219	11-Oct-07	7:00:00 PM	110.2109	11-Oct-07	7:00:00 PM	275.7031	11-Oct-07	7:00:00 PM	109.22656
11-Oct-07	5:40:00 PM	267.3438	11-Oct-07	5:40:00 PM	110.1172	11-Oct-07	5:40:00 PM	274.375	11-Oct-07	5:40:00 PM	109.22656
11-Oct-07	4:20:00 PM	267.0313	11-Oct-07	4:20:00 PM	110.1406	11-Oct-07	4:20:00 PM	275.8594	11-Oct-07	4:20:00 PM	109.27344
11-Oct-07	3:00:00 PM	267.0313	11-Oct-07	3:00:00 PM	110.0703	11-Oct-07	3:00:00 PM	276.4063	11-Oct-07	3:00:00 PM	109.296875
11-Oct-07	1:40:00 PM	267.0313	11-Oct-07	1:40:00 PM	110.0703	11-Oct-07	1:40:00 PM	277.5	11-Oct-07	1:40:00 PM	109.32031
11-Oct-07	12:20:00 PM	268.125	11-Oct-07	12:20:00 PM	110.2578	11-Oct-07	12:20:00 PM	278.0469	11-Oct-07	12:20:00 PM	111.265625
11-Oct-07	11:00:00 AM	273.5156	11-Oct-07	11:00:00 AM	111.2891	11-Oct-07	11:00:00 AM	278.2031	11-Oct-07	11:00:00 AM	111.33594
	Average	267.221			110.1695			261.3068			108.753516
	Maximum	275.4688			115.0625			278.2031			111.33594