Tennessee Valley Authority, Post Office Box 2000, Spring City, TN 37381-2000

June 18, 2010

U.S. Nuclear Regulatory Commission
ATTN: Document Control Desk
Mail Stop: OWFN P1-35
Washington, D.C. 20555-0001

Watts Bar Nuclear Plant, Unit 2 10 CFR 50.4
NRC Docket No. 50-391

Subject: WATTS BAR NUCLEAR PLANT (WBN) UNIT 2 – INSTRUMENTATION AND CONTROLS STAFF INFORMATION REQUESTS

Reference: Licensee Open Items to be Resolved for SER Approval List

The purpose of this letter is to provide TVA's responses to NRC's information requests on the "Licensee Open Items to be Resolved for SER Approval List." Enclosure 1 to this letter provides TVA's responses to the information requested by NRC.

The Attachments for Enclosure 1 are contained on the Optical Storage Media (OSM). Enclosure 1, Attachment 4, contains the proprietary Sorrento/GA Version 1.1 Software V&V Report. TVA requests that this proprietary Software V&V report be withheld from public disclosure in accordance with 10 CFR § 2.390. In accordance with TVA's agreement with NRC, the proprietary documents attached to this response are provided for NRC review without affidavits. TVA will provide the non-proprietary version and the withholding affidavit by July 14, 2010.

Enclosure 2 provides the regulatory commitments contained in this letter. I declare under the penalty of perjury that the foregoing is true and correct. Executed on the 18th day of June, 2010.

If you have any questions, please contact William Crouch at (423) 365-2004.

Sincerely,

M. Bajestani

Masoud Bajestani
Watts Bar Unit 2 Vice President

D030
NRR

Printed on recycled paper

Enclosures:

1. Responses to Licensee Open Items To Be Resolved For SER Approval
2. Regulatory Commitments

cc (Enclosures):

U. S. Nuclear Regulatory Commission
Region II
Marquis One Tower
245 Peachtree Center Ave., NE Suite 1200
Atlanta, Georgia 30303-1257

NRC Resident Inspector Unit 2
Watts Bar Nuclear Plant
1260 Nuclear Plant Road
Spring City, Tennessee 37381

GPA:ETK:CLH
bcc (Enclosures):

Lakshminarasimh Raghavan
U.S. Nuclear Regulatory Commission
MS 08H4A
One White Flint North
11555 Rockville Pike
Rockville, Maryland 20852-2738

Stephen Campbell
U.S. Nuclear Regulatory Commission
MS 08H4A
One White Flint North
11555 Rockville Pike
Rockville, Maryland 20852-2738

Patrick D. Milano, Senior Project Manager
U.S. Nuclear Regulatory Commission
MS 08H4
One White Flint North
11555 Rockville Pike
Rockville, Maryland 20852-2738

Loren R. Plisco, Deputy Regional Administrator for Construction
U. S. Nuclear Regulatory Commission
Region II
Marquis One Tower
245 Peachtree Center Ave., NE Suite 1200
Atlanta, Georgia 30303-1257

G. P. Arent, LP 5A-C*
M. Bajestani, EQB 1B-WBN*
R. R. Baron, EQB 1B-WBN*
A. S. Bhatnagar, LP 6A-C*
M. K. Brandon, ADM 1L-WBN*
W. D. Crouch, EQB 1B-WBN
D. E. Grissette, ADM 1V-WBN*
S. A. Hilmes, EQB 1B-WBN*
R. M. Krich, LP 3R-C*
D. T. Langley, OSA 1A-BLN*
A. L. Sterdis, LP 5A-C*
E. J. Vigluicci, WT 6A-K*
K. W. Whittenburg, SP 2B-C*
EDMS, WT 3B-K

*These CCs did not receive the attached documents. The attached documents can be obtained by contacting the WBN Unit 2 Licensing office.

ENCLOSURE 1

Responses To Licensee Open Items To Be Resolved For SER Approval

This enclosure provides TVA's responses to NRC's information requests contained in the "Licensee Open Items to be Resolved for SER Approval List." Each of the following NRC information requests is identified by the unique numbering system utilized in the aforementioned NRC list of open actions.

1. **NRC Request (Item No. 19)**

   Verify that the containment purge isolation radiation monitor is the same as used in Watts Bar Unit 1, or identify any hardware changes.

   TVA Response:

   TVA letter dated April 27, 2010 (Reference 5--see Reference list on page 23) responded to this request for information (Enclosure 1, Item No. 6) for the ratemeter.

   Unit 2 uses a Model RD-52 detector assembly, which is the replacement for the obsolete RD-32 detector assembly used in Unit 1. The detector assembly upgrade is due to component obsolescence and to improve reliability.

2. **NRC Request (Item No. 21)**

   For the Foxboro Spec 200 platform, identify any changes in hardware from the precedent systems. Provide the design report and the equipment qualification information.

   TVA Response:

   A vendor system description is not available for the Foxboro Spec 200 system. The hardware description and qualification documents are provided on a component level basis. A TVA-generated system description is provided to assist the reviewer. The hardware differences from the Unit 1 systems are provided in the loop and card comparison documents. As agreed with the reviewer, the component level documents are not required to be submitted at this time, but may be required later based on the review of attached documents. The following TVA-generated documents are provided (Attachment 1):

   1. Analog loop comparison.
   2. Analog card comparison.
   3. Analog system description.

ENCLOSURE 1

Responses To Licensee Open Items To Be Resolved For SER Approval

3. **NRC Request (Item No. 41)**

Please provide the following Westinghouse documents:

(1) WNA-DS-01617-WBT Rev. 1, "PAMS System Requirements Specification"

(2) WNA-DS-01667-WBT Rev. 0, "PAMS System Design Specification"

(3) WNA-CD-00018-GEN Rev. 3, "CGD for QNX version 4.5g"

Please provide the following Westinghouse documents or pointers to where the material was reviewed and approved in the CQ TR or SPM:

(4) WNA-PT-00058-GEN Rev. 0, "Testing Process for Common Q Safety systems"

(5) WNA-TP-00357-GEN Rev. 4, "Element Software Test Procedure"

TVA Response:

Items (1) and (2) were docketed by TVA letter dated April 8, 2010 (Reference 2).

Items (3), (4) and (5) WNA-CD-00018-GEN Rev. 3, "CGD for QNX version 4.5g," WNA-PT-00058-GEN Rev. 0, "Testing Process for Common Q Safety systems" and WNA-TP-00357-GEN Rev. 4, "Element Software Test Procedure" are available for audit at the Westinghouse Rockville office (Westinghouse letter WBT-D-1526, Reference 6).

4. **NRC Request (Item No. 42)**

On December 16, 2009: EICB stated to DORL: "I am having trouble reading the drawings in the binder that was given to me. Is it possible to produce a set of full size drawing that are in the FSAR?"

On February 23, 2010: EICB received a set of enlarged Chapter 7 FSAR pages (drawings) that are still unreadable.

...Please produce a large and legible set of drawing that are the ones in Chapter 7 of the FSAR.

TVA Response:

Attachment 2 provides a drawing cross reference list for Final Safety Analysis Report (FSAR) Chapter 7 and electronic copies of the legible current drawings previously submitted in full size hard copies.

Responses To Licensee Open Items To Be Resolved For SER Approval

5. **NRC Request (Item No. 43)**

The PAMS ISG6 compliance matrix supplied as Enclosure 1 to TVA letter dated February 5, 2010 is a first draft of the information needed. The shortcomings of the first three lines in the matrix are:

Line 1: *Section 11 of the Common Q topical report did include a commercial grade dedication program, but this program was not approved in the associated SE. Westinghouse stated that this was the program and it could now be reviewed. The NRC stated that TVA should identified [identify] what they believe was previously reviewed and approved.*

Line 2: *TVA stated the D3 analysis was not applicable to PAMS, but provided no justification. The NRC asked for justification since SRP Chapter 7.5 identified SRM to SECV-93-087 Item II.Q as being SRP acceptance criteria for PAMS.*

Line 3: *TVA identified that the Design report for computer integrity was completed as part of the common Q topical report. The NRC noted that this report is applicable for a system in a plant, and the CQ topical report did no[t] specifically address this PAMS system at Watts Bar Unit 2.*

NRC then concluded that TVA should go through and provide a more complete and thorough compliance matrix.

TVA Response:

Attachment 3 contains the revised Common Q PAMS ISG-6 Compliance Matrix, dated June 11, 2010, that addresses these items (Reference 13). This revised matrix resulted from input that TVA provided Westinghouse.

6. **NRC Request (Item No. 44)**

The PAMS system described in Section 7.5 of the FSAR is implemented in various manners. TVA should identify:

(1) Those variables that are implemented identical to what was reviewed and approved for Unit 1.

(2) Those variable that are implemented identical to Unit 1, but that have been changed (e.g., under 50.59) and not reviewed by the NRC.

(3) Those variables that are implemented in a manner that is unique to Unit 2 (e.g., using Common Q).

TVA should supply supporting information appropriate to the manner of implementation.

ENCLOSURE 1

Responses To Licensee Open Items To Be Resolved For SER Approval

TVA Response:

The following variable list is contained in FSAR Table 7.5-2, "Regulatory Guide 1.97 Post Accident Monitoring Variable Lists." The first two columns are excerpted from the table to simplify the response to the questions. The notes referenced in the last column follow the table and provide details of the changes or unit differences.

Var. #	Variable Name	U2 Variable Source	U1 = U2	U1 50.59?	Unique to U2?	Notes
1	Auxiliary Feedwater Flow	Foxboro Spec 200	N	N	Y	12, 19
2	Containment Lower Compartment Atmosphere Temperature	Foxboro Spec 200	N	N	Y	1, 19
3	Containment Pressure (Narrow Range)	Eagle 21	N	N	Y	12, 19
4	Containment Radiation	Rad Monitor	N	N	Y	2
5	Containment Sump Level (Wide Range)	Eagle 21	Y	Y	N	15, 19
6	Core Exit Temperature	Common Q PAMS	N	N	Y	3
7	Main Steam Line Radiation	Rad Monitor	Y	N	N	
8	Nuclear Instrumentation (Source Range)	Source Range NI	N	N	Y	14
9	RCS Pressurizer Level	Eagle 21	N	Y	Y	13, 19, 20
10	RCS Pressure Wide Range	Eagle 21	N	Y	Y	12, 19, 20
11	RCS Temperature T Cold	Eagle 21	N	Y	Y	19, 20
12	RCS Temperature T Hot	Eagle 21	N	Y	Y	19, 20
13	Refueling Water Storage Tank Level	Eagle 21	N	N	Y	12, 19
14	Steam Generator Level (Narrow Range)	Eagle 21	N	Y	Y	12, 19, 20
15	Steam Generator Pressure	Eagle 21	N	Y	Y	12, 19, 20
16	Subcooling Margin Monitor	Common Q PAMS	N	N	Y	3

ENCLOSURE 1

Responses To Licensee Open Items To Be Resolved For SER Approval

Var. #	Variable Name	U2 Variable Source	U1 = U2	U1 50.59?	Unique to U2?	Notes
17	Auxiliary Building Passive Sump Level	Unit 1 Instrument Racks	N/A	N	N/A	4
18	Containment Isolation Valve Position Indication	Valve Limit Switches	Y	N	N	
19	Containment Hydrogen Concentration	Containment Hydrogen Monitor	N	N	Y	5
20	Control Rod Position	CERPI	Y	Y	N	17
21	Nuclear Instrumentation (Intermediate Range)	Intermediate Range NI	N	N	Y	14
22	Reactor Vessel Level	Common Q PAMS	N	N	Y	3, 13
23	Containment Pressure (Wide Range)	Foxboro Spec 200	N	N	Y	12, 19, 20
24	Shield Building Vent (Noble Gas Activity)	Rad Monitor	Y	N	N	
25	ABGTS High Pressure Alarm Per Fan	Unit 1 Instruments	N/A	N	N/A	4
26	ACAS Pressure	Unit 1 Instruments	N/A	N	N/A	4
27	AFW Valve Status	Valve Limit Switches	Y	N	N	
28	Accumulator Flow Isolation Valve Status	Valve Limit Switches	Y	N	N	
29	Accumulator Tank Level	Foxboro IA	N	N	Y	8, 12, 19
30	Accumulator Tank Pressure	Foxboro IA	N	N	Y	8, 12, 19
31	Annulus Pressure	Foxboro IA	N	N	Y	8, 12, 19
32	Aux. Feed Pump Turbine Steam Supply Isolation Valve Status	Valve Limit Switches	Y	N	N	
33	Battery Current (125 V DC Vital)	Ammeter Shunt	Y	N	N	11
34	Bus Voltage (125V DC Vital)	Direct	Y	N	N	11
35	Bus Voltage (480V Shutdown)	Direct	Y	N	N	

ENCLOSURE 1

Responses To Licensee Open Items To Be Resolved For SER Approval

Var. #	Variable Name	U2 Variable Source	U1 = U2	U1 50.59?	Unique to U2?	Notes
36	Bus Voltage (6.9KV Shutdown)	PT	Y	N	N	
37	CCS Surge Tank Level	Foxboro IA	N	N	Y	8, 12, 19
38	Centrifugal Charging Pump Total Flow	Foxboro IA	N	N	Y	8, 12
39	Charging Header Flow	Foxboro IA	N	N	Y	8, 12
40	Component Cooling Water To ESF Flow	Foxboro Spec 200	N	N	Y	1, 12
41	Component Cooling Water Supply Temperature	Foxboro Spec 200	N	N	Y	1, 12
42	Condensate Storage Tank Water Level	Standalone loop	Y	N	N	11
43	Containment Air Return Fan Status	Breaker limit switches	Y	N	N	
44	Containment Cooling Valve Status	Valve Limit Switches	Y	N	N	
45	Containment Spray Flow	Eagle 21	N	N	Y	12, 19
46	Containment Spray HX Outlet - Outlet Temperature	Foxboro IA	N	N	Y	8, 12
47	Containment Sump Water Level (Narrow Range)	Foxboro IA	N	N	Y	8, 12
48	Containment Sump Water Temperature	Eagle 21	N	N	Y	19
49	Diesel Generator Power	EI-82-70A	Y	N	N	11
50	Diesel Generator Volts	EI-82-66A	Y	N	N	11
51	ECCS Valve Status	Valve Limit Switches	Y	N	N	
52	ERCW Header Flow	Foxboro Spec 200	N	N	Y	1, 11, 19
53	ERCW Supply Temperature	ICS	Y	Y	N	9, 11
54	Emergency Gas Treatment Damper Position	Damper Limit Switches	Y	N	N	
55	Emergency Ventilation Damper Status	Damper Limit Switches	Y	N	N	11
56	Hydrogen Recombiner Status – Not Used in Unit 2	N/A	N	N	Y	16

ENCLOSURE 1

Responses To Licensee Open Items To Be Resolved For SER Approval

Var. #	Variable Name	U2 Variable Source	U1 = U2	U1 50.59?	Unique to U2?	Notes
57	Igniter Group Status	Breaker Position	Y	N	N	
58	Inverter Current (120V ac Vital)	Ammeter shunt	Y	Y	N	10
59	Inverter Voltage (120V ac Vital)	Direct	Y	Y	N	10
60	Letdown Flow	Foxboro IA	N	N	Y	8, 12
61	MCR Pressure	Common Pressure Inst.	N/A	N	N/A	6, 11
62	MCR Radiation Level	Common Rad Monitors	N/A	N	N/A	6, 11
63	Main Feedwater Flow	Eagle 21	Y	Y	N	12, 19, 20
64	Normal Emergency Boration Flow	Foxboro IA	N	N	Y	8, 12
65	There is no Variable 65	N/A	N/A	N/A	N/A	
66	Pressurizer Heater Status (Electric Current)	ICS	Y	Y	N	9
67	Pressurizer Pressure Relief Valve Position (PORV, Block, and Code)	PORV & CODE – Acoustic Monitor System BLOCK – Valve Limit Switches	Y	N	N	
68	Pressurizer Relief Tank Level	Foxboro IA	N	N	Y	8, 12, 19
69	Pressurizer Relief Tank Pressure	Foxboro IA	N	N	Y	8, 12, 19
70	Pressurizer Relief Tank Temperature	Foxboro IA	N	N	Y	8, 12, 19
71	RCP Seal Injection Flow	Foxboro IA	N	N	Y	8, 12,
72	RCS Head Vent Valve Status	Foxboro Spec 200	N	N	Y	1, 19
73	RHR Heat Exchanger Outlet Temperature	Foxboro IA	N	Y	Y	8, 12, 20

ENCLOSURE 1

Responses To Licensee Open Items To Be Resolved For SER Approval

Var. #	Variable Name	U2 Variable Source	U1 = U2	U1 50.59?	Unique to U2?	Notes
74	RHR Pump Flow (RHR System Flow)	Foxboro IA	N	N	Y	8, 12
75	RHR Valve Status	Valve Limit Switches	Y	N	N	
76	Reactor Coolant Pump Status (Motor Current)	CT	Y	N	N	
77	Safety Injection Pump Flow	Foxboro IA	N	N	Y	8, 12
78	Safety Injection System Valve Status	Valve Limit Switches	Y	N	N	
79	Spent Fuel Pool Level Alarm	Common	N/A	N	N/A	6, 11
80	Spent Fuel Pool Temperature Alarm	Common	N/A	N	N/A	6, 11
81	Steam Generator Blowdown Isolation Valve Status	Valve Limit Switches	Y	N	N	
82	Steam Generator Level (Wide Range)	Eagle 21	N	Y	Y	12, 19, 20
83	Main Steam Flow	Eagle 21	N	Y	Y	12, 19, 20
84	Tritiated Drain Collector Tank Level	Common	N/A	N	N/A	6
85	Volume Control Tank Level	Foxboro IA	N	N	Y	8, 12
86	Waste Gas Decay Tank Pressure	Common	N/A	N	N/A	6
87	Radiation Exposure Meters	Not used	N/A	N/A	N/A	
88	Airborne Radio-halogens and Particulates	Portable Monitor	Y	N/A	N/A	
89	Plant and Environs Radiation	Portable Monitor	Y	N/A	N/A	
90	Plant and Environs Radioactivity	Portable Monitor	Y	N/A	N/A	
91	Auxiliary Building Vent (Noble Gas)	Common Rad Monitor	N/A	N	N/A	6
92	Auxiliary Building Vent (Flow Rate)	Common Rad Monitor	N/A	N	N/A	6
93	Auxiliary Building Vent (Particulates and Halogens)	Common Rad Monitor	N/A	N	N/A	6

ENCLOSURE 1

Responses To Licensee Open Items To Be Resolved For SER Approval

Var. #	Variable Name	U2 Variable Source	U1 = U2	U1 50.59?	Unique to U2?	Notes
94	Condenser Vacuum Pump Exhaust Vent (Flow Rate)	Foxboro IA	N	N	Y	8, 12
95	Condenser Vacuum Pump Exhaust Vent (Noble Gas)	Rad Monitor	N	N	Y	18
96	ERCW Radiation Monitors	Common Rad Monitor	N/A	N	N/A	6
97	**POST ACCIDENT SAMPLING**	N/A	N/A	N/A	N/A	
97a	Reactor Coolant Chloride Concentration	Grab sample with onsite analysis	Y	N	Y	7
97b	Reactor Coolant Dissolved Hydrogen	Grab sample with onsite analysis	Y	N	Y	7
97c	Reactor Coolant Dissolved Oxygen	Grab sample with onsite analysis	Y	N	Y	7
97d	Reactor Coolant Total Dissolved Gas	Grab sample with onsite analysis	Y	N	Y	7
97e	Reactor Coolant Boron	Grab sample with onsite analysis	Y	N	Y	7
97f	Reactor Coolant pH	Grab sample with onsite analysis	Y	N	Y	7
97g	Reactor Coolant Sample Activity	Grab sample with onsite analysis	Y	N	Y	7
97h	Reactor Coolant Gamma Spectrum	Grab sample with onsite analysis	Y	N	Y	7
98	**CONTAINMENT AIR**	N/A	N/A	N/A	N/A	
98a	Containment Air Hydrogen	Not used Deviation 22	N/A	N/A	N/A	
98b	Oxygen Content	Not Used for WBN 1 or 2	N/A	N/A	N/A	

ENCLOSURE 1

Responses To Licensee Open Items To Be Resolved For SER Approval

Var. #	Variable Name	U2 Variable Source	U1 = U2	U1 50.59?	Unique to U2?	Notes
98c	Gamma Spectrum Sample	Grab Sample	Y	N	N	
99	Shield Building Vent Flow	Rad Monitor	Y	N	N	
100	Shield Building Vent Monitor (Particulate and Iodine)	Rad Monitor	Y	N	N	
101	Steam Generator Discharge Vent (Flow Rate and Noble Gas)	Acoustic Monitor System	Y	N	Y	21
102	**METEOROLOGY**	N/A	N/A	N/A	N/A	
102a	Vertical Temperature Difference	Common	N/A	N	N/A	6
102b	Wind Direction	Common	N/A	N	N/A	6
102c	Wind Speed	Common	N/A	N	N/A	6
103	Radiation Exposure Rate	Portable Monitor	N/A	N/A	N/A	

NOTES:

1. In Unit 2, this variable is provided by the Foxboro Spec 200 hardware upgrade.
2. In Unit 2, this variable is provided by the RM1000 digital Containment High Range Radiation monitors.
3. In Unit 2, this variable is provided by the Common Q Post Accident Monitoring System (PAMS).
4. These variables are common for both units and are provided by the Unit 1 systems.
5. In Unit 2, this variable is provided by the single non-safety-related hydrogen monitor.
6. These variables are common for both units and are provided by common systems.
7. These variables are obtained via portable sampling equipment and laboratory analysis.
8. In Unit 2, this variable is provided by the non-safety-related Foxboro Intelligent Automation (IA) Distributed Control System (DCS).
9. In Unit 1, this variable was within the scope of the 10 CFR 50.59 for the Integrated Computer System (ICS) modification which replaced the plant P2500 and Emergency Response Facility Data System (ERFDS) mainframe computers.
10. In Unit 1, this variable was within the scope of the 50.59 for the vital inverter replacement modification.
11. In service for Unit 1 Operation.
12. In Unit 2, the transmitters for this variable have been changed to Rosemount, and the transmitter range has changed to 4-20ma.
13. In Unit 2, the transmitter range for this variable has changed to 4-20ma.
14. The source/intermediate range replacement in Unit 2 uses the same digital component (shutdown monitor), but the analog electronics and detectors have been upgraded.

NOTES: (Continued)

15. In Unit 1, the transmitter and transmitter configuration were changed to improve reliability due to problems with the fill fluid in the original capillary type transmitters (DCN 39608). This included changing the transmitters, recorder and indicators to 4-20ma technology. Unit 2 copied the Unit 1 change (EDCR 52419 excerpts submitted March 12, 2010).
16. For Unit 2, the hydrogen recombiners are abandoned in place.
17. Unit 1 replaced the rod position indication with the Combustion Engineering Rod Position Indication system (CERPI) in 2003 (DCN 51072) under 10 CFR 50.59. The Unit 1 system has been upgraded several times, most recently in 2009. Unit 2 copied the Unit 1 system including all upgrades through 2009.
18. In Unit 2, the separate medium and high range monitors are replaced with a single extended range monitor.
19. In Unit 2, the indicators and recorders have been replaced with 4-20ma devices.
20. In Unit 1, the recorders have been replaced due to obsolescence.
21. In Unit 2, the accelerometers and pre-amplifiers have been replaced due to obsolescence. Other components were replaced due to end of qualified life with newer models of the same components.

7. **NRC Request (Item No. 48)**

Reference 16 of the PAMS System Requirements Specification (SysRS) is the Unit 1 Precautions Limitations and Setpoints document [PLS]. When and how will the transition to the Unit 2 document be made.

TVA Response:

To ensure technical fidelity with the Unit 1 ICCM-86 system, the Unit 1 PLS was used as an input to the Common Q PAMS System Requirements Specification. This was done to ensure the Unit 2 PAMS had at a minimum the same capabilities and accuracy as the Unit 1 system.

The Unit 2 Common Q PAMS PLS section was developed based on the actual Common Q PAMS system design as reflected in the System Requirements Specification. As such, the Common Q PAMS PLS section is an output of the Common Q PAMS System Requirements Specification. Therefore, no "transition" from the Unit 1 to the Unit 2 PLS is required.

The Unit 2 PLS is scheduled to be issued December 13, 2010.

8. **NRC Request (Item No. 49)**

Please provide 00000-ICE-30156 Rev. 6. The PAMS SysRS incorporates sections of this document by reference.

TVA Response:

Per Westinghouse letter WBT-D-2024 (Reference 7), this document is available for audit at the Westinghouse Rockville office.

Responses To Licensee Open Items To Be Resolved For SER Approval

9. **NRC Request (Item No. 50)**

How should the "shall" statements [in the Common Q PAMS System Requirements Specification] outside of the bracketed requirements be interpreted?

TVA Response:

These sections are descriptive text and not requirements. The next revision of the Watts Bar Unit 2 PAMS System Requirements Specification will remove "shall" from the wording in those sections. The next revision of the Unit 2 Common Q PAMS System Requirements Specification will be provided to NRC no later than August 31, 2010.

10. **NRC Request (Item No. 54)**

Please describe all the different environments in which the RM-1000 will be required to operate. Please group these environments into two categories (a) Harsh environment, per 10 CFR 50.49, and (b) Mild Environment.

TVA Response:

The only safety-related application for the RM-1000 is the Containment High Range radiation monitors. The Containment High Range monitors will be installed in the main control room, a mild environment. The detectors will be installed remotely in the containment.

For WBN Unit 2, a mild environment is defined as:

A defined room or building zone where (1) the temperature, pressure, or relative humidity resulting from the direct effects of a design basis event (DBE) (e.g, temperature rise due to steam release) are no more severe than those which would occur during an abnormal plant operational condition, (2) the temperature will not exceed 130°F due to the indirect effects of a DBE (e.g., increased heat loads from electrical equipment), (3) the event radiation dose is less than or equal to 1×10^4 rads, and (4) the total event plus the 40 year TID (total integrated dose) is less than or equal to 5×10^4 rads. (Reference 3).

11. **NRC Request (Item No. 55)**

The "Qualification Test Report Supplement, RM-1000 Upgrades," Document No. 04508905-1SP Rev. A states that the qualification was done in accordance with IEEE 323-1974 and -1983. Please describe and justify all differences in this qualification methodology and that endorsed by Regulatory Guide 1.209. Specifically address EMI and RFI.

Responses To Licensee Open Items To Be Resolved For SER Approval

TVA Response:

Regulatory Guide (RG) 1.209 endorses IEEE 323-2003 for seismic and environmental qualification. It also endorses EPRI TR 102323 (Sept. 94) for Radio Frequency Interference (EMI-RFI) testing. The major difference between IEEE 323-2003 and IEEE 323-1974 and 1983 is that 2003 contains an allowance that harsh environment qualification testing is not required for Safety-Related Computer-Based Instrumentation and Control Systems located in mild environments. RG 1.209 accepts this allowance.

The RM-1000 was qualified to the previous versions of IEEE 323 which does not contain an allowance for harsh environment qualification. As a result, the qualification testing of the RM-1000 was done for service in a harsh environment. Therefore, the qualification testing of the RM-1000 exceeds the IEEE 323-2003 requirements of RG 1.209.

The RM-1000 was tested for Electro-Magnetic Interference and Radio Frequency Interference (EMI-RFI) in accordance with EPRI TR 102323 (Sept. 94) as documented in the Equipment Qualification Test Report submitted under TVA letter dated March 12, 2010, (Reference 4). Therefore, RM-1000 meets the requirements of RG 1.209 for EMI/RFI testing.

For WBN Unit 2, a harsh environment is defined as:

A defined room or building zone where either (1) the temperature, pressure, and relative humidity resulting from the direct effects of a DBE (e.g., temperature rise due to steam release) are more severe than those which would occur during an abnormal plant operational condition, (2) the temperature will exceed 130°F due to the indirect effects of DBE (e.g., increased heat loads from electrical equipment), (3) the event radiation dose is greater than 1×10^4 rads, or (4) the total event plus the 40-year TID is greater than 5×10^4 rads. (Reference 3)

12. NRC Request (Item No. 56)

The "RM-1000 Version 1.2 Software Verification and Validation Report," Document No. 04508006 Rev. A, is an incremental report. That is to say it addresses the verification an[d] validation for changes that resulted in Version 1.2; therefore, the NRC has not received a software verification and validation report for all other aspects of the software. Please provide the last complete verification and validation report, and all incremental reports after the complete report.

TVA Response:

The initial draft Software Verification and Validation (V&V) report document, version 1.0, was never issued.

Attachment 4 contains the latest complete proprietary version 1.1 Software V&V report (04508005). The non-proprietary version and withholding affidavit will be submitted by July 14, 2010. Submittal of the non-proprietary version and withholding affidavit is tracked by Responses to Licensee Open Items to be Resolved for SER Approval item 119.

Responses To Licensee Open Items To Be Resolved For SER Approval

The latest proprietary version is 1.2 (an incremental report that addresses the differences from the version 1.1 report), and was submitted by TVA letter dated March 12, 2010 (Reference 4). Submittal of the non-proprietary version and withholding affidavit is tracked by Responses to Licensee Open Items to be Resolved for SER Approval item 101, due June 30, 2010.

13. NRC Request (Item No. 57)

Please describe the ability to change the software of the RM-1000 at site, including all required equipment and administrative controls (e.g., temporary digital connections).

TVA Response:

Firmware/software changes are done by connecting a laptop to a port on the front of the RM-1000 and placing the Operate/Calibrate switch in the Calibrate position. The first physical barrier to access is the location of the RM-1000 in the main control room which has limited access. The RM-1000 Operate/Calibrate switch is located behind the hinged front panel. The front panel must be opened (held closed by two thumbscrews) to access the switch. This provides a physical barrier to inadvertent switch operation. The system malfunction alarm is visible locally and will annunciate on the control board when the switch is in the Calibrate position.

Administrative control of software/firmware updates is in accordance with TVA Standard Specification SS-E18.15.01, Software Requirements for Real-Time Data Acquisition and Control Computer Systems, and TVA procedures SPP-9.3, Plant Modifications and Engineering Change Control, and SPP-2.6, Computer Software Control. Approved changes to software/firmware are implemented utilizing the TVA work order process.

14. NRC Request (Item No. 58)

Please describe all digital communications used in the [RM-1000] installed configuration.

TVA Response:

There are no digital communications between the RM-1000 and any other plant system or component.

15. NRC Request (Item No. 59)

Previously TVA provided the "RM-1000 Digital Radiation Processor Technical Manual," Document No. 04508100-1TM Revision C dated October 2003. The "RM-1000 Version 1.2 Software Verification and Validation Report," Document No. 04508006 Rev. A is dated April 2008.

(a) What software version does the technical manual address?

(b) When was Version 1.2 implemented?

Responses To Licensee Open Items To Be Resolved For SER Approval

TVA Response:

(a) The technical manual is applicable to versions 1.1 and 1.2 of the software.

(b) Version 1.2 was implemented April 1, 2008.

16. NRC Request (Item No. 66)

By letter dated March 12, 2010 TVA stated that the target submittal date for the "Watts Bar 2 PAMS Software Design Description (two documents, one for flat panel display and one for AC160)" was March 31, 2010.

TVA Response:

Per Westinghouse letter WBT-D-1961 (Reference 8), these items are available for audit at the Westinghouse Rockville office.

17. NRC Request (Item No. 67)

By letter dated March 12, 2010 TVA stated that the target submittal date for the "Commercial Grade Dedication Instructions for AI687, AI688, Upgraded PC node box and flat panels." was September 28, 2010.

TVA Response:

The following status is from the revised WB2 Common Q PAMS ISG-6 Compliance Matrix submitted in response to Item 43:

a. AI687, AI688 – Scheduled for September 28, 2010

b. Upgraded PC node box and flat panel displays – Per Westinghouse letter WBT-D-2024 (Reference 7), these items are available for audit at the Westinghouse Rockville office.

c. Power supplies – Per Westinghouse letter WBT-D-2035 (Reference 12), these items are available for audit at the Westinghouse Rockville office.

18. NRC Request (Item No. 68)

By letter dated March 12, 2010 TVA stated that the target submittal date for the "Summary Report on acceptance of AI687, AI688, Upgraded PC node box, flat panels, and power supplies." was September 28, 2010.

TVA Response:

The following status is from the revised WB2 Common Q PAMS ISG-6 Compliance Matrix submitted in response to Item 43:

a. AI687, AI688 – Scheduled for September 28, 2010

b. Upgraded PC node box – Per Westinghouse letter WBT-D-2024 (Reference 7), this item is available for audit at the Westinghouse Rockville office.

c. Flat panel displays – Per Westinghouse letter WBT-D-2024 (Reference 7), this item is available for audit at the Westinghouse Rockville office.

d. Power supplies – Per Westinghouse letter WBT-D-2035 (Reference 12), these items are available for audit at the Westinghouse Rockville office.

19. NRC Request (Item No. 70)

By letter dated March 12, 2010 TVA stated that the target submittal date for the "Concept and Definition Phase V&V Report" was March 31, 2010.

TVA Response:

Per Westinghouse letter WBT-D-1961, (Reference 8) this document is available for audit at the Westinghouse Rockville office.

20. NRC Request (Item No. 77)

By letter dated March 12, 2010 TVA stated that the target submittal date for seven other documents was "TDB" [TBD]. Please provide a schedule for the docketing of the remaining documents.

TVA Response:

The availability dates for these documents are included in the revised WBN Unit 2 Common Q ISG-6 Compliance Matrix submitted in response to item 43. As stated in the March 12, 2010 letter (Reference 4), the dates in the matrix are the dates the documents will be available to TVA to prepare for submittal or being "Available for Audit". They do not reflect the dates the documents will be submitted to the NRC. Expected submittal date is two weeks after TVA receives the document.

Note: There is a typo in the matrix in line item 33. The power supply entry date says TBD. Per Westinghouse letter WBT-D-2035 (Reference 12) this item is complete and the documents are available for audit at the Westinghouse Rockville office.

21. NRC Request (Item No. 81)

The PAMS Licensing Technical Report (WNA-LI-00058-WBT Rev. 0, Dated April 2010), in Section 7, lists codes and standards applicable to the Common Q PAMS. This list contains references to old revisions of several regulatory documents, for example:

1. *RG 1.29 - September 1978 vs. March 2007*
2. *RG 1.53 - June 1973 vs. November 2003*
   a. *IEEE 379-1994 vs. -2000*
3. *RG 1.75 - September 1975 vs. February 2005*
   a. *IEEE 384-1992 vs. -1992*

4. *RG 1.100 - June 1988 vs. September 2009*
   a. *IEEE 344-1987 vs. -2004*
5. *RG 1.152 - January 1996 vs. January 2006*
   a. *IEEE 7-4.33.2-1993 vs. -2003*
6. *RG 1.168 - September 1997 vs. February 2004*
   a. *IEEE 1012-1986 vs. -1998*
   b. *IEEE 1028-1988 vs. -1997*
7. *IEEE 279-1991 vs. 603-1991*
8. *IEEE 323-1983 vs. -1974 (RG 1.89 Rev. 1 June 1984 endorses 323-1974)*

However, LIC-110, "Watts Bar Unit 2 License Application Review," states: "Design features and administrative programs that are unique to Unit 2 should then be reviewed in accordance with the current staff positions." Please identify all differences between the versions referenced and the current staff positions. Please provide a justification for the acceptability PAMS with respect to these differences.

TVA Response:

The codes and standards documents listed in Section 7 of the Common Q PAMS Licensing Technical Report are the documents that the Common Q platform was licensed to when the NRC approved the original topical report and issued the approved SER. The WBN Unit 2 Common Q PAMS is designed in accordance with the approved Common Q topical report and approved SER and the codes and standards on which the SER was based. Since the current versions referenced are not applicable to WBN Unit 2, there is no basis for a comparison review.

22. NRC Request (Item No. 84)

Please provide: TVA Design Criteria WB-DC-30-7 Rev. 22, Post Accident Monitoring Instrumentation.

TVA Response:

Attachment 5 contains Design Criteria WB-DC-30-7 Rev. 22, Post Accident Monitoring Instrumentation.

23. NRC Request (Item No. 86)

The PAMS Licensing Technical Report (WNA-LI-00058-WBT Rev. 0, Dated April 2010), in Section 6, lists references applicable to the Common Q PAMS. This list contains references to old revisions of several regulatory documents, for example:

(1) DI&C-ISG04 - Rev. 0 (ML072540138) vs. Rev. 1 (ML083310185)

However, LIC-110, "Watts Bar Unit 2 License Application Review," states: "Design features and administrative programs that are unique to Unit 2 should then be reviewed in accordance with the current staff positions." Please identify all differences between the versions referenced and the current staff positions. Please provide a justification for the acceptability PAMS with respect to these differences.

Responses To Licensee Open Items To Be Resolved For SER Approval

TVA Response:

The regulatory documents listed in the Common Q PAMS Licensing Technical Report are the documents that the Common Q platform was licensed to when the NRC approved the original topical report and issued the approved SER. The WBN Unit 2 Common Q PAMS is designed in accordance with the approved Common Q topical report and approved SER and the regulatory documents on which the SER was based. Since the current versions referenced are not applicable to WBN Unit 2, there is no basis for a comparison review.

24. NRC Request (Item No. 87)

Regarding the Sorrento RM-1000 Digital Radiation Processor: Please identify the model and version to be installed. Please include explicit identification of software version.

TVA Response:

The rate meter is model RM-1000. The software is version 1.2

25. NRC Request (Item No. 88)

Regarding the Sorrento RM-1000 Digital Radiation Processor: Please provide prior software V&V reports. The latest report only addresses Version 1.2.

TVA Response:

See response to Item 12.

26. NRC Request (Item No. 91)

TVA to submit excerpts of EDCRs 52421, 52987, 52321, 52351 and 52601

TVA Response:

1. Attachment 6 contains the EDCR 52421 excerpt.

2. Attachment 7 contains the EDCR 52987 excerpt.

3. EDCR 52321 is scheduled to be issued Oct 13, 2010. Submittal of EDCR 52321 excerpts is tracked by Responses to Licensee Open Items to be Resolved for SER Approval item 103 due October 31, 2010.

4. EDCR 52351 is scheduled to be issued November 30, 2010. Submittal of EDCR 52351 excerpts is tracked by Responses to Licensee Open Items to be Resolved for SER Approval item 104 due December 15, 2010.

5. Attachment 8 contains the EDCR 52601 (RVLIS) excerpt. The RVLIS EDCR has been split into two EDCRs. The second EDCR is 55385. Submittal of EDCR 55385 excerpts is tracked by "Responses to Licensee Open Items to be Resolved for SER Approval" item 118, due November 15, 2010.

Responses To Licensee Open Items To Be Resolved For SER Approval

27. NRC Request (Item No. 102)

Provide a schedule for resolution of items 80, 82 and 83

TVA Response:

Item 80 – no later than July 23, 2010.

Item 82 – no later than July 23, 2010.

Item 83 – no later than July 23, 2010.

28. NRC Request (Item No. 106)

Confirm that the Unit 1 and Unit 2 CERPI systems utilize the same processor (AC110 or AC160).

TVA Response:

Westinghouse Unit 2 Drawing 6D31420 (Reference 9), Watts Bar 2- CERPI AC160 Chassis Configuration, Rev. 2, shows the processors are Model AC160, which are the same that are utilized for Unit 1, as shown on Westinghouse drawing 2D82995 Rev. 0 (Reference 10), Watts Bar CERPI AC 160 Chassis Configuration.

29. NRC Request (Item No. 107)

Describe any control functions associated with the RM-1000 radiation monitors.

TVA Response:

The RM-1000 radiation monitors do not provide any control functions.

30. NRC Request (Item No. 111)

The reviewer was unable to locate information (SER) on the plant computer or annunciator systems and asked us to provide the location within the FSAR where these systems are described.

TVA Response:

The annunciator system is not described in the WBN Unit 1 Updated FSAR (UFSAR). As such it is not included in the WBN Unit 2 FSAR.

With the exception of the ERFDS functions in Section 7.5, the plant computer is not described in the WBN Unit 1 UFSAR. As such it is not included in the WBN Unit 2 FSAR.

31. NRC Request (Item No. 113)

Are the new model Eagle 21 power supplies installed in Unit 1?

TVA Response:

Yes. Attachment 9 provides a work order excerpt and unit difference form.

32. NRC Request (Item No. 114)

Provide the resolution of the Eagle 21 Rack 5 lockup on update issue.

TVA Response:

The following non-proprietary response was developed from proprietary Westinghouse letter WBT-D-2027 (Reference 11), which provided the resolution of this issue. Westinghouse approved this non-proprietary response via e-mail from A. Drake to M. Clark on June 15, 2010.

As documented in WBT-D-1917, "Eagle-21 Rack 5 LCP Diagnostic Failures", (Reference 14), Westinghouse noted an occasional diagnostic failure while performing the parameter update function on Rack 5 during the factory acceptance testing for the Unit 2 Eagle-21 System.

Subsequently, TVA provided to Westinghouse for testing and examination, a Loop Control Processor (LCP) board removed by TVA from Unit 1 Rack 5 for life cycle-based preventive maintenance. TVA personnel familiar with Unit 1 had indicated they had not experienced problems when performing parameter updates on Unit 1 Rack 5.

Based on Westinghouse examination and testing, a difference in hardware was identified between the Unit 1 LCP shipped to Westinghouse, the new Unit 2 Rack 5 LCP, and an older LCP (older than the Unit 1 LCP) from the Westinghouse Eagle 21 test bed. A different version of an 80287 math coprocessor chip (80287 XL) was installed on the Unit 1 LCP. This version of the 80287 had an improved specification for calculation speed. Use of this chip on both the Unit 2 LCP and the test bed LCP allowed proper performance of the LCP when making parameter updates using the Unit 1/Unit 2 Rack 5 software. Also, use of the slower 80287 on any of the three LCP boards caused failure in parameter update with the Unit 1/Unit 2 Rack 5 software.

Through investigation of historical records, Westinghouse found that the 80287 XL chip had been evaluated and used by its former Process Control Division (now Emerson) for this application, but the current Westinghouse documentation had not been updated. This part has now been evaluated, and the Westinghouse documentation and drawing have been revised to allow use of the 80287 XL coprocessor. The 80287 XL coprocessor has been installed on the Unit 2 Rack 5 LCP, and the appropriate factory acceptance testing has been successfully conducted using this updated board. Additionally, the LCP boards in the balance of the Unit 2 racks have been updated with the 80287 XL coprocessor.

33. NRC Request (Item No. 115)

Provide a list of digital 1E systems that have a digital communications path to non safety related systems and if it has:

a. Been reviewed before for unit 1
b. Or been installed in unit 1 under 50.59, or
c. is unique to unit 2

ENCLOSURE 1

Responses To Licensee Open Items To Be Resolved For SER Approval

TVA Response:

Safety Related System	Non Safety Related Interface	Unit 1 Review	Unit 2 Interface Review
Eagle 21	Plant Computer (ICS)	While Eagle was installed prior to Unit 1 Licensing, the interfaces to the ERFDS/P2500 main frame computers were analog. With the replacement of the ERFDS/P2500 mainframes by the Integrated Computer System (ICS), the interface became digital. Since ICS was installed under 50.59, the Unit 1 digital communications interface has not been reviewed.	The digital Eagle to ICS interface in Unit 1 is via node boxes on a ring network. The interface for Unit 2 is direct from the Eagle cabinets to a network switch on a star network. While the Unit 2 ICS computer hardware interface is different than Unit 1, the Eagle interface is the same in both units; via a mono-directional communication path described in Reference 1. Due to the difference in the ICS connection, the Unit 2 interface is unique.
Common Q	Plant Computer (ICS)	Common Q is not installed in Unit 1	The Common Q to Plant Computer interface is via the safety-related Maintenance and Test Panel (MTP) fiber optic interface which blocks all except the minimum low level TCP/IP commands necessary to support communications. A detailed description of the MTP communications is contained in WNA-LI-00058-WBT, Revision 0, Watts Bar Unit 2 (WBN2) Post Accident Monitoring System (PAMS) Licensing Technical Report submitted under Reference 2. Additional communication isolation is provided by non-safety-related data diodes (one for each train). The Common Q to ICS interface is unique to Unit 2.

34. TVA Identified (Item No. 127)

Provide the status of the Eagle 21 Rack 2 RTD accuracy issue.

TVA Response:

The following non-proprietary response was developed from proprietary Westinghouse letter WBT-D-2034 (Reference 15), which provided the details of this issue. Westinghouse approved this non-proprietary response via e-mail from A. Drake to M. Clark on June 16, 2010.

During the Watts Bar Unit 2 Eagle 21 Factory Acceptance Test (FAT) of Rack 2, it was discovered that the narrow range Resistance Temperature Detector (RTD) temperature inputs were consistently reading about 0.2° F higher than expected. Investigation revealed that these inputs are configured in the Loop Calculation Processor software as a shared RTD. This is incorrect. Rack 2 RTDs are not shared. Racks 6, 10 and 13 RTDs are shared. Configuration as a shared RTD input alters the equation used for the temperature calculation. Watts Bar Unit 1 uses identical software to Unit 2.

Further investigation by Westinghouse showed this configuration error causes the Narrow Range Temperatures for only Division I to read 0.2 to 0.27° F higher over the Narrow Range span of 510-650° F. The 0.2° F shift affects T_{hot} and T_{cold} equally and thus will not affect the indication of Delta T. T_{avg} will indicate high by 0.2° F, which will decrease the Over temperature and Overpower set points; which is in the conservative direction. The indicated high 0.2° F T_{avg}, if selected for control (via auctioneered high), would cause the controlling temperature to result in an actual temperature 0.2° F low; which is in the conservative direction for consideration of DNB. The T_{avg} - Low-Low function (P-12) would be non-conservative by 0.2° F, which would cause the permissive/interlock for block of steam dump post reactor trip to be delayed slightly via that channel. This delay would not be considered significant. Westinghouse will discuss this issue with Watts Bar Unit 1 personnel in accordance with their Part 21/Potential Issue process.

Westinghouse initiated a corrective action item (CAP # 10-140-M021) and performed an Evaluation of Potential Nuclear Safety Issue. Based upon the above investigations, Westinghouse determined that this issue does not represent a substantial safety hazard at Watts Bar Unit 1, even if left uncorrected.

A report on the final resolution of the Eagle 21 RTD input issue will be provided no later than December 3, 2010.

References:

1. TVA letter to NRC dated August 25, 2008, "Watts Bar Nuclear Plant (WBN) - Unit 2 – Westinghouse Eagle 21 Process Protection System, Response to NRC I&C Branch Request for Additional Information (TAC No. MD6311)" (ML082410088) (T02 080826 001)

References: (Continued)

2. TVA letter to NRC dated April 8, 2010, "Watts Bar Nuclear Plant (WBN) Unit 2 – Additional Information Regarding Final Safety Analysis Report (FSAR), Chapter 7, "Instrumentation And Controls" Review – Requested Common Q Proprietary Documents (T02 100408 001)

3. Watts Bar Design Criteria Document WB-DC-40-54, Environmental Qualification To 10CFR50.49, Rev. 4.

4. TVA letter to NRC dated March 12, 2010, "Watts Bar Nuclear Plant (WBN) Unit 2 – Additional Information Regarding Final Safety Analysis Report (FSAR), Chapter 7, 'Instrumentation And Controls' Review – Requested Common Q Proprietary Documents" (T02 100312 001)

5. TVA letter to NRC dated April 27, 2010, "Watts Bar Nuclear Plant (WBN) Unit 2 – Staff Information Requests Resulting From NRC December 15, 2009, Meeting With Tennessee Valley Authority (TVA) Regarding Digital Instrumentation And Controls Review And NRC Clarifications To The Requests Provided During February 18, 2010, Telephone Conference Call (TAC No. ME0853)" (T02 100427 002)

6. Westinghouse letter WBT-D-1526, Tennessee Valley Authority Watts Bar Nuclear Plant Unit 2, NRC Access to Common Q Documents at the Westinghouse Rockville Office

7. Westinghouse letter WBT-D-2024, Tennessee Valley Authority Watts Bar Nuclear Plant Unit 2, NRC Access to Common Q Documents at the Westinghouse Rockville Office

8. Westinghouse letter WBT-D-1961, Tennessee Valley Authority Watts Bar Nuclear Plant Unit 2, NRC Access to Common Q Documents at the Westinghouse Rockville Office

9. Westinghouse Unit 2 Drawing 6D31420 Revision 2, Watts Bar 2- CERPI AC160 Chassis Configuration

10. Westinghouse drawing 2D82995 Rev. 0, Watts Bar CERPI AC 160 Chassis Configuration

11. Westinghouse letter WBT-D-2027, Tennessee Valley Authority Watts Bar Nuclear Plant Unit 2, Unit 2 Eagle-21 Rack 5 Testing and Hardware Release

12. Westinghouse letter WBT-D-2035, Tennessee Valley Authority Watts Bar Nuclear Plant Unit 2, NRC Access to Common Q Documents at the Westinghouse Rockville Office

13. Westinghouse letter WBT-D-2044, Tennessee Valley Authority Watts Bar Nuclear Plant Unit 2, Updated Common Q PAMS ISG-6 Compliance Matrix

14. Westinghouse letter WBT-D-1917, Tennessee Valley Authority Watts Bar Nuclear Plant Unit 2, Eagle -21 Rack 5 LCP Diagnostic Failures

15. Westinghouse letter WBT-D-2034, Tennessee Valley Authority Watts Bar Nuclear Plant Unit 2, Eagle-21 Rack 2 Deviation and Release

ENCLOSURE 1

Responses To Licensee Open Items To Be Resolved For SER Approval

ATTACHMENT 1

(This Attachment contained on the OSM)

1. Analog Loop Comparison

2. Analog Card Comparison

3. Analog System Description

Foxboro Analog Spec 200 Unit 1 to Unit 2 Loop Comparison
5/27/2010

System Number	Loop Number	Loop Function	Same as Unit 1 Y/N	Comments	Change Package No.
46	2-F-46-57	Turbine Driven AFW Pump Control	Y	Flow control Loop	52343
3	2-P-3-122A	Auxiliary Feedwater Pump 2A-A Differental Pressure	N	Pressure Loop	52427
3	2-P-3-122C	Auxiliary Feedwater Pump 2A-A Differental Pressure Aux Control	Y	Pressure Loop	52343
3	2-P-3-132A	Auxiliary Feedwater Pump 2B-B Differential Pressure	N	Pressure Loop	52427
3	2-P-3-132C	Auxiliary Feedwater Pump 2B-B Differental Pressure Aux Control	Y	Pressure Loop	52343
3	2-F-3-147A	Steam Generator 3 Auxiliary Feedwater Flow	N	Flow control Loop	52427
3	2-F-3-147B	Steam Generator 3 Auxiliary Feedwater Flow	N	Flow control Loop	52343
3	2-F-3-155A	Steam Generator 2 Auxiliary Feedwater Flow	N	Flow control Loop	52343
3	2-F-3-155B	Steam Generator 2 Auxiliary Feedwater Flow	N	Flow control Loop	52427
3	2-F-3-163A	Steam Generator 1 Auxiliary Feedwater Flow	N	Flow control Loop	52427
3	2-F-3-163B	Steam Generator 1 Auxiliary Feedwater Flow	N	Flow control Loop	52343
3	2-F-3-170A	Steam Generator 4 Auxiliary Feedwater Flow	N	Flow control Loop	52343
3	2-F-3-170B	Steam Generator 4 Auxiliary Feedwater Flow	N	Flow control Loop	52427
30	2-P-30-310	Containment Pressure (Train A)	N	Pressure Loop	52427
30	2-P-30-311	Containment Pressure (Train B)	N	Pressure Loop	52427
30	2-T-30-1032	Lower Containment Ambient Temperature (Train A)	N	Temperature Loop	52427

Foxboro Analog Spec 200 Unit 1 to Unit 2 Loop Comparison
5/27/2010

System Number	Loop Number	Loop Function	Same as Unit 1 Y/N	Comments	Change Package No.
30	2-T-30-1033	Lower Containment Ambient Temperature (Train B)	N	Temperature Loop	52427
30	2-T-30-1034	Lower Containment Ambient Temperature (Train A)	N	Temperature Loop	52427
30	2-T-30-1035	Lower Containment Ambient Temperature (Train B)	N	Temperature Loop	52427
70	2-F-70-165A	RHR Heat Exchanger 2B-B Supply Header Flow	N	Flow Loop	52427
70	2-F-70-215A & -215B	Sample Heat Exchanger Header Differential Flow -	N	Flow Loop - Each loop shares a common Summer with one output	52427
3	2-L-3-148	Steam Generator 3 Motor Driven AFW Level - Pump B	Y/N	Flow loop - (YES) Like U1 for Main Control System (ACR & MCR) and (NO) for signals to Indicators (ACR & MCR) and Annunciator	52343
3	2-L-3-156	Steam Generator 2 Motor Driven AFW Level - Pump A	Y/N	Flow loop - (YES) Like U1 for Main Control System (ACR & MCR) and (NO) for signals to Indicators (ACR & MCR) and Annunciator	52343
3	2-L-3-164	Steam Generator 1 Motor Driven AFW Level - Pump A	Y/N	Flow loop - (YES) Like U1 for Main Control System (ACR & MCR) and (NO) for signals to Indicators (ACR & MCR) and Annunciator	52343
3	2-L-3-171	Steam Generator 4 Motor Driven AFW Level - Pump B	Y/N	Flow loop - (YES) Like U1 for Main Control System (ACR & MCR) and (NO) for signals to Indicators (ACR & MCR) and Annunciator	52343
3	2-L-3-172	Steam Generator 3 Turbine Driven AFW level (Train A)	Y/N	Flow loop - (YES) Like U1 for Main Control System (PNL 2-L-381A (Local) & MCR) and (NO) for signals to Indicators (ACR & MCR) and Annunciator	52343

Foxboro Analog Spec 200 Unit 1 to Unit 2 Loop Comparison
5/27/2010

System Number	Loop Number	Loop Function	Same as Unit 1 Y/N	Comments	Change Package No.
3	2-L-3-173	Steam Generator 2 Turbine Driven AFW level (Train B)	Y/N	Flow loop - (YES) Like U1 for Main Control System (PNL 2-L-381A (Local) & MCR) and (NO) for signals to Indicators (ACR & MCR) and Annunciator	52343
3	2-L-3-174	Steam Generator 1 Turbine Driven AFW level (Train B)	Y/N	Flow loop - (YES) Like U1 for Main Control System (PNL 2-L-381A (Local) & MCR) and (NO) for signals to Indicators (ACR & MCR) and Annunciator	52343
3	2-L-3-175	Steam Generator 4 Turbine Driven AFW level (Train A)	Y/N	Flow loop - (YES) Like U1 for Main Control System (PNL 2-L-381A (Local) & MCR) and (NO) for signals to Indicators (ACR & MCR) and Annunciator	52343
68	2-F-68-397-A	Reactor Vessel Head Vent Throttle Manual Loading Station (Train A)	N	Flow Loop	53765
68	2-F-68-396-B	Reactor Vessel Head Vent Throttle Manual Loading Station (Train B)	N	Flow Loop	53765

System Number	Loop Number	Loop Function	Same as Unit 1 Y/N	Comments	Change Package No.	Unit 1 Component	U1 Manufacturer/Model #	Unit 2 Component	U2 Manufacturer/Model #
46	2-F-46-57/ 2 F-3-142	Turbine Driven AFW Pump Control	Y	Flow control Loop	52343	1-FC-46-57A	Foxboro/N-2AX+AM	2-FC-46-57A	Foxboro/N-2AX+AM
						1-FC-46-57B	Foxboro/N-2AX+A4	2-FC-46-57B	Foxboro/N-2AX-M3+A4
						1-FIC-46-57A	Foxboro/N-2AX+M2NH	2-FIC-46-57A	Foxboro/N-2AX+M2NH
						1-FIC-46-57B	Foxboro/N-250HM-M2NH-F	2-FIC-46-57B	Foxboro/N-250HM-M2NH-F
						1-FM-46-57A	Foxboro/N-2AI-H2V	2-FM-46-57A	Foxboro/N-2AI-I2V
						1-FM-46-57B	Foxboro/N-2AO-V2H		
						1-FM-46-57D	Robertshaw/572-C2	2-FM-46-57D	Foxboro/N-2AO-VAI
						1-FS-46-57	APCS/PA101-29200	2-FS-46-57	Foxboro/N-2AO-L2C-R
						1-PX-46-57A	Foxboro/N-2AX-PS9A		
						1-XM-46-57	APCS/SI139-2176100	2-XM-46-57	Foxboro/N-2AO-VAI
						1-FM-3-142A	APCS/SE160-203310	2-FM-3-142A	Foxboro/N-2AP+SQE
						1-FM-3-142B	APCS/SI139-2176100	2-FM-3-142B	Foxboro/N-2AO-VAI
						1-FM-3-142C	APCS/SI139-2176100	2-FM-3-142C	Foxboro/N-2AO-VAI
								2-FS-46-57A	Foxboro/N-2AO-L2C-R
								2-FS-46-57B	Foxboro/N-2AO-L2C-R
								2-FS-46-57C	Foxboro/N-2AO-L2C-R
								2-FS-46-57D	Foxboro/N-2AO-L2C-R
								2-FS-46-57E	Foxboro/N-2AP+ALM-AR
								2-FS-46-57FA	Foxboro/N-2AI-C2L
								2-FS-46-57FB	Foxboro/N-2AI-C2L
								2-FX-46-57A	Foxboro/N-2AX+DS1 (N-ECEP-8629)
								2-FX-46-57B	Foxboro/N-2AX+DS1 (N-ECEP-8629)
								2-FX-46-57C	Foxboro/N-2AX+DS1 (N-ECEP-8629)
								2-XM-46-57	Foxboro/N-2AO-VAI
This loop controls the Turbine driven Auxiliary Feedwater Pump outlet flow (from 2-FT-3-142) by varying the speed of the Turbine driven Auxiliary Feedwater pump. Flow indicating controller 2-FIC-46-57A (on panel 2-M-4) can be used in either manual or automatic mode, this Main Control Room controller is used when transfer switch 2-XS-46-57 (in junction box JB-8017) is in the normal position. When transfer switch 2-XS-46-57 (in junction box JB-8017) or transfer switch 2-XS-46-57A (in junction box JB-2235) is in the auxiliary position the loop is transferred into automatic mode. While the loop is in the auxiliary mode local flow indicating controller 2-FIC-46-57B (on panel 2-L-381) is used, this controller can transfer the loop back into manual control for local operator control or it can be left in manual mode. When the turbine driven auxiliary feedwater pump outlet flow reaches its high setpoint a warning annunciation light is illuminated on panel 2-L-381 and the loop is transferred to automatic mode to prevent turbine over speed. Main Control Room hand switch 2-HS-46-57 is used as a "reset" to transfer this loop out of automatic mode after plant conditions have initiated a transfer it into automatic mode. This loop also provides input into the ICS. Flow indicator 2-FI-3-142A (on panel 2-M-4) provides main control room indication of the turbine driven auxiliary feedwater pump outlet flow. Flow indicator 2-FI-3-142C (on panel 2-L-10) provides auxiliary control room indication turbine driven auxiliary feedwater pump outlet flow. **This loop is functionally equivalent to Unit 1.**										
3	2-P-3-122A	Auxiliary Feedwater Pump 2A-A Differental Pressure	N	Pressure Loop	52427	1-PDIC-3-122A	GE/549	2-PDIC-3-122A	Foxboro/N-250HM-M2NH-F
						1-PDM-3-122A	GE/550	2-PDM-3-122A	Foxboro/N-2AO-VAI
						1-PM-3-122	Fisher/546		
								2-PDM-3-122AE	Foxboro/N-2AI-I2V
								2-PDC-3-122A	Foxboro/N-2AC+A4
								2-PDM-3-122AA	Foxboro/N-2AO-VAI
This loop controls the differential pressure of the Auxiliary Feedwater Pump 2A-A by varying valve 2-PCV-3-122. Differential Pressure Indicating Controller 2-PdIC-3-122A (on panel 2-M-4) can be used either in manual mode or in automatic mode. This loop controls this valve from the Main Control Room when transfer switch 2-XS-3-122 (on panel 2-L-11A) is in the normal position. **This loop is functionally equivalent to Unit 1.**									
3	2-P-3-122C	Auxiliary Feedwater Pump 2A-A Differental Pressure Aux Control	N	Pressure Loop	52343	1-PDIC-3-122C	GE/549	2-PDIC-3-122C	Foxboro/N-250HM-M2NH-F
						1-PM-3-122	Fisher/546		
								2-PDM-3-122CE	Foxboro/N-2AI-I2V
								2-PDC-3-122C	Foxboro/N-2AC+A4
								2-PDM-3-122CA	Foxboro/N-2AO-VAI
This loop controls the differential pressure of the Auxiliary Feedwater Pump 2A-A by varying valve 2-PCV-3-122. Differential Pressure Indicating Controller 2-PdIC-3-122C (on panel 2-L-10) can be used either in manual mode or in automatic mode. This loop controls this valve from the Auxiliary Control Room when transfer switch 2-XS-3-122 (on panel 2-L-11A) is in the auxiliary position. **This loop is functionally equivalent to Unit 1.**									
3	2-P-3-132A	Auxiliary Feedwater Pump 2B-B Differential Pressure	N	Pressure Loop	52427	1-PDIC-3-132A	GE/549	2-PDIC-3-132A	Foxboro/N-250HM-M2NH-F
						1-PDM-3-132A	GE/550	2-PDM-3-132A	Foxboro/N-2AO-VAI
						1-PM-3-132	Fisher/546		
								2-PDM-3-132AE	Foxboro/N-2AI-I2V
								2-PDC-3-132A	Foxboro/N-2AC+A4
								2-PDM-3-132AA	Foxboro/N-2AO-VAI
This loop controls the differential pressure of the Auxiliary Feedwater Pump 2B-B by varying valve 2-PCV-3-132. Differential Pressure Indicating Controller 2-PdIC-3-132A (on panel 2-M-4) can be used either in manual mode or in automatic mode. This loop controls this valve from the Main Control Room when transfer switch 2-XS-3-132 (on panel 2-L-11B) is in the normal position. **This loop is functionally equivalent to Unit 1.**									
3	2-P-3-132C	Auxiliary Feedwater Pump 2B-B Differental Pressure Aux Control	N	Pressure Loop	52343	1-PDIC-3-132C	GE/549	2-PDIC-3-132C	Foxboro/N-250HM-M2NH-F
						1-PM-3-132	Fisher/546		
								2-PDM-3-132CE	Foxboro/N-2AI-I2V
								2-PDC-3-132C	Foxboro/N-2AC+A4
								2-PDM-3-132CA	Foxboro/N-2AO-VAI
This loop controls the differential pressure of the Auxiliary Feedwater Pump 2B-B by varying valve 2-PCV-3-132. Differential Pressure Indicating Controller 2-PdIC-3-132C (on panel 2-L-10) can be used either in manual mode or in automatic mode. This loop controls this valve from the Auxiliary Control Room when transfer switch 2-XS-3-122 (on panel 2-L-11B) is in the auxiliary position. **This loop is functionally equivalent to Unit 1.**									
3	2-F-3-147A	Steam Generator 3 Auxiliary Feedwater Flow	N	Flow control Loop	52427	1-FM-3-147AA	Moore/SRT	2-FM-3-147AA	Foxboro/N-2AP+SQE
						1-FM-3-147AB	Robertshaw/572-C2	2-FM-3-147AB	Foxboro/N-2AO-VAI (N-ECEP-9206)
This loop provides Main Control Room indication of Steam Generator 3 Auxiliary Feedwater Flow. Flow indicator 2-FI-3-147A (on panel 2-M-3) is used as						1-FM-3-147AD	Moore/SCT	2-FM-3-147AD	Foxboro/N-2AO-VAI

		a PAM category 1 device. This loop also provides input into the ICS.				1-PX-3-147A	Robertshaw/513-A1		
						LOG PT Y0703A	N/A	LOG PT Y0703A	N/A
		This loop is functionally equivalent to Unit 1.						2-FM-3-147AE	Foxboro/N-2AI-I2V
3	2-F-3-147B	Steam Generator 3 Auxiliary Feedwater Flow	N	Flow control Loop	52343	1-FM-3-147BA	GE/550	2-FM-3-147BA	Foxboro/N-2AO-VAI
This loop provides Main Control Room indication of Steam Generator 3 Auxiliary Feedwater Flow, flow indicator 2-FI-3-147B (on panel 2-M-3) is used as a PAM category 2 device. Flow indicator, 2-FI-3-147C (on panel 2-L-10), provides Auxiliary Control Room indication of Steam Generator 3 Auxiliary Feedwater Flow. This loop provides local flow indication, 2-FI-3-147D (on panel 2-L-381), outside of the Turbine Driven Auxiliary Feedwater Pump Room.						1-FM-3-147BB	GE/565	2-FM-3-147BB	Foxboro/N-2AP+SQE
						1-FM-3-147D	E-Max Inst/175D 127-5	2-FM-3-147D	Foxboro/N-2AO-VAI
						1-PX-3-147B	GE/570-06		
		This loop is functionally equivalent to Unit 1.						2-FM-3-147BE	Foxboro/N-2AI-I2V
3	2-F-3-155A	Steam Generator 2 Auxiliary Feedwater Flow	N	Flow control Loop	52343	1-FM-3-155AA	GE/550	2-FM-3-155AA	Foxboro/N-2AO-VAI
This loop provides Main Control Room indication of Steam Generator 2 Auxiliary Feedwater Flow, flow indicator 2-FI-3-155A (on panel 2-M-3) is used as a PAM category 1 device. Flow indicator, 2-FI-3-155C (on panel 2-L-10), provides Auxiliary Control Room indication of Steam Generator 2 Auxiliary Feedwater Flow. This loop provides local flow indication, 2-FI-3-155D (on panel 2-L-381), outside of the Turbine Driven Auxiliary Feedwater Pump Room.						1-FM-3-155AB	GE/565	2-FM-3-155AB	Foxboro/N-2AP+SQE
						1-FM-3-155D	E-Max Inst/175D 127-5	2-FM-3-155D	Foxboro/N-2AO-VAI
						1-PX-3-155A	GE/570-06		
		This loop is functionally equivalent to Unit 1.						2-FM-3-155AE	Foxboro/N-2AI-I2V
3	2-F-3-155B	Steam Generator 2 Auxiliary Feedwater Flow	N	Flow control Loop	52427	1-FM-3-155BA	Moore/SRT	2-FM-3-155BA	Foxboro/N-2AP+SQE
This loop provides Main Control Room indication of Steam Generator 2 Auxiliary Feedwater Flow. Flow indicator 2-FI-3-155B (on panel 2-M-3) is used as a PAM category 2 device. This loop also provides input into the ICS.						1-FM-3-155BB	Robertshaw/572-C2	2-FM-3-155BB	Foxboro/N-2AO-VAI (N-ECEP-9206)
						1-FM-3-155BD	Moore/SCT	2-FM-3-155BD	Foxboro/N-2AO-VAI
						1-PX-3-155B	Robertshaw/513-A1		
						LOG PT Y0704A	N/A	LOG PT Y0704A	N/A
		This loop is functionally equivalent to Unit 1.						2-FM-3-155BE	Foxboro/N-2AI-I2V
3	2-F-3-163A	Steam Generator 1 Auxiliary Feedwater Flow	N	Flow control Loop	52427	1-FM-3-163AA	Moore/SRT	2-FM-3-163AA	Foxboro/N-2AP+SQE
This loop provides Main Control Room indication of Steam Generator 1 Auxiliary Feedwater Flow. Flow indicator 2-FI-3-163A (on panel 2-M-3) is used as a PAM category 1 device. This loop also provides input into the ICS.						1-FM-3-163AB	Robertshaw/572-C2	2-FM-3-163AB	Foxboro/N-2AO-VAI (N-ECEP-9206)
						1-FM-3-163AD	Moore/SCT	2-FM-3-163AD	Foxboro/N-2AO-VAI
						1-PX-3-163A	Robertshaw/513-A1		
						LOG PT Y0708A	N/A	LOG PT Y0708A	N/A
		This loop is functionally equivalent to Unit 1.						2-FM-3-163AE	Foxboro/N-2AI-I2V
3	2-F-3-163B	Steam Generator 1 Auxiliary Feedwater Flow	N	Flow control Loop	52343	1-FM-3-163BA	GE/550	2-FM-3-163BA	Foxboro/N-2AO-VAI
This loop provides Main Control Room indication of Steam Generator 1 Auxiliary Feedwater Flow, flow indicator 2-FI-3-163B (on panel 2-M-3) is used as a PAM category 2 device. Flow indicator, 2-FI-3-163C (on panel 2-L-10) provides Auxiliary Control Room indication of Steam Generator 1 Auxiliary Feedwater Flow. This loop provides local indication, 2-FI-3-163D (on panel 2-L-381), outside of the Turbine Driven Auxiliary Feedwater Pump Room.						1-FM-3-163BB	GE/565	2-FM-3-163BB	Foxboro/N-2AP+SQE
						1-FM-3-163D	E-Max Inst/175D 127-5	2-FM-3-163D	Foxboro/N-2AO-VAI
						1-PX-3-163B	GE/570-06		
		This loop is functionally equivalent to Unit 1.						2-FM-3-163BE	Foxboro/N-2AI-I2V
3	2-F-3-170A	Steam Generator 4 Auxiliary Feedwater Flow	N	Flow control Loop	52343	1-FM-3-170AA	GE/550	2-FM-3-170AA	Foxboro/N-2AO-VAI
This loop provides Main Control Room indication of Steam Generator 4 Auxiliary Feedwater Flow, flow indicator 2-FI-3-170A (on panel 2-M-3) is used as a PAM category 1 device. Flow indicator, 2-FI-3-170C (on panel 2-L-10) provides Auxiliary Control Room indication of Steam Generator 4 Auxiliary Feedwater Flow. This loop provides local indication, 2-FI-3-170D (on panel 2-L-381), outside of the Turbine Driven Auxiliary Feedwater Pump Room.						1-FM-3-170AB	GE/565	2-FM-3-170AB	Foxboro/N-2AP+SQE
						1-FM-3-170D	E-Max Inst/175D 127-5	2-FM-3-170D	Foxboro/N-2AO-VAI
						1-PX-3-170A	GE/570-06		
		This loop is functionally equivalent to Unit 1.						2-FM-3-170AE	Foxboro/N-2AI-I2V
3	2-F-3-170B	Steam Generator 4 Auxiliary Feedwater Flow	N	Flow control Loop	52427	1-FM-3-170BA	Moore/SRT	2-FM-3-170BA	Foxboro/N-2AP+SQE
This loop provides Main Control Room indication of Steam Generator 4 Auxiliary Feedwater Flow, flow indicator 2-FI-3-170B (on panel 2-M-3) is used as a PAM category 2 device. This loop also provides input into the ICS.						1-FM-3-170BB	Robertshaw/572-C2	2-FM-3-170BB	Foxboro/N-2AO-VAI (N-ECEP-9206)
						1-FM-3-170BD	Moore/SCT	2-FM-3-170BD	Foxboro/N-2AO-VAI
						1-PX-3-170B	Robertshaw/513-A1		
						LOG PT Y0709A	N/A	LOG PT Y0709A	N/A
		This loop is functionally equivalent to Unit 1.						2-FM-3-170BE	Foxboro/N-2AI-I2V
30	2-P-30-310	Containment Pressure (Train A)	N	Pressure Loop	52427	1-PM-30-310	APCS/SI139-2166100	2-PM-30-310	Foxboro/N-2AO-VAI (N-ECEP-9206)
This loop provides Main Control Room indication of Containment Pressure, pressure indicator 2-PI-3-310 (on panel 2-M-9) is used as a PAM category 1 device. This loop also provides input into the ICS.						1-PX-30-310	APCS/PS108-202000		
						LOG PT P1121A	N/A	LOG PT P1121A	N/A
								2-PM-30-310A	Foxboro/N-2AO-VAI
		This loop is functionally equivalent to Unit 1.						2-PM-30-310E	Foxboro/N-2AI-I2V
30	2-P-30-311	Containment Pressure (Train B)	N	Pressure Loop	52427	1-PM-30-311	APCS/SI139-2166100	2-PM-30-311	Foxboro/N-2AO-VAI (N-ECEP-9206)
This loop provides Main Control Room indication of Containment Pressure, pressure indicator 2-PI-3-311 (on panel 2-M-9) is used as a PAM category 2 device. This loop also provides input into the ICS.						1-PX-30-311	APCS/PS108-202000		
						LOG PT P1122A	N/A	LOG PT P1122A	N/A
								2-PM-30-311A	Foxboro/N-2AO-VAI
		This loop is functionally equivalent to Unit 1.						2-PM-30-311E	Foxboro/N-2AI-I2V
30	2-T-30-1032	Lower Containment Ambient Temperature (Train A)	N	Temperature Loop	52427	1-TM-30-1032	Moore/RBT	2-TM-30-1032	Foxboro/N-2AI-P2V (N-ECEP-9808)
This loop provides two Main Control Room indications of Containment Ambient temperature, temperature indicator 2-TI-3-1032A (on panel 2-M-6) is used as a PAM category 1 device, and temperature indicator 2-TI-3-1034A (on panel 2-M-9) is used as a PAM category 1 device.								2-TM-30-1032E	Foxboro/N-2AO-VAI

		This loop is functionally equivalent to Unit 1.						*2-TM-30-1032D*	*Foxboro/N-2AO-VAI*
30	2-T-30-1033	Lower Containment Ambient Temperature (Train B)	N	Temperature Loop	52427	1-TM-30-1033	Moore/RBT	2-TM-30-1033	Foxboro/N-2AI-P2V (N-ECEP-9808)
This loop provides two Main Control Room indications of Containment Ambient temperature, temperature indicator 2-TI-3-1033A (on panel 2-M-6) is used as a PAM category 2 device, and temperature indicator 2-TI-3-1035A (on panel 2-M-9) is used as a PAM category 2 device.								2-TM-30-1033E	Foxboro/N-2AO-VAI
This loop is functionally equivalent to Unit 1.								2-TM-30-1033D	Foxboro/N-2AO-VAI
30	2-T-30-1034	Lower Containment Ambient Temperature (Train A)	N	Temperature Loop	52427	1-TM-30-1034A	Moore/RBT	2-TM-30-1034A	Foxboro/N-2AI-P2V (N-ECEP-9808)
This loop provides two Main Control Room indications of Containment Ambient temperature, temperature indicator 2-TI-3-1032B (on panel 2-M-6) is used as a PAM category 1 device, and temperature indicator 2-TI-3-1034B (on panel 2-M-9) is used as a PAM category 1 device. This loop also provides input into the ICS.						1-TM-30-1034B	Moore/SCX	2-TM-30-1034B	Foxboro/N-2AO-VAI (N-ECEP-9206)
						LOG PT T4009A	N/A	LOG PT T4009A	N/A
								2-TM-30-1034E	Foxboro/N-2AO-VAI
This loop is functionally equivalent to Unit 1.								2-TM-30-1034D	Foxboro/N-2AO-VAI
30	2-T-30-1035	Lower Containment Ambient Temperature (Train B)	N	Temperature Loop	52427	1-TM-30-1035A	Moore/RBT	2-TM-30-1035A	Foxboro/N-2AI-P2V (N-ECEP-9808)
This loop provides two Main Control Room indications of Containment Ambient temperature, temperature indicator 2-TI-3-1033B (on panel 2-M-6) is used as a PAM category 2 device, and temperature indicator 2-TI-3-1035B (on panel 2-M-9) is used as a PAM category 2 device. This loop also provides input into the ICS.						1-TM-30-1035B	Moore/SCX	2-TM-30-1035B	Foxboro/N-2AO-VAI (N-ECEP-9206)
						LOG PT T4010A	N/A	LOG PT T4010A	N/A
								2-TM-30-1035E	Foxboro/N-2AO-VAI
This loop is functionally equivalent to Unit 1.								2-TM-30-1035D	Foxboro/N-2AO-VAI
70	2-F-70-165A	RHR Heat Exchanger 2B-B Supply Header Flow	N	Flow Loop	52427	1-FM-70-165A	GE/565	2-FM-70-165A	Foxboro/N-2AP+SQE
This loop provides Main Control Room indication of RHR Heat Exchanger 2B-B Supply Header Flow on flow indicator 2-FI-70-165A (on panel 0-M-27B).						1-FM-70-165B	Robertshaw/572-C2	2-FM-70-165B	Foxboro/N-2AO-VAI
						1-FS-70-165A	GE/560		
						1-PX-70-165A	GE/570-06		
This loop is functionally equivalent to Unit 1.								2-FM-70-165AE	Foxboro/N-2AI-I2V
70	2-F-70-215A & -215B	Sample Heat Exchanger Header Differential Flow -	N	Flow Loop - Each loop shares a common Summer with one output	52427	1-FDS-70-215	Robertshaw/553-C2-B2-B1	2-FDS-70-215	Foxboro/N-2AO-L2C-R
This loop controls the flow through the Sample Heat Exchanger by varying valve 2-FCV-70-183.						1-FM-70-215A	Robertshaw/570-C2	2-FM-70-215A	Foxboro/N-2AP+SQE
						1-FM-70-215B	Robertshaw/570-C2	2-FM-70-215B	Foxboro/N-2AP+SQE
						1-FM-70-215D	Moore/ASM/2X10-50MA/Z10-50MA/117VAC/-KO[AB]	2-FM-70-215D	Foxboro/N-2AP+SUM
								2-FM-70-215AE	Foxboro/N-2AI-I2V
								2-FM-70-215BE	Foxboro/N-2AI-I2V
This loop is functionally equivalent to Unit 1.								2-FDS-70-215A	Foxboro/N-2AP+ALM-AR
3	2-L-3-148	Steam Generator 3 Motor Driven AFW Level - Pump B	Y/N	Flow loop - (YES) Like U1 for Main Control System (ACR & MCR) and (NO) for signals to Indicators (ACR & MCR) and Annunciator	52343	1-LC-3-148A	Foxboro/N-2AX+AM	2-LC-3-148A	Foxboro/N-2AX+AM
This loop controls Steam Generator 3 level by varying valves 2-LCV-3-148 and 2-LCV-3-148A which control the amount of water input from Auxiliary Feedwater Pump 2B-B. This loop is controlled from the main control room by level indicating controller 2-LIC-3-148A (on panel 2-M-4) when transfer switch 2-XS-3-148A (on panel 2-L-11B) is in the normal position. This controller can be used in either automatic or manual mode. Level indicator 2-LI-3-148 (on panel 2-M-3) provides main control room indication. When transfer switch 2-XS-3-148A is transferred to the auxiliary position the loop is put into automatic mode and control is transferred to the auxiliary control room level indicating controller 2-LIC-3-148B (on panel 2-L-11B). This controller can be put into manual mode or left in automatic. Level indicator 2-LI-3-148C (on panel 2-L-10) provides auxiliary control room indication. Transfer switch 2-XS-3-148 (on panel 2-L-11B) transfers this loop from manual to automatic control. This loop provides main control room annunciation when steam generator 3 level is high (window box 3C, window 62B), and when transfer switch 2-XS-3-148A is in the auxiliary position (widow box 6F, window 148C).						1-LC-3-148B	Foxboro/N-2AX+A4	2-LC-3-148B	Foxboro/N-2AC-M3+A4
						1-LIC-3-148A	Foxboro/N-2AX+M2NH	2-LIC-3-148A	Foxboro/N-2AX+M2NH
						1-LIC-3-148B	Foxboro/N-250HM-M2NH-F	2-LIC-3-148B	Foxboro/N-250HM-M2NH-F
						1-LM-3-148	GE/550	2-LM-3-148	Foxboro/N-2AO-VAI
						1-LM-3-148A	Masoneilan/8005N		
						1-LM-3-148B	Robertshaw/572-C2	2-LM-3-148B	Foxboro/N-2AO-VAI
						1-LM-3-148C	Foxboro/N-2AO-V2H	2-LM-3-148C	Foxboro/N-2AO-VAI
						1-LM-3-148D	Foxboro/N-2AI-H2V	2-LM-3-148D	Foxboro/N-2AI-I2V
						1-LS-3-148B/D	GE/560	2-LS-3-148B/D	Foxboro/N-2AO-L2C-R
						1-LS-3-148D/B (SPARE)	GE/560		
						1-PX-3-148	GE/570		
						1-PX-3-148A	Foxboro/N-2AX-PS9A		
								2-LM-3-148E	Foxboro/N-2AI-I2V
								2-LS-3-148A	Foxboro/N-2AP+ALM-AR
								2-LS-3-148EB	Foxboro/N-2AI-C2L
								2-LS-3-148EA	Foxboro/N-2AI-C2L
								2-LS-3-148F	Foxboro/N-2AO-L2C-R
This loop is functionally equivalent to Unit 1.								2-LX-3-148ABC	Foxboro/N-2AX+DS1 (N-ECEP-8629)
3	2-L-3-156	Steam Generator 2 Motor Driven AFW Level - Pump A	Y/N	Flow loop - (YES) Like U1 for Main Control System (ACR & MCR) and (NO) for signals to Indicators (ACR & MCR) and Annunciator	52343	1-LC-3-156A	Foxboro/N-2AX+AM	2-LC-3-156A	Foxboro/N-2AX+AM
						1-LC-3-156B	Foxboro/N-2AX+A4	2-LC-3-156B	Foxboro/N-2AC-M3+A4
						1-LIC-3-156A	Foxboro/N-2AX+M2NH	2-LIC-3-156A	Foxboro/N-2AX+M2NH

This loop controls Steam Generator 2 level by varying valves 2-LCV-3-156 and 2-LCV-3-156A which control the amount of water input from Auxiliary Feedwater Pump 2A-A. This loop is controlled from the main control room by level indicating controller 2-LIC-3-156A (on panel 2-M-4) when transfer switch 2-XS-3-156A (on panel 2-L-11A) is in the normal position. This controller can be used in either automatic or manual mode. Level indicator 2-LI-3-156 (on panel 2-M-3) provides main control room indication. When transfer switch 2-XS-3-156A is transferred to the auxiliary position the loop is put into automatic mode and control is transferred to the auxiliary control room level indicating controller 2-LIC-3-156B (on panel 2-L-11A). This controller can be put into manual mode or left in automatic. Level indicator 2-LI-3-156C (on panel 2-L-10) provides auxiliary control room indication. Transfer switch 2-XS-3-156 (on panel 2-L-11A) transfers this loop from manual to automatic control. This loop provides main control room annunciation when steam generator 2 level is high (window box 3C, window 61B), when transfer switch 2-XS-3-156A is in the auxiliary position (widow box 6F, window 148B), and when there is a power failure in panel 2-L-11A (window box 6F, window 146D). **This loop is functionally equivalent to Unit 1.**						1-LIC-3-156B	Foxboro/N-250HM-M2NH-F	2-LIC-3-156B	Foxboro/N-250HM-M2NH-F
						1-LM-3-156	GE/550	2-LM-3-156	Foxboro/N-2AO-VAI
						1-LM-3-156A	Masoneilan/8005A		
						1-LM-3-156B	Robertshaw/572-C2	2-LM-3-156B	Foxboro/N-2AO-VAI
						1-LM-3-156C	Foxboro/N-2AO-V2H	2-LM-3-156C	Foxboro/N-2AO-VAI
						1-LM-3-156D	Foxboro/N-2AI-H2V	2-LM-3-156D	Foxboro/N-2AI-I2V
						1-LS-3-156B/D	GE/560	2-LS-3-156B/D	Foxboro/N-2AO-L2C-R
						1-LS-3-156D/B (SPARE)	GE/560		
						1-PX-3-156	GE/570		
								2-LM-3-156E	Foxboro/N-2AI-I2V
								2-LS-3-156A	Foxboro/N-2AP+ALM-AR
								2-LS-3-156EB	Foxboro/N-2AI-C2L
								2-LS-3-156EA	Foxboro/N-2AI-C2L
								2-LS-3-156F	Foxboro/N-2AO-L2C-R
								2-LX-3-156ABC	Foxboro/N-2AX+DS1 (N-ECEP-8629)
3	2-L-3-164	Steam Generator 1 Motor Driven AFW Level - Pump A	Y/N	Flow loop - (YES) Like U1 for Main Control System (ACR & MCR) and (NO) for signals to Indicators (ACR & MCR) and Annunciator	52343	1-LC-3-164A	Foxboro/N-2AX+AM	2-LC-3-164A	Foxboro/N-2AX+AM
This loop controls Steam Generator 1 level by varying valves 2-LCV-3-164 and 2-LCV-3-164A which control the amount of water input from Auxiliary Feedwater Pump 2A-A. This loop is controlled from the main control room by level indicating controller 2-LIC-3-164A (on panel 2-M-4) when transfer switch 2-XS-3-164A (on panel 2-L-11A) is in the normal position. This controller can be used in either automatic or manual mode. Level indicator 2-LI-3-164 (on panel 2-M-3) provides main control room indication. When transfer switch 2-XS-3-164A is transferred to the auxiliary position the loop is put into automatic mode and control is transferred to the auxiliary control room level indicating controller 2-LIC-3-164B (on panel 2-L-11A). This controller can be put into manual mode or left in automatic. Level indicator 2-LI-3-164C (on panel 2-L-10) provides auxiliary control room indication. Transfer switch 2-XS-3-164 (on panel 2-L-11A) transfers this loop from manual to automatic control. This loop provides main control room annunciation when steam generator 1 level is high (window box 3C, window 60B), and when transfer switch 2-XS-3-164A is in the auxiliary position (widow box 6F, window 148B). **This loop is functionally equivalent to Unit 1.**						1-LC-3-164B	Foxboro/N-2AX+A4	2-LC-3-164B	Foxboro/N-2AC-M3+A4
						1-LIC-3-164A	Foxboro/N-2AX+M2NH	2-LIC-3-164A	Foxboro/N-2AX+M2NH
						1-LIC-3-164B	Foxboro/N-250HM-M2NH-F	2-LIC-3-164B	Foxboro/N-250HM-M2NH-F
						1-LM-3-164	GE/550	2-LM-3-164	Foxboro/N-2AO-VAI
						1-LM-3-164A	Masoneilan/8005A		
						1-LM-3-164B	Robertshaw/572-C2	2-LM-3-164B	Foxboro/N-2AO-VAI
						1-LM-3-164C	Foxboro/N-2AO-V2H	2-LM-3-164C	Foxboro/N-2AO-VAI
						1-LM-3-164D	Foxboro/N-2AI-H2V	2-LM-3-164D	Foxboro/N-2AI-I2V
						1-LS-3-164B/D	GE/560	2-LS-3-164B/D	Foxboro/N-2AO-L2C-R
						1-LS-3-164D/B (SPARE)	GE/560		
						1-PX-3-164	GE/570		
						1-PX-3-164A	Foxboro/N-2AX-PS9A		
								2-LM-3-164E	Foxboro/N-2AI-I2V
								2-LS-3-164A	Foxboro/N-2AP+ALM-AR
								2-LS-3-164EB	Foxboro/N-2AI-C2L
								2-LS-3-164EA	Foxboro/N-2AI-C2L
								2-LS-3-164F	Foxboro/N-2AO-L2C-R
								2-LX-3-164ABC	Foxboro/N-2AX+DS1 (N-ECEP-8629)
3	2-L-3-171	Steam Generator 4 Motor Driven AFW Level - Pump B	Y/N	Flow loop - (YES) Like U1 for Main Control System (ACR & MCR) and (NO) for signals to Indicators (ACR & MCR) and Annunciator	52343	1-LC-3-171A	Foxboro/N-2AX+AM	2-LC-3-171A	Foxboro/N-2AX+AM
This loop controls Steam Generator 4 level by varying valves 2-LCV-3-171 and 2-LCV-3-171A which control the amount of water input from Auxiliary Feedwater Pump 2B-B. This loop is controlled from the main control room by level indicating controller 2-LIC-3-171A (on panel 2-M-4) when transfer switch 2-XS-3-171A (on panel 2-L-11B) is in the normal position. This controller can be used in either automatic or manual mode. Level indicator 2-LI-3-171 (on panel 2-M-3) provides main control room indication. When transfer switch 2-XS-3-171A is transferred to the auxiliary position the loop is put into automatic mode and control is transferred to the auxiliary control room level indicating controller 2-LIC-3-171B (on panel 2-L-11B). This controller can be put into manual mode or left in automatic. Level indicator 2-LI-3-171C (on panel 2-L-10) provides auxiliary control room indication. Transfer switch 2-XS-3-171 (on panel 2-L-11B) transfers this loop from manual to automatic control. This loop provides main control room annunciation when steam generator 4 level is high (window box 3C, window 63B), when transfer switch 2-XS-3-171A is in the auxiliary position (widow box 6F, window *148C), and when there is a power failure in panel 2-L-11B (window box 6F, window 146D).* **This loop is functionally equivalent to Unit 1.**						1-LC-3-171B	Foxboro/N-2AX+A4	2-LC-3-171B	Foxboro/N-2AC-M3+A4
						1-LIC-3-171A	Foxboro/N-2AX+M2NH	2-LIC-3-171A	Foxboro/N-2AX+M2NH
						1-LIC-3-171B	Foxboro/N-250HM-M2NH-F	2-LIC-3-171B	Foxboro/N-250HM-M2NH-F
						1-LM-3-171	GE/550	2-LM-3-171	Foxboro/N-2AO-VAI
						1-LM-3-171A	Masoneilan/8005A		
						1-LM-3-171B	Robertshaw/572-C2	2-LM-3-171B	Foxboro/N-2AO-VAI
						1-LM-3-171C	Foxboro/N-2AO-V2H	2-LM-3-171C	Foxboro/N-2AO-VAI
						1-LM-3-171D	Foxboro/N-2AI-H2V	2-LM-3-171D	Foxboro/N-2AI-I2V
						1-LS-3-171B/D	GE/560	2-LS-3-171B/D	Foxboro/N-2AO-L2C-R
						1-LS-3-171D/B (SPARE)	GE/560		
						1-PX-3-171	GE/570		
								2-LM-3-171E	Foxboro/N-2AI-I2V
								2-LS-3-171A	Foxboro/N-2AP+ALM-AR
								2-LS-3-171EB	Foxboro/N-2AI-C2L
								2-LS-3-171EA	Foxboro/N-2AI-C2L
								2-LS-3-171F	Foxboro/N-2AO-L2C-R
								2-LX-3-171ABC	Foxboro/N-2AX+DS1 (N-ECEP-8629)

3	2-L-3-172	Steam Generator 3 Turbine Driven AFW level (Train A)	Y/N	Flow loop - (YES) Like U1 for Main Control System (PNL 2-L-381A (Local) & MCR) and (NO) for signals to Indicators (ACR & MCR) and Annunciator	52343	1-LC-3-172A	Foxboro/N-2AX+AM	2-LC-3-172A	Foxboro/N-2AX+AM
This loop controls Steam Generator 3 level by varying valve 2-LCV-3-172 which controls the amount of water input from the Turbine Driven Auxiliary Feedwater Pump. This loop is controlled from the main control room by level indicating controller 2-LIC-3-172A (on panel 2-M-4) when transfer switch 2-XS-3-172A (on panel 2-L-11A) is in the normal position. This controller can be used in either automatic or manual mode. Level indicator 2-LI-3-172 (on panel 2-M-3) provides main control room indication. When transfer switch 2-XS-3-172A is transferred to the auxiliary position the loop is put into automatic mode and control is transferred to level indicating controller 2-LIC-3-172B (on panel 2-L-381) located on a local panel outside of the turbine driven auxiliary feedwater pump room. This controller can be put into manual mode or left in automatic. Transfer switch 2-XS-3-172 (on panel 2-L-11A) transfers this loop from manual to automatic control. This loop provides input into the AMSAC system. This loop provides main control room annunciation when steam generator 3 level is high (window box 3C, window 62B), when transfer switch 2-XS-3-172A is in the auxiliary position (widow box 6F, window 148B), and when there is a power failure in panel 2-L-381A compartment A (window box 6F, window 147D).						1-LC-3-172B	Foxboro/N-2AX+A4	2-LC-3-172B	Foxboro/N-2AC-M3+A4
						1-LIC-3-172A	Foxboro/N-2AX+M2NH	2-LIC-3-172A	Foxboro/N-2AX+M2NH
						1-LIC-3-172B	Foxboro/N-250HM-M2NH-F	2-LIC-3-172B	Foxboro/N-250HM-M2NH-F
						1-LM-3-172	APCS/SI139-2176100	2-LM-3-172	Foxboro/N-2AO-VAI
						1-LM-3-172A	Masoneilan/8005N		
						1-LM-3-172C	Foxboro/N-2AO-V2H	2-LM-3-172C	Foxboro/N-2AO-VAI
						1-LM-3-172D	Foxboro/N-2AI-H2V	2-LM-3-172D	Foxboro/N-2AI-I2V
						1-LS-3-172B/D	GE/560	2-LS-3-172B/D	Foxboro/N-2AO-L2C-R
						1-LS-3-172D/B (SPARE)	GE/560		
						1-LS-3-172E	Moore/DCA/10-50MA/SL2/ 117VAC/-AD,-RE,-RF,-[AB]	2-LM-3-172E	Foxboro/N-2AI-I2V
						1-PX-3-172	GE/570		
						1-PX-3-172A	Foxboro/N-2AX-PS9A		
								2-LS-3-172A	Foxboro/N-2AP+ALM-AR
								2-LS-3-172EB	Foxboro/N-2AI-C2L
								2-LS-3-172EA	Foxboro/N-2AI-C2L
This loop is functionally equivalent to Unit 1.								2-LS-3-172F	Foxboro/N-2AO-L2C-R
								2-LX-3-172ABC	Foxboro/N-2AX+DS1 (N-ECEP-8629)
3	2-L-3-173	Steam Generator 2 Turbine Driven AFW level (Train B)	Y/N	Flow loop - (YES) Like U1 for Main Control System (PNL 2-L-381A (Local) & MCR) and (NO) for signals to Indicators (ACR & MCR) and Annunciator	52343	1-LC-3-173A	Foxboro/N-2AX+AM	2-LC-3-173A	Foxboro/N-2AX+AM
This loop controls Steam Generator 2 level by varying valve 2-LCV-3-173 which controls the amount of water input from the Turbine Driven Auxiliary Feedwater Pump. This loop is controlled from the main control room by level indicating controller 2-LIC-3-173A (on panel 2-M-4) when transfer switch 2-XS-3-173A (on panel 2-L-11B) is in the normal position. This controller can be used in either automatic or manual mode. Level indicator 2-LI-3-173 (on panel 2-M-3) provides main control room indication. When transfer switch 2-XS-3-173A is transferred to the auxiliary position the loop is put into automatic mode and control is transferred to level indicating controller 2-LIC-3-173B (on panel 2-L-381) located on a local panel outside of the turbine driven auxiliary feedwater pump room. This controller can be put into manual mode or left in automatic. Transfer switch 2-XS-3-173 (on panel 2-L-11B) transfers this loop from manual to automatic control. This loop provides input into the AMSAC system. This loop provides main control room annunciation when steam generator 2 level is high (window box 3C, window 61B), when transfer switch 2-XS-3-173A is in the auxiliary position (widow box 6F, window 148C).						1-LC-3-173B	Foxboro/N-2AX+A4	2-LC-3-173B	Foxboro/N-2AC-M3+A4
						1-LIC-3-173A	Foxboro/N-2AX+M2NH	2-LIC-3-173A	Foxboro/N-2AX+M2NH
						1-LIC-3-173B	Foxboro/N-250HM-M2NH-F	2-LIC-3-173B	Foxboro/N-250HM-M2NH-F
						1-LM-3-173	APCS/SI139-2176100	2-LM-3-173	Foxboro/N-2AO-VAI
						1-LM-3-173A	Masoneilan/8005N		
						1-LM-3-173C	Foxboro/N-2AO-V2H	2-LM-3-173C	Foxboro/N-2AO-VAI
						1-LM-3-173D	Foxboro/N-2AI-H2V	2-LM-3-173D	Foxboro/N-2AI-I2V
						1-LS-3-173B/D	GE/560	2-LS-3-173B/D	Foxboro/N-2AO-L2C-R
						1-LS-3-173D/B (SPARE)	GE/560		
						1-LS-3-173E	Moore/DCA/10-50MA/SL2/ 117VAC/-AD,-RE,-RF,-[AB]	2-LM-3-173E	Foxboro/N-2AI-I2V
						1-PX-3-173	GE/570		
								2-LS-3-173A	Foxboro/N-2AP+ALM-AR
								2-LS-3-173EB	Foxboro/N-2AI-C2L
								2-LS-3-173EA	Foxboro/N-2AI-C2L
This loop is functionally equivalent to Unit 1.								2-LS-3-173F	Foxboro/N-2AO-L2C-R
								2-LX-3-173ABC	Foxboro/N-2AX+DS1 (N-ECEP-8629)
3	2-L-3-174	Steam Generator 1 Turbine Driven AFW level (Train B)	Y/N	Flow loop - (YES) Like U1 for Main Control System (PNL 2-L-381A (Local) & MCR) and (NO) for signals to Indicators (ACR & MCR) and Annunciator	52343	1-LC-3-174A	Foxboro/N-2AX+AM	2-LC-3-174A	Foxboro/N-2AX+AM
This loop controls Steam Generator 1 level by varying valve 2-LCV-3-174 which controls the amount of water input from the Turbine Driven Auxiliary Feedwater Pump. This loop is controlled from the main control room by level indicating controller 2-LIC-3-174A (on panel 2-M-4) when transfer switch 2-XS-3-174A (on panel 2-L-11B) is in the normal position. This controller can be used in either automatic or manual mode. Level indicator 2-LI-3-174 (on panel 2-M-3) provides main control room indication. When transfer switch 2-XS-3-174A is transferred to the auxiliary position the loop is put into automatic mode and control is transferred to level indicating controller 2-LIC-3-174B (on panel 2-L-381) located on a local panel outside of the turbine driven auxiliary feedwater pump room. This controller can be put into manual mode or left in automatic. Transfer switch 2-XS-3-174 (on panel 2-L-11B) transfers this loop from manual to automatic control. This loop provides input into the AMSAC system. This loop provides main control room annunciation when steam generator 1 level is high (window box 3C, window 60B), when transfer switch 2-XS-3-174A is in the auxiliary position (widow box 6F, window 148C), and when there is a power failure in panel 2-L-381A compartment B (window box 6F, window 147D).						1-LC-3-174B	Foxboro/N-2AX+A4	2-LC-3-174B	Foxboro/N-2AC-M3+A4
						1-LIC-3-174A	Foxboro/N-2AX+M2NH	2-LIC-3-174A	Foxboro/N-2AX+M2NH
						1-LIC-3-174B	Foxboro/N-250HM-M2NH-F	2-LIC-3-174B	Foxboro/N-250HM-M2NH-F
						1-LM-3-174	APCS/SI139-2176100	2-LM-3-174	Foxboro/N-2AO-VAI
						1-LM-3-174A	Masoneilan/8005N		
						1-LM-3-174C	Foxboro/N-2AO-V2H	2-LM-3-174C	Foxboro/N-2AO-VAI
						1-LM-3-174D	Foxboro/N-2AI-H2V	2-LM-3-174D	Foxboro/N-2AI-I2V
						1-LS-3-174B/D	GE/560	2-LS-3-174B/D	Foxboro/N-2AO-L2C-R
						1-LS-3-174D/B (SPARE)	GE/560		
						1-LS-3-174E	Moore/DCA/10-50MA/SL2/ 117VAC/-AD,-RE,-RF,-[AB]	2-LM-3-174E	Foxboro/N-2AI-I2V
						1-PX-3-174	GE/570		

box 6F, window 148C), and when there is a power failure in panel 2-L-381A compartment B (window box 6F, window 147D).						1-PX-3-174A	Foxboro/N-2AX-PS9A		
								2-LS-3-174A	Foxboro/N-2AP+ALM-AR
								2-LS-3-174EB	Foxboro/N-2AI-C2L
								2-LS-3-174EA	Foxboro/N-2AI-C2L
This loop is functionally equivalent to Unit 1.								2-LS-3-174F	Foxboro/N-2AO-L2C-R
								2-LX-3-174ABC	Foxboro/N-2AX+DS1 (N-ECEP-8629)
3	2-L-3-175	Steam Generator 4 Turbine Driven AFW level (Train A)	Y/N	Flow loop - (YES) Like U1 for Main Control System (PNL 2-L-381A (Local) & MCR) and (NO) for signals to Indicators (ACR & MCR) and Annunciator	52343	1-LC-3-175A	Foxboro/N-2AX+AM	2-LC-3-175A	Foxboro/N-2AX+AM
						1-LC-3-175B	Foxboro/N-2AX+A4	2-LC-3-175B	Foxboro/N-2AC-M3+A4
						1-LIC-3-175A	Foxboro/N-2AX+M2NH	2-LIC-3-175A	Foxboro/N-2AX+M2NH
						1-LIC-3-175B	Foxboro/N-250HM-M2NH-F	2-LIC-3-175B	Foxboro/N-250HM-M2NH-F
						1-LM-3-175	APCS/SI139-2176100	2-LM-3-175	Foxboro/N-2AO-VAI
This loop controls Steam Generator 4 level by varying valve 2-LCV-3-175 which controls the amount of water input from the Turbine Driven Auxiliary Feedwater Pump. This loop is controlled from the main control room by level indicating controller 2-LIC-3-175A (on panel 2-M-4) when transfer switch 2-XS-3-175A (on panel 2-L-11A) is in the normal position. This controller can be used in either automatic or manual mode. Level indicator 2-LI-3-175 (on panel 2-M-3) provides main control room indication. When transfer switch 2-XS-3-175A is transferred to the auxiliary position the loop is put into automatic mode and control is transferred to level indicating controller 2-LIC-3-175B (on panel 2-L-381) located on a local panel outside of the turbine driven auxiliary feedwater pump room. This controller can be put into manual mode or left in automatic. Transfer switch 2-XS-3-175 (on panel 2-L-11A) transfers this loop from manual to automatic control. This loop provides input into the AMSAC system. This loop provides main control room annunciation when steam generator 4 level is high (window box 3C, window 63B), when transfer switch 2-XS-3-175A is in the auxiliary position (widow box 6F, window 148B).						1-LM-3-175A	Masoneilan/8005N		
						1-LM-3-175C	Foxboro/N-2AO-V2H	2-LM-3-175C	Foxboro/N-2AO-VAI
						1-LM-3-175D	Foxboro/N-2AI-H2V	2-LM-3-175D	Foxboro/N-2AI-I2V
						1-LS-3-175B/D	GE/560	2-LS-3-175B/D	Foxboro/N-2AO-L2C-R
						1-LS-3-175D/B (SPARE)	GE/560		
						1-LS-3-175E	Moore/DCA/10-50MA/SL2/ 117VAC/-AD,-RE,-RF,-[AB]	2-LM-3-175E	Foxboro/N-2AI-I2V
						1-PX-3-175	GE/570		
								2-LS-3-175A	Foxboro/N-2AP+ALM-AR
								2-LS-3-175EB	Foxboro/N-2AI-C2L
								2-LS-3-175EA	Foxboro/N-2AI-C2L
This loop is functionally equivalent to Unit 1.								2-LS-3-175F	Foxboro/N-2AO-L2C-R
								2-LX-3-175ABC	Foxboro/N-2AX+DS1 (N-ECEP-8629)
68	2-F-68-397-A	Reactor Vessel Head Vent Throttle Manual Loading Station (Train A)	N	Flow Loop	53756	1-HIC-68-397	Westinghouse/75HC3000 208-101 2212	2-HIC-68-397	Foxboro/N-255HM-V
						1-FM-68-397	Target Rock/300592-1		
This loop controls reactor vessel head vent throttle valve 2-FSV-68-397. This valve is controlled in the Main Control Room by hand indicating controller 2-HIC-68-397 (on panel 2-M-4).								2-FM-68-397A	Foxboro/N-2AI-T2V+VE
								2-FM-68-397B	Foxboro/N-2AO-VAI
This loop is functionally equivalent to Unit 1.								2-HC-68-397	Foxboro/N-2AX+DIO
68	2-F-68-396-B	Reactor Vessel Head Vent Throttle Manual Loading Station (Train B)	N	Flow Loop	53756	1-HIC-68-396	Westinghouse/75HC3000 208-101 2212	2-HIC-68-396	Foxboro/N-255HM-V
						1-FM-68-396	Target Rock/300592-1		
This loop controls reactor vessel head vent throttle valve 2-FSV-68-396. This valve is controlled in the Main Control Room by hand indicating controller 2-HIC-68-396 (on panel 2-M-4).								2-FM-68-396A	Foxboro/N-2AI-T2V+VE
								2-FM-68-396B	Foxboro/N-2AO-VAI
This loop is functionally equivalent to Unit 1.								2-HC-68-396	Foxboro/N-2AX+DIO

Review of Invensys Process Systems (Foxboro) SPEC 200 Safety-Related Analog Control System

Subject: Review of Invensys Process Systems (IPS) Foxboro SPEC 200 Safety-Related Analog Control System for use at Watts Bar Nuclear Plant Unit 2

Supporting documentation for the use of the Foxboro SPEC 200 control system in Safety-Related applications at Watts Bar Nuclear Plant Unit 2 has be reviewed and approved by Bechtel Engineering. The review included the Foxboro Certificate of Conformance (COC) submitted for each component supplied. The COC for each component is included in IPS document number 800063-106. The document contains the calibration data sheets, Record of test results, certificate of conformance, and commercial grade dedication, if applicable, for each component supplied for the Auxiliary Feedwater and Emergency Gas Treatment Systems, TVA contract number 69016. The COC documents the qualifications of components in accordance with the requirements of the TVA approved Design Specification issued for the procurement of the safety-related control system.

Additionally, documents that support the qualification of the SPEC 200 system for safety-related applications are panel seismic qualification reports and EMI/RFI qualification report. The seismic qualification reports for panel 0-L-430 (EGTS) and 2-L-381A (AFW) were reviewed and approved by Bechtel Equipment Seismic Qualification (ESQ) group while the EMI/FRI qualification report was reviewed and approved by TVA Corporate EMI Specialist.

A listing of all the qualification documentation associated with the Foxboro SPEC 200 control system is listed below.

The documentation is assembled per cabinets with internal components, controllers, and housing for controls. Each section has Certificate of Conformance for each component with reference to the qualification reports.

Emergency Gas Treatment System (EGTS):

- Nuclear Qualification Service (NQS) seismic report 1703A Rev1 for Panel 0-L-430
- United Controls International, Seismic Analysis Report for Emergency Gas Treatment System Test Panel Train A & B, Report No. SA-3264-2

Auxiliary Feedwater System (AFW):

- United Controls International, Seismic Analysis Report for Invensys system, Inc., Auxiliary Feedwater System, Panel 2-L-381A, Report No. SA-3264-1

Common Reports for EGTS and AFW systems:

- IPS Electromagnetic Compatibility Test Reports, Document No. 800063-1930
- TVA Corporate EMI/RFI test review work sheet for Foxboro SPEC 200 System R1 (B43 090731 001)
- Evaluation of Foxboro report number 800063-1820 (AFW & EGTS Seismic, Environmental Qualification Report)

Common External Requirement Specifications:

- 10CFR50 Appendix B
- IEEE-313-1974
- IEEE-344-1975

Common Internal Requirement Specifications:

- ASME NQA-1 Part-1 as defined in Invensys Systems, Inc. Corporate Quality Assurance Program Requirement, QMS-2, Revision S
- Foxboro (IPS) Component Qualification Reports
- Electroswitch – Qualification Reports 2970-2A; 3151-1; ESC-Std-1000 Technical Publication; NQS-Report 1702A

All Reports referenced in this document are availed upon request. Each component listed has at least the cover sheet of the referenced report as an aid. See "References" Section for reports referenced.

Table of Contents:

SECTION 1:
(EMERGENCY GAS TREATMENT SYSTEM)
Cabinet 0-L-430

a) Nest – Model No. N-2ANU-P
b) Current to Voltage Converter – Model No. N-2AI-I2V
c) Controller with Removable Manual – Model No. N-2AC
d) Control Module – Model No. N-2AX+A4
e) Voltage to Current Converter – Model No. N-2AO-V2I
f) Contact Output Isolator – Model No. N-2AO-L2C-R
g) Power Supply – Model No. N-2AX+PS9A

SECTION 2:
(AUXILIARY FEEDWATER SYSTEM)
Cabinet 2-L-381A

a) Nest – Model No. N-2ANU-P
b) Current to Voltage Converter – Model No. N-2AI-I2V
c) Auto/Manual Balance and Bias Card - Model No. N-2AC-M3
d) Auto/Manual Balance and Bias Card - Model No. N-2AX+AM
e) Alarm, Relay Output – Model No. N-2AP
f) Alarm, Relay Output – Model No. N-2AX+ALM-AR
g) Square Root Converter – Model No. N-2AX+SQE
h) Distribution Module - Model No. N-2AX+DSI, N-ECP-8269B
i) Power Supply – Model No. N2AX+PS9A, N-ECEP-90029
j) Contact Output Isolator – Model No. N-2AO-L2C-R
k) Voltage to Current Converter - Model No. N-2AO-VAI
l) Contact Input Isolator – Model no. N-2AI-C2L
m) Control Module – Model No. N-2AX+A4

SECTION 3:
(Control Stations and Supporting Hardware)

a) 250 Series, Style E, Display Station – Model No. N-2AX+M2NH
b) 250 Series, Style E, Display Station – Model No. N-250HM-M2NH-F
c) Display Housing - Model No. N-2AX+H144
d) Display Housing - Model No. N-2AX+H048
e) Retaining Bar – Model No. N-2AX+RB01
f) Transfer Switches – ELECTROSWITCH – Model No. 72426M-2
g) Internal Wiring – COC dated 07/22/2009
h) External Communication Cables
    1. 20' Cable – Model No. N-2AK-FF020 – S/N 5683071 to 5683074
    2. 20' Cable - Model No. N-2AK-FF020 – S/N 5683075
    3. 125' Cable – Model No. N-2AK-FF125 – S/N 5683084
    4. 150' Cable - Model No. N-2AK-FF150 – S/N 5683085 to 5683089
    5. 150' Cable - Model No. N-2AK-FF150 – S/N 5683090
    6. 200' Cable - Model No. N-2AK-FF200 – S/N 5683062 to 5683063
    7. 270' Cable - Model No. N-2AK-FF270 – S/N 5683064 to 5683067
    8. 310' Cable - Model No. N-2AK-FF310 – S/N 5683068
    9. 525' Cable - Model No. N-2AK-FF525 – S/N 5683069 to 5683070

SECTION 4:
(References)

1) Nuclear Qualification Service (NQS) seismic report 1703A Rev1 for Panel 0-L-430
2) United Controls International, Seismic Analysis Report for Emergency Gas Treatment System Test Panel Train A & B, Report No. SA-3264-2
3) United Controls International, Seismic Analysis Report for Invensys system, Inc., Auxiliary Feedwater System, Panel 2-L-381A, Report No. SA-3264-1
4) IPS Electromagnetic Compatibility Test Reports, Document No. 800063-1930
5) TVA Corporate EMI/RFI test review work sheet for Foxboro SPEC 200 System R1 (B43 090731 001)
6) Evaluation of Foxboro report number 800063-1820 (AFW & EGTS Seismic, Environmental Qualification Report)
7) Foxboro (IPS) Component Qualification Reports
8) Electroswitch – Qualification Reports 2970-2A; 3151-1; ESC-Std-1000 Technical Publication; NQS-Report 1702A

ENCLOSURE 1

Responses To Licensee Open Items To Be Resolved For SER Approval

ATTACHMENT 2

(This Attachment contained on the OSM)

1. Drawing Cross Reference List for FSAR Chapter 7

2. Electronic Copies of Legible Current Drawings

Figure #	Title	Drawing No.
Figure 7.1-1	Protection System Block Diagram	NA
Figure 7.1-2	Powerhouse-Units 1 and 2 Wiring Diagrams Control Boards Critical Wiring Braid Installation	45W1640 Providing 2-45W2640 and 2-45W2640-1 which provide U2 separation details.
Figure 7.1-3-SH-1	Train A and Train B Process Interlocks	NA
Figure 7.1-3-SH-2	Train A and Train B Process Interlocks	NA
Figure 7.1-3-SH-3	Train A and Train B Process Interlocks	NA
Figure 7.1-3-SH-4	Train A and Train B Process Interlocks	NA
Figure 7.2-1-SH-1	Powerhouse Unit 1 Electrical Logic Diagrams - Reactor Protection System	47W611-99-1
Figure 7.2-1-SH-2	Powerhouse Unit 1 Electrical Logic Diagrams - Reactor Protection System	47W611-99-2
Figure 7.2-1-SH-3	Powerhouse Unit 1 Electrical Logic Diagrams - Reactor Protection System	47W611-99-6
Figure 7.2-1-SH-4	powerhouse Unit 1 Electrical Logic Diagrams - Reactor Protection System	47W611-3-8
Figure 7.2-2	Setpoint Reduction Function for Overpower and Overtemperature ΔT Trips	NA
Figure 7.3-1	ESF Test Circuits (Typical)	NA
Figure 7.3-2	Deleted by Amendment 81	NA
Figure 7.3-3-SH-1	Powerhouse Units 1 & 2 Electrical Logic Diagram Feedwater System	47W611-3-2
Figure 7.3-3-SH-2	Powerhouse Units 1 & 2 Auxiliary Feedwater System Logic Diagram	47W611-3-4
Figure 7.3-3-SH-3	Powerhouse Units 1 & 2 Electrical Logic Diagram for Safety Injection System	47W611-63-1
Figure 7.3-3-SH-4	Powerhouse Units 1 & 2 Logic Electrical Diagram for Containment Isolation	47W611-88-1 Not Sent
Figure 7.6-1	Deleted by Amendment 65	NA
Figure 7.6-2	Deleted by Amendment 65	NA
Figure 7.6-3	Powerhouse Unit 1 Electrical Logic Diagram for Safety Injection System	47W611-63-7
Figure 7.6-4	Powerhouse Auxiliary Building Units 1& 2 Wiring Diagrams for Safety Injection System	45W760-63-2
Figure 7.6-5	Reactor Building Unit 1 Variable Processing for Low Temperature Interlocks for RCS Pressure Control	47W611-68-3
Figure 7.6-6-SH-1	Powerhouse Unit 1 Electrical Logic Diagram for Safety Injection System	47W611-63-2
Figure 7.6-6-SH-2	Powerhouse Unit 1 Electrical Logic Diagram for Safety Injection System	47W611-63-5
Figure 7.6-6-SH-3	Powerhouse Electrical Logic Diagram Residual Heat Removal System	47W611-74-1
Figure 7.6-7-SH-1	RHR Suction Isolation Valve Interlocks	NA

Figure #	Title	Drawing No.
Figure 7.6-7-SH-2	RHR Bypass Valve Logic FCV-74-8 T (FCV-7 4-9)	NA
Figure 7.7-1	Simplified Block Diagram of Reactor Control System	NA
Figure 7.7-10	Typical Location of Control Board Systems	NA
Figure 7.7-11	Simplified Block Diagram Rod Control System	NA
Figure 7.7-12	Control Bank D Partial Simplified Schematic Diagram Power Cabinets 1BD and 2BD	NA
Figure 7.7-2	Control Bank Rod Insertion Monitor	NA
Figure 7.7-3	Rod Deviation Comparator	NA
Figure 7.7-4	Block Diagram of Pressurizer Pressure Control System	NA
Figure 7.7-5	Block Diagram of Pressurizer Level Control System	NA
Figure 7.7-6	Block Diagram of Steam Generator Water Level Control System	NA
Figure 7.7-7	Block Diagram of Main Feedwater Pump Speed Control System	NA
Figure 7.7-8	Block Diagram of Steam Dump Control System	NA
Figure 7.7-9	Incore Instrument Sysem	NA
Figure 7A-1	Instrumentation Symbols and Tabulation from TVA DS E18.3.3	NA
Figure 7A-2	Mechanical System Identification Numbers	85M430B617-2D
Figure 7A-3	Mechanical Flow and Control Diagram Symbols	NA
Figure 7A-4	Mechanical Basic Instrumentation and Radiation Symbols	NA
Figure 7A-5	Mechanical Application of Basic Instrumentation Symbols	NA
Figure 7A-6	Mechanical Digital Logic Symbols (and/or)	NA

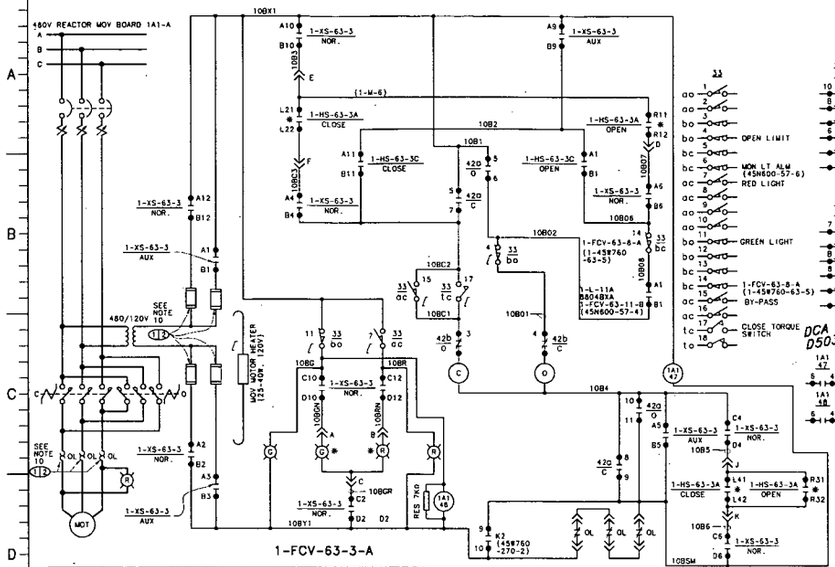

COMPONENT ID NO.	VLV NO.	VALVE NOMENCLATURE	BOARD	WIRE PREFIX	CONTROL SWITCHES	UNIT CONT RM SW LOC	FUSE NUMBERS NOR.	FUSE NUMBERS AUX
1-FCV-63-3-A	8813	SIS PUMPS RECIR TO RWST	1A1-A	10B	1-HS-62-3A, C, 1-XS-63-3	1-M-6	A110/11N	A110/11A
2-FCV-63-3-A	8813	SIS PUMPS RECIR TO RWST	2A1-A	10B	2-HS-62-3A, B, 2-XS-63-3	2-M-6	A110/11N	A110/11A

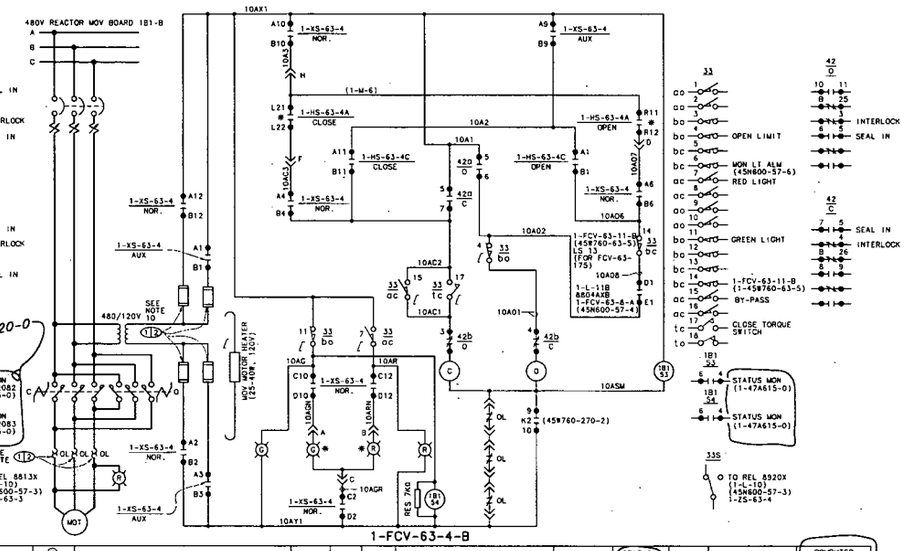

COMPONENT ID NO.	VLV NO.	VALVE NOMENCLATURE	OVLD BYPASS	BOARD	WIRE PREFIX	CONTROL SWITCHES	UNIT CONT RM SW LOC	STATUS MONITOR RELAYS	8804AXB CONTACT	FUSE NUMBERS NOR.	FUSE NUMBERS AUX	COMPUTER POINTS
1-FCV-63-4-B	8814	SIS PUMP A-A DISCHARGE TO RWST SHUTOFF VLV	K2 9-10	1B1-B	10A	1-HS-63-4A, C, 1-XS-63-4	1-M-6	1B1-53, -54	D1, E1	B110/1N	B110/1A	FD2240;FD2241
2-FCV-63-4-B	8814	SIS PUMP A-A DISCHARGE TO RWST SHUTOFF VLV	K2 9-10	2B1-B	10A	2-HS-63-4A, B, 2-XS-63-4	2-M-6	2B1-53, -54	D1, E1	B110/1N	B110/1A	
1-FCV-63-175-B	8920	SIS PUMP B-B DISCHARGE TO RWST SHUTOFF VLV	K5 3-4	1B1-B	13D	1-HS-63-175A, C, 1-XS-63-175	1-M-6	1B1-51, -52	A1, B1	B113/31N	B113/31A	FD2238;FD2239
2-FCV-63-175-B	8920	SIS PUMP B-B DISCHARGE TO RWST SHUTOFF VLV	K5 3-4	2B1-B	13D	2-HS-63-175A, B, 2-XS-63-175	2-M-6	2B1-51, -52	A1, B1	B113/31N	B113/31A	

NOTES:

1. ALL EQUIPMENT IS LOCATED ON THE BOARD FROM WHICH ITS ASSOCIATED LOAD IS POWERED UNLESS OTHERWISE DESIGNATED.
2. 33S IS A POSITION SWITCH MOUNTED ON THE BODY OF THE MOV AND IS TRIPPED BY A STEM MOUNTED CONTACT ARM.
3. FOR UNIT 2 DESIGNATIONS CHANGE UNIT 1 PREFIX FROM 1 TO 2. WIRE PREFIX, CONTROL SWITCH NUMBERS, RELAY NUMBERS, ECT. ARE THE SAME UNLESS NOTED.
4. ALL SYSTEM ANNUNCIATION WILL APPEAR TOGETHER ON A SHEET WITHIN ITS APPLICABLE SYSTEM SERIES.
5. FUSE NUMBERS SHOWN IN TABLES SHOULD BE COMBINED WITH THE APPLICABLE BOARD PREFIX LISTED BELOW TO FORMULATE COMPLETE UNIQUE FUSE IDENTIFICATION NUMBER:

   REACTOR MOV BOARDS: 1-FU-213-
   CHEMICAL AND VOLUME CONT BDS: 0-FU-217-

   EXAMPLE:
   1-FU-213-A110/11N
   └── CHANGE TO 2 FOR UNIT 2 BOARDS

6.

7. TORQUE AND LIMIT SWITCHES FOR ALL MOTOR OPERATED VALVES SHOULD BE SET ACCORDING TO THE LATEST REVISION OF GENERAL CONSTRUCTION SPECIFICATION G-50-TORQUE AND LIMIT SWITCH SETTINGS FOR MOTOR OPERATED VALVES.
8.

9. DETERMINATE CABLES AT THE LOAD SIDE OF THE BREAKER FOR UNIT 2 EQUIPMENT ONLY (BD B).

10. CONTROL POWER FUSES AND THERMAL OVERLOADS REFERENCING THIS NOTE HAVE BEEN REMOVED TO ISOLATE UNIT 1/ UNIT2 INTERFACE POINTS. (UNIT 2 ONLY)

11. POWER CABLES REFERENCING THE NOTE HAVE BEEN DETERMINATED AT THE LOAD SIDE OF THE BREAKER TO ISOLATE UNIT 1 / UNIT 2 INTERFACE POINTS. (UNIT 2 ONLY)

REFERENCE DRAWINGS:

SINGLE LINES:
480V REACTOR MOV BOARDS----------45W751-1; -2, -3, -7, -8, -9
480V CHEMICAL & VOLUME CONTROL BDS----45W746-1; -2
INTERNAL CONNECTION DIAGRAMS:
45B1766
45B1768
45B2766
45B2768
45W798
EXTERNAL CONNECTION DIAGRAMS:
45W1766
45W1768
45W2766
45W2768
45W798

SYMBOLS:

/ --- ON OR NEAR LOCAL CONTROL STATION
CC --- LOCAL PANEL
✱ --- UNIT CONTROL BOARD IN MAIN CONTROL ROOM
▽ --- DIESEL GENERATOR RELAY PANEL
⊗ --- NSSS RACK IN AUXILIARY INSTRUMENT ROOM
□ --- TVA BALANCE OF PLANT RACKS IN AUX INSTR ROOM

1 2 -- DENOTES UNIT 1/UNIT 2 INTERFACE POINT (NONSAFETY-RELATED) UNIT 2 BOARDS ONLY

1 2 -- DENOTES UNIT 1/UNIT 2 INTERFACE POINT (SAFETY-RELATED) (UNIT 2 BOARDS ONLY.)

	FULL OPEN	FULL CLOSED
ac		
aa		
bo		
bc		

VALVE POSITION INDICATION (SOLID LINES INDICATE CLOSED CONTACT)

tc -------- TORQUE SWITCH OPENS ON CLOSING MECHANICAL OVERLOAD.
to -------- TORQUE SWITCH OPENS ON OPENING MECHANICAL OVERLOAD.

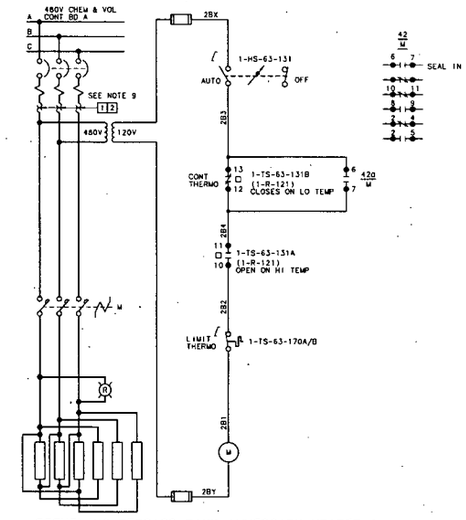

REFUELING STORAGE TANK IMMERSION HEATER A

FSAR FIG. 7.6-4

HTR	COMPONENT IDENT. NO.	BD	WIRE PREFIX	CONTROL SWITCH	CONTROL THERMO NUMBER	CONTROL THERMO PNL	LIMIT THERMO	FUSE NO. (NOTE 5)
A	1-HTR-63-131A, B	A	2B	1-HS-63-131	1-TS-63-131A & B	1-R-121	1-TS-63-170A/B	A2/11
B	1-HTR-63-132A, B	A	3B	1-HS-63-132	1-TS-63-132A & B	1-R-121	1-TS-63-170B/A	A3/11
C	2-HTR-63-131A, B	B	2B	2-HS-63-131	2-TS-63-132A & B	2-R-121	2-TS-63-170A/B	B2/11
D	2-HTR-63-132A, B	B	3B	2-HS-63-132	2-TS-63-132A & B	2-R-121	2-TS-63-170B/A	B3/11

THIS CONFIGURATION CONTROL DRAWING SUPERSEDES UNIT 1 AS-CONSTRUCTED DRAWING 45W760-63-2 REV K.

REV	CHANGE REF	PREPARER	CHECKER	APPROVED	DATE
9	D-50301 ADMIN	MAF	ESJ	DLO	1-19-01

REVISED PER DCA'S 050301-3619-0 & -3620-0 (STG 34). DELETED SYSTEM BOUNDARIES PER ADMIN.

SCALE: NTS — EXCEPT AS NOTED

PROJECT FACILITY
AUXILIARY BUILDING
UNIT 1 & 2

TITLE
WIRING DIAGRAMS
SAFETY INJECTION SYSTEM
SCHEMATIC DIAGRAM

1 — WATTS BAR NUCLEAR PLANT — TENNESSEE VALLEY AUTHORITY — Q

DESIGN		INITIAL ISSUE	ENGINEERING APPROVAL
DRAFTER C.W. JOHNSON	CHECKER J.D. MOYERS	RO ISSUE PER WBEP 5.17 & RIMS B26 '90 0614 376	1 D.P. PERRER
DESIGNER M.L. CHAPMAN	REVIEWER D.F. FAULKNER		2 R.T. GRAHAM
			3 C.C. LYKE FOR MCB

DATE 7-21-90 | 85 | E | 1-45W760-63-2 | R9

ISSUED BY: J. EDWARD GIBBS/WSR

PRINTS REQ'D R ____ PRINT SIZE F — BR OR PROJ AB CE EE ME NE FE HE SE IE EL BF RB SO — PRINT SIZE H — BR OR PROJ AB CE EE ME NE FE HE SE IE EL BF RB SO

CAD MAINTAINED DRAWING

CONFIGURATION CONTROL DRAWING

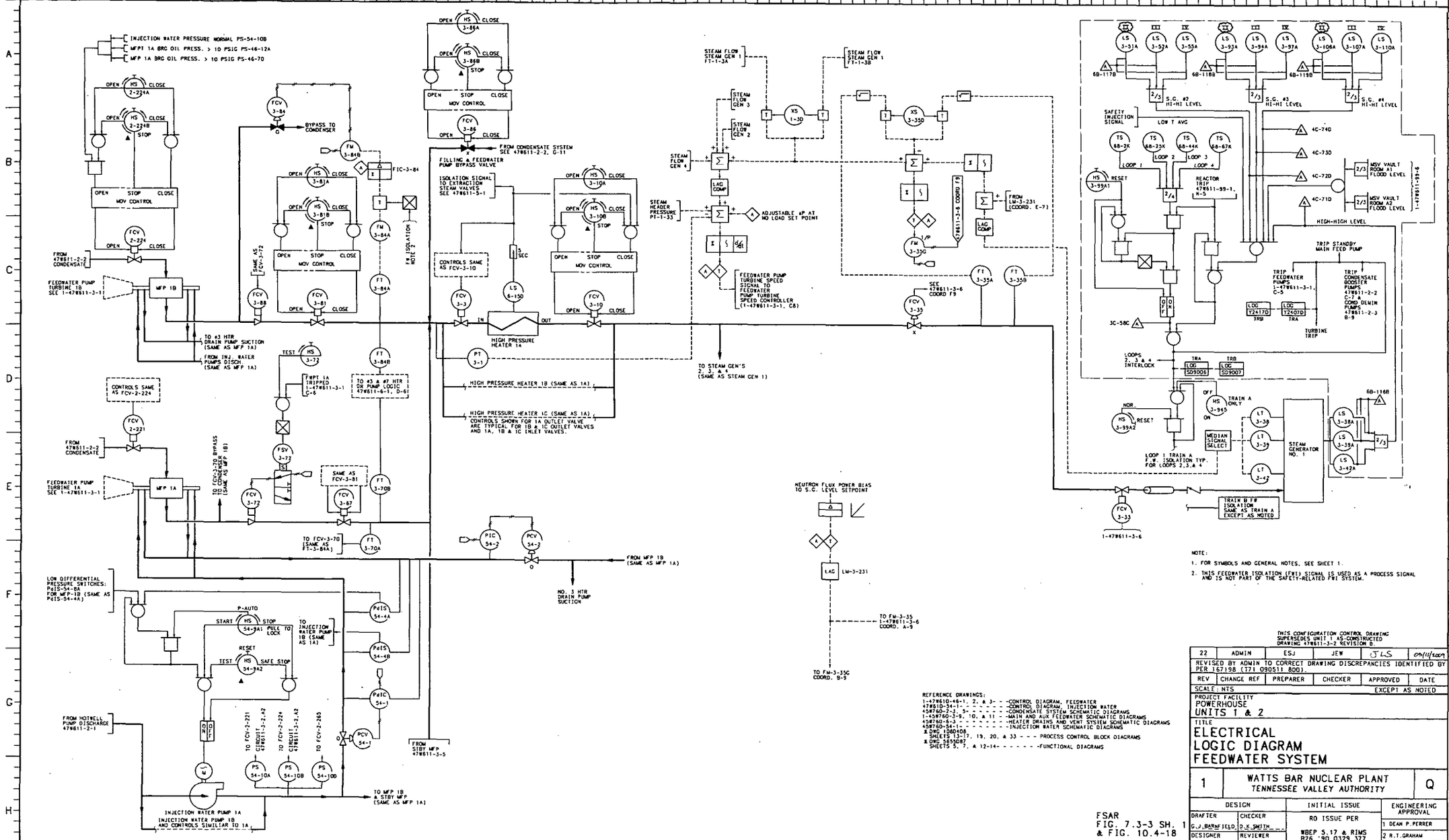

NOTE:

1. FOR SYMBOLS AND GENERAL NOTES, SEE SHEET 1.
2. THIS FEEDWATER ISOLATION (FWI) SIGNAL IS USED AS A PROCESS SIGNAL AND IS NOT PART OF THE SAFETY-RELATED FWI SYSTEM.

REFERENCE DRAWINGS:
1-47W610-46-1, 2, & 3- - -CONTROL DIAGRAM, FEEDWATER
47W610-54-1- - - - - - - -CONTROL DIAGRAM, INJECTION WATER
45W760-2-1 5- - - - - - -CONDENSATE SYSTEM SCHEMATIC DIAGRAMS
1-45W760-3-9, 10, & 11 - -MAIN AND AUX FEEDWATER SCHEMATIC DIAGRAMS
45W760-6-3- - - - - - - -HEATER DRAINS AND VENT SYSTEM SCHEMATIC DIAGRAMS
45W760-54-1- - - - - - - -INJECTION WATER SCHEMATIC DIAGRAMS
* DWG 1080408
SHEETS 13-17, 19, 20, & 33 - - - PROCESS CONTROL BLOCK DIAGRAMS
* DWG 3655D87
SHEETS 5, 7, & 12-14- - - - - -FUNCTIONAL DIAGRAMS

FSAR FIG. 7.3-3 SH. 1 & FIG. 10.4-18

THIS CONFIGURATION CONTROL DRAWING SUPERSEDES UNIT 1 AS-CONSTRUCTED DRAWING 47W611-3-2 REVISION B.

REV	CHANGE REF	PREPARER	CHECKER	APPROVED	DATE
22	ADMIN	ESJ	JEW	JLS	09/11/2001

REVISED BY ADMIN TO CORRECT DRAWING DISCREPANCIES IDENTIFIED BY PER 167198 (T71 090511 800).

SCALE: NTS — EXCEPT AS NOTED

PROJECT FACILITY
POWERHOUSE
UNITS 1 & 2

TITLE
ELECTRICAL LOGIC DIAGRAM FEEDWATER SYSTEM

1 — WATTS BAR NUCLEAR PLANT, TENNESSEE VALLEY AUTHORITY — Q

DESIGN		INITIAL ISSUE	ENGINEERING APPROVAL
DRAFTER G.J.BARNFIELD	CHECKER D.K.SMITH	RO ISSUE PER WBEP 5.17 & RIMS B26 '90 0329 377	1 DEAN P.PERRER
DESIGNER M.L.CHAPMAN	REVIEWER D.F.FAULKNER		2 R.T.GRAHAM
			3 J.F.TORTORA/MCB

DATE 7-21-90 | 85 | E | 1-47W611-3-2 | R22

ISSUED BY: J.EDWARD GIBBS/MSR

PRINTS REQ'D R

CAD MAINTAINED DRAWING

CONFIGURATION CONTROL DRAWING

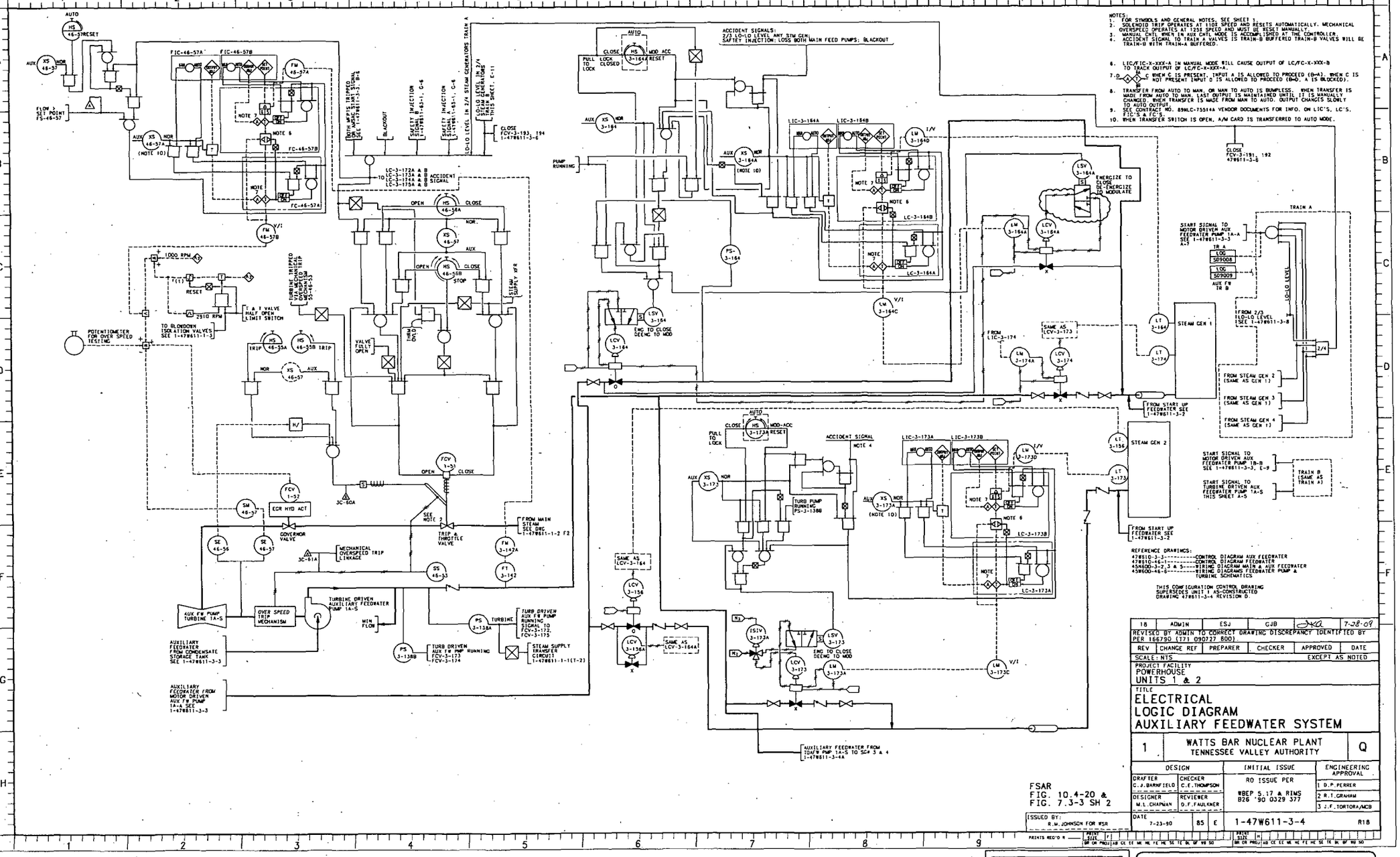
NOTES:
1. FOR SYMBOLS AND GENERAL NOTES, SEE SHEET 1.
2. SOLENOID TRIP OPERATES AT 1106 SPEED AND RESETS AUTOMATICALLY. MECHANICAL OVERSPEED OPERATES AT 1254 SPEED AND MUST BE RESET MANUALLY.
3. MANUAL CNTL WHEN I/R AUX CNTL MODE IS ACCOMPLISHED AT THE CONTROLLER.
4. ACCIDENT SIGNAL TO TRAIN A VALVES IS BUFFERED TRAIN-B VALVES WILL BE TRAIN-B WITH TRAIN-A BUFFERED.
6. LIC/FIC-X-XXX-A IN MANUAL MODE WILL CAUSE OUTPUT OF LC/FC-X-XXX-B TO TRACK OUTPUT OF LC/FC-X-XXX-A.
7. IF C IS PRESENT, INPUT A IS ALLOWED TO PROCEED (0→A). WHEN C IS NOT PRESENT INPUT D IS ALLOWED TO PROCEED (D→0, A IS BLOCKED).
8. TRANSFER FROM AUTO TO MAN, OR MAN TO AUTO IS BUMPLESS. WHEN TRANSFER IS MADE FROM AUTO TO MAN, LAST OUTPUT IS MAINTAINED UNTIL IT IS MANUALLY CHANGED. WHEN TRANSFER IS MADE FROM MAN TO AUTO, OUTPUT CHANGES SLOWLY TO AUTO OUTPUT.
9. SEE CONTRACT NO. 89WLC-75514A VENDOR DOCUMENTS FOR INFO. ON LIC'S, LC'S, FIC'S & FC'S.
10. WHEN TRANSFER SWITCH IS OPEN, A/M CARD IS TRANSFERRED TO AUTO MODE.
ACCIDENT SIGNALS:
2/3 LO-LO LEVEL ANY STM GEN;
SAFTIEY INJECTION; LOSS BOTH MAIN FEED PUMPS; BLACKOUT
REFERENCE DRAWINGS:
47B610-3-3 CONTROL DIAGRAM AUX FEEDWATER
47B610-46-1 CONTROL DIAGRAM FEEDWATER
45W600-3-2,3 & 5 WIRING DIAGRAM MAIN & AUX FEEDWATER
45W600-46-6 WIRING DIAGRAMS FEEDWATER PUMP A TURBINE SCHEMATICS
THIS CONFIGURATION CONTROL DRAWING SUPERSEDES UNIT 1 AS-CONSTRUCTED DRAWING 47W611-3-4 REVISION D.
TRAIN A
TRAIN B (SAME AS TRAIN A)
STEAM GEN 1
STEAM GEN 2
AUX FW PUMP TURBINE 1A-S
TURBINE DRIVEN AUXILIARY FEEDWATER PUMP 1A-S
OVER SPEED TRIP MECHANISM
MECHANICAL OVERSPEED TRIP LINKAGE
GOVERNOR VALVE
TRIP & THROTTLE VALVE
EGR HYD ACT
POTENTIOMETER FOR OVER SPEED TESTING
TO BLOWDOWN ISOLATION VALVES SEE 1-47W611-1-3
AUXILIARY FEEDWATER FROM CONDENSATE STORAGE TANK SEE 1-47W611-3-3
AUXILIARY FEEDWATER FROM MOTOR DRIVEN AUX FW PUMP 1A-A SEE 1-47W611-3-3
AUXILIARY FEEDWATER FROM TDAFW PMP 1A-S TO SG# 3 & 4 1-47W611-3-4A
FROM START UP FEEDWATER SEE 1-47W611-3-2
FROM START UP FEEDWATER SEE 1-47W611-3-3
FROM STEAM GEN 2 (SAME AS GEN 1)
FROM STEAM GEN 3 (SAME AS GEN 1)
FROM STEAM GEN 4 (SAME AS GEN 1)
FROM 2/3 LO-LO LEVEL SEE 1-47W611-3-8
START SIGNAL TO MOTOR DRIVEN AUX FEEDWATER PUMP 1A-A SEE 1-47W611-3-3 A-7
START SIGNAL TO MOTOR DRIVEN AUX FEEDWATER PUMP 1B-B SEE 1-47W611-3-3, E-9
START SIGNAL TO TURBINE DRIVEN AUX FEEDWATER PUMP 1A-S THIS SHEET A-5
TURB DRIVEN AUX FW PUMP RUNNING SIGNAL TO FCV-3-172, FCV-3-175
TURB DRIVEN AUX FW PMP RUNNING FCV-3-173 FCV-3-174
STEAM SUPPLY TRANSFER CIRCUIT 1-47W611-1-1(T-2)
TURB PUMP RUNNING PS-3-138B
ENERGIZE TO CLOSE DE-ENERGIZE TO MODULATE
ENG TO CLOSE DEENG TO MOD
SAME AS LCV-3-164
SAME AS LCV-3-164A
SAME AS LCV-3-173
SAME AS LCV-3-174
CLOSE FCV-3-193, 194 1-47W611-3-6
CLOSE FCV-3-191, 192 47W611-3-8
LO-LO LEVEL
FSAR FIG. 10.4-20 & FIG. 7.3-3 SH 2
ISSUED BY: R.M. JOHNSON FOR WSR
DESIGN
DRAFTER C.J. BARNFIELD
CHECKER C.E. THOMPSON
DESIGNER M.L. CHAPMAN
REVIEWER D.F. FAULKNER
INITIAL ISSUE
RO ISSUE PER WBEP 5.17 & RIMS B26 '90 0329 377
ENGINEERING APPROVAL
1 D.P. PERRER
2 R.T. GRAHAM
3 J.F. TORTORA/MCB
DATE 7-23-90
85 E
1-47W611-3-4
R18
REV | CHANGE REF | PREPARER | CHECKER | APPROVED | DATE
18 | ADMIN | ESJ | CJB | 7-28-09
REVISED BY ADMIN TO CORRECT DRAWING DISCREPANCY IDENTIFIED BY PER 166790 (171 090727 800)
SCALE: NTS EXCEPT AS NOTED
PROJECT FACILITY
POWERHOUSE
UNITS 1 & 2
TITLE
ELECTRICAL
LOGIC DIAGRAM
AUXILIARY FEEDWATER SYSTEM
1
WATTS BAR NUCLEAR PLANT
TENNESSEE VALLEY AUTHORITY
Q
CAD MAINTAINED DRAWING
CONFIGURATION CONTROL DRAWING

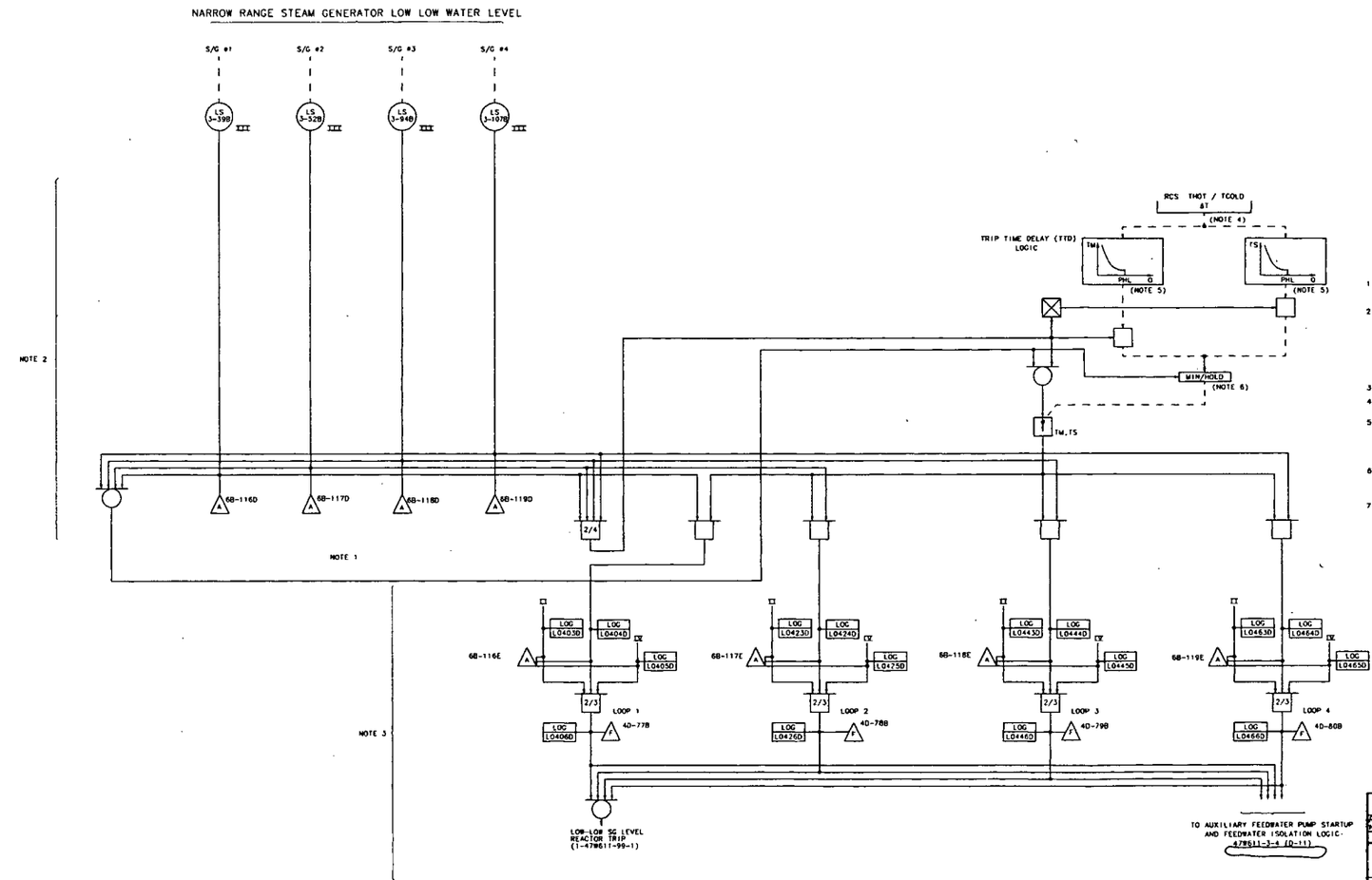

1. ONE COMMON ANNUNCIATOR WINDOW FOR EACH STEAM GENERATOR IS SHARED WITH ALARMS GENERATED IN THE OTHER PROTECTION SETS. THE ALARMS ARE DISABLED ABOVE THE POWER HIGH LIMIT (PHL).
2. THIS LOGIC IS SPECIFIC FOR PROTECTION SET III AND IS TYPICAL FOR PROTECTION SETS II AND IV. THE BISTABLE TAG NUMBERS ASSIGNED TO PROTECTION SETS II & IV ARE AS FOLLOWS:

	S/G #1	S/G #2	S/G #3	S/G #4
PROTECTION SET II	LS-3-38B	LS-3-51B	LS-3-93B	LS-3-106B
PROTECTION SET IV	LS-3-42B	LS-3-55B	LS-3-97B	LS-3-110B

3. THIS LOGIC IS REDUNDANT AND IS PERFORMED IN THE SSPS.
4. ΔT IS A SPECIAL TEMPERATURE SIGNAL USED FOR POWER INDICATION ONLY. CONVERSION TO POWER IS PERFORMED PRIOR TO THE TIMER FUNCTION GENERATOR.
5. THE FOLLOWING DEFINITIONS APPLY TO THE FUNCTION GENERATOR:
   TM = ELAPSED TIME IF SETPOINT REACHED IN MULTIPLE STEAM GENERATORS.
   TS = ELAPSED TIME IF SETPOINT REACHED IN ONE STEAM GENERATOR.
   PHL = POWER HIGH LIMIT.
   Q = THERMAL POWER.
6. AFTER RECEIPT OF THE CONTROL LOGIC INPUT THE MIN/HOLD UNIT OUTPUT WILL BE ALLOWED TO DECREASE IF THE UNIT INPUT DECREASES. IF THE INPUT TO THE UNIT INCREASES, THE UNIT OUTPUT WILL HOLD THE MINIMUM VALUE. SINCE RECEIPT OF CONTROL LOGIC.
7. REFERENCE WESTINGHOUSE DRAWING 3655DB7 SHEET 17.

FOR SYMBOLS AND GENERAL NOTES SEE SHEET 1

SYS 99

FSAR FIG. 7.2-1 SH 4

REV NO.	CHANGE REF	DATE	DFTR	CHKR	DSGN	RVWR	1APPD	2APPD	3APPD	ISSD
3	S-37112-A REVISED PER DCA S37112-06-0.	9-9-96	DLW	PDH	ESJ	NR	NR	NR		

SCALE: NTS — EXCEPT AS NOTED

PROJECT FACILITY
POWERHOUSE
UNIT 1

TITLE
ELECTRICAL LOGIC DIAGRAM FEEDWATER SYSTEM

1 — WATTS BAR NUCLEAR PLANT, TENNESSEE VALLEY AUTHORITY — Q

DESIGN		INITIAL ISSUE	ENGINEERING APPROVAL
DRAFTER T.L. BINGHAM	CHECKER P.D. HARTIGAN	RO ISSUE PER DCN S-23427-A DCA S23427-40-0	1 NR
DESIGNER M.L. CHAPMAN/NR	REVIEWER		2 NR
			3 DAN F. FAULKNER

DATE 9-16-93 | 85 | E | 1-47W611-3-8 | R3

ISSUED BY:

PROCADAM MAINTAINED DRAWING
THIS CONFIGURATION CONTROL DRAWING IS MAINTAINED BY THE NSM CAD UNIT AND IS NOW PART OF THE TVA PROCADAM DATABASE.

CONFIGURATION CONTROL DRAWING

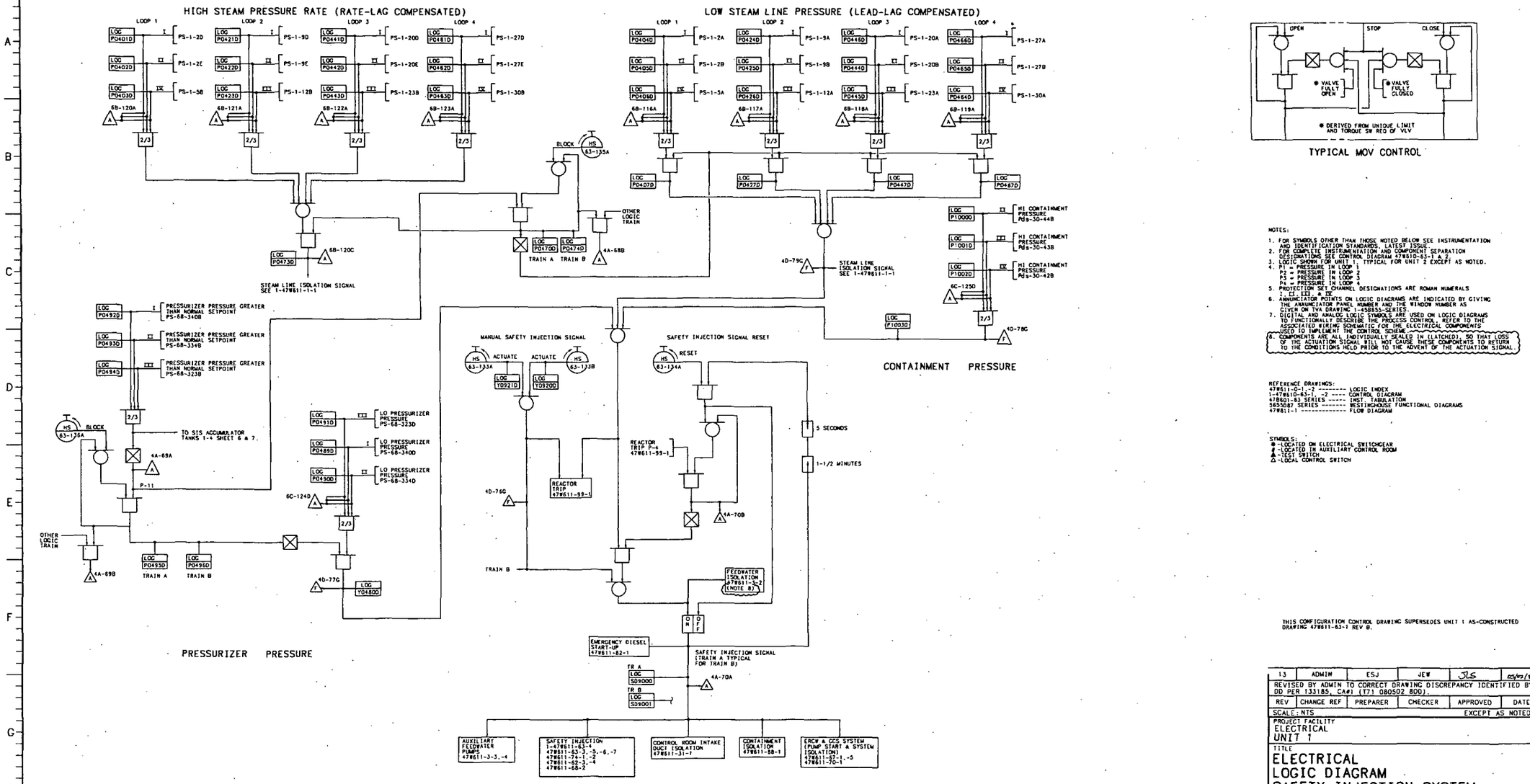

TYPICAL MOV CONTROL

NOTES:

1. FOR SYMBOLS OTHER THAN THOSE NOTED BELOW SEE INSTRUMENTATION AND IDENTIFICATION STANDARDS, LATEST ISSUE.
2. FOR COMPLETE INSTRUMENTATION AND COMPONENT SEPARATION DESIGNATIONS SEE CONTROL DIAGRAM 47W610-63-1 & 2.
3. LOGIC SHOWN FOR UNIT 1. TYPICAL FOR UNIT 2 EXCEPT AS NOTED.
4. P1 = PRESSURE IN LOOP 1
   P2 = PRESSURE IN LOOP 2
   P3 = PRESSURE IN LOOP 3
   P4 = PRESSURE IN LOOP 4
5. PROTECTION SET CHANNEL DESIGNATIONS ARE ROMAN NUMERALS I, II, III & IV.
6. ANNUNCIATOR POINTS ON LOGIC DIAGRAMS ARE INDICATED BY GIVING THE ANNUNCIATOR PANEL NUMBER AND THE WINDOW NUMBER AS GIVEN ON TVA DRAWING 1-45B855-SERIES.
7. DIGITAL AND ANALOG LOGIC SYMBOLS ARE USED ON LOGIC DIAGRAMS TO FUNCTIONALLY DESCRIBE THE PROCESS CONTROL. REFER TO THE ASSOCIATED WIRING SCHEMATIC FOR THE ELECTRICAL COMPONENTS USED TO IMPLEMENT THE CONTROL SCHEME.
8. COMPONENTS ARE ALL INDIVIDUALLY SEALED IN (LATCHED), SO THAT LOSS OF THE ACTUATION SIGNAL WILL NOT CAUSE THESE COMPONENTS TO RETURN TO THE CONDITIONS HELD PRIOR TO THE ADVENT OF THE ACTUATION SIGNAL.

REFERENCE DRAWINGS:
47W611-0-1,-2 ------- LOGIC INDEX
1-47W610-63-1, -2 ---- CONTROL DIAGRAM
47B601-83 SERIES ----- INST. TABULATION
3653087 SERIES ------- WESTINGHOUSE FUNCTIONAL DIAGRAMS
47W611-1 ------------- FLOW DIAGRAM

SYMBOLS:
● -LOCATED ON ELECTRICAL SWITCHGEAR
-LOCATED IN AUXILIARY CONTROL ROOM
▲ -TEST SWITCH
△ -LOCAL CONTROL SWITCH

THIS CONFIGURATION CONTROL DRAWING SUPERSEDES UNIT 1 AS-CONSTRUCTED DRAWING 47W611-63-1 REV B.

COMPANION DWGS:
47W611-63-2,-3,-4,-5,-6,-7,-8 --- LOGIC DIAGRAM

FSAR FIG 7.3-3 SH. 3

REV	CHANGE REF	PREPARER	CHECKER	APPROVED	DATE
13	ADMIN	ESJ	JEW	JLS	05/02/1991

REVISED BY ADMIN TO CORRECT DRAWING DISCREPANCY IDENTIFIED BY DD PER 133185, CA#1 (T71 080502 800).

SCALE: NTS — EXCEPT AS NOTED

PROJECT FACILITY
ELECTRICAL
UNIT 1

TITLE
ELECTRICAL LOGIC DIAGRAM SAFETY INJECTION SYSTEM

1 — WATTS BAR NUCLEAR PLANT, TENNESSEE VALLEY AUTHORITY — Q

DESIGN		INITIAL ISSUE	ENGINEERING APPROVAL
DRAFTER G.W. JOHNSON	CHECKER J.A. TALLEY	RO ISSUE PER WBEP 5.17 & RIMS B26 '90 0614 376	1 J.M. RUTHERFORD
DESIGNER M.L. CHAPMAN	REVIEWER D.F. FAULKNER		2 R.A. CAMPBELL
			3 J.F. TORTORA/MCB

ISSUED BY: R.M. JOHNSON FOR WSR

DATE 7-23-90 | 85 | E | 1-47W611-63-1 | R13

PRINTS REQ'D 8 — PRINT SIZE F — BR OR PROJ AB CE EC ME NE FE HE SE TE BL BF WB SQ — PRINT SIZE M — BR OR PROJ AB CE EC ME NE FE HE SE TE BL BF WB SQ

CAD MAINTAINED DRAWING

CONFIGURATION CONTROL DRAWING

NOTES:

1. FOR SYMBOLS AND GENERAL NOTES SEE DWG 1-47W611-63-1.
2. TO PREVENT VALVE FROM CHANGING TO A NON-SAFETY POSITION DUE TO A SPURIOUS SIGNAL, TWO CONTROL SIGNALS MUST APPEAR COINCIDENTLY FROM THE SAME SOURCE BEFORE THE VALVE WILL CHANGE POSITIONS. (SEE FCV-63-1, 5, 11).
3. FOR MOV CONTROL SEE DWG 1-47W611-63-1.

REFERENCE DRAWINGS:

1-47W611 ——— MECHANICAL FLOW DIAGRAM
1-47W610-63-SERIES ——— ELECTRICAL CONTROL DIAGRAMS
1-45W760-63-SERIES ——— ELECTRICAL SCHEMATIC DIAGRAMS
45W600-63-2 ——— ELECTRICAL SCHEMATIC DIAGRAM
45B601-63-SERIES ——— INSTRUMENT TABULATOINS

COMPANION DRAWINGS:

1-47W611-63-3,5

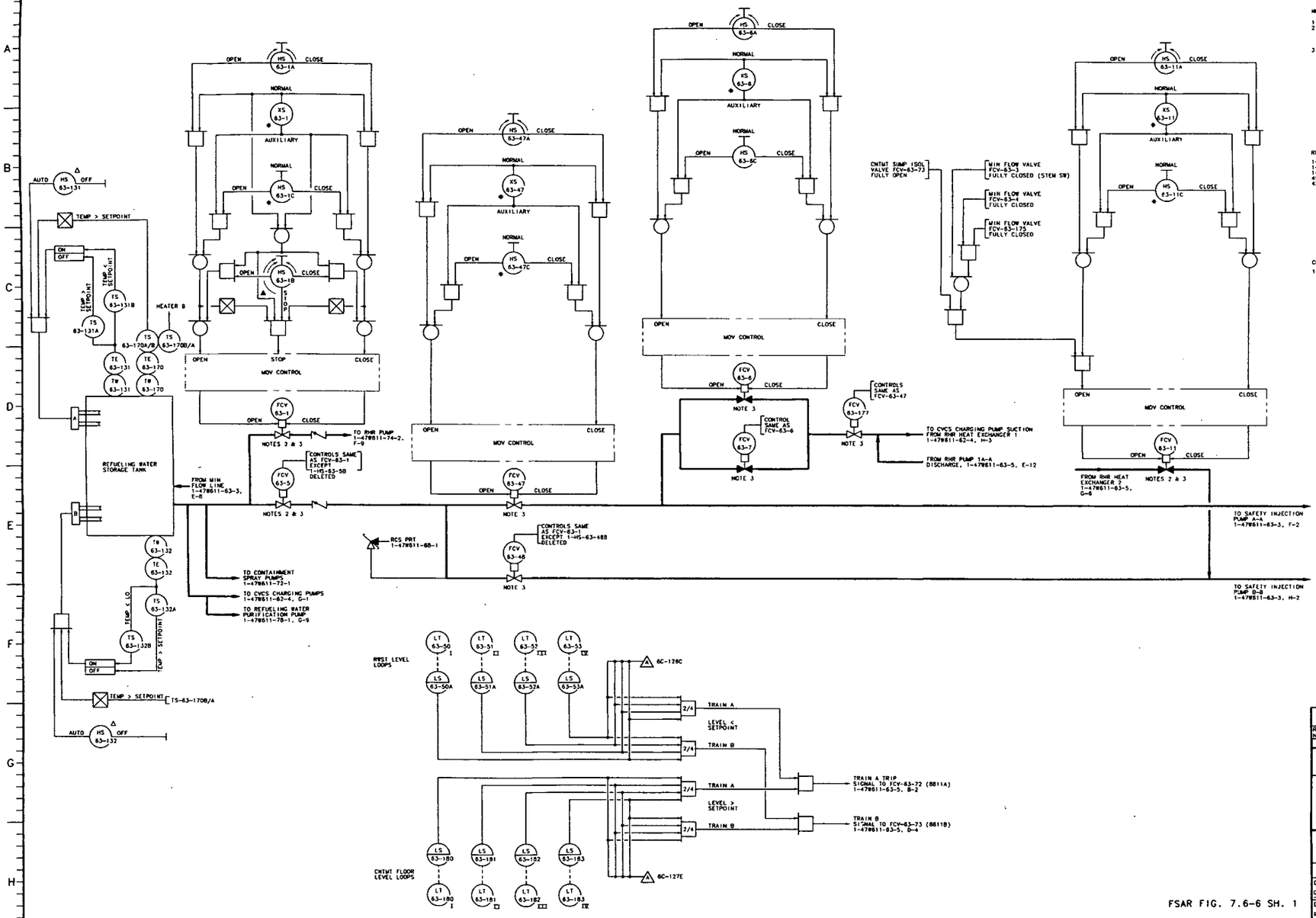

FSAR FIG. 7.6-6 SH. 1

REV NO.	CHANGE REF	DATE	DFTR	CHKR	DSGN	RVWR	APPD	APPD	APPD	ISSD
5	NR	1-13-95	EHB	PCH	JAT	NR	NR	NR	NR	NR
	INCORPORATED SYS 63 BOUNDARIES.									

SCALE: NTS — EXCEPT AS NOTED

PROJECT FACILITY
POWERHOUSE
UNIT 1

TITLE
ELECTRICAL
LOGIC DIAGRAM
SAFETY INJECTION SYSTEM

1 — WATTS BAR NUCLEAR PLANT — TENNESSEE VALLEY AUTHORITY — Q

DESIGN		INITIAL ISSUE	ENGINEERING APPROVAL
DRAFTER C.H. CLABOUGH	CHECKER FRANK LAYFIELD	RO ISSUE PER EAI-3.10 AND RIMS T28 '92 0121 B05	1 RON E. LESTER
DESIGNER RON E. LESTER	REVIEWER R.L. FORESTER		2 S. LIN
			3 C.C. LYKE FOR MCB

ISSUED BY: R.M. JOHNSON — DATE 1-27-92 — B5 — E — 1-47W611-63-2 — R5

PROCADAM MAINTAINED DRAWING
THIS CONFIGURATION CONTROL DRAWING IS MAINTAINED BY THE WBN CAD UNIT AND IS NOW PART OF THE TVA PROCADAM DATABASE

CONFIGURATION CONTROL DRAWING

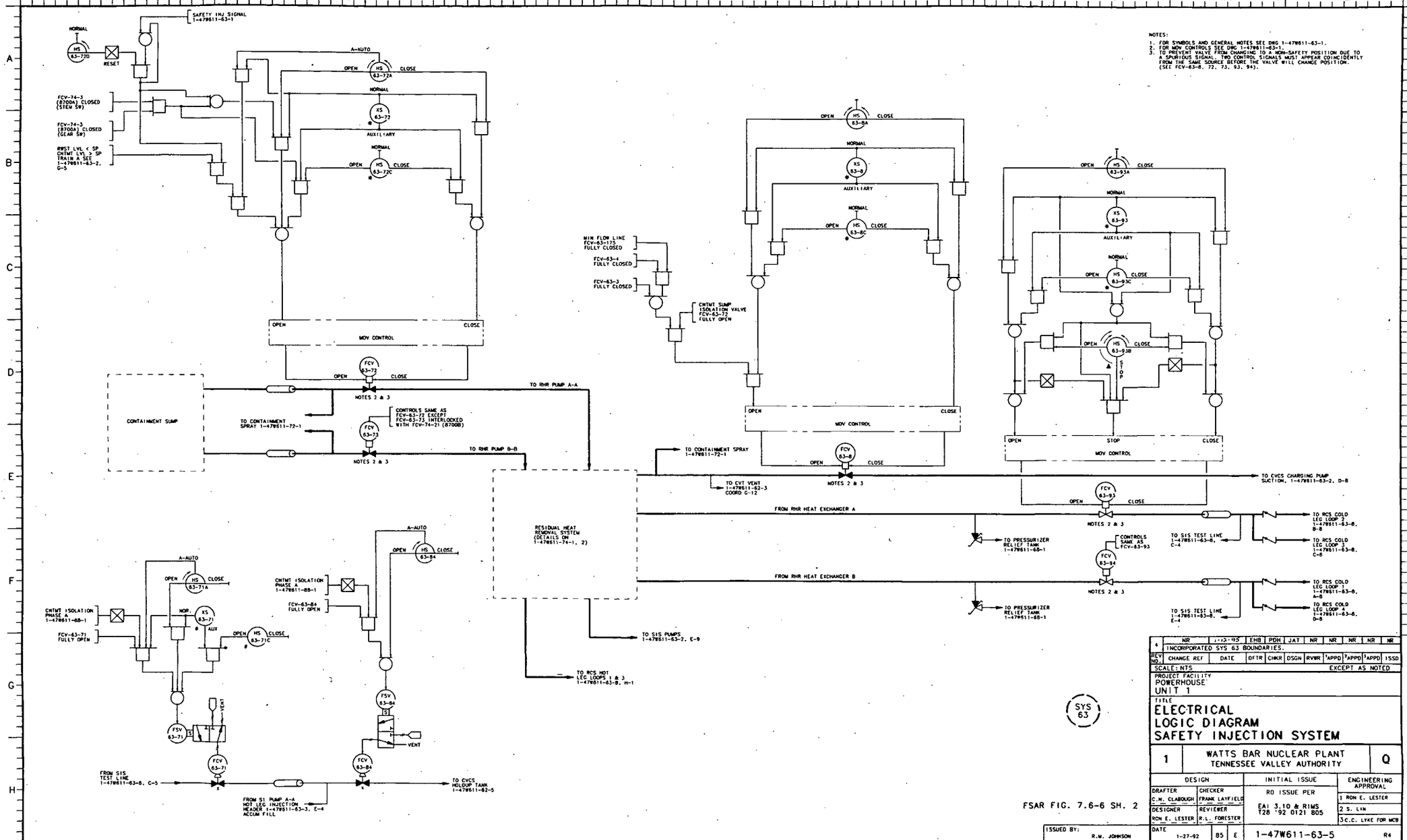

NOTES:
1. FOR SYMBOLS AND GENERAL NOTES SEE DRG 1-47W611-63-1.
2. FOR MOV CONTROLS SEE DRG 1-47W611-63-1.
3. TO PREVENT VALVE FROM CHANGING TO A NON-SAFETY POSITION DUE TO A SPURIOUS SIGNAL, TWO CONTROL SIGNALS MUST APPEAR COINCIDENTLY FROM THE SAME SOURCE BEFORE THE VALVE WILL CHANGE POSITION. (SEE FCV-63-8, 72, 73, 93, 94).

FSAR FIG. 7.6-6 SH. 2

REV NO.	CHANGE REF	DATE	DFTR	CHKR	DSGN	RVWR	1APPD	2APPD	3APPD	ISSD
4	NR	1-13-95	EHB	PDH	JAT	NR	NR	NR	NR	NR
	INCORPORATED SYS 63 BOUNDARIES.									

SCALE: NTS — EXCEPT AS NOTED

PROJECT FACILITY
POWERHOUSE
UNIT 1

TITLE
ELECTRICAL LOGIC DIAGRAM SAFETY INJECTION SYSTEM

1 — WATTS BAR NUCLEAR PLANT, TENNESSEE VALLEY AUTHORITY — Q

DESIGN		INITIAL ISSUE	ENGINEERING APPROVAL
DRAFTER C.N. CLABOUGH	CHECKER FRANK LAYFIELD	RO ISSUE PER EAI 3.10 & RIMS T28 '92 0121 805	1 RON E. LESTER
DESIGNER RON E. LESTER	REVIEWER R.L. FORESTER		2 S. LIN
			3 C.C. LYKE FOR MCB

DATE 1-27-92 | 85 | E | 1-47W611-63-5 | R4

ISSUED BY: R.M. JOHNSON

PRINTS REQ'D R ___ PRINT SIZE F — BR OR PROJ AB CE EE ME MC FE HE SE TE BL BF WB SO — PRINT SIZE H — BR OR PROJ AB CE EE ME MC FE HE SE TE BL BF WB SO

PROCADAM MAINTAINED DRAWING
THIS CONFIGURATION CONTROL DRAWING IS MAINTAINED BY THE WBN CAD UNIT AND IS NOT PART OF THE TVA PROCADAM DATABASE
DOCKET NO. 50-390

CONFIGURATION CONTROL DRAWING

NOTES:
1. FOR SYMBOLS AND GENERAL NOTES SEE 1-47W611-63-1.
2. FOR MOV CONTROL SEE 1-47W611-63-1.
3. TO PREVENT VALVE FROM CHANGING TO A NON-SAFETY POSITION DUE TO A SPURIOUS SIGNAL, TWO CONTROL SIGNALS MUST APPEAR COINCIDENTLY FROM THE SAME SOURCE BEFORE THE VALVE WILL CHANGE POSITIONS. (SEE VALVES FCV-63-80, 98, 118).

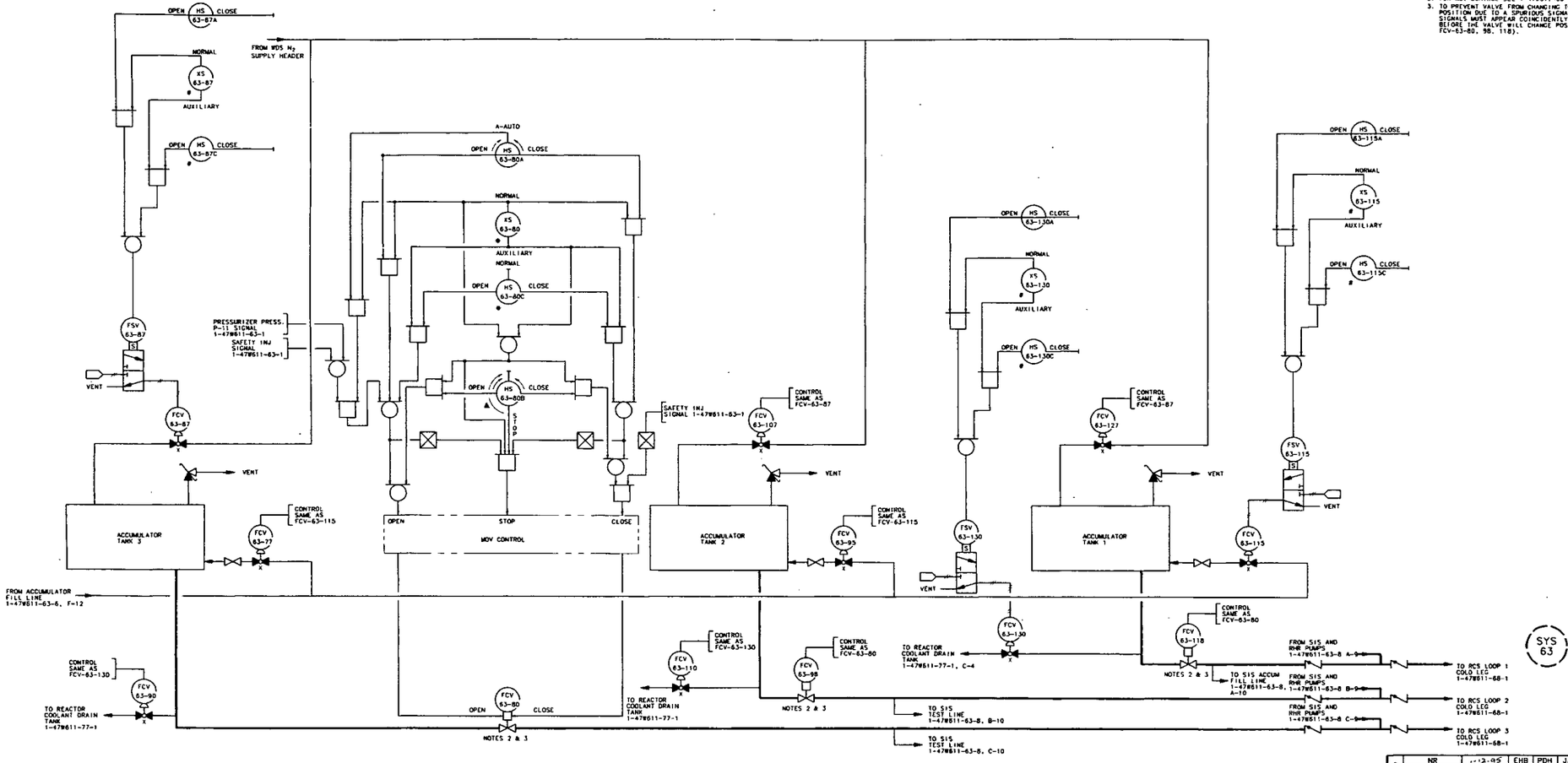

FSAR FIG. 7.6-3

REV NO.	CHANGE REF	DATE	DFTR	CHKR	DSGN	RVWR	1APPD	2APPD	3APPD	ISSD
2	NR	--12-95	EHB	PDH	JAT	NR	NR	NR	NR	NR
	INCORPORATED SYS 63 BOUNDARIES.									

SCALE: NTS — EXCEPT AS NOTED

PROJECT FACILITY
POWERHOUSE
UNIT 1

TITLE
ELECTRICAL LOGIC DIAGRAM SAFETY INJECTION SYSTEM

1 — WATTS BAR NUCLEAR PLANT, TENNESSEE VALLEY AUTHORITY — Q

DESIGN		INITIAL ISSUE	ENGINEERING APPROVAL
DRAFTER: MIKE BALES	CHECKER: FRANK LAYFIELD	RO ISSUE PER EAI 3.10 & RIMS NO. T28 920121 805	1 ROM E. LESTER
DESIGNER: ROM E. LESTER	REVIEWER: R.L. FORESTER		2 S. LIN
			3 C.C. LYKE FOR MCB

ISSUED BY: R.M. JOHNSON — DATE 1-27-92 — 85 — E — 1-47W611-63-7 — R2

PRINTS REQ'D R — PRINT SIZE F — BR OP PROJ AB CE EE ME MC PE MC SE TE BL BF WB SO — PRINT SIZE H — BR OP PROJ AB CE EE ME MC PE MC SE TE BL BF WB SO

PROCADAM MAINTAINED DRAWING
THIS CONFIGURATION CONTROL DRAWING IS MAINTAINED BY THE WBN CAD UNIT AND IS NOW PART OF THE TVA PROCADAM DATABASE

CONFIGURATION CONTROL DRAWING

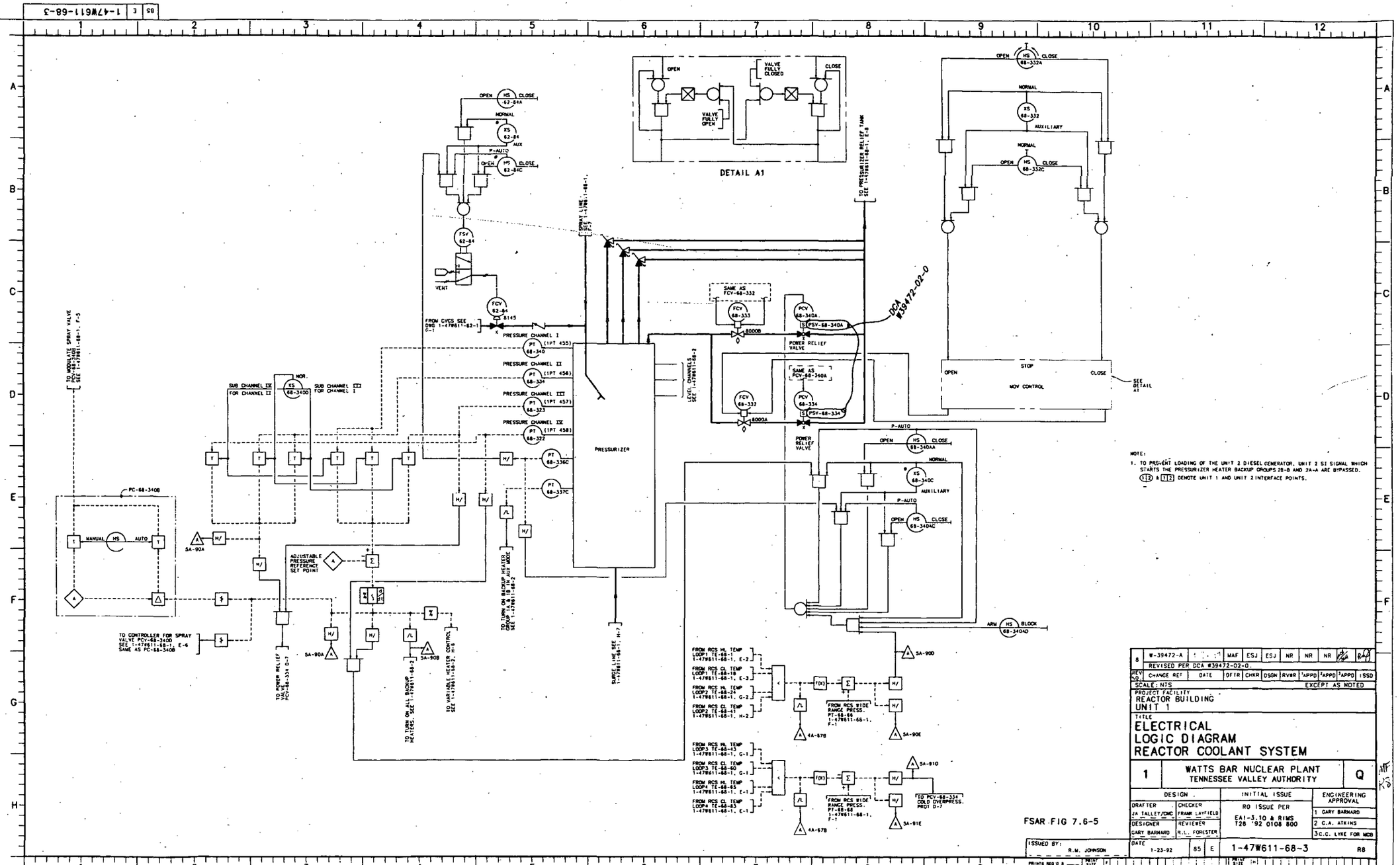
DETAIL A1
VALVE FULLY OPEN
VALVE FULLY CLOSED
OPEN
CLOSE
PRESSURIZER
PRESSURE CHANNEL I
PRESSURE CHANNEL II
PRESSURE CHANNEL III
PRESSURE CHANNEL IV
SUB CHANNEL IV FOR CHANNEL II
SUB CHANNEL III FOR CHANNEL I
POWER RELIEF VALVE
MOV CONTROL
STOP
SEE DETAIL A1
TO PRESSURIZER RELIEF TANK SEE 1-47W611-68-1, E-8
TO MODULATE SPRAY VALVE PCV-68-340 SEE 1-47W611-68-1, F-5
PC-68-340B
MANUAL
AUTO
ADJUSTABLE PRESSURE REFERENCE SET POINT
TO CONTROLLER FOR SPRAY VALVE PCV-68-340D SEE 1-47W611-68-1, E-6 SAME AS PC-68-340B
TO POWER RELIEF VALVE PCV-68-334 D-7
TO TURN ON ALL BACKUP HEATERS SEE 1-47W611-68-2
TO VARIABLE HEATER CONTROL SEE 1-47W611-68-2, H-6
TO TURN ON BACKUP HEATER GROUPS 2A-A AND 2B-B SEE 1-47W611-68-2
SURGE LINE SEE 1-47W611-68-1, H-7
SPRAY LINE SEE 1-47W611-68-1
LEVEL CHANNELS SEE 1-47W611-68-2
FROM CVCS SEE DWG 1-47W611-62-1 G-1
SAME AS FCV-68-332
SAME AS PCV-68-340A
DCA #39472-02-0
FROM RCS HL TEMP LOOP1 TE-68-1, 1-47W611-68-1, E-2
FROM RCS CL TEMP LOOP1 TE-68-18, 1-47W611-68-1, E-3
FROM RCS HL TEMP LOOP2 TE-68-24, 1-47W611-68-1, G-2
FROM RCS CL TEMP LOOP2 TE-68-41, 1-47W611-68-1, H-2
FROM RCS HL TEMP LOOP3 TE-68-43, 1-47W611-68-1, G-1
FROM RCS CL TEMP LOOP3 TE-68-60, 1-47W611-68-1, G-1
FROM RCS HL TEMP LOOP4 TE-68-65, 1-47W611-68-1, E-1
FROM RCS CL TEMP LOOP4 TE-68-83, 1-47W611-68-1, E-1
FROM RCS WIDE RANGE PRESS. PT-68-66, 1-47W611-68-1, F-1
FROM RCS WIDE RANGE PRESS. PT-68-64, 1-47W611-68-1, F-1
TO PCV-68-334 COLD OVERPRESS. PROT D-7
ARM HS BLOCK 68-340AD
NOTE:
1. TO PREVENT LOADING OF THE UNIT 2 DIESEL GENERATOR, UNIT 2 S2 SIGNAL WHICH STARTS THE PRESSURIZER HEATER BACKUP GROUPS 2B-B AND 2A-A ARE BYPASSED.
12 & 12 DENOTE UNIT 1 AND UNIT 2 INTERFACE POINTS.
FSAR FIG 7.6-5
ISSUED BY: R.M. JOHNSON
REVISED PER DCA #39472-02-0.
SCALE: NTS
EXCEPT AS NOTED
PROJECT FACILITY
REACTOR BUILDING
UNIT 1
TITLE
ELECTRICAL
LOGIC DIAGRAM
REACTOR COOLANT SYSTEM
WATTS BAR NUCLEAR PLANT
TENNESSEE VALLEY AUTHORITY
DESIGN
DRAFTER JA TALLEY/CMC
DESIGNER GARY BARNARD
CHECKER FRANK LAYFIELD
REVIEWER R.L. FORESTER
INITIAL ISSUE
RO ISSUE PER EAI-3.10 & RIMS T26 '92 0108 800
ENGINEERING APPROVAL
1 GARY BARNARD
2 C.A. ATKINS
3 C.C. LYKE FOR MCB
DATE 1-23-92
1-47W611-68-3
R8
PROCADAM MAINTAINED DRAWING
THIS CONFIGURATION CONTROL DRAWING IS MAINTAINED BY THE CAD UNIT AND IS NOW PART OF THE TVA PROCADAM DATABASE

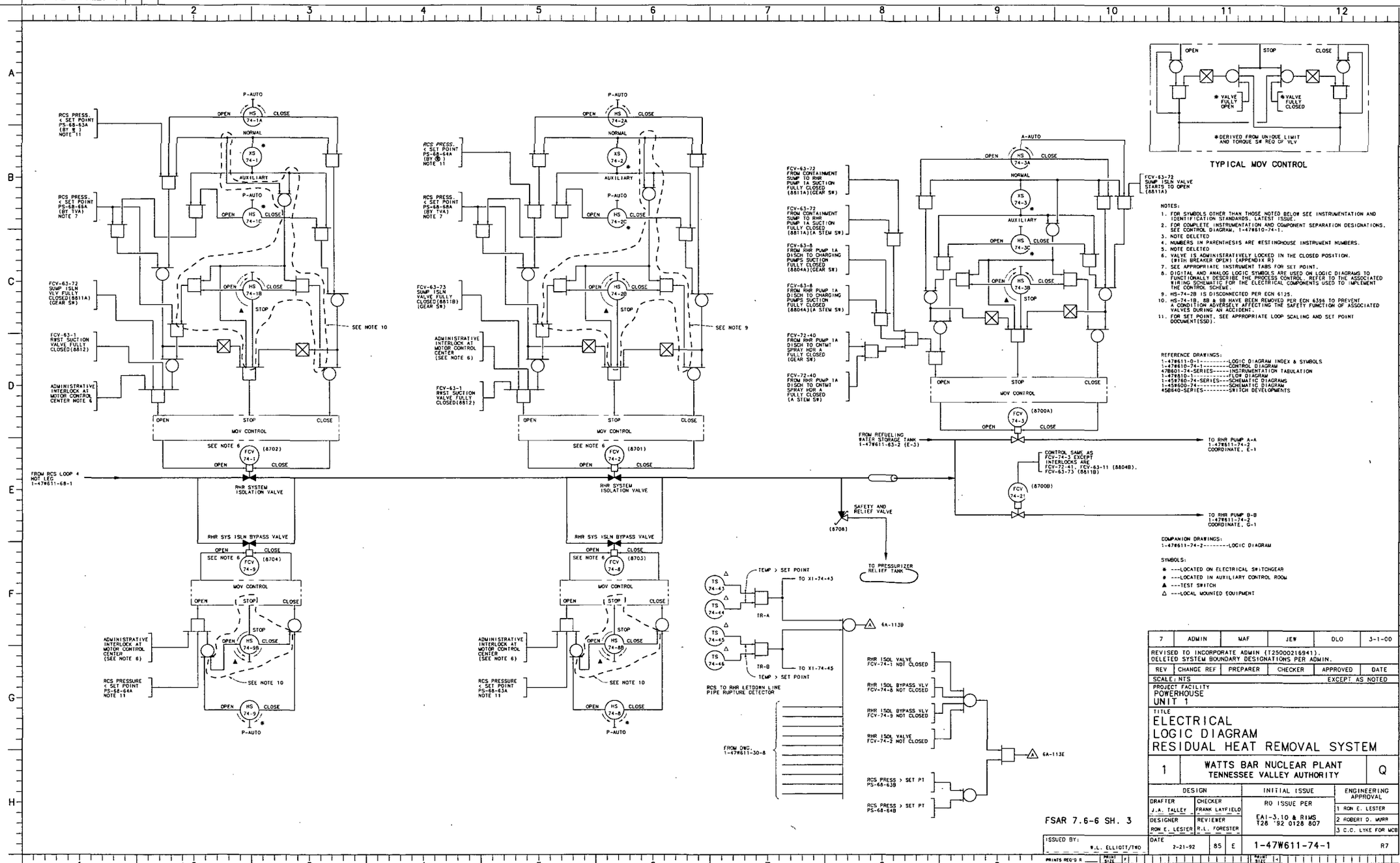

7	ADMIN	MAF	JEW	DLO	3-1-00

REVISED TO INCORPORATE ADMIN (T25000216941).
DELETED SYSTEM BOUNDARY DESIGNATIONS PER ADMIN.

REV	CHANGE REF	PREPARER	CHECKER	APPROVED	DATE

SCALE: NTS — EXCEPT AS NOTED

PROJECT FACILITY
POWERHOUSE
UNIT 1

TITLE
ELECTRICAL
LOGIC DIAGRAM
RESIDUAL HEAT REMOVAL SYSTEM

1 — WATTS BAR NUCLEAR PLANT — TENNESSEE VALLEY AUTHORITY — Q

DESIGN		INITIAL ISSUE	ENGINEERING APPROVAL
DRAFTER J.A. TALLEY	CHECKER FRANK LAYFIELD	RO ISSUE PER EAI-3.10 & RIMS T28 '92 0128 807	1 RON E. LESTER
DESIGNER RON E. LESTER	REVIEWER R.L. FORESTER		2 ROBERT D. MARR
			3 C.C. LYKE FOR WCB

DATE 2-21-92 | 85 | E | 1-47W611-74-1 | R7

ISSUED BY: W.L. ELLIOTT/TWO

PRINTS REQ'D R ___ PRINT SIZE F SR OR PROJ AD CE EE ME NE TE HE SE TE BL BF FS SO

PROCADAM MAINTAINED DRAWING
THIS CONFIGURATION CONTROL DRAWING IS MAINTAINED BY THE WBN CAD UNIT AND IS NOW PART OF THE TVA PROCADAM DATABASE.

CONFIGURATION CONTROL DRAWING

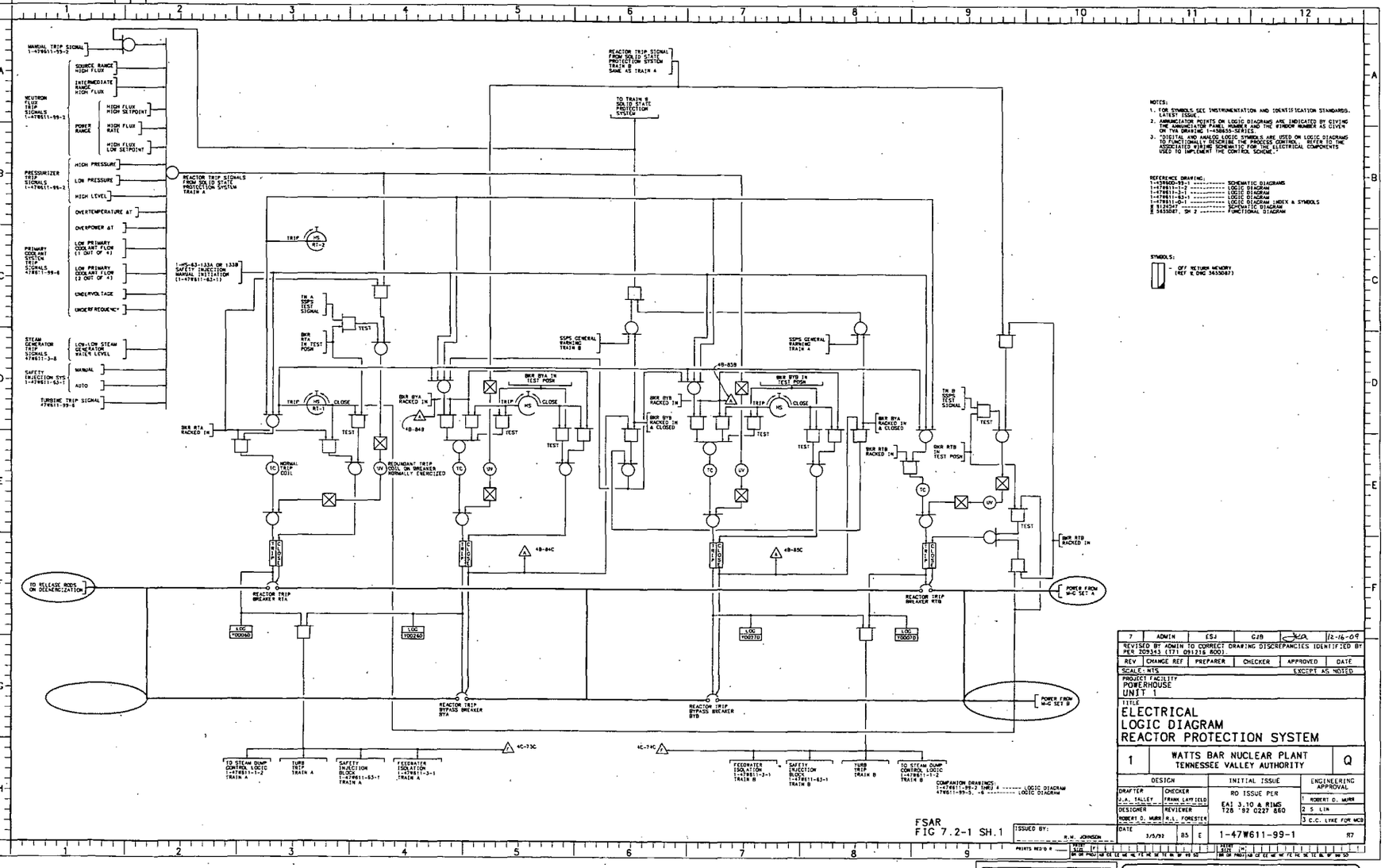
MANUAL TRIP SIGNAL 1-47W611-99-2
NEUTRON FLUX TRIP SIGNALS 1-47W611-99-2
SOURCE RANGE HIGH FLUX
INTERMEDIATE RANGE HIGH FLUX
POWER RANGE
HIGH FLUX HIGH SETPOINT
HIGH FLUX RATE
HIGH FLUX LOW SETPOINT
PRESSURIZER TRIP SIGNALS 1-47W611-99-2
HIGH PRESSURE
LOW PRESSURE
HIGH LEVEL
PRIMARY COOLANT SYSTEM TRIP SIGNALS 47W611-99-6
OVERTEMPERATURE ΔT
OVERPOWER ΔT
LOW PRIMARY COOLANT FLOW (1 OUT OF 4)
LOW PRIMARY COOLANT FLOW (2 OUT OF 4)
UNDERVOLTAGE
UNDERFREQUENCY
STEAM GENERATOR TRIP SIGNALS 47W611-3-8
LOW-LOW STEAM GENERATOR WATER LEVEL
SAFETY INJECTION SYS. 1-47W611-63-1
MANUAL
AUTO
TURBINE TRIP SIGNAL 47W611-99-6
REACTOR TRIP SIGNALS FROM SOLID STATE PROTECTION SYSTEM TRAIN A
REACTOR TRIP SIGNAL FROM SOLID STATE PROTECTION SYSTEM TRAIN B SAME AS TRAIN A
TO TRAIN B SOLID STATE PROTECTION SYSTEM
1-PS-63-133A OR 133B SAFETY INJECTION MANUAL INITIATION (1-47W611-63-1)
TRIP
HS RT-2
TRN A SSPS TEST SIGNAL
TEST
BKR RTA IN TEST POSN
SSPS GENERAL WARNING TRAIN B
SSPS GENERAL WARNING TRAIN A
BKR BYA IN TEST POSN
BKR BYB IN TEST POSN
BKR BYA RACKED IN
BKR BYB RACKED IN
BKR BYB RACKED IN & CLOSED
BKR BYA RACKED IN & CLOSED
BKR RTB RACKED IN
BKR RTB IN TEST POSN
TRN B SSPS TEST SIGNAL
BKR RTA RACKED IN
HS RT-1
CLOSE
TC
NORMAL TRIP COIL
UV
REDUNDANT TRIP COIL ON BREAKER NORMALLY ENERGIZED
BKR RTB RACKED IN
TO RELEASE RODS ON DEENERGIZATION
REACTOR TRIP BREAKER RTA
REACTOR TRIP BREAKER RTB
POWER FROM M-G SET A
POWER FROM M-G SET B
REACTOR TRIP BYPASS BREAKER BYA
REACTOR TRIP BYPASS BREAKER BYB
LOG Y00060
LOG Y00240
LOG Y00070
LOG Y00070
TO STEAM DUMP CONTROL LOGIC 1-47W611-1-2 TRAIN A
TURB TRIP TRAIN A
SAFETY INJECTION BLOCK 1-47W611-63-1 TRAIN A
FEEDWATER ISOLATION 1-47W611-3-1 TRAIN A
FEEDWATER ISOLATION 1-47W611-3-1 TRAIN B
SAFETY INJECTION BLOCK 1-47W611-63-1 TRAIN B
TURB TRIP TRAIN B
TO STEAM DUMP CONTROL LOGIC 1-47W611-1-2 TRAIN B
COMPANION DRAWINGS:
1-47W611-99-2 THRU 6 -------- LOGIC DIAGRAM
47W611-99-5, -6 --------- LOGIC DIAGRAM
NOTES:
1. FOR SYMBOLS SEE INSTRUMENTATION AND IDENTIFICATION STANDARDS, LATEST ISSUE.
2. ANNUNCIATOR POINTS ON LOGIC DIAGRAMS ARE INDICATED BY GIVING THE ANNUNCIATOR PANEL NOUN AND THE WINDOW NUMBER AS GIVEN ON TVA DRAWING 1-45B655-SERIES.
3. "DIGITAL AND ANALOG LOGIC SYMBOLS ARE USED ON LOGIC DIAGRAMS ONLY. THEY DO NOT REFER TO ELECTRICAL COMPONENTS RIVEN TO THE ASSOCIATED WITH SCHEMATIC FOR THE ELECTRICAL COMPONENTS USED TO IMPLEMENT THE CONTROL SCHEME.
REFERENCE DRAWING:
1-45B600-99-1 ---------- SCHEMATIC DIAGRAMS
1-47W611-1-2 ---------- LOGIC DIAGRAM
1-47W611-3-1 ---------- LOGIC DIAGRAM
1-47W611-5-1 ---------- LOGIC DIAGRAM
1-47W611-0-1 ---------- LOGIC DIAGRAM INDEX & SYMBOLS
E 5124247 ---------- SCHEMATIC DIAGRAM
E 5633087, SH 2 ---------- FUNCTIONAL DIAGRAM
SYMBOLS:
- OFF RETURN MEMORY (REF E DWG 5633087)
FSAR FIG 7.2-1 SH.1
ISSUED BY:
R.W. JOHNSON
PRINTS REQ'D #
7 ADMIN ESJ GJB 12-16-09
REVISED BY ADMIN TO CORRECT DRAWING DISCREPANCIES IDENTIFIED BY PER 209343 (T7) 091216 800)
REV CHANGE REF PREPARER CHECKER APPROVED DATE
SCALE: NTS
EXCEPT AS NOTED
PROJECT FACILITY
POWERHOUSE
UNIT 1
TITLE
ELECTRICAL
LOGIC DIAGRAM
REACTOR PROTECTION SYSTEM
1
WATTS BAR NUCLEAR PLANT
TENNESSEE VALLEY AUTHORITY
Q
DESIGN
DRAFTER J.A. TALLEY
CHECKER FRANK LAYFIELD
DESIGNER ROBERT D. MURR
REVIEWER R.L. FORESTER
INITIAL ISSUE
RO ISSUE PER
EAI 3.10 & RIMS
T28 '92 0227 880
ENGINEERING APPROVAL
1 ROBERT D. MURR
2 S. LIN
3 C.C. LYKE FOR MCB
DATE 3/5/92 B5 E 1-47W611-99-1 R7
CAD MAINTAINED DRAWING
CONFIGURATION CONTROL DRAWING

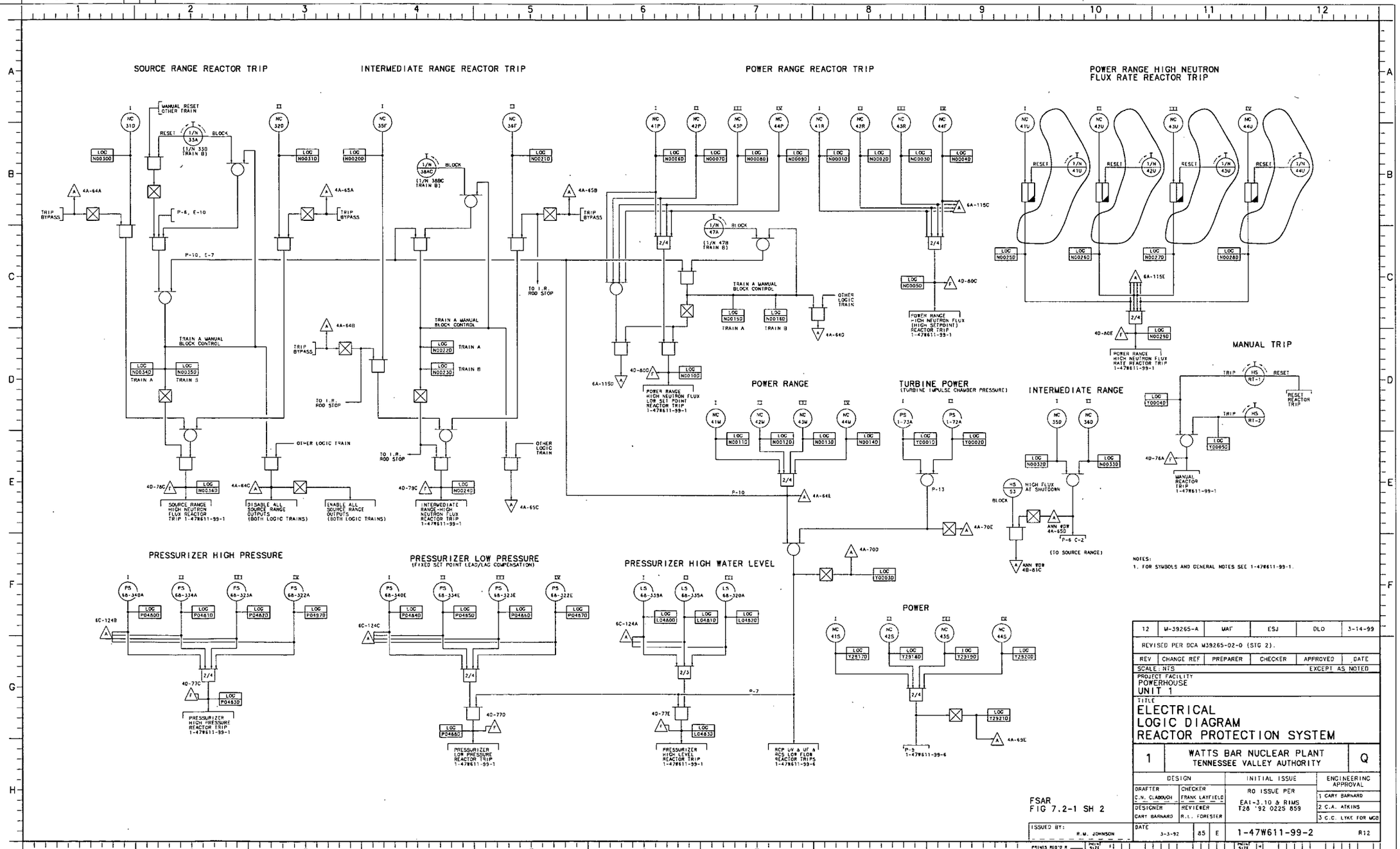

FSAR FIG 7.2-1 SH 2

REV	CHANGE REF	PREPARER	CHECKER	APPROVED	DATE
12	M-39265-A	MAF	ESJ	DLO	3-14-99

REVISED PER DCA M39265-02-0 (STG 2).

SCALE: NTS — EXCEPT AS NOTED

PROJECT FACILITY: POWERHOUSE UNIT 1

TITLE: ELECTRICAL LOGIC DIAGRAM REACTOR PROTECTION SYSTEM

1 — WATTS BAR NUCLEAR PLANT, TENNESSEE VALLEY AUTHORITY — Q

DESIGN		INITIAL ISSUE	ENGINEERING APPROVAL
DRAFTER C.N. CLABOUGH	CHECKER FRANK LAYFIELD	RO ISSUE PER EAI-3.10 & RIMS T26 '92 0225 859	1 GARY BARNARD
DESIGNER GARY BARNARD	REVIEWER R.L. FORESTER		2 C.A. ATKINS
			3 C.C. LYKE FOR MCB

ISSUED BY: R.M. JOHNSON — DATE 3-3-92 — 85 E — 1-47W611-99-2 — R12

PROCADAM MAINTAINED DRAWING — THIS CONFIGURATION CONTROL DRAWING IS MAINTAINED BY THE WBN CAD UNIT AND IS NOW PART OF THE TVA PROCADAM DATABASE

CONFIGURATION CONTROL DRAWING

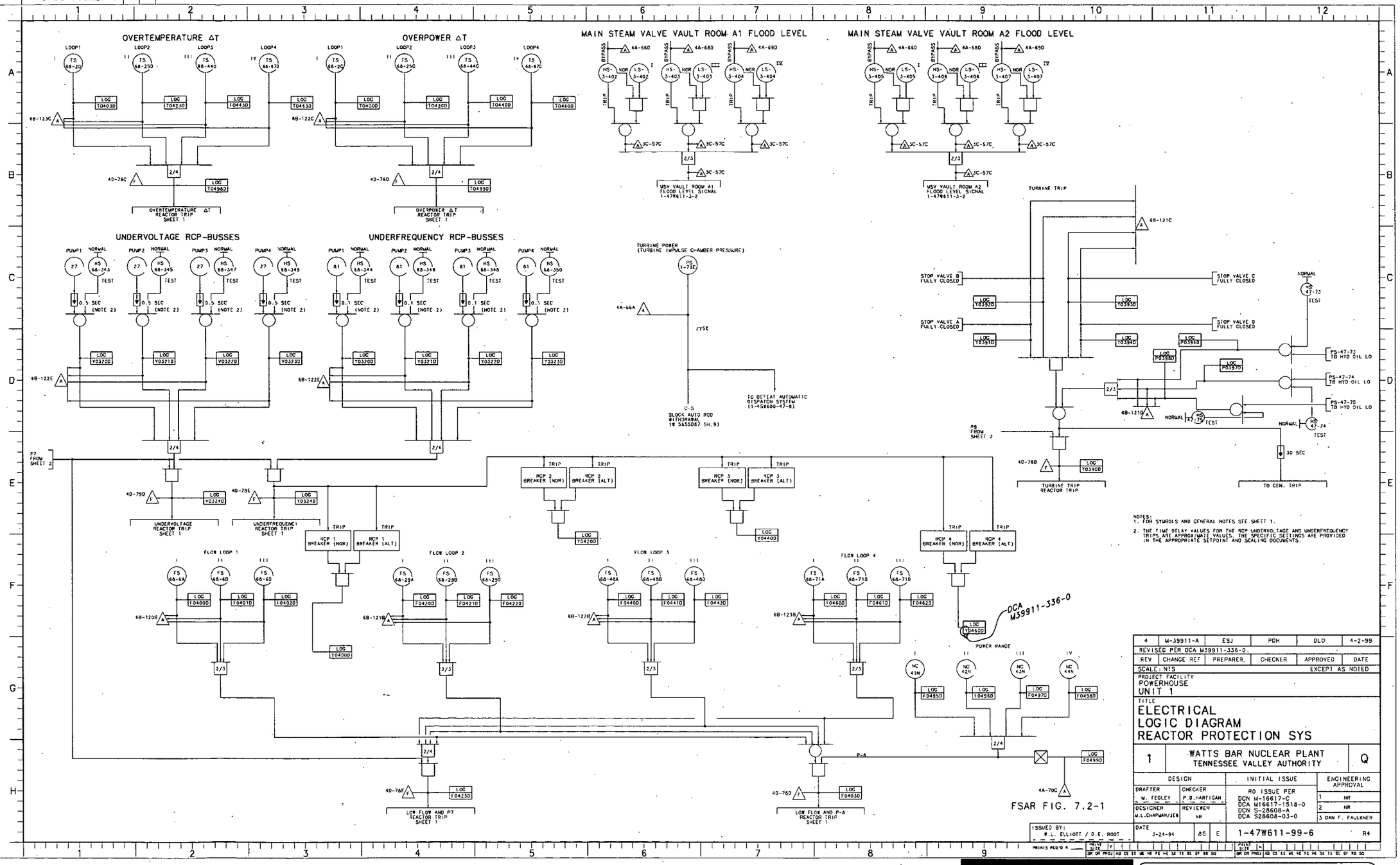

NOTES:
1. FOR SYMBOLS AND GENERAL NOTES SEE SHEET 1.
2. THE TIME DELAY VALUES FOR THE RCP UNDERVOLTAGE AND UNDERFREQUENCY TRIPS ARE APPROXIMATE VALUES. THE SPECIFIC SETTINGS ARE PROVIDED IN THE APPROPRIATE SETPOINT AND SCALING DOCUMENTS.

REV	CHANGE REF	PREPARER	CHECKER	APPROVED	DATE
4	M-39911-A	ESJ	PDH	DLO	4-2-99

REVISED PER DCA M39911-336-0.

SCALE: NTS — EXCEPT AS NOTED

PROJECT FACILITY
POWERHOUSE
UNIT 1

TITLE
ELECTRICAL
LOGIC DIAGRAM
REACTOR PROTECTION SYS

1 — WATTS BAR NUCLEAR PLANT, TENNESSEE VALLEY AUTHORITY — Q

DESIGN		INITIAL ISSUE	ENGINEERING APPROVAL
DRAFTER W. FEGLEY	CHECKER P.D.HARTIGAN	RO ISSUE PER DCN M-16617-C, DCA M16617-1518-0, DCN S-28608-A, DCA S28608-03-0	1 NR
DESIGNER W.L.CHAPMAN/JEB	REVIEWER NR		2 NR
			3 DAN F. FAULKNER

ISSUED BY: W.L. ELLIOTT / D.E. ROOT

DATE 3-24-94 | 85 | E | 1-47W611-99-6 | R4

PRINTS REQ'D 8

PROCADAM MAINTAINED DRAWING
THIS CONFIGURATION CONTROL DRAWING IS MAINTAINED BY THE WBN CAD UNIT AND IS NOW PART OF THE TVA PROCADAM DATABASE

CONFIGURATION CONTROL DRAWING

PROCADAM MAINTAINED DRAWING
THIS DRAWING IS MAINTAINED BY PROCADAM. ANY MANUAL CHANGES TO THIS DRAWING ARE NOT PART OF THE TVA DRAWING DATABASE.

CODE	SYSTEM	CODE	SYSTEM	CODE	SYSTEM
0	INDEX, NP STYLES, MIMICS, MISC EQUIP., & LOCAL PANELS	34		67	ESSENTIAL RAW COOLING WATER SYSTEM
1	MAIN STEAM SYSTEM	35	GENERATOR COOLING SYSTEMS	68	REACTOR COOLANT SYSTEM
2	CONDENSATE SYSTEM	36	FW SECONDARY TREATMENT SYSTEM	69	
3	MAIN AND AUXILIARY FEEDWATER SYSTEM	37	GLAND SEAL WATER SYSTEM	70	COMPONENT COOLING SYSTEM
4		38	INSULATION OIL SYSTEM	71	
5	EXTRACTION STEAM SYSTEMS	39	CO_2 STORAGE, FIRE PROTECTION & PURGING SYSTEM	72	CONTAINMENT SPRAY SYSTEM
6	HEATER DRAINS & VENTS SYSTEM	40	STATION DRAINAGE SYSTEM	73	
7	TURBINE EXTRACTION TRAPS & DRAINS SYSTEM	41	LAYUP WATER TREATMENT SYSTEM	74	RESIDUAL HEAT REMOVAL SYSTEM
8	MISCELLANEOUS TURBINE CONNECTIONS	42	CHEMICAL CLEANING SYSTEM	75	
9	MISCELLANEOUS TURBINE VENTS SYSTEM	43	SAMPLING & WATER QUALITY SYSTEM	76	VOLUME REDUCTION AND SOLIDIFICATION SYSTEM
10		44	BUILDING HEATING SYSTEM	77	WASTE DISPOSAL SYSTEM
11		45		78	SPENT FUEL PIT COOLING SYSTEM
12	AUXILIARY BOILER SYSTEM	46	FEEDWATER CONTROL SYSTEM	79	FUEL HANDLING AND STORAGE SYSTEM
13	FIRE DETECTION SYSTEM	47	TURBOGENERATOR CONTROL SYSTEM	80	PRIMARY CONTAINMENT COOLING SYSTEM
14	CONDENSATE DEMINERALIZER SYSTEM	48		81	PRIMARY MAKEUP WATER SYSTEM
15	STEAM GEN. BLOWDOWN SYSTEM	49	BREATHING AIR SYSTEM	82	STANDBY DIESEL GENERATOR SYSTEM
16		50	HYPERCHLORITE SYSTEM	83	HYDROGEN RECOMBINATION SYSTEMS
17		51		84	FLOOD MODE BORATION MAKEUP SYSTEM
18	FUEL OIL SYSTEM	52	SYSTEM TEST FACILITY (INSTRUMENTATION)	85	CONTROL ROD DRIVE SYSTEM
19		53		86	
20	CENTRAL LUBRICATING OIL SYSTEM	54	INJECTION WATER SYSTEM	87	UPPER HEAD INJECTION SYSTEM
21		55	ANNUNCIATOR & SEQUENTIAL EVENTS RECORDING SYSTEM	88	CONTAINMENT ISOLATION SYSTEM
22		56	TEMPERATURE MONITORING SYTEM	89	
23		57	ASSOCIATED ELECTRICAL SYSTEMS	90	RADIATION MONITORING SYSTEM
24	RAW COOLING WATER SYSTEM	58	GENERATOR BUS COOLING SYSTEM	91	
25	RAW SERVICE WATER SYSTEM	59	DEMIN WATER & CASK DECON SYS	92	NEUTRON MONITORING SYSTEM
26	HIGH-PRESSURE FIRE-PROTECTION SYSTEM	60		93	
27	CONDENSER CIRCULATING WATER SYSTEM	61	ICE CONDENSER SYTEM	94	IN-CORE FLUX DETECTORS
28	WATER-TREATMENT SYSTEM	62	CHEMICAL & VOLUME CONTROL SYSTEM	95	
29	POTABLE (TREATED) WATER DISTRIBUATION SYSTEM	63	SAFETY INJECTION SYSTEM	96	
30	VENTILATING SYSTEM	64		97	
31	AIR CONDITIONING (COOLING-HEATING) SYSTEM	65	EMERGENCY GAS TREATMENT SYSTEM	98	
32	CONTROL AIR SYSTEM	66		99	REACTOR PROTECTION SYSTEM
33	SERVICE AIR SYSTEM				

WATTS BAR NUCLEAR PLANT
UNIT 1

ADMIN

REV	CHANGE REF	PREPARER	CHECKER	APPROVED	DATE
8	ADMIN	TDK	PDH	DW	12-17-98

DELETED NOTE 1, TABLE II REFERENCE, AND UNIT 2 REFERENCE PER ADMIN (T25981201846).

(THIS DRAWING SUPERSEDES 30H617-2R2.)

INSTRUMENTATION SYMBOLS

MECHANICAL SYSTEM IDENTIFICATION NUMBERS

WATTS BAR NUCLEAR PLANT
TENNESSEE VALLEY AUTHORITY
DIVISION OF ENGINEERING DESIGN

KNOXVILLE | 10-13-71 | 85 | M | 4 | 30B617-2D

R8

ENCLOSURE 1

Responses To Licensee Open Items To Be Resolved For SER Approval

ATTACHMENT 3

(This Attachment contained on the OSM)

Revised Common Q PAMS ISG-6 Compliance Matrix

Watts Bar 2 – Common Q PAMS ISG-6 Compliance Matrix

	ISG-6 Document (Draft dated Feb/12/2010)	WEC Equivalent Document	WEC Document Number	TVA Submittal (S) or Available for Audit (A)	Non-Prop Rqr'd (Y/N)	Target Submittal Date (WEC to TVA)	Proprietary Issued Date / Letter	Application for Withholding Issued Date / Letter	Non-Prop Issued, Date / Letter or Forecast (F)
1	Commercial Grade Dedication Plan	Common Q Topical Report (Section 11) *Approved in SER ML003740165 (P. 4, "The staff made several visits to the CENP sites in Windsor, Connecticut and Rockville, Maryland. During the site visits, the staff inspected CENP procedures that are referenced in the topical report and audited reports of commercial-grade dedication activities." P. 36, "However, during a visit to a CENP site, the staff did audit a sampling of CENP's manuals for CGD activities. On the basis of the audit, the staff finds that the procedures and processes in the manuals correspond to the requirements of IEEE 7-4.3.2 and the guidance of EPRI TR-106439 and, therefore, provide an acceptable program for the dedication of commercial-grade items.")*	ML050350234	N/A	N/A	DONE	Approved Topical Report	Approved Topical Report	Approved Topical Report
2	D3 Analysis	WB2 PAMS D3 Analysis *This will addressed in Plant Specific Action Item PSAI-6.11 in the Technical Report*	Technical Report: WNA-LI-00058-WBT, Rev 0	S	Y	TVA Action	WBT-D-1800 April 6, 2010	WBT-D-1800 April 6, 2010	June 30, 2010 (F)
3	Design Report on Computer Integrity, Test and Calibration, and Fault Detection	Common Q Topical Report (Sections 6.4 and 9) *This citation in the Common Q Topical Report applies to the platform. For system test and calibration and fault detection the following documents apply:* *1. WNA-DS-01667-WBT, Watts Bar 2 PAMS System Design Specification* *2. WNA-DS-01617-WBT, Watts Bar 2 PAMS specific System Requirements Specification*	ML050350234	N/A	N/A	DONE	Approved Topical Report	Approved Topical Report	Approved Topical Report
4	Theory of Operation Description	Common Q Topical Report (Sections 6.2 and 6.3) *This citation in the Common Q Topical Report applies to the platform. For system theory of operation description the following documents apply.* *1. WNA-DS-01667-WBT, Watts Bar 2 PAMS System Design Specification* *2. WNA-DS-01617-WBT, Watts Bar 2 PAMS specific System Requirements Specification*	ML050350234	N/A	N/A	DONE	Approved Topical Report	Approved Topical Report	Approved Topical Report
5	EQ Testing Plans	Common Q Topical Report (Section 8) *The Common Q equipment was qualified according to the plan specified in the Common Q Topical Report. All EQ activities were ultimately approved by the NRC. Any open items on equipment qualification were identified as Plant Specific Action Items.*	ML050350234	N/A	N/A	DONE	Approved Topical Report	Approved Topical Report	Approved Topical Report
6	SQA Plans and Procedures	Common Q Software Program Manual (Section 4) *SER: "On the basis of the foregoing review of CENP's software development process for application software, the staff concludes that the SPM specifies plans that will provide a quality software life cycle process, and that these plans commit to documentation of life cycle activities that will permit the staff or others to evaluate the quality of the design features upon which the safety determination will be based."*	ML050350234	N/A	N/A	DONE	Approved Topical Report	Approved Topical Report	Approved Topical Report

Watts Bar 2 – Common Q PAMS ISG-6 Compliance Matrix

	ISG-6 Document (Draft dated Feb/12/2010)	WEC Equivalent Document	WEC Document Number	TVA Submittal (S) or Available for Audit (A)	Non-Prop Rqr'd (Y/N)	Target Submittal Date (WEC to TVA)	Proprietary Issued Date / Letter	Application for Withholding Issued Date / Letter	Non-Prop Issued, Date / Letter or Forecast (F)
7	System Description to Block Diagram Level	Watts Bar 2 PAMS System Design Specification	WNA-DS-01667-WBT, Rev. 1	S	**Y**	**TVA Action**	WBT-D-1680 March 3, 2010	WBT-D-1680 March 3, 2010	**June 25, 2010**
8	HW and SW Architecture Descriptions	Watts Bar 2 PAMS System Design Specification and Software Requirements Specification	WNA-DS-01667-WBT, Rev. 1	S	**Y**	**TVA Action**	WBT-D-1680, March 3, 2010	WBT-D-1680 March 3, 2010	**June 25, 2010 (F)**
			WNA-SD-00239-WBT, Rev. 1	S	**Y**	**TVA Action**	WBT-D-1686, March 5, 2010	WBT-D-1786 April 6, 2010	**June 25, 2010 (F)**
9	FMEA	Watts Bar 2 PAMS specific FMEA	WNA-AR-00180-WBT	S	**TVA-TBD**	**8/31/10**			
10	Safety Analysis	N/A • *SPM Safety Plan states, "It applies to all Common Q safety critical software whose failure could result in severe consequences to public health and safety. For Common Q systems, safety critical software is defined as software belonging to the "Protection" class as defined in Section 1."* • *SPM Exhibit 4-1 ASSIGNMENT OF COMMON Q SOFTWARE TO CLASSES, classifies PAMS as Important To Safety.* • *SER states, ""On the basis of the foregoing review of CENP's software development process for application software, the staff concludes that the SPM specifies plans that will provide a quality software life cycle process, and that these plans commit to documentation of life cycle activities that will permit the staff or others to evaluate the quality of the design features upon which the safety determination will be based."*	N/A	**N/A**	**N/A**	**DONE**	**Approved Topical Report**	**Approved Topical Report**	**Approved Topical Report**
11	System Requirements Specification	Watts Bar 2 PAMS specific System Requirements Specification	WNA-DS-01617-WBT, Rev. 1	S	Y	**TVA Action**	WBT-D-1680 March 3, 2010	WBT-D-1680 March 3, 2010	**June 25, 2010**
12	System Test Plan	Testing Process for Common Q Safety Systems	WNA-PT-00058-GEN, Rev. 0	**A**	**N**	**DONE**	**N/A**	**N/A**	**WBT-D-1526, January 28, 2010 Document at W Rockville Office**
13	Software Design Spec	Watts Bar 2 PAMS Software Design Description (two documents, one for flat panel display and one for AC160)	WNA-SD-00248-WBT, Rev. 0 (FPDS) WNA-SD-00250-WBT, Rev. 0 (AC160)	A	N	May 5, 1010 May 12, 2010	N/A	N/A	**WBT-D-1961, May 21,, 2010 Document at W Rockville Office**
14	Software Development Plan	Watts Bar 2 PAMS Software Project Plan	WNA-PD-00073-WBT, Rev. 0	**A**	**N**	**DONE**	**N/A**	**N/A**	**WBT-D-1526, January 28, 2010 Document at W Rockville Office**

Watts Bar 2 – Common Q PAMS ISG-6 Compliance Matrix

	ISG-6 Document (Draft dated Feb/12/2010)	WEC Equivalent Document	WEC Document Number	TVA Submittal (S) or Available for Audit (A)	Non-Prop Rqr'd (Y/N)	Target Submittal Date (WEC to TVA)	Proprietary Issued Date / Letter	Application for Withholding Issued Date / Letter	Non-Prop Issued, Date / Letter or Forecast (F)
15	Software Maintenance Plan	Common Q Software Program Manual (Section 7) *SER: "On the basis of the foregoing review of CENP's software development process for application software, the staff concludes that the SPM specifies plans that will provide a quality software life cycle process, and that these plans commit to documentation of life cycle activities that will permit the staff or others to evaluate the quality of the design features upon which the safety determination will be based."*	ML050350234	**N/A**	**N/A**	**DONE**	**Approved Topical Report**	**Approved Topical Report**	**Approved Topical Report**
~~16~~	~~Software Operation Plan~~	~~Watts Bar 2 PAMS Technical Manual~~ (Not required per Feb 12, 2010 ISG-6 draft)	N/A	**N/A**	**N/A**	**DELETED**	**DELETED**	**DELETED**	**DELETED**
17	Application SRS	Watts Bar 2 PAMS Software Requirements Specification	WNA-SD-00239-WBT, Rev. 1	S	Y	TVA Action	WBT-D-1686, March 5, 2010	WBT-D-1786 April 6, 2010	**June 25, 2010**
18	Software Safety Plan	Common Q Software Program Manual (Section 3) • *SPM Safety Plan states, "It applies to all Common Q safety critical software whose failure could result in severe consequences to public health and safety. For Common Q systems, safety critical software is defined as software belonging to the "Protection" class as defined in Section 1."* • *SPM Exhibit 4-1 ASSIGNMENT OF COMMON Q SOFTWARE TO CLASSES, classifies PAMS as Important To Safety.* • *SER states, ""On the basis of the foregoing review of CENP's software development process for application software, the staff concludes that the SPM specifies plans that will provide a quality software life cycle process, and that these plans commit to documentation of life cycle activities that will permit the staff or others to evaluate the quality of the design features upon which the safety determination will be based."*	N/A	**N/A**	**N/A**	**DONE**	**Approved Topical Report**	**Approved Topical Report**	**Approved Topical Report**
19	Software Test Plan	Testing Process for Common Q Safety Systems	WNA-PT-00058-GEN, Rev. 0	**A**	**N**	**DONE**	**N/A**	**N/A**	**WBT-D-1526, January 28, 2010 Document at W Rockville Office**

Watts Bar 2 – Common Q PAMS ISG-6 Compliance Matrix

	ISG-6 Document (Draft dated Feb/12/2010)	WEC Equivalent Document	WEC Document Number	TVA Submittal (S) or Available for Audit (A)	Non-Prop Rqr'd (Y/N)	Target Submittal Date (WEC to TVA)	Proprietary Issued Date / Letter	Application for Withholding Issued Date / Letter	Non-Prop Issued, Date / Letter or Forecast (F)
20	Software Tool Verification Program	1) 00000-ICE-37722, Rev 00, dated November 11, 1999, "Commercial Grade Dedication Report for the QNX Operating System for Common Q Applications"; 2) WNA-CD-00018-GEN, Rev 03, dated October 8, 2008, "Commercial Dedication Report for QNX 4.25G For Common Q Applications"; 3) GWK F 700 778, Rev. 01, dated February 18, 2000, "Generic Operating History Evaluation Report on Previously-Developed Software in ABB AC160, I/O Modules and Tool Software"; 4) GWK F 700 777, Rev. 02, dated February 22, 2000, "Design and Life Cycle Evaluation Report on Previously-Developed Software in ABB AC160, I/O Modules and Tool Software" *Common Q SER ML003740165* *P.2 "As regards to the commercial dedication of the Common Q platform, including the previously* *developed software and tools, CENP conducted a quality evaluation of the AC160 programmable logic controller (PLC) system planned to be used in implementing the safety functions of the reactor protection system for the Oskarshamn Modernization Project in Sweden."* *P.4 "CENP submitted the six proprietary reports:* • *2008677-IC-TR560-10, Rev. 00, dated September 24, 1999, "Seismic Qualification Test Report for Common Q Applications"* • *2008677-IC-TR560-11, Rev. 00, dated September 24, 1999, "Environmental Test Report for Module Equipment Qualification for Common Q Applications"* • *2008677-IC-TR560-12, Rev. 00, dated October 8, 1999, "EMI Qualification Test Report for Module Equipment Qualification for Common Q Applications"* • *00000-ICE-37722, Rev 00, dated November 11, 1999, "Commercial Grade Dedication Report for the QNX Operating System for Common Q Applications"* • *GWK F 700 778, Rev. 01, dated February 18, 2000, "Generic Operating History Evaluation Report on Previously-Developed Software in ABB AC160, I/O Modules and Tool Software"* • *GWK F 700 777, Rev. 02, dated February 22, 2000, "Design and Life Cycle Evaluation Report on Previously-Developed Software in ABB AC160, I/O Modules and Tool Software"* *P. 28 "CENP did not dedicate the software development tools. IEEE Std 7-4.3.2 does not require that the software tools be dedicated if the V&V process will detect errors that the tools may introduce. The CENP V&V procedures are specified in the SPM and have been evaluated in this safety evaluation. IEEE Std 7-4.3.2 requires that the tools be identified and placed under software configuration management control. CENP configuration management is evaluated and found acceptable in Section 4.3.1.k. On the basis of the above, the staff concludes that it is acceptable that the PDS development tools from QSSL not be dedicated."*	• 00000-ICE-37722, Rev. 00 • WNA-CD-00018-GEN, Rev. 03 • GWK F 700 778, Rev. 02 • GWK F 700 777, Rev. 02	**A**	**N**	**DONE**	**N/A**	**N/A**	**WBT-D-1526, January 28, 2010** **Document at W Rockville Office**

Watts Bar 2 – Common Q PAMS ISG-6 Compliance Matrix

	ISG-6 Document (Draft dated Feb/12/2010)	WEC Equivalent Document	WEC Document Number	TVA Submittal (S) or Available for Audit (A)	Non-Prop Rqr'd (Y/N)	Target Submittal Date (WEC to TVA)	Proprietary Issued Date / Letter	Application for Withholding Issued Date / Letter	Non-Prop Issued, Date / Letter or Forecast (F)
~~21~~	~~Software Training Plan~~	~~Watts Bar 2 Software Training Plan (Utility Responsibility)~~ (Not required per Feb 12, 2010 ISG-6 draft)	N/A	**N/A**		**DELETED**	**DELETED**	**DELETED**	**DELETED**
22	Software V&V Plan and Procedures	Common Q Software Program Manual (Section 5) *SER states, ""On the basis of the foregoing review of CENP's software development process for application software, the staff concludes that the SPM specifies plans that will provide a quality software life cycle process, and that these plans commit to documentation of life cycle activities that will permit the staff or others to evaluate the quality of the design features upon which the safety determination will be based."*	ML050350234	**N/A**	**N/A**	**DONE**	**Approved Topical Report**	**Approved Topical Report**	**Approved Topical Report**
23	Requirements Traceability Matrix	Watts Bar 2 PAMS specific RTM (Lifecycle Document, same ID, different revision depending on phase)	Concept & Definition Phase: WNA-VR-00279-WBT, Rev 0	A	N	**DONE**	**N/A**	**N/A**	**WBT-D-1961, May 21,, 2010 Document at W Rockville Office**
			Design Phase	A	N	July 9, 2010	N/A	N/A	
			Implementation Phase	A	N	Sept 10, 2010	N/A	N/A	
			Integration Phase	A	N	Oct 8, 2010	N/A	N/A	
			Final	A	N	Nov 12, 2010	N/A	N/A	
24	Commercial Grade Dedication Report	Commercial Grade Dedication Instructions for AI687, AI688, Upgraded PC node box and flat panels, power supply	AI867/AI688	A	N	Sept 28, 2010	N/A	N/A	
			PC Node Box & Flat Panel Display (CDI-3722, Rev 7 & CDI-3803, Rev 8)	A	N	**DONE**	**N/A**	**N/A**	**WBT-D-2024, June 9, 2010 Document at W Rockville Office**
			Power Supply (CDI-4057, Rev 4)	A	N	**DONE**	N/A	N/A	**WBT-D-2035, June 11, 2010 Document at W Rockville Office**
25	Commercial Grade Dedication Procedures	WEC Level II QA Procedures WEC 7.2, 7.3; RRAS Level II Procedures NA 7.4,	• WEC Level II QA Procedures WEC 7.2 (Rev 1), WEC 7.3 (Rev. 0) • RRAS Level III Procedures NA 7.4 (Rev. 0)	**A**	**N/A**	**DONE**	**N/A**	**N/A**	**WBT-D-1526, January 28, 2010 Document at W Rockville Office**
26	Final Design Description (As Built/End of FAT)	Final Watts Bar 2 PAMS specific SysRS and SRS. (Lifecycle Document(s), final revision identification unknown.)	WNA-DS-01617-WBT, Rev. >1	S	Y	Nov. 30, 2010			
			WNA-SD-00239-WBT, Rev. >1	S	Y	Nov. 30, 2010			
27	Final Logic Diagrams	Watts Bar 2 PAMS specific logic diagrams	CD with print out of final delivered function chart code	A	N	Nov. 30, 2010			
28	Final Reliability Analysis	Watts Bar 2 PAMS specific reliability analysis	TBD	A	N	August 31, 2010	N/A	N/A	
29	Final Report on Acceptance of	Summary report on acceptance of AI687, AI688, Upgraded PC node box, flat	AI867/AI688	A	N	Sept 28, 2010	N/A	N/A	

Watts Bar 2 – Common Q PAMS ISG-6 Compliance Matrix

	ISG-6 Document (Draft dated Feb/12/2010)	WEC Equivalent Document	WEC Document Number	TVA Submittal (S) or Available for Audit (A)	Non-Prop Rqr'd (Y/N)	Target Submittal Date (WEC to TVA)	Proprietary Issued Date / Letter	Application for Withholding Issued Date / Letter	Non-Prop Issued, Date / Letter or Forecast (F)
	Commercial Grade Dedication	panels and power supply	PC Node Box - LTR-EQ-10-50	A	N	**DONE**	N/A	N/A	**WBT-D-2024, June 9, 2010 Document at W Rockville Office**
			Flat Panel Display- LTR-EQ-10-50	A	N	**DONE**	N/A	N/A	**WBT-D-2024, June 9, 2010 Document at W Rockville Office**
			Power Supply - EQ-TP-105-GEN, EQ-TP-117-GEN, EQ-TP-114-GEN	A	N	**DONE**	N/A	N/A	**WBT-D-2035, June 11, 2010 Document at W Rockville Office**
30	Final System Configuration Documentation	Watts Bar 2 PAMS specific configuration drawings	TBD	A	N	Nov. 30, 2010	N/A	N/A	
31	Final Factory Acceptance Test Reports	Watts Bar 2 PAMS specific FAT report	TBD	A	N	October 2010	N/A	N/A	
~~32~~	~~Installation Test Plans and Procedures~~	~~Watts Bar 2 PAMS specific SAT test plan and procedure~~ (Not required per Feb 12, 2010 ISG-6 draft)	N/A	**N/A**	**N/A**	**DELETED**	**DELETED**	**DELETED**	**DELETED**
33	Qualification Test Procedures	EQ test procedures for AI687, AI688, Upgraded PC node box and flat panels, power supply	AI867/AI688	A	N	July 2, 2010	N/A	N/A	
			PC Node Box & Flat Panel Display (EQ-TP-33-GEN, EQ-TP-35-GEN, EQ-TP-60-GEN)	A	N	**DONE**	**N/A**	**N/A**	**WBT-D-1961, May 21,, 2010 Document at W Rockville Office**
			Power Supply	A	N	TBD	N/A	N/A	
34	Summary of Final EQ Test Results	EQ Summary report for AI687, AI688, Upgraded PC node box and flat panels, power supply	AI867/AI688	A	N	Sept 28, 2010	N/A	N/A	
			PC Node Box & Flat Panel Display	A	N	Sept 17, 2010	N/A	N/A	
			Power Supply	A	N	Sept 17, 2010	N/A	N/A	
35	Summary of Test Results (including FAT)	Watts Bar 2 PAMS specific IV&V Phase Summary Reports	Concept & Definition Phase: WNA-VR-00283-WBT, Rev 0	A	N	**DONE**	**N/A**	**N/A**	**WBT-D-1961, May 21,, 2010 Document at W Rockville Office**
			Design Phase	A	N	July 30, 2010	N/A	N/A	
			Implementation Phase	A	N	Sept 30, 2010	N/A	N/A	
			Integration Phase	A	N	October 29, 2010	N/A	N/A	
			Final Report	S	Y	Nov 30, 2010			
36	System Test Procedures	Watts Bar 2 PAMS specific FAT Procedure	TBD	A	N	Sept 30 2010			

Watts Bar 2 – Common Q PAMS ISG-6 Compliance Matrix

	ISG-6 Document (Draft dated Feb/12/2010)	WEC Equivalent Document	WEC Document Number	TVA Submittal (S) or Available for Audit (A)	Non-Prop Rqr'd (Y/N)	Target Submittal Date (WEC to TVA)	Proprietary Issued Date / Letter	Application for Withholding Issued Date / Letter	Non-Prop Issued, Date / Letter or Forecast (F)
37	Software Management Implementation Procedures	Watts Bar 2 PAMS specific Project Plan and Software Project Plan	WNA-PD-00073-WBT, Rev. 0	A	N	DONE	N/A	N/A	WBT-D-1526, January 28, 2010 Document at W Rockville Office
38	Software Project Risk Management Report	Watts Bar 2 PAMS specific Project Plan and Software Project Plan	WNA-PD-00073-WBT, Rev. 0	A	N	DONE	N/A	N/A	WBT-D-1526, January 28, 2010 Document at W Rockville Office
39	Software Test Procedures	1) Element Software Test Procedure, WNA-TP-00357-GEN	WNA-TP-00357-GEN, Rev. 4	A	N	DONE	N/A	N/A	WBT-D-1526, January 28, 2010 Document at W Rockville Office
		2) Watts Bar 2 PAMS specific Processor Module Software Test	TBD	A	N	August 31, 2010	N/A	N/A	
40	Software Tool Analysis Report	See Software Tool Verification Program	See Software Tool Verification Program (Item # 20)	A	N/A	DONE	N/A	N/A	WBT-D-1526, January 28, 2010 Document at W Rockville Office
41	V&V Reports	Watts Bar 2 PAMS specific IV&V Phase Summary reports	See item #35 for list	A	N	See item #35 for schedule	See item #35 for schedule	See item #35 for schedule	
42	System Build Documents	Software Release Records	TBD	A	N	Nov. 30, 2010	N/A	N/A	
43	Software Configuration Management Plan	Common Q Software Program Manual (Section 5) *SER states, "'On the basis of the foregoing review of CENP's software development process for application software, the staff concludes that the SPM specifies plans that will provide a quality software life cycle process, and that these plans commit to documentation of life cycle activities that will permit the staff or others to evaluate the quality of the design features upon which the safety determination will be based."*	ML050350234	N/A	N/A	DONE	Approved Topical Report	Approved Topical Report	Approved Topical Report
44	TVA/NRC Open Items List 5-0-2010	N/A	00000-ICE-30156 Rev. 6	A	N	DONE	N/A	N/A	WBT-D-2024, June 9, 2010 Document at W Rockville Office

Watts Bar 2 – Common Q PAMS ISG-6 Compliance Matrix

	ISG-6 Document (Draft dated Feb/12/2010)	WEC Equivalent Document	WEC Document Number	TVA Submittal (S) or Available for Audit (A)	Non-Prop Rqr'd (Y/N)	Target Submittal Date (WEC to TVA)	Proprietary Issued Date / Letter	Application for Withholding Issued Date / Letter	Non-Prop Issued, Date / Letter or Forecast (F)
45	New or modified items listed in the technical report	1) CI527 AF100 Peripheral Component Interconnect (PCI) interface card 2) Common Q TC514 AF100 Fiber Optic Modems (Evolutionary Product Maintenance/Improvements) 3) PM646A Processor Module 4) CI631 AF100 Communication Interface Module 5) DO620 Digital Output Card	These components can be found in the Summary Qualification Report Of Hardware Testing For Common Q Applications, 00000-ICE-37764, Rev 3 and TWICE Qualification Status Report, WNA-QR-00011-SSP	A	N	**DONE**	N/A	N/A	**WBT-D-2024, June 9, 2010 Document at W Rockville Office**

ENCLOSURE 1

Responses To Licensee Open Items To Be Resolved For SER Approval

ATTACHMENT 5

(This Attachment contained on the OSM)

Design Criteria WB-DC-30-7 Revision 22, "Post Accident Monitoring Instrumentation"

TENNESSEE VALLEY AUTHORITY

Division of Nuclear Engineering

N
E

RIMS
QA RECORD

N/A
DESIGN CRITERIA DOCUMENT

No. WB-DC-30-7

WATTS BAR
NUCLEAR PLANT
UNIT 1 / UNIT 2

TITLE: POST ACCIDENT MONITORING INSTRUMENTATION

*Signatures on original

REVISION	R0	R21	R22			
DATE:	*	1-29-2007	8-27-2008			
PREPARED	*	H.Henderson	R.Pachigolla			
CHECKED	----------	----------	D.C.Mather			
VERIFIED	*	J.L.Seeley	D.C.Mather			
APPROVED	*	R.M.Johnson	V.L.Lotspeich			
TVA MGMT	----------	----------	S.A.Hilmes			

TITLE: POST ACCIDENT MONITORING INSTRUMENTATION		REVISION LOG WB-DC-30-7
REVISION NO.	DESCRIPTION OF REVISION	DATE APPROVED
1	Revisions were required to remove the "holds" originally placed on the unresolved portions of this criteria. Other minor changes were also incorporated. The "hold" shown on paragraph 3.4.1.6 will be resolved when information requested from NEB is received per memorandums from F. W. Chandler to J. A. Raulston dated August 31, 1984 (EEB 840904 980), and November 15, 1984 (EEB 841115 918).	12/18/84
2	This is a general revision of the Design Criteria which complies with the requirements of Supplement 1 to NUREG-0737 and the guidance of Regulatory Guide 1.97 Rev 2. The revision introduces Type and Category definitions which are consistent with R.G. 1.97 Rev. 2. The category "Support Instrumentation" is no longer included or defined : references to Support Instrumentation have been deleted. Included in the revision are changes which were introduced through revision of the set of design input calculations listed in the References (Section 9). The substantial number of changes in this revision has made it impractical to indicate the changes with lines in the margin. This revision incorporated Commitments and Requirements in the C/R Data Base as of May 16, 1986. Type D variables will be identified at a later date.	09/22/88
3	This is a general revision of the design criteria which complies with the requirements of supplement 1 to NUREG - 0737 and the guidance of Regulatory Guide 1.97 revision 2. The following Design Input Memorandums have been incorporated with editorial changes where required. DIM-WB-DC-30-7-2 (B26 890405 014) DIM-WB-DC-30-7-3 (B26 891025 077) DIM-WB-DC-30-7-4 (B26 890814 076) DIM-WB-DC-30-7-5 (B26 891215 076) DIM-WB-DC-30-7-6 (B26 900419 077) DIM-WB-DC-30-7-7 (B26 900426 076) DIM-WB-DC-30-7-1 does not exist and is an invalid number. Other editorial changes were made throughout the document to clarify the requirements for post accident monitoring instrumentation and its circuitry. Also included in this revision are changes which were introduced through revision of the design input calculations listed in the reference section. (Section 9.0) The revision levels have been deleted from the calculations referenced in the reference section. (Section 9.0)	06/15/90

3 (cont'd)	Appendix B "Required Accuracies" has been deleted. **The Category 1 required accuracies are given in calculation WBN-OSG4-111. (Reference 9.1.14). [PL-08-0485 thru -0489]** The substantial changes in this revision have made it impractical to indicate the changes with revision bars in the margin.	
DCN S-12931-A	DCN RIMS No. B26 900928 801 Revised Sections 3.4.1.4, 3.5.1.1, 3.5.1.4, 3.5.1.5, and 4.3.1.1 to correct discrepancies and clarify the language regarding separation and isolation. Paragraph3.4.1.4 was changed to delete an improper reference and clarify that isolation devices shall be 1E qualified for that application. Paragraphs 3.5.1.1, 3.5.1,4, 3.5.1,5, and 4.3.1.1 were revised to clarify the requirements for separation of PAM channels 1, 2, and 3 (PAM 1, PAM 2, and PAM 3). Revised Appendix A, Table A-1 to specify a third SG NR level loop instead of using the SG WR level as the SG level PAM 3 channel and changed the diverse parameter for auxiliary feedwater flow from SG NR level to SG WR level. Revised pages: 12, 16, 21, Appendix A, Table A-1 (see revision bars).	09/28/90
4	This is a general revision of the design criteria. Minor changes, corrections, and editorial comments were incorporated. References 9.1.5, 9.1.16, 9.1.17, and 9.3.4 were deleted. In Table A-1, "Steam Generator Power Operated Relief and Safety Valves Status" was revised to read "Main Steam Flow", as allowed by R.G. 1.97. Revised 3.4.1.5, 3.4.1.6, and 3.4.2.6 to clarify recording requirements. Added recording requirements for Category 3 variables. Added requirements for instrument accuracy calculation. Revised Section 6.0 "Quality Assurance" and added the requirement to identify Category 2 non-Class 1E cables in CCRS as required by CAQR WBP 90021P. Added Appendix B - Table B-1. Incorporated OIDB-288 7-R00. No pages were deleted in this revision. The following pages were revised: 2-4, 7, 10-15, 18-24, 26-28, A-1, A-2, Table A-1, page numbers 1, 2, 3, 6, 8, 9, 10, 11, 12, and 14.	05/28/91

DCN M-18087-A	DCN RIMS NO T56920410957 Revised Appendix A Table A-1 Page 5 VAR NUM 36 to have an Analog Scale Range from 6400 to 7400 and a digital display from 0 to 9999 and a Non-1E Power Supply. Page added: Revision Log - V	04-10-92
DCN S-20605-A	DCN RIMS NO. T56920918899 Revised Appendix A Table A-1 Page 5 VAR NUM 36 to have a digital display from 6400 to 7400.	09-18-92
DCN M-21497-A	DCN RIMS NO. T56921116957 Revise variable number 70 pressurizer relief tank temperature to show vertical line "range to" to read 400. PP revised: Rev Log P. V, P. 8 of Appendix A, Table A-1	11-16-92
DCN M-18200-A	DCN RIMS NO. T56921116962 Revised Appendix A, Table A-1, Pages 1 & 14, to rescale Auxiliary Feedwater Flow Transmitters to 0-700 GPM. Pages revised: V, Page 1 & 14 of Appendix A, Table A-1	11-16-92
DCN S-21610-A	DCN RIMS NO T56 921124 882 Revised Section 3.4.1.7 to clarify accuracy calculation requirements for PAM Category 2 instruments. Revised Page 12 and Page V. Total pages affected equals 2.	11-24-92
DCN S-23452-A	DCN RIMS No. T56 930222 930 Revised Post Accident Monitoring Variables List, Appendix A Table A-1, VAR NUM 17.	02-21-93
DCN S-25193-A	DCN RIMS No. T56 930529 805 Appendix A, Table A-1 revised to correct range units for variables 92, 94 and 99. (Pages 10, 11 & 12). Appendix B, Table B-1 revised to add variable 92, Auxiliary Building Vent Flow Rate (Page B-1).	05-08-93
DCN M-09964-A	DCN RIMS No. T56 930618 892 Revised Post Accident Monitoring Instrumentation Component Qualification Matrix, Appendix A, Page A-1 and Section 3.5.2.2 to indicate PAM Category 2 control power requirements as "highly reliable (diesel or battery backed) non-divisional power sources." Revised Appendix A, Table A-1 to revise Type/Category requirements for Main Steam Line Radiation, Variable Number 7, from A1, C1, E2" to "C2, E2".	06/18/93
DCN W-25945-A	DCN RIMS No. T56 931124 971 **Revised Table B-1 to correct the variable names, primary elements, and computer addresses to agree with the ERFDS I/O List (45B901) [PL-08-0490]** and **the PAM Category 2 Variable calculation (WBPEVAR9202003). [PL-08-0491 thru -0500]** Added page vii and revised Page B-1 of Appendix B.	11/23/93

5	Revised to add Source Notes 1 and 2. Made minor administrative changes throughout the document. Pages Revised: i, Coordination Log, vi, 4, 5, 8, 12, 13, 14, 20, 22, 27, 28, 30, 32, through 46. Pages Added: 48 Pages Deleted: None	11/30/93
6	Revised to delete the MCR Particulate Monitor and to delete deviation 14 by meeting the R.G. 1.97 required range. Revised Sections 3.4.1.6 and 3.4.2.4 to clarify category 2 isolation. Pages Revised: 12, 14, 39, 42, 46 No Pages added or deleted.	01/27/94
DCN S-30679-A	DCN RIMS No. T56 940519 812 Revised name, primary element, and computer address for Variable 94. Added Page: via Revised Page: 47	05/18/94
DCN S-31881-A	DCN RIMS No. T56 940926 882 Revised to add Source Note 3. CATD 22911-WBN-01 Revised Pages: via, 48 Added Pages: None Deleted Pages: None	09/23/94
DCN S-35446-A	DCN RIMS No. T56 950408 838 Revised Sheet 12, Section 3.4.1.7 to add additional detail found in the FSAR. Revised Pages: via, 12 Added Pages: None Deleted Pages: None	04/08/95
7	Revised to add deviations to Reg Guide 1.97 R2, add additional references, added variable 95 to the ERFDS PAM display, and **to make revisions to the ranges for variables 95 & 96 are a result of revision to WBNAPS3-048 R8. [PL-08-0501]** Pages Revised: i, vii, Coordination Log, (viii), 4, 28, 32, 43, 47 Pages Added: 49 thru 67 Pages Deleted: None	05/08/95
DCN S-36511-A	DCN RIMS No. T56 950526 960 Revised Table B-1 to correct instrument I. D. number and Table A-1 to correct range. Revised Pages: via, 44, 47	05/26/95

DCN S-36997-A	DCN RIMS No. T56 950617 869 **Revised sheet 43, to revise the range of the condenser vacuum pump exhaust vent (noble gas) to agree with Revision 10 of WBNAPS3-048. [PL-08-0501]** Pages Revised: vii, 43 Pages Added: None Pages Deleted: None	06/17/95
8	**Revised to add deviation 14 per Revision 11 of WBNAPS3-048 [PL-08-0501]** and correct typographical error on page 33. Pages Revised: vii, viii, 28, 32, 33, 42, 46, 55 Pages Added: ix Pages Deleted: None	09/11/95
9	Revised to clarify Appendix A, Component Qualification Matrix, added note 12 to Appendix A, Table A-1, and correct typographical errors in Table A-1. Revised instrument number in Table B-1. Pages Revised: viii, 28, 30, 33, 34, 39, 46, 47, 55 Pages Added: 46a Pages Deleted: None	10/13/95
DCN S-38398-A	DCN RIMS No. T56 951107 810 Revised to clarify Appendix A, Component Qualification Matrix and Appendix A, Table A-1, Post Accident Monitoring Variables List per DCN S-38398-A. Pages Revised: 30, 44, 45, viii Pages Added: None Pages Deleted: None	11/07/95
10	Revised to change Appendix A, table A-1, Variable Number 29 (Accumulator Tank Level), Range From to 7450 Gallons and Range To to 8080 Gallons. This change was incorporated in the field based on DCN W-26189-A. Corrected typographical errors and pages numbers. Correctly identified Appendix C. Deviation 15 (in Table C) justified a large deviation from the Range recommended in RG 1.97 for this Variable. The new range is slightly different from that discussed in the justification, but the basis for the acceptability of the deviation from the RG 1.97 Recommended Range does not change. Therefore, no revision to Deviation 15 is necessary. Pages Revised: viii, ix, 4, 36, 45, 50 through 68, 46a to end of the document renumbered to delete page number 46a. Pages Added: None Pages Deleted: None	04/03/96

11	• DCN E-50024-A (T56 981023 800) changed DS-E18.1.20, "Instrumentation and Control, Labeling of Components" to DS-E18.1.24, "Human Factors Engineering" in Section 3.4.1.3, 3.4.2.3, 4.3.2.5, and 9.3.11, added Deviation 37 and other minor corrections. • Renumbered entire document, which changed page numbers on Table of Contents (pages xi through xiv). Pages Revised: All Total Pages: 79 (includes i through xiv and 1-65)	12/11/98
11A Admin Change	In accordance with PER 99-010239, administrative change to add effective date of Revision 11 on Coversheet and Revision Log page ix, and to add names on Coversheet of Preparer, Verifier, and Approver. Deleted RIMS No. on Coversheet Total Pages: 79 (includes i-xiv and 1-65)	7/27/99
12	Incorporates DCNs as follows: • DCN M-39608-A (T56 980407 801) revised design criteria to change Appendix C, Table C, Deviation 32, transmitter range from 20 ft. to 200 inches. This change will be reflected upon field completion of DCN M-39608-A. Regulatory Guide 1.97, Post Accident Monitoring Variable List, Appendix A, Table A-1, variable number 5, Containment Sump Level (Wide Range) range to 20 ft. has been changed to 200 inches. Added Reference 9.1.29. • DCN M-39911-A (T56 981215 803): Modification M-39911-A replaces the obsolete Unit 1 Westinghouse P2500 Plant Process Computer with a new Plant Integrated Computer System. This Plant Computer System provides an operator friendly, state of the art, real time process computer system for the WBN plant operators. After this modification, the new Plant Computer will be operational and performing all the functions of the existing Plant Computer (WB-DC-30-29) and Emergency Response Facilities Data System (ERFDS) (WB-DC-30-8). Therefore, Design Criteria's WB-DC-30-8 and WB-DC-30-29 have been combined into one Design Criteria WB-DC-30-29, "Plant Integrated Computer System." Design Criteria WB-DC-30-7 has been revised to incorporate this change by removing references to the Emergency Response Facilities Data System (ERFDS), Technical Support Center Computer or P2500 and replacing them with Plant Computer references. Revised Section 3.4.2.4, Appendix A, and Appendix B - Table B-1. • Deleted Coordination Log, which is not required per NEDP-10. • Renumbered entire document, which changed page numbers on the Table of Contents (pages x-xii). Total Pages: 74 (includes i-xii and 1-62)	8/24/99
13	Incorporates DCN as follows: • DCN 50885-A revised Section 3.4.1.4 to clarify that the requirement for isolation from components which perform automatic safety control functions applies to non-Class 1E components. • Reformatted and renumbered pages i-x. Total Pages: 72 (includes i-x and 1-62)	10/25/2001

14	Incorporates DCN as follows: • DCN 50917-A revised TABLE B-1 for PAM variable 46. Variable 46 was changed from recorder points to Plant Computer System for MCR indication. • Renumbered pages i-xi due to adding page to the Revision Log. Total Pages: 73 (includes pages i-xi and 1-62)	3-29-2002
15	Incorporates EDC as follows: • EDC 51161-A revised design criteria to include a requirement to identify Category 3 components in MEL and to define high quality for Category 3 components. Added Note 14 and made minor corrections to Appendix A, Table A-1. Revised Sections 3.4.3.1, 4.3.1.4, 4.3.3, added Section 4.3.3.1, revised Section 6.3 and Appendix A Table A-1. • Renumbered pages 1-62 due to adding Section 4.3.3.1, which changed page numbers on the Table of Contents (pages ix-xi). Total Pages: 73 (includes pages i-xi and 1-62)	9-6-2002
16	Incorporates DCN as follows: • DCN 50189-A revised design criteria to delete reference to Note 8 for Variable Number 23 (Containment Pressure - Wide Range) in Appendix A, Table A-1, Page No. 4. Total Pages: 73 (includes pages i-xi and 1-62)	10-30-2003
17	Incorporates DCNs as follows: • DCN 50933-A revised Appendix A, Component Qualification Matrix, to clarify recording requirements for Category 1 variables. Revised Appendix A, Table A-1, for variable number 4 to delete trending on non-divisional trend recorder. Revised Appendix B, Table B-1, to add variable number 4 and 96. • DCN 51075-A revised Appendix A, Table A-1, and Appendix C, Table C, for Variable Number 41 and Deviation 7 to change the WBN recommended range from 50 to 30 Deg F. Total Pages: 73 (includes pages i-xi and 1-62)	4-22-2004
18	Incorporates DCN as follows: • DCN 51239-A revised Appendix A, Component Qualification Matrix, and Appendix A, Table A-1, Post Accident Monitoring Variables List. Total Pages: 73 (includes pages i-xi and 1-62)	8-31-2004
19	Incorporates EDC as follows: • EDC 51787-A revised Appendix A Table A-1 and **Appendix C Deviation 14 to change the lower range for particulates in accordance with calculation WBNAPS3-048 Revision 15. [PL-08-0501]** Total Pages: 73 (includes pages i-xi and 1-62)	5-26-2005
20	Incorporates EDC as follows: • EDC 51723-A revised Appendix A to add footnote 15 for variable Number 18. Added References 9.1.30 and 9.1.31. Total Pages: 73 (includes pages i-xi and 1-62)	11-29-2006

21	Incorporates DCN as follows: • DCN 51856 replaces the mineral insulated cable inside containment from the reactor vessel head to the containment penetrations. The reference junction boxes are also removed including the cold reference RTDs in the boxes. The cold reference RTDs are replaced by RTDs which are integral with the cable at the transition from chromel and alumel to copper in the Incore Instrument Room (IIR). The replacement cable is routed in the same raceways, conduit, and reactor vessel refueling cavity wall penetration as the existing cable, no change in routing of the cable is occurring and mineral insulated cable is routed to the IIR. Appendix C Table C, Deviation 30: Revised to delete reference junction boxes. • Renumbered pages i-xii, due to adding a page to the Revision Log. Total Pages: 74 (includes pages i-xii and 1-62)	1-29-2007
22	This DCD has been reviewed and determined to be fully applicable to both Unit 1 and Unit 2. Outstanding WITEL Punchlist items are listed below: • PL-08-0482, see Section 9.2.10 • PL-08-0483, see Appendix A, Table A-1, Note 15 • PL-08-0484, see Appendix B, Table B-1 • PL-08-0485, see Rev. 3 and Section 9.1.14 • PL-08-0486, see Rev. 3 and Section 9.1.14 • PL-08-0487, see Rev. 3 and Section 9.1.14 • PL-08-0488, see Rev. 3 and Section 9.1.14 • PL-08-0489, see Rev. 3 and Section 9.1.14 • PL-08-0490, see Rev. DCN W-25945-A • PL-08-0491, see Rev. DCN W-25945-A • PL-08-0492, see Rev. DCN W-25945-A • PL-08-0493, see Rev. DCN W-25945-A • PL-08-0494, see Rev. DCN W-25945-A • PL-08-0495, see Rev. DCN W-25945-A • PL-08-0496, see Rev. DCN W-25945-A • PL-08-0497, see Rev. DCN W-25945-A • PL-08-0498, see Rev. DCN W-25945-A • PL-08-0499, see Rev. DCN W-25945-A • PL-08-0500, see Rev. DCN W-25945-A • PL-08-0501, see Rev. 7; Rev. DCN S-36997-A; Rev. 8; Rev. 19; Section 9.1.15; Appendix A, Table A-1, Note 7 and Appendix C, Table C • PL-08-0502, see Section 4.1, and Section 9.1.11 • PL-08-0503, see Section 4.3.1.3; and Section 4.3.2.2 • PL-08-0504, see Section 4.3.1.4; and Section 4.3.2.3	8-27-2008

22 (cont'd)	• PL-08-0505, see Section 9.1.7 • PL-08-0506, see Section 9.1.8 • PL-08-0507, see Section 9.1.9 • PL-08-0508, see Section 9.1.9 • PL-08-0509, see Section 9.1.9 • PL-08-0510, see Section 9.1.9 • PL-08-0511, see Section 9.1.9 • PL-08-0512, see Section 9.1.9 • PL-08-0513, see Section 9.1.9 • PL-08-0514, see Section 9.1.9 • PL-08-0515, see Section 9.1.9 • PL-08-0516, see Section 9.1.9 • PL-08-0517, see Section 9.1.12 • PL-08-0518, see Section 9.1.13 • PL-08-0519, see Section 9.1.13 • PL-08-0520, see Section 9.1.18 and Section 9.1.30 • PL-08-0521, see Section 9.1.18 and Section 9.1.30 • PL-08-0522, see Section 9.1.18 and Section 9.1.30 • PL-08-0523, see Section 9.1.18 and Section 9.1.30 • PL-08-0524, see Section 9.1.18 and Section 9.1.30 • PL-08-0525, see Section 9.1.18 and Section 9.1.30 • PL-08-0526, see Section 9.1.18 and Section 9.1.30 • PL-08-0527, see Section 9.1.18 and Section 9.1.30 • PL-08-0528, see Section 9.1.18 and Section 9.1.30 • PL-08-0529, see Section 9.1.18 and Section 9.1.30 • PL-08-0530, see Section 9.1.23 • PL-08-0531, see Section 9.1.23 • PL-08-0532, see Section 9.1.23 • PL-08-0533, see Section 9.1.23 • PL-08-0534, see Section 9.1.23 • PL-08-0535, see Section 9.1.23 • PL-08-0536, see Section 9.1.23 • PL-08-0537, see Section 9.1.23 • PL-08-0538, see Section 9.1.23 • PL-08-0539, see Section 9.1.23 • PL-08-0540, see Section 9.1.31 and Appendix A, Table A-1, Note 15 • PL-08-0541, see Section 9.2.1 Pages Revised: Coversheet, iii, iv, v, vi, viii, ix, x, 14, 16, 17, 20, 21, 22, 39, 40, 41, 60 Total Pages: 75 (includes pages i-xiii and 1-62)	

TABLE OF CONTENTS

Section Title Page

1.0 SCOPE 1

1.1 Purpose 1
1.2 Scope of Coverage 1

2.0 DEFINITIONS 1

2.1 Type A Variables 1
2.2 Type B Variables 2
2.3 Type C Variables 2
2.4 Type D Variables 2
2.5 Type E Variables 2
2.6 Immediately Accessible Information 2
2.7 Primary Information 2
2.8 Key Variable 2
2.9 Backup Variable 2
2.10 Categories 1, 2, and 3 2
2.11 Diverse Variable 3
2.12 Critical Safety Functions 3

3.0 DESIGN BASES 3

3.1 Functional Requirements 3

3.1.1 Variable Type Determination 4
3.1.2 Selection of Variable Category 4

3.1.2.1 Selection Criteria for Category 1 4
3.1.2.2 Selection Criteria for Category 2 5
3.1.2.3 Selection Criteria for Category 3 5

3.2 Design Basis Events 5
3.3 Plant Environmental Conditions 5
3.4 Specific Instrumentation Requirements 5

3.4.1 Category 1 Instrumentation 5

3.4.1.1 General Qualification Requirements 5
3.4.1.2 Single Failure Criteria 6
3.4.1.3 Unique Identification In The MCR 6
3.4.1.4 Interface to Non-Class 1E Components 6
3.4.1.5 Display Means 7
3.4.1.6 Recording Requirements 7
3.4.1.7 Instrument Accuracy Calculations 7

3.4.2 Category 2 Instrumentation 8

3.4.2.1 General Qualification Requirements 8
3.4.2.2 Single failure Criteria 8
3.4.2.3 Unique Identification In The MCR 8
3.4.2.4 Interface to Non-Class 1E Components 8
3.4.2.5 Display Means 9
3.4.2.6 Recording Requirements 9

TABLE OF CONTENTS (continued)

Section	Title	Page
3.4.3	Category 3 Instrumentation	9
3.4.3.1	General Qualification Requirements	9
3.4.3.2	Display Means	9
3.4.3.3	Recording Requirements	9
3.4.4	Common Requirements	9
3.4.4.1	Human Factors	9
3.4.4.2	Direct Measurement	9
3.4.4.3	Routine Use	10
3.5	Electrical Requirements	10
3.5.1	Category 1	10
3.5.1.1	Redundancy	10
3.5.1.2	Signal Isolation	10
3.5.1.3	Control Power	10
3.5.1.4	Separation and Isolation	11
3.5.1.5	Third Channels	11
3.5.2	Category 2	12
3.5.2.1	Redundancy	12
3.5.2.2	Control Power	13
3.5.2.3	Separation	13
3.5.2.4	Additional Requirements	13
3.5.3	Category 3	13
3.5.3.1	Separation and Redundancy	13
3.5.3.2	Control Power	13
3.5.3.3	Additional Requirements	13
3.6	Mechanical Requirements	13
3.6.1	Category 1	14
3.6.1.1	Category I Structures	14
3.6.2	Category 2	14
3.6.2.1	Seismic Operability Required	14
3.6.2.2	Seismic Operability Not Required	14
3.6.3	Category 3	14
4.0	LAYOUT AND ARRANGEMENT	14
4.1	General Description	14
4.2	Location	15
4.2.1	Category 1	15
4.2.2	Category 2 and 3	15
4.2.3	Control-Display Integration	15
4.3	Identification	15
4.3.1	Category 1	15
4.3.1.1	Derived Indication	15
4.3.1.2	Unique Identification In The MCR	16
4.3.1.3	Control Diagrams	16
4.3.1.4	Components	16
4.3.1.5	Cables	17
4.3.1.6	Color Coded Nameplate	17

TABLE OF CONTENTS (continued)

Section Title Page

4.3.2 Category 2 17
4.3.2.1 Unique Identification In The MCR 17
4.3.2.2 Control Diagrams 17
4.3.2.3 Components 17
4.3.2.4 Cables 18
4.3.2.5 Color Coded Nameplate 18

4.3.3 Category 3 18
4.3.3.1 Components 18

5.0 TESTING AND SURVEILLANCE REQUIREMENTS 18

5.1 General Servicing, Testing, and Surveillance Requirements .. 18

5.1.1 Programs 18
5.1.2 Channel Removal from Service 18
5.1.3 Administrative Control 19
5.1.4 Minimize Anomalous Indications 19
5.1.5 Repair 19
5.1.6 Capability for Verifying Operability 19

5.2 Surveillance Requirements Category 1 and 2 Instrumentation . 19

6.0 QUALITY ASSURANCE 19

6.1 Category 1 Variables 19
6.2 Category 2 Variables 19
6.3 Category 3 Variables 20

7.0 EXCEPTIONS 20

8.0 ADDITIONAL REQUIREMENTS 20

9.0 REFERENCES 20

9.1 Design Input 20
9.2 Background 22
9.3 Design Criteria and Standards 22

Appendix A - Post Accident Monitoring Instrumentation Component Qualification 23

- Post Accident Monitoring Instrumentation Requirements 24

- Post Accident Monitoring Instrument Variables List 26

Appendix B - Post Accident Monitoring Variables Utilizing The Plant Computer System for MCR Indication ... 41

Source Notes 42

Appendix C - Reg Guide 1.97 R2 Deviation and Justifications for Deviations 43

1.0 SCOPE

This document establishes the requirements for instrumentation used to assess plant and environs conditions during and following an accident at Watts Bar Nuclear Plant.

1.1 Purpose

This document establishes the method of meeting several requirements derived from General Design Criteria 13, 19, and 64 of Appendix A to Title 10 Code of Federal Regulations Part 50 (10CFR50), and of Supplement 1 to NUREG-0737 "Requirements for Emergency Response Capability." In particular, it specifies WBN's approach to satisfying the intent of Regulatory Guide 1.97 (R2)1,2 as required by Supplement 1.

This document is not a governing document for all plant monitoring instrumentation. Some instrumentation may have more stringent requirements placed upon it to perform a function outside the scope of this criteria. Instrumentation with specifications less stringent than those placed on it by the requirements of this criteria must be upgraded as appropriate or have an approved exception entered in either Section 7.0 or Appendix A of this criteria. Per NEP 3.2, approval will require independent review of the exception request by both Electrical Engineering and Nuclear Engineering.

1.2 Scope of Coverage

Instrumentation used by plant operators to assess plant and environs conditions during and following an accident includes a subset of instrumentation used for normal plant operation plus instrumentation for specific accident monitoring functions. The plant parameters included in this Design Criteria are listed in Appendix A.

The Category 1 instrumentation provides essential information required by the operator to diagnose and monitor significant accident conditions.

Category 2 and Category 3 instrumentation provide additional nonessential information to the operator to diagnose and monitor significant accident conditions as well as information required to determine the magnitude of radioactive material releases and continually assess such releases.

2.0 DEFINITIONS

2.1 Type A Variables

Those variables to be monitored that provide the primary information required to permit the control room operator to identify events and take specific manually-controlled actions required by the emergency instructions for which no automatic control is provided and that are required for safety systems to accomplish their safety functions for design basis events.

2.2 Type B Variables

Those variables that provide information to monitor the process of accomplishing critical safety functions.

2.3 Type C Variables

Those variables that indicate the potential for breaching or the actual breach of barriers to fission product release (including high level radioactive release through identifiable release points; i.e., plant vents).

2.4 Type D Variables

Those variables that provide information to indicate the operation of individual safety systems and other plant systems. These variables are to help the operator make appropriate decisions in using the individual systems in mitigating the consequences of an accident.

2.5 Type E Variables

Those variables to be monitored as required for use in determining the magnitude of the release of radioactive materials and continually assessing such releases.

2.6 Immediately Accessible Information

Information that is available to an operator within human response time once the decision that the information is needed has been made.

2.7 Primary Information

Primary information is information that is essential for the direct accomplishment of the specified safety functions; it does not include those variables that are associated with contingency actions that may also be identified in written procedures.

2.8 Key Variable

A key variable is that single variable (or minimum number of variables) that provides primary information and most directly indicates the accomplishment of a safety function (in the case of Types B and C) or the operation of a safety system (in the case of Type D) or radioactive material release (in the case of Type E.).

2.9 Backup Variable

Additional variables beyond those classified as key, that provide diagnostic or confirmatory information.

2.10 Categories 1, 2, and 3

Regulatory Guide 1.97 classifies the qualification criteria for instrumentation into three categories: Category 1 for the most stringent requirements, Category 2 for less stringent requirements, and Category 3 for the remainder of instrumentation. The discussion of specific instrumentation requirements is contained in Section 3.4.

2.11 Diverse Variable

Where failure of a Category 1 channel results in information ambiguity that can lead the operator to defeat or fail to accomplish a required safety function, a second variable shall be identified to allow the operators to deduce the actual condition in the plant. The second variable, qualified identically to the first, is called a diverse variable. It is an independent channel to monitor the different variable that bears a known relationship to the multiple channels.

A diverse variable may be an additional channel of the same variable or of a different variable of a known relationship.

Diverse variables are identified in Table A-1. Additional, redundant instrumentation is discussed in Sections 3.5.1.1 and 3.5.1.5.

2.12 Critical Safety Functions

Those safety functions that are essential to prevent a direct and immediate threat to the health and safety of the public. These are the accomplishing or maintaining of:

1. Reactivity Control

2. Reactor core cooling and heat removal from primary system

3. Reactor coolant system integrity

4. Radioactivity control

5. Containment

3.0 DESIGN BASES

3.1 Functional Requirements

The function of post accident monitoring instrumentation is to provide data to assist control room operators in mitigating the consequences of design basis events.

Among the data to be provided are those plant parameters necessary to the operator to execute WBN Emergency Instructions. Specifically, the instrumentation provides information needed to:

a. Enable the operator to monitor plant conditions or take the correct manual action during the course of a Condition II, III, or IV event or during recovery from a Condition II, III, or IV event.

b. Maintain safe shutdown

Type B and C variables will also provide monitoring capability beyond Condition II, III, or IV events as addressed by the emergency instructions.

3.1.1 Variable Type Determination

Variable types are defined in Section 2. Calculations have been performed in which the definitions are used to identify the type to be assigned to specific plant parameters. The following calculations and R.G. 1.97 provide input to the Type and Category column of Table A-1.

Type	Reference
A	9.1.7
B and C	9.1.8
D	9.1.9
E	9.1.15

A variable included as a type A does not preclude it from being included as a Type B, C, D, or E or vice versa.

3.1.2 Selection of Variable Category

Description of the type determination method is given in Section 3.1.1. The definitions for key and backup variables are given in Section 2. The sections below provide selection criteria for Category 1, 2, and 3 variables and are based on guidance provided in Reference 9.1.1.

3.1.2.1 Selection Criteria for Category 1

The selection criteria for Category 1 variables are subdivided according to the variable type. Type A variables are all key variables and are used for accident diagnosis and providing information necessary for manual operator action and shall be designated as Category 1.

For Type B, those key variables which are used for monitoring the process of accomplishing or maintaining critical safety functions shall normally be designated as Category 1. For Type C, those key variables which are used for monitoring the potential for breach or actual breach of a fission product barrier shall normally be designated as Category 1. For Type D, these variables are not designated Category 1 unless required by R.G. 1.97 R2. Exceptions to the Category 1 designation of Type B and C variables shall be allowed for those Type B and C variables identified in RG 1.97 R2 as having either a Category 2 or 3 classification. The variables category assignments will be identified in Table A-1. Category 1 accident monitoring instrumentation is designed with redundant or diverse channels so that a single failure does not prevent the operator from determining the need for operator action and the response of the plant to the safety measures in operation.

3.1.2.2 Selection Criteria for Category 2

The selection criteria for Category 2 variables are subdivided according to the variable type. No Type A variables shall be identified as Category 2. For Types B and C, those variables which provide backup information for safety related functions shall be designated as Category 2. For Type D, those key variables used for monitoring the performance of safety systems shall be designated as Category 2. For Type E, those key parameters to be monitored for use in determining the magnitude of the release of radioactive materials and for continuously assessing such releases shall be designated Category 2.

3.1.2.3 Selection Criteria for Category 3

The selection criteria for Category 3 variables are subdivided according to the variable type. No Type A variables shall be identified as Category 3. For Types B, C, D and E, those variables which provide backup information shall be designated Category 3.

3.2 Design Basis Events

3.2.1 Indication of Type A variables is required for mitigation of design basis events (Condition II, III, and IV events as analyzed in Chapter 15 of the Watts Bar Nuclear Plant Final Safety Analysis Report, Reference 9.2.2) where manual action is required.

Indication of Type B and C variables provides support to control room operators in the mitigation of design basis events and events beyond the design basis. The ranges of some of the instruments monitoring Type C variables shall be selected to extend beyond the range of the parameter's expected value during design basis events.

3.3 Plant Environmental Conditions

3.3.1 The environmental conditions for normal operation and design basis event conditions are defined in Reference 9.2.1.

3.4 Specific Instrumentation Requirements

3.4.1 Category 1 Instrumentation

3.4.1.1 General Qualification Requirements

Category 1 instrumentation located in a harsh environment and required to function for the 10 CFR 50.49 events shall satisfy the requirements in WB-DC-40-54 (Ref. 9.3.5).

Category 1 instrumentation located in a mild environment shall be suitable for operation within the environmental conditions for which it is located. Refer to WB-DC-40-54 for the definition of harsh and mild environments.

Category 1 instrumentation shall be qualified in accordance with the Watts Bar Nuclear Plant Design Criteria (Reference 9.3.3 (WB-DC-40-31.2) "Seismic Qualification of Category I Fluid System Components and Electrical or Mechanical Equipment."). Qualification applies to the complete instrumentation channel from the sensor to the display where the display is a direct reading meter or recording device.

Refer to "Component Qualification Matrix," Appendix A

3.4.1.2 Single Failure Criteria

No single failure within the Category 1 instrumentation, its auxiliary support equipment, or its power sources, shall result in the loss of the information provided by the instrumentation. Refer to WB-DC-40-64 (Ref. 9.3.6).

Any single failure within the Category 1 instrumentation shall not result in the loss of the monitoring function. To provide for a single failure proof design, additional redundant channels may be provided, one or several diverse channels (see Section 2.11) may be provided, or it shall be demonstrated by analysis that the operator will take conservative action to resolve ambiguity (see Reference 9.1.11). 'Single failure' includes such events as the shorting or open circuiting of interconnecting signal or power cables. It also includes single credible malfunctions or events that cause a number of consequential component, module, or channel failures. For example, the overheating of an amplifier module is a 'single failure' even though several transistor failures result. Mechanical damage to a mode switch would be a 'single failure' although several channels might become involved.

3.4.1.3 Unique Identification in the MCR

Category 1 variable main control room (MCR) display devices shall be specifically identified on the control panels so that the operator can easily discern that they are displaying information from a Category 1 channel. The symbol C1 shall be engraved on the nameplate per design standard DS-E18.1.24. (Reference 9.3.11)

3.4.1.4 Interface to Non-Class 1E Components

Transmission of Class 1E Category 1 signals to or from components that are non-1E shall only be through an isolation device which is classified as part of a Class 1E instrumentation system. This isolation device shall be accessible to operations and maintenance personnel during the worst-case post-accident environment of the area where the isolation device is located. The function performed by these isolators is to prevent electrical faults in nonqualified circuits, which derive their signals from qualified portions of Class 1E circuits, from propagating to the Class 1E circuit.

In addition, transmission of Category 1 signals to Non-Class 1E components from components which perform automatic safety control functions (i.e., Reactor Protection System) shall only be through isolation devices which are qualified as Class 1E instruments.

3.4.1.5 Display Means

Category 1 instrumentation signals shall be displayed on an individual continuous display and immediately accessible in the main control room. Category 1 parameters which are displayed on displays that are continuously available (reactor vessel level and core exit temperature) are considered continuously displayed and therefore meets the requirements of this section.

3.4.1.6 Recording Requirements

Parameters which have safety related trends are identified in Reference 9.1.12, "Determination of R.G. 1.97 Variables Requiring Trend Indication." Reference 9.1.13 "Determination of Devices Required for Indicating Safety Related Trends for WBNP PAM" determines the hardware required to display the trends. At least one of the channels used to monitor each Category 1 analog parameter shall be recorded in an immediately accessible manner to provide a historical record. Non-1E recorders or a computer-based data acquisition and display system may be used where primary indication is provided by a qualified meter or other qualified display. Non-Class 1E recorders provided for the latter function shall be isolated from the instrument circuit as described in Section 3.4.1.4 above and qualified to Category 2 isolation requirements[2] in accordance with Section 3.4.2.

3.4.1.7 Instrument Accuracy Calculations

Where two or more instruments are needed to cover a particular range, overlapping of instrument spans and accuracies will be provided to ensure one of the two instruments will be on scale at all times.

All Category 1 or 2 instruments located in a 10CFR50.49 harsh environment shall have a demonstrated instrument accuracy calculation performed.

Category 2 instruments which receive their input signal from a Category 1 loop do not require an accuracy calculation.

Range and accuracy requirements are determined through the analysis of Condition II, III, or IV events as described in FSAR Chapter 15. The display system meets the following requirements:

a. The range of the readouts extends over the maximum expected range of the variables being measured.

b. The combined indicated accuracies are within the errors used in the safety analysis.

3.4.2 Category 2 Instrumentation

3.4.2.1 General Qualification Requirements

Category 2 instrumentation located in harsh environments and required to function for 10CFR50.49 events shall be qualified in accordance with WB-DC-40-54 (Reference 9.3.5)[2]. Seismic qualification is required per seismic Category I requirements, (see Section 3.6.2), if the instrument is part of a safety-related system. Where the channel signal is to be processed or displayed on demand, qualification applies to the complete instrumentation channel from the sensor through the isolator/input buffer. The location of the isolation device or input buffer should be such that it shall be accessible for maintenance during accident conditions. Category 2 instrumentation which does not experience harsh environmental conditions may be designed and installed according to Category 3 requirements (See Section 3.4.3).

A variable designated as Category 2 shall be designed and installed to the higher of the qualification requirements determined in this design criteria or in the respective system description.

Refer to "Qualification Matrix," Appendix A

3.4.2.2 Single Failure Criteria

The single failure criteria do not apply to Category 2 instruments.

3.4.2.3 Unique Identification in the MCR

Category 2 MCR instruments shall be specifically identified on the control panels so that the operator can easily discern that they are displaying information from a Category 2 channel. The designation C2 shall be engraved on the nameplate per design standard DS-E18.1.24 (Reference 9.3.11). Section 4.3.2.1 contains identification requirements for computer or annunciator based Category 2 displays.

3.4.2.4 Interface to Non-Class 1E Components

Category 2 instrumentation that is Class 1E for its normal system function shall be isolated from non-Class 1E circuits in accordance with Section 3.4.1.4.

Category 2 instrumentation that is non-1E shall have isolation from other non-1E circuits by means of typical industry methods (optional isolation, transformer or resistor networks, etc.). This isolation is to ensure that other non-IE circuits will not affect Category 2 instrumentation loops. An example of adequate isolation is provided by the annunciator system that uses optical isolation of all inputs coming into the system. This prevents any input failure or fault from affecting the annunciator system and other loops. Another example is the plant computer system which uses transformer and optical isolation.

3.4.2.5 Display Means

The instrumentation signal may be displayed on an individual instrument or it may be processed for display on demand by a computer based data acquisition and display system or by other appropriate means.

The display device need not be Class 1E. If a non-class 1E display device is used on a Class 1E channel, the interface requirements of Section 3.4.2.4 above shall be met.

3.4.2.6 Recording Requirements

Category 2 effluent radioactivity monitors and area radiation monitors shall be recorded. No other safety-related recording is required for Category 2.

3.4.3 Category 3 Instrumentation

3.4.3.1 General Qualification Requirements

The instrumentation shall be of high-quality commercial grade. A high quality device demonstrates superiority and excellence in attributes that are determined to be critical characteristics such as reliability, durability, long life, safety, physical construction, and design. Refer to "Qualification Matrix," Appendix A

3.4.3.2 Display Means

The instrumentation signal may be displayed on an individual instrument or it may be processed for display on demand by a computer based data acquisition and display system or by other appropriate means.

3.4.3.3 Recording Requirements

Category 3 meteorology data shall be recorded either on a recorder or on the computer. No other recording is required for Category 3.

3.4.4 Common Requirements

3.4.4.1 Human Factors

Human factors principles shall be used in determining type and location of displays. (See Reference 9.3.7, WB-DC-30-23 "Human Factors")

3.4.4.2 Direct Measurement

To the extent practical, monitoring instrumentation inputs shall be from sensors that directly measure the desired variables. An indirect measurement shall be made only when it can be shown by analysis to provide unambiguous information.

3.4.4.3 Routine Use

To the extent practical, the same instruments shall be used for accident monitoring as are used for the normal operations of the plant to enable the operators to use, during accident situations, instruments with which they are most familiar. However, where the required range of monitoring instrumentation results in a loss of instrumentation sensitivity in the normal operating range, separate instruments shall be used.

Means shall be provided for checking, with a high degree of confidence, the operational availability of each system input sensor during reactor operation.

This may be accomplished in various ways, for example:

(1) By perturbing the monitored variable; or (2) By introducing and varying, as appropriate, a substitute input to the sensor of the same nature as the measured variable; or (3) By cross checking between channels that bear a known relationship to each other and that have readouts available.

3.5 Electrical Requirements

3.5.1 Category 1

3.5.1.1 Redundancy

Normally, Category 1 circuits shall be required to have two redundant channels, post-accident monitoring channel 1 (PAM 1) and post-accident monitoring channel 2 (PAM 2). The single failure analysis (Reference 9.1.11) may require a third redundant post-accident monitoring channel 3 (PAM 3) to be used.

3.5.1.2 Signal Isolation

Transmission of Class 1E category 1 signals to components that are non-1E shall only be through isolation devices which are classified as part of the Class 1E instrumentation and meet all the requirements of the system. No credible failure at the output of an isolation device shall prevent the associated monitoring system channel from meeting the minimum performance requirements considered in the design bases. Examples of credible failure include short circuits, open circuits, grounds, and the application of the maximum credible AC or DC potential (140 V DC or 118 V AC).

3.5.1.3 Control Power

Control power for Category 1 variables shall be supplied from the station standby power sources, meaning Class 1E battery backed power. Circuits requiring 125 VDC power shall be supplied by the 125 VDC vital battery boards. Circuits requiring 120 VAC power shall be supplied by the 120 VAC vital instrument power boards.

Control power for PAM 1 circuits shall be supplied from either an A-train source, 125 VDC battery boards I or III, or 120 VAC vital instrument power boards I or III.

Control power for PAM 2 circuits shall be supplied from either a B-train source, 125 VDC battery boards II or IV, or the 120 VAC vital instrument power boards II or IV.

Control power for PAM 3 circuits shall be supplied from any of the 125 VDC battery boards I, II, III, or IV, or the 120 VAC vital instrument power boards I, II, III, or IV but shall not be from the same power supply as the PAM 1 or PAM 2 channels for that same variable.

See Table 1 "Category 1 Power Requirements."

3.5.1.4 Separation and Isolation

Redundant channels shall be electrically independent and physically separated from each other and shall meet the requirements set forth in WB-DC-30-4, "Separation/Isolation" (Reference 9.3.1). The same requirements apply to separation of PAM 3 cables from PAM 1 and PAM 2 cables.

3.5.1.5 Third Channels

Specific variables which require three channels (identified in the single failure analysis Reference 9.1.11 and designated in Table A-1) of information to be displayed in the MCR shall have the third channel cables routed and separated as described in Section 3.5.1.4. The control power supply for these channels shall be derived as described in Section 3.5.1.3 above.

3.5.2 Category 2

3.5.2.1 Redundancy

Redundant circuitry is not required.

Channel	125V DC Control Power						120 V AC Control Power			
PAM 1	TRAIN A		BATTERY BD-I		BATTERY BD-III		120V AC VITAL INSTR POWER BD-I		120V AC VITAL INSTR POWER BD-III	
PAM 2		TRAIN B		BATTERY BD-II		BATTERY BD-IV		120V AC VITAL INSTR POWER BD-II		120V AC VITAL INSTR POWER BD-IV
PAM 3			BATTERY BD-I*	BATTERY BD-II*	BATTERY BD-III*	BATTERY BD-IV*	120V AC VITAL INSTR POWER BD-I*	120V AC VITAL INSTR POWER BD-II*	120V AC VITAL INSTR POWER BD-III*	120V AC VITAL INSTR POWER BD-IV*

*Must not be the same power supply as PAM 1 or PAM 2 for that same variable.

TABLE 1

CATEGORY 1 INSTRUMENT POWER REQUIREMENTS

3.5.2.2 Control Power

If Class 1E power is required due to system functional requirements as specified in the respective system description, then the channel shall be installed in the Class 1E division selected by the designer and shall satisfy the requirements appropriate to that division. (See Reference 9.3.2) Where non-Class 1E power is used, then control power shall be derived from highly reliable (diesel or battery backed) non-divisional power sources.

3.5.2.3 Separation

Separation is not required by Regulatory Guide 1.97 for Category 2 instrumentation. However, separation may be required because of other regulatory, functional, power, or system requirements. In those cases, the most stringent requirements shall be met and separation shall be implemented according to WB-DC-30-4, "Separation/Isolation" (See Reference 9.3.1).

3.5.2.4 Additional Requirements

Some circuits have more stringent requirements placed upon them due to other design or regulatory requirements. The most stringent requirements shall apply (i.e., PAM may allow non-1E power and no QA but the normal system function requires 1E power and full QA.).

3.5.3 Category 3

3.5.3.1 Separation and Redundancy

Separation and redundant circuitry are not required for PAM. The cable routing shall be in accordance with the requirements for non-divisional circuits from Reference 9.3.1. However, separation may be required because of other regulatory, functional, power, or system requirements.

3.5.3.2 Control Power

The control power supply for these circuits may be derived from non-divisional power sources.

3.5.3.3 Additional Requirements

Some circuits may have more stringent requirements placed upon them due to other design or regulatory requirements. The most stringent requirements shall apply.

3.6 Mechanical Requirements

References 9.3.3 and 9.3.8 describe the requirements outlined in the following sections.

3.6.1 Category 1

3.6.1.1 Category I Structures

Components located in seismic Category I structures shall continue to perform the required function following a design basis seismic event.

3.6.2 Category 2

No specific requirements exist for seismic operability due to the guidance of Reference 9.1.1. However, specific system requirements may exist for seismic operability; if so, the instrumentation shall be qualified as described below or as specified in the instrument's respective system description.

3.6.2.1 Seismic Operability Required

Components required to be operable after a seismic event due to normal system requirements shall be qualified to Seismic Category I requirements (Reference 9.3.3).

3.6.2.2 Seismic Operability Not Required

Components not required to be operable after a seismic event shall be designed and mounted such that they do not have an adverse effect on safety systems during or following a design basis seismic event. This shall be accomplished through qualification to Seismic Category I (L) requirements for components located in Category I structures (Reference 9.3.8).

3.6.3 Category 3

3.6.3.1 Components shall be designed and mounted such that they do not have an adverse effect on safety systems during or following a design basis seismic event. This shall be accomplished through qualification to Seismic Category I (L) requirements for components located in a Category I structure (Reference 9.3.8).

4.0 LAYOUT AND ARRANGEMENT

4.1 General Description

Category 1 parameters shall be monitored by at least two redundant channels PAM 1 and PAM 2. **The single failure analysis calculation (WBN-OSG4-051 Reference 9.1.11) defines the variables that require a third redundant channel. [PL-08-0502]** The third redundant channel will be designated as PAM 3. Instrumentation for Category 2 and 3 variables shall consist of at least one channel, but the instrumentation may have redundant channels if they have been provided to satisfy other regulatory or design requirements.

4.2 Location

4.2.1 Category 1

All Category 1 variables shall be displayed on individual instruments located in the MCR.

4.2.2 Category 2 and 3

Category 2 and 3 variables may be displayed on individual instruments or the variables may be displayed on one of the computer-based displays.

Some Category 2 and 3 variables will not be required to be in the MCR. The types of instrumentation not required to be displayed in the MCR can be categorized as portable or post-accident sampling instrumentation. Additional instrumentation not requiring a display in the MCR is identified in Table A-1 with the entry "local indication" and meet the following guidelines:

1. The information displayed is of a non-critical or diagnostic nature.
2. The local panel display is accessible under accident conditions.
3. The information can be retrieved in a timeframe necessary to support the operator's action.
4. The parameter changes slowly such that only infrequent updates are needed.

4.2.3 Control - Display Integration

Individual display instruments shall be located with related system controls and displays. Human factors principles shall be used in the configuration of the control board layout (See Reference 9.3.7).

4.3 Identification

4.3.1 Category 1

4.3.1.1 Derived Indication

In general, PAM Category 1 components and cables shall be identified by the unique identifier and separation suffix as assigned for their normal safety function from the sensor to the indicator and shall conform to the requirements of WB-DC-30-4 "Separation/Isolation" (Reference 9.3.1).

Where a PAM indication is derived from the reactor protection system, the signal to the indicator shall be isolated from the protection instrumentation at the protection rack. The isolated cables and indicators shall be designated "J" for PAM 1 or "K" for PAM 2 and shall follow the separation criteria in WB-DC-30-4. The isolated cables and indicators of the third PAM channel PAM 3, where required, shall be separated and identified with a suffix as specified in WB-DC-30-4. Indicators shall bear the same suffix as their cables.

Where an instrument loop is designed and installed specifically for a PAM Category 1 variable and has no other safety function the components and cables shall use the separation suffix "J" for PAM 1 and "K" for PAM 2 from the sensor to the indicator and shall be purchased, designed, qualified, and installed as 1E equipment.

4.3.1.2 Unique Identification in the MCR

Category 1 display devices shall be uniquely identified in the main control room. The symbol C1 shall be engraved on the nameplate. (Reference Table 2)

4.3.1.3 Control Diagrams

Category 1 PAM instrumentation loops shall be identified on the control diagrams (47W610-series) [PL-08-0503]. The symbol P1, P2, or P3 shall be placed on the drawing adjacent to the loop indicator symbol and the symbol shall be enclosed in a small box to accent its appearance. P1, P2, and P3 shall correspond with PAM 1, PAM 2, and PAM 3 respectively. (Reference Table 2)

4.3.1.4 Components

Each Category 1 variable loop component shall be identified on the instrument tabulation drawings (47B601-series) [PL-08-0504]. The words PAM 1, PAM 2, or PAM 3 shall be placed in the remarks field for each component that is required to meet Category 1 qualification requirements. (Reference Table 2) Those components shall only include the ones required to provide indication for the post accident monitoring function including transmitters, modifiers, power supplies, isolators, and indicators. Those components not required for indication such as isolated outputs to other systems, isolated local indicators, isolated controllers, and other devices not in the indicating circuit shall not be identified as PAM. The isolator separating non-PAM devices from the PAM portion of the loop shall be identified as PAM.

Each Category 1 and 2 variable in the 50.49 program shall be identified as PAM on the "10CFR 50.49 List" similar to the instrument tabulation except that only the word "PAM" is used. It is not required to identify cables as PAM on the "10CFR 50.49 List". (Reference Table 2)

CATEGORY	PAM DEVICE	I TAB	CONTROL DIAGRAM	MCR TAG	Q LIST	50.49 EQUIP*
1	CHANNEL 1	PAM 1	[P1]	C1	**	PAM
1	CHANNEL 2	PAM 2	[P2]	C1	**	PAM
1	CHANNEL 3	PAM 3	[P3]	C1	**	PAM
2	ANY	PAM C2	--	C2	***	PAM
3	ANY	PAM C3	--	--	--	--

* Not required for the cable "10CFR 50.49 List".
** Device shall be listed on the Q-list as "Q".
*** Device shall be listed on the Q list as "Q" if it is required to be in the 10CFR 50.49 program.

IDENTIFICATION SYMBOLS FOR PAM DEVICES
TABLE 2

4.3.1.5 Cables

PAM 1, PAM 2, and PAM 3 cables shall be identified and separated according to Section 4.4.5 of Reference 9.3.1 "Separation/Isolation."

4.3.1.6 Color Coded Nameplate

Nameplates and tags on Category 1 components shall be consistent with the requirements of DS-E1.2.2 "Electrical Equipment Nameplates, Sequoyah and subsequent Nuclear Plants," with the exception of the main control room tags which shall be consistent with DS-E18.1.20 "Instrumentation and Control, Labeling of Components." (Reference 9.3.10 and 9.3.11)

Cable tags and labeling shall be consistent with standard drawing SD-E15.3.4. (Reference 9.3.9)

4.3.2 Category 2

4.3.2.1 Unique Identification in the MCR

Category 2 display devices shall be uniquely identified in the main control room with the symbol C2 engraved on the nameplate or annunciator window. Where Category 2 variables are displayed on a computer screen, they shall be uniquely identified on the screen as Category 2 parameters. A special screen may be used to display all post accident monitoring variables in one display and in such cases it is not required to additionally identify variables as PAM where they are used on other screens for normal system requirements. (Reference Table 2)

4.3.2.2 Control Diagrams

There is no requirement to identify Category 2 devices on the 47W610-series drawings. [PL-08-0503]

4.3.2.3 Components

Each Category 2 variable component shall be identified on the instrument tabulation drawings (47B601-series) [PL-08-0504]. The words PAM C2 shall be placed in the remarks field for each component that is required to meet Category 2 qualification requirements (Reference table 2). Those components shall only include the ones required to provide indication for the post accident monitoring function including transmitters, modifiers, power supplies, isolators, and indicators. Those components not required for indication such as isolated local indicators or local controllers shall not be identified. Any isolators separating non-PAM devices from the PAM portion shall be identified as PAM. (Reference Table 2)

Each Category 2 variable that has been included in the 10CFR50.49 program shall be identified as PAM on the "10CFR 50.49 List" similar to the instrument tabulation except that only the word "PAM" is used. It is not required to identify cables as "PAM" on the cable "10CFR 50.49 List" (Reference Table 2)

4.3.2.4 Cables

Cables for Category 2 PAM circuits shall follow the requirements imposed by their normal system functions. Additionally, Category 2 non-Class 1E cables that are not in the 10CFR 50.49 program shall be identified as PAM in the computerized cable routing system (CCRS) data base in accordance with Reference 9.2.10.

4.3.2.5 Color Coded Nameplate

Nameplates and tags on Category 2 components shall be consistent with the requirements of DS-E1.2.2 "Electrical Equipment Nameplates, Sequoyah and subsequent Nuclear Plants," with the exception of the main control room tags which shall be consistent with DS-E18.1.24 "Human Factors Engineering" (Reference 9.3.10 and 9.3.11).

4.3.3 Category 3

4.3.3.1 Components

Each Category 3 variable component shall be identified in the Master Equipment List (MEL) on the instrument tab of the component specification template. The words "PAM C3" shall be placed in the remarks field for each component that is required to meet Category 3 qualification requirements (Reference Table 2). Those components shall only include the ones required to provide indication for the post accident monitoring function including transmitters, modifiers, power supplies, isolators, and indicators. Those components not required for indication such as isolated local indicators or local controllers shall not be identified. Any isolators separating non-PAM devices from the PAM portion shall be identified as PAM. Components required to meet Category 1 or Category 2 requirements should not be identified as Category 3 (PAM C3) in MEL.

5.0 TESTING AND SURVEILLANCE REQUIREMENTS

5.1 General Servicing, Testing, and Surveillance Requirements

5.1.1 Programs

Servicing, testing, and calibration programs shall be specified to maintain the capability of the monitoring instrumentation. For those instruments where the required interval between testing will be less than the normal time interval between generating station shutdowns, a capability for testing during power operation shall be provided.

5.1.2 Channel Removal From Service

Whenever a means for removing channels from service is included in the design, the design shall facilitate administrative control of the access to such removal means. The system shall be designed to permit any one channel to be maintained when required during power operation. During such operation, the active parts of the system need not themselves continue to meet the single failure criterion. As such, monitoring systems comprised of two redundant channels are permitted to violate the single failure criterion during channel bypass provided that acceptable reliability of operation can be otherwise demonstrated. The bypass time interval allowed for a maintenance operation is specified in the plant technical specifications. Bypass indication is applied either administratively or automatically.

5.1.3 Administrative Control

The design shall facilitate administrative control of the access to all setpoint adjustments, module calibration adjustments, and test points. Access to all setpoint adjustments, module calibration adjustments, and test points shall be administratively controlled.

5.1.4 Minimize Anomalous Indications

The monitoring instrumentation design should minimize the development of conditions that would cause meters, annunciators, recorders, alarms, etc., to give anomalous indications potentially confusing to the operator.

5.1.5 Repair

The instrumentation shall be designed to facilitate the recognition, location, replacement, repair, or adjustment of malfunctioning components or modules.

5.1.6 Capability for Verifying Operability

Means shall be provided for verifying the operability of the monitoring system channels. Where channels exhibit a dynamic response during normal plant operation or are required frequently for normal plant operation, verification of operability is inherent in the normal functioning of the channels. For channels which monitor a normally static parameter, provisions shall be included to allow periodic testing thereby verifying channel operability. Identification of malfunctions are adequately identified by cross checking between duplicate redundant channels or cross checking between channels that bear a known relationship to each other during normal plant operation.

5.2 Surveillance Requirements Category 1 and 2 Instrumentation

Category 1 channels shall have an out of service interval specified in the plant technical specifications. Category 2 and Category 3 channels do not have such a requirement unless required by the normal system requirements.

6.0 QUALITY ASSURANCE

6.1 Category 1 Variables

A description of the Quality Assurance Program for Category 1 instrumentation is given in TVA Nuclear Quality Assurance Plan TVA-NQA-PLN89-A (Reference 9.2.5). Each Category 1 device identified as a PAM 1, PAM 2, or PAM 3 component shall be listed in the Watts Bar Q-list and be designated as "Q". (Reference Table 2)

6.2 Category 2 Variables

For Category 2 instrumentation, the need for quality assurance requirements will be limited to components located in a harsh environment. In general, quality assurance program requirements are not required to be imposed on nonsafety-related Category 2 instrumentation unless the instrumentation is part of the 10 CFR 50.49 Environmental Qualification Program (see Section 3.4.2 and Reference 9.3.5). Devices identified as PAM C2 shall be included in the Watts Bar Q-list if they have been included in the 10 CFR 50.49 program and shall be designated as "Q." Other Category 2 devices shall follow normal system requirements. (Reference Table 2)

6.3 Category 3 Variables

The instrumentation should be of high-quality commercial grade and should be selected to withstand the specified environment. See Section 3.4.3.1 for a definition of "high quality." (Reference Table 2)

7.0 EXCEPTIONS

None

8.0 ADDITIONAL REQUIREMENTS

None

9.0 REFERENCES

9.1 Design Input

9.1.1 NRC Regulatory Guide 1.97 R2 and R3, "Instrumentation for Light-Water-Cooled Nuclear Power Plants to Assess Plant and Environs Conditions During and Following an Accident."

9.1.2 Deleted

9.1.3 American Nuclear Society Report ANS-4.5-1980, "Functional Requirements for Post Accident Monitoring Capability for the Control Room Operator of a Nuclear Power Generating Station." Paragraph 6.3.6.

9.1.4 NRC Regulatory Guide, 1.89 R1, "Qualification of Class 1E Equipment for Nuclear Power Plants."

9.1.5 Deleted

9.1.6 USNRC, Supplement 1 to NUREG-0737, "Requirements for Emergency Response Capability" Generic Letter 82-33, December 1982.

9.1.7 **WBN, "PAM Type A Variables Determination," (WBN-OSG4-047). [PL-08-0505]**

9.1.8 **WBN, "Basis for R.G. 1.97 R2 Type B and C Variables Determination," (WBN-OSG4-082). [PL-08-0506]**

9.1.9 **WBN, "R.G. 1.97 Type D Variable Selection." (WBN-OSG4-112) [PL-08-0507 thru -0516]**

9.1.10 Deleted.

9.1.11 **WBN, "Single Failure Analysis for R.G. 1.97 Category 1 Variables," (WBN-OSG4-051). [PL-08-0502]**

9.1.12 **WBN, "Determination of R.G. 1.97 Variables Requiring Trend Recording," (WBN-OSG4-076). [PL-08-0517]**

9.1.13 **WBN, "Determination of Devices Required for Indicating Safety Related Trends." (WBEVAR8902002) [PL-08-0518 and -0519]**

9.1.14 **WBN, "R.G. 1.97 Cat 1 and Type A, B, C, D Required Range and Acc Determ" (WBN-OSG4-111) [PL-08-0485 thru -0489]**

9.1.15 **WBN, "Range and Accuracy Requirements and Demonstrated Range of Instrumentation Provided to Measure Regulatory Guide 1.97 Type E Variables" (WBN-APS3-048) [PL-08-0501]**

9.1.16 Deleted

9.1.17 Deleted

9.1.18 **WBN, "R.G. 1.97 Determination of Containment Isolation Valves Required Position Indication (WBN-OSG4-114) [PL-08-0520 thru -0529]**

9.1.19 10 CFR50.49 "Environmental Qualification of Electric Equipment Important To Safety For Nuclear Power Plants"

9.1.20 10 CFR 50 Appendix A, "General Design Criteria for Nuclear Power Plants", Criteria 13, 19, and 64.

9.1.21 TVA letter to NRC dated August 31, 1990, Watts Bar Nuclear Plant (WBN) Conformance to Regulatory Guide (RG) 1.97 Revision 2 (L44 900831 804).

9.1.22 TVA letter to NRC dated October 29, 1991, Watts Bar Nuclear Plant (WBN) - Emergency Response Capability, Regulatory Guide 1.97, Revision 2 - Request for addition information response (T04 911029 848).

9.1.23 **WBN "PAM Instrumentation Evaluation and Verification Methodology, Standards, and Guidelines" (WBPEVAR8809048). [PL-08-0530 thru -0539]**

9.1.24 WBN Unit 1 and 2 - Supplemental Safety Evaluation Report (SSER)-9 (RIMS Number T03 920722 912)

9.1.25 TVA letter to NRC dated May 9, 1994, "Watts Bar Nuclear Plant (WBN) Units 1 and 2 - Regulatory Guide (RG) 1.97, Revision 2, Post-Accident Monitoring System (PAM) - Supplemental Response (RIMS T04940509901)

9.1.26 TVA letter to NRC dated April 21, 1995, "Watts Bar Nuclear Plant (WBN) Units 1 and 2 - Regulatory Guide (RG) 1.97, Revision 2, Post-Accident Monitoring System (PAM) - Supplemental Response (RIMS T04950421117)

9.1.27 WBN Units 1 & 2 - Supplemental Safety Evaluation Report NUREG-0847 Supplement No. 14 and 15.

9.1.28 Licensing Request, dated October 6, 1995, for Deviation 14. (RIMS No. T24 951006 479)

9.1.29 TVA Letter to NRC dated October 12, 1995, "Watts Bar Nuclear Plant (WBN) Unit 1 & 2" - Regulatory Guide (RG) 1.97, Revision 2, Post-Accident Monitoring System (PAM) - Supplemental Response (T04 951012 228)

9.1.30 **Regulatory Guide 1.97 - Determination of Containment Isolation valves Requiring Position Indication (WBNOSG4-114) [PL-08-0520 thru -0529]**

9.1.31 **Flooding Levels in the North and South Valve Vaults (WBNAPS2001) [PL-08-0540]**

9.2 Background

9.2.1 **Watts Bar Nuclear Plant Environmental Drawings 47E235-Series. [PL-08-0541]**

9.2.2 Watts Bar Nuclear Plant Final Safety Analysis Report.

9.2.3 R.G. 1.97, Revision 2, "Type A Variables Determination" (NEB 820402 268).

9.2.4 Memorandum from J. A. Raulston to F. W. Chandler (NEB 820322 260).

9.2.5 TVA-NQA-PLN89-A, TVA Nuclear Quality Assurance Plan

9.2.6 "Single Failure Analysis for PAM Variables" (NEB 820319 251).

9.2.7 Letter from J. A. Domer to E. Adensam dated September 19, 1985 (L44 850919 806).

9.2.8 Memorandum from L. M. Mills to E. Adensam dated January 30, 1984 (27 840130 016).

9.2.9 L. M. Mills letter to E. Adensam of USNRC dated June 7, 1983.

9.2.10 **EAI-3.15, "Cable and Conduit Record Development and Issue Procedure". [PL-08-0482]**

9.3 Design Criteria and Standards

9.3.1 WB-DC-30-4, "Separation/Isolation."

9.3.2 WB-DC-30-27, "AC and DC Control Power System."

9.3.3 WB-DC-40-31.2, "Seismic Qualification of Category I Fluid System Components and Electrical or Mechanical Equipment".

9.3.4 Deleted

9.3.5 WB-DC-40-54 "Environmental Qualification to 10CFR50.49".

9.3.6 WB-DC-40-64 "Design Basis Events Design Criteria" (Appendix B), "Single Failure"

9.3.7 WBN-DC-30-23 "Human Factors"

9.3.8 WB-DC-40-31.13 "Seismic Qualification of Category I(L) Fluid System Components and Electrical or Mechanical Equipment"

9.3.9 SD-E15.3.4 "Electrical Standard Drawing, Raceways, and CA&W Identification Tags (Sequoyah Nuclear Plant and all subsequent nuclear projects)

9.3.10 DS-E1.2.2 "Electrical Equipment Nameplates, (Sequoyah and subsequent nuclear plants)."

9.3.11 DS-E18.1.24 "Human Factors Engineering"

APPENDIX A
POST ACCIDENT MONITORING INSTRUMENTATION
COMPONENT QUALIFICATION MATRIX
(See Note)

Criteria	Category 1	Category 2	Category 3
Redundancy	At least 2 channels required	Not Required	Not Required
EQ (10 CFR 50.49)	Qualify Per WB-DC-40-54, components placed in 10CFR50.49 Program	Qualify per WB-DC-40-54, components placed in 10CFR50.49 Program	Not Required
Seismic	Must function after seismic event per WB-DC-40.31.2	Not Required	Not Required
QA	Yes - See Section 6.1	Yes - See Section 6.2	Not required
Power Supply	Class-1E Per WB-DC-30-27	Non-Class 1E, diesel or battery-backed	Non-Class 1E
Physical Separation	Required per WB-DC-30-4	Not required	Not Required
Electrical Separation	Non-1E circuit interfaces shall be through qualified isolation devices. (See WB-DC-30-4)	Not required	Not Required
Indication	Hardwired indicator (RVLIS and CET use plasma display and recorder), light	Meter, indicator light, computer display, or annunciator window	Meter, indicator light, computer display, or annunciator window
Special Labeling on MCR Board	C1 engraved on MCR label or window.	C2 engraved on MCR label or window.	Not Required
Testing and Maintenance	Required	Required	Required
Isolation Device Accessibility	Required	Required for loops with isolation devices	Not required
Recording	At least 1 channel per analog variable shall be recorded.	Effluent and area radiation monitors shall be recorded. Not required for others	Recorder or computer for meteorology.
	Where primary indication is provided by qualified meter or display, non-divisional trend recorders or computer based data acquisition & display system may be used for at least 1 of the redundant loops of the variables indicated in Table A-1. Recording shall be qualified to Category 2 requirements.		Not required for others.

Note: These are only post accident monitoring requirements. Normal system requirements may impose more stringent qualification requirements on components selected for PAM use and in those cases the most stringent requirements shall be met.

APPENDIX A

POST ACCIDENT MONITORING INSTRUMENTATION REQUIREMENTS

Table A-1 provides a listing of specific design requirements which are identified in Reference 9.1.6. The table represents minimum requirements. Additional instrumentation or qualification may be provided as a result of other plant, system, or design requirements. The topics described are:

- Variable Name
- Type and Category
- Redundant Channels
- Range, Range Units
- Environmental qualification (EQ)
- Seismic Qualification (SQ)
- Quality Assurance (QA)
- Power Supply

Type and Category

The variable's type(s) and associated category are identified. Entries in this column are derived from the Type selection calculations (References 9.1.7 through 9.1.10) and R.G. 1.97 (Reference 9.1.1).

Redundancy - The number of instrument channels required to monitor the variable. For Category 1 variables, the number of channels is determined from Section 3.4.1.2 and Reference 9.1.11. Diverse indication used to supplement or replace redundant information is also identified in Reference 9.1.11 and in Note 1.

Range - The required range and engineering units of the instrumentation are developed in the Type selection calculations, the required range and accuracy calculation, (Reference 9.1.14) or are identified in Reference 9.1.1.

Qualification (EQ) and Seismic (SQ)

Environmental and Seismic Qualification requirements are derived from the assignment of variable category. The qualification requirements for each category are listed in Section 3. The environmental operating times for Category 1 and Category 2 are specified in the Category and Operating Times Calculations.

Quality Assurance (QA) - A "Yes" entry indicates that the instrumentation must be included in the WBN QA program. A "No" entry indicates that the instrumentation is not required to be included in the QA program. The determination of "Yes" or "No" is made from the variable's assigned category.

Category 2 equipment requiring environmental qualification to 10CFR50.49 shall be included in the QA program, while other Category 2 equipment need not be placed in the QA program to satisfy requirements of this Design Criteria.

Power Supply - The minimum required source of electrical power for post accident monitoring is identified as follows:

1E - Class 1E power
Non-1E - Non-Class 1E*
Batteries installed in portable instrumentation

The requirement for electrical power source is derived from the variable's category and the design criteria of Section 3.

* Instrumentation shall be powered from 1E sources if system function requires it.

Deviations

The deviations are given in Appendix C. These deviations are found in References 9.1.21, 9.1.22, 9.1.25, 9.1.26 and 9.1.28. The deviation number is given in the "Notes" column of Table A-1.

Regulatory Guide 1.97
Post Accident Monitoring Variables List
Appendix A Table A-1
WB-DC-30-7

VAR NUM	Variable Name	Type/Category	Redundant Channels	Range From	Range To	Range Units	EQ	SQ	QA	Power Supply	Notes
1	Auxiliary Feedwater Flow	A1 D2	P1 P2 2 Channels Per Loop	0	700	GPM	YES	YES	YES	1E	(See Note 1)
2	Containment Lower Compartment Atmosphere Temperature	A1 D2	P1 P2 2 Channels	0	350	Deg F	YES	YES	YES	1E	Deviation #8
3	Containment Pressure (Narrow Range)	A1 B1 C1 D2	4 Channels (See Note 14)	-2	15	PSIG	YES	YES	YES	1E	Deviation #24 Note 8
4	Containment Radiation	A1 C3 E1	P1 P2 2 Upper 2 Lower	1	1.0E7	R/hr	YES	YES	YES	1E	Deviation #36
5	Containment Sump Level (Wide Range)	A1 B1 C1 D2	P1 P2	0	200	Inches	YES	YES	YES	1E	Deviation #32
6	Core Exit Temperature	A1 B1 C1 D2	P1 P2 8 PAM 1 8 PAM 2	200	2300	Deg F	YES	YES	YES	1E	Minimum of 16 Operable Thermocouples, 4 From Each Quadrant (See Note 1,8,&10) Deviation #30 & #37

Regulatory Guide 1.97
Post Accident Monitoring Variables List
Appendix A Table A-1
WB-DC-30-7

VAR NUM	Variable Name	Type/Category	Redundant Channels	Range From	Range To	Range Units	EQ	SQ	QA	Power Supply	Notes
7	Main Steam Line Radiation	C2 E2	1 Channel Per Steam Generator	1.0E-1	1.0E3	uCi/cc	YES	NO	YES	NON-1E	(See Note 7)
8	Nuclear Instrumentation (Source Range)	A1 B1 D2	P1 P2	1.0E-1	2.0E5	CPS	YES	YES	YES	1E	Note 8
9	RCS Pressurizer Level	A1 D1	P1 P2 P3	0	100	%	YES	YES	YES	1E	Note 8 & 12
10	RCS Pressure Wide Range	A1 B1 C1 D2	P1 P2 P3	0	3000	PSIG	YES	YES	YES	1E	Note 8 & 12
11	RCS Temperature T Cold	A1 B1 C1 D2	4 Channels 1 Per Loop	50	700	Deg F	YES	YES	YES	1E	(See Note 1 & 8) Deviation #1
12	RCS Temperature T Hot	A1 D2	4 Channels 1 Per Loop	50	700	Deg F	YES	YES	YES	1E	(See Note 1 & 8) Deviation #1
13	Refueling Water Storage Tank Level	A1 D2	P1 P2	0	100	%	YES	YES	YES	1E	Note 8
14	Steam Generator Level (Narrow Range)	A1 B1	P1 P2 P3 3 Channels Per Steam Generator	0	100	%	YES	YES	YES	1E	(See Note 1, 8 & 12

Regulatory Guide 1.97
Post Accident Monitoring Variables List
Appendix A Table A-1
WB-DC-30-7

VAR NUM	Variable Name	Type/Category	Redundant Channels	Range From	Range To	Range Units	EQ	SQ	QA	Power Supply	Notes
15	Steam Generator Pressure	A1 B1 D2	P1P2 2 Channels Per SG	0	1300	PSIG	YES	YES	YES	1E	Deviation #3 Notes 1 & 8
16	Subcooling Margin Monitor	A1 B2 C1 D2	P1 P2	200	35	Deg F	YES	YES	YES	1E	200 Deg. Subcooling to 35 Deg. Superheat Notes 8 & 10
17	Auxiliary Building Passive Sump Level	B1 C1	P1 P2	12.5	72.5	Inches	YES	YES	YES	1E	Note 8
18	Containment Isolation Valve Position Indication	B1 D2	1 Per Valve	Closed	Not CLOSED	N/A	YES	YES	YES	1E	Deviation #20 Note 15
19	Containment Hydrogen Concentration	B1 C1 D2	P1 P2	0	10	%	YES	YES	YES	1E	Deviation #2
20	Control Rod Position	D3	1 Channel Per Bank	0	235	Steps	NO	NO	NO	Non-1E	Deviation #35
21	Nuclear Instrumentation (Intermediate Range)	B1 D2	P1 P2	1.0E-8	200	% Power	YES	YES	YES	1E	Note 8
22	REACTOR VESSEL LEVEL	B1 C1 D2	P1 P2	See Note 5			YES	YES	YES	1E	(See Note 5, 8, & 10)
22a	Static Mode (Pumps Not Running)			0	100	%					0% Represents Reactor Vessel Empty. 100% represents reactor vessel full.

Regulatory Guide 1.97
Post Accident Monitoring Variables List
Appendix A Table A-1
WB-DC-30-7

VAR NUM	Variable Name	Type/Category	Redundant Channels	Range From	Range To	Range Units	EQ	SQ	QA	Power Supply	Notes
22b	Dynamic Mode (Pumps Running)			20	100	%					100% Represents Reactor Vessel Full
23	Containment Pressure (Wide Range)	C1	P1 P2	-5	60	PSIG	YES	YES	YES	1E	
24	Shield Building Vent (Noble Gas Activity)	C2 E2	1 Channel	1.0E-6	1.0E4	uCi/cc	YES	NO	YES	NON-1E	
25	ABGTS High Pressure Alarm	D2	1 Channel Per Fan	NA	-0.2	In.H20	YES	NO	YES	NON-1E	
26	ACAS Pressure	D2	1 Channel Per Train	0	150	PSIG	YES	NO	YES	NON-1E	
27	AFW Valve Status	D1	1 Channel Per Valve	Open	Closed	NA	YES	YES	YES	1E	
28	Accumulator Flow Alarm Valve Status	D3	1 Channel Per Valve	Open	Closed	NA	NO	NO	NO	NON-1E	Deviation #16
29	Accumulator Tank Level	D3	1 Channel Per Tank	7450	8080	GAL	NO	NO	NO	NON-1E	Deviation #15
30	Accumulator Tank Pressure	D3	1 Channel Per Tank	0	700	PSIG	NO	NO	NO	NON-1E	Deviation #6
31	Annulus Pressure	D2	1 Channel	-10	0	In. H20		YES	NO	YES	NON-1E
32	Aux. Feed Pump Turbine Steam Supply Isolation Valve Status	D3	1 Channel Per Valve	Open	Closed	NA	NO	NO	NO	NON-1E	

Regulatory Guide 1.97
Post Accident Monitoring Variables List
Appendix A Table A-1
WB-DC-30-7

VAR NUM	Variable Name	Type/Category	Redundant Channels	Range From	Range To	Range Units	EQ	SQ	QA	Power Supply	Notes
33	Battery Current (125V dc Vital)	D2	1 Channel Per Battery	-200	+600	AMPS	YES	NO	YES	N/A	
34	Bus Voltage (125V dc Vital)	D2	1 Channel Per Battery	75	150	VOLTS	YES	NO	YES	N/A	
35	Bus Voltage (480V Shutdown)	D2	1 Channel Per Train	0	600	VOLTS	YES	NO	YES	N/A	
36	Bus Voltage (6.9KV Shutdown)	D2	1 Channel Per Train	6400	7400	VOLTS	YES	NO	YES	NON-1E	Analog Scale, Digital Display
37	CCS Surge Tank Level	D3	1 Channel Per Train	0	100	%	NO	NO	NO	NON-1E	
38	Centrifugal Charging Pump Total Flow	D2	1 Channel	0	1000	GPM	YES	NO	YES	NON-1E	
39	Charging Header Flow	D3	1 Channel	0	110	GPM	NO	NO	NO	NON-1E	Deviation #17
40	Component Cooling Water To ESF Flow	D2	1 Channel Per Hx	0	5561	GPM	YES	NO	YES	NON-1E	
41	Component Cooling Water Supply Temperature	D2	1 Channel Per Train	30	150	Deg F	YES	NO	YES	NON-1E	Deviation #7
42	Condensate Storage Tank Water Level	D3	1 Channel Per Tank	0	385,000	GAL	NO	NO	NO	NON-1E	Not Primary Source of Aux. Feedwater. See Variable 27

Regulatory Guide 1.97
Post Accident Monitoring Variables List
Appendix A Table A-1
WB-DC-30-7

VAR NUM	Variable Name	Type/Category	Redundant Channels	Range From	Range To	Range Units	EQ	SQ	QA	Power Supply	Notes
43	Containment Air Return Status	D2	1 Channel Per Fan	On	Off	NA	YES	NO	YES	NON-1E	(Breaker Status)
44	Containment Cooling Valve Status	D3	1 Channel Per Valve	Open	Closed	NA	NO	NO	NO	NON-1E	
45	Containment Spray Flow	D2	1 Channel Per Train	0	4400	GPM	YES	NO	YES	NON-1E	
46	Containment Spray HX Outlet Temperature	D2	1 Channel Per HX	0	200	Deg F	YES	NO	YES	NON-1E	
47	Containment Sump Water Level (Narrow Range)	D3	1 Channel	2	66	Inches	NO	NO	NO	NON-1E	Deviation #12
48	Containment Sump Water Temperature	D2	1 Channel	50	400	Deg F	YES	NO	YES	NON-1E	Used RHR Inlet Temperature Loop
49	Diesel Generator Power	D2	1 Channel Per DG	0	4.84	MWATTS	YES	NO	YES	N/A	
50	Diesel Generator Volts	D2	1 Channel Per DG	0	6900	VOLTS	YES	NO	YES	N/A	
51	ECCS Valve Status	D2	1 Channel Per Valve	Open	Closed	NA	YES	NO	YES	NON-1E	
52	ERCW Header Flow	D2	1 Channel Per Header	0	20,000	GPM	YES	NO	YES	NON-1E	

Regulatory Guide 1.97
Post Accident Monitoring Variables List
Appendix A Table A-1
WB-DC-30-7

VAR NUM	Variable Name	Type/Category	Redundant Channels	Range From	Range To	Range Units	EQ	SQ	QA	Power Supply	Notes
53	ERCW Supply Temperature	D2	1 Channel Per Header	32	200	Deg F	YES	NO	YES	NON-1E	
54	Emergency Gas Treatment Damper Position	D2	1 Channel Per Damper	Open	Closed	NA	YES	NO	YES	NON-1E	
55	Emergency Ventilation Damper Status	D2	1 Channel Per Damper	Open	Closed	NA	YES	NO	YES	NON-1E	
56	Hydrogen Recombiner Status	D3	1 Channel Per Recombiner	On	Off	NA	NO	NO	NO	NON-1E	
57	Igniter Group Status	D3	1 Channel Per Group	On	Off	NA	NO	NO	NO	NON-1E	
58	Inverter Current (120V ac Vital)	D2	1 Channel Per Inverter	0	167	AMPS	YES	NO	YES	N/A	Local Indication Note 9 & 13
59	Inverter Voltage (120V ac Vital)	D2	1 Channel	115	125	VOLTS	YES	NO	YES	N/A	Local Indication Note 9 & 13
60	Letdown Flow	D3	1 Channel	0	144	GPM	NO	NO	NO	NON-1E	Deviation #18
61	MCR Pressure	D3	1 Channel	0	0.50	In. H20		NO	NO	NO	NON-1E
62	MCR Radiation Level	D2	1 Channel	1.0E-1	1.0E4	MR/Hr	YES	NO	YES	NON-1E	

Regulatory Guide 1.97
Post Accident Monitoring Variables List
Appendix A Table A-1
WB-DC-30-7

VAR NUM	Variable Name	Type/Category	Redundant Channels	Range From	Range To	Range Units	EQ	SQ	QA	Power Supply	Notes
63	Main Feedwater Flow	D3	1 Channel Per Loop	0	4,372,720	lb/hr	No	No	No	NON-1E	
64	Normal Emergency Boration Flow	D2	1 Channel	0	150	GPM	YES	NO	YES	NON-1E	Deviation #4
65	THIS LINE INTENTIONALLY LEFT BLANK										
66	Pressurizer Heater Status (Electric Current)	D2	1 Channel Per Group	0	50.5	AMPS	YES	NO	YES	NON-1E	(See Note 3)
67	Pressurizer Pressure Relief Valve Position (PORV, Block, and Code)	D2	1 Channel Per Valve	Closed	Not Closed	N/A	YES	NO	YES	NON-1E	
68	Pressurizer Relief Tank Level	D3	1 Channel	0	100	%	NO	NO	NO	NON-1E	
69	Pressurizer Relief Tank Pressure	D3	1 Channel	0	100	PSIG	NO	NO	NO	NON-1E	
70	Pressurizer Relief Tank Temperature	D3	1 Channel	50[2]	400[2]	Deg F	NO	NO	NO	NON-1E	Deviation #11
71	RCP Seal Injection Flow	D3	1 Channel Per RCP	0	13.2	GPM	NO	NO	NO	NON-1E	
72	RCS Head Vent Valve Status	D2	1 Channel Per Valve	Closed	Not Closed	NA	YES	NO	YES	NON-1E	
73	RHR Heat Exchanger Outlet Temperature	D2	1 Channel Per HX	50	400	Deg F	YES	NO	YES	NON-1E	Deviation #9

Regulatory Guide 1.97
Post Accident Monitoring Variables List
Appendix A Table A-1
WB-DC-30-7

VAR NUM	Variable Name	Type/Category	Redundant Channels	Range From	Range To	Range Units	EQ	SQ	QA	Power Supply	Notes
74	RHR Pump Flow (RHR System Flow)	D2	1 Channel Per Pump	0	5500	GPM	YES	NO	YES	NON-1E	
75	RHR Valve Status	D3	1 Channel Per Valve	Open	Closed	NA	NO	NO	NO	NON-1E	
76	Reactor Coolant Pump Status (Motor Current)	D3	1 Channel Per Pump	0	712	AMPS	NO	NO	NO	NON-1E	
77	Safety Injection Pump Flow	D2	1 Channel Per Pump	0	715	GPM	YES	NO	YES	NON-1E	
78	Safety Injection System Valve Status	D3	1 Channel Per Valve	Open	Closed	N/A	NO	NO	NO	NON-1E	
79	Spent Fuel Pool Level Alarm	D2	1 Channel	748'11-1/2	749'2-1/2	ft,in	YES	NO	YES	NON-1E	Range Reflects Low and High Alarm Setpoints
80	Spent Fuel Pool Temperature Alarm	D2	1 Channel		127	Deg F	YES	NO	YES	NON-1E	Upper range Is Alarm Setpoint
81	Steam Generator Blowdown Isolation Valve Status	D2	1 Channel Per Valve	Closed	Not Closed	NA	YES	NO	YES	NON-1E	
82	Steam Generator Level (Wide Range)	D1	4 Channels 1 Per SG	0	100	%	YES	YES	YES	NON-1E	Deviation #10 Notes 1 & 8
83	Main Steam Flow	D2	1 Channel Per SG	0	4,500,000	lb/Hr	YES	NO	YES	NON-1E	

Regulatory Guide 1.97
Post Accident Monitoring Variables List
Appendix A Table A-1
WB-DC-30-7

VAR NUM	Variable Name	Type/Category	Redundant Channels	Range From	Range To	Range Units	EQ	SQ	QA	Power Supply	Notes
84	Tritiated Drain Collector Tank Level	D3	1 Channel Per Train	4	96	%	NO	NO	NO	NON-1E	Local Indication Deviation #25
85	Volume Control Tank Level	D3	1 Channel	0	100	%	NO	NO	NO	NON-1E	Deviation #19
86	Waste Gas Decay Tank Pressure	D3	1 Channel Per Tank	0	150	PSIG	NO	NO	NO	NON-1E	Local Indication Deviation #23
87	Radiation Exposure Meters	E3	NA	NA	NA	NA	NA	NA	NA	NA	Deviation #22
88	Airborne Radiohalogens and Particulates	E3	Portable	1.0E-9	1.0E-3	uCi/cc	NO	NO	NO	NA	Airborne I-131 and particulates
89	Plant and Environs Radiation	E3	Portable	1.0E-3[2]	1.0E4[2]	R/hr	NO	NO	NO	NA	
90	Plant and Environs Radioactivity	E3	Portable	NA	NA	NA	YES	NO	YES	NA	Multi Channel Gamma Ray Spectrometer
91	Auxiliary Building Vent (Noble Gas)	E2	1 Channel	1.0E-6	1.0E-2	uCi/cc	YES	NO	YES	NON-1E	Deviation #13
92	Auxiliary Building Vent (Flow Rate)	E2	1 Channel	0	250,800	CFM	YES	NO	YES	NON-1E	
93	Auxiliary Building Vent (Particulates and Halogens	E3	1 Channel	Note 11	Note 11	uCi/cc	NO	NO	NO	NON-1E	Sampling with Onsite Analysis Capability Deviation #14

Regulatory Guide 1.97
Post Accident Monitoring Variables List
Appendix A Table A-1
WB-DC-30-7

VAR NUM	Variable Name	Type/Category	Redundant Channels	Range From	Range To	Range Units	EQ	SQ	QA	Power Supply	Notes
94	Condenser Vacuum Pump Exhaust Vent (Flow Rate)	E2	1 Channel	0	45	SCFM	YES	NO	YES	NON-1E	
95	Condenser Vacuum Pump Exhaust Vent (Noble Gas)	C3 E2	1 Channel	4.0E-7	2.4E3	uCi/cc	YES	NO	YES	NON-1E	Deviation #33
96	ERCW Radiation Monitors	E2	1 Channel Per Discharge Point	3.3E-4	1.65E-2	uCi/cc	YES	NO	YES	NON-1E	
97	POST ACCIDENT SAMPLE SYSTEM	E3	1 System	See below			NO	NO	NO	NON-1E	Sampling with Onsite Analysis Capability
97a	Reactor Coolant Chloride Concentration	E3	NA	1	20	ppm					Deviation #29
97b	Reactor Coolant Dissolved Hydrogen	E3	NA	10	2000	cc/kg (STP)					Deviation #21
97c	Reactor Coolant Dissolved Oxygen	E3	NA	1	20	ppm					Deviation #34
97d	Reactor Coolant Total Dissolved Gas	E3	NA	100	2000	cc/kg (STP)					Deviation #34
97e	Reactor Coolant Boron	E3	NA	50	6000	ppm					Deviation #26

Regulatory Guide 1.97
Post Accident Monitoring Variables List
Appendix A Table A-1
WB-DC-30-

VAR NUM	Variable Name	Type/Category	Redundant Channels	Range From	Range To	Range Units	EQ	SQ	QA	Power Supply	Notes
97f	Reactor Coolant PH	E3	NA	1	13	pH					
97g	Reactor Coolant Sample Activity	C3 E3	NA	10uCi/ml	10Ci/ml	Ci/ml					Deviation #5
97h	Reactor Coolant Gamma Spectrum	E3	NA	NA	NA	NA					Isotopic Analysis
98	CONTAINMENT AIR										
98a	Containment Air Hydrogen	E3	NA	0	10	% by Volume	NO	NO	NO	NON-1E	Also Measured by Hydrogen Analyzer Deviation #2
98b	Oxygen Content		NA	NA	NA	NA	NA	NA	NA	NA	Deviation #27
98c	Gamma Spectrum Sample	E3	NA	NA	NA	NA	NO	NO	NO	NA	Isotopic Analysis
99	Shield Building Vent Flow	E2	1 Channel Per Unit	0	28,000	CFM	YES	NO	YES	NON-1E	
100	Shield Building Vent Monitor (Particulate And Iodine)	E3	1 Channel Per Unit	1.0E-3	1.0E-2	uCi/cc	NO	NO	NO	NON-1E	Sampling with Onsite Analysis Capability
101	Steam Generator Discharge Vent (Flow Rate and Noble Gas)	E2	1 Channel Per Release Point	Note 4	Note 4	Note 4	YES	NO	YES	NON-1E	

Regulatory Guide 1.97
Post Accident Monitoring Variables List
Appendix A Table A-1
WB-DC-30-7

VAR NUM	Variable Name	Type/Category	Redundant Channels	Range From	Range To	Range Units	EQ	SQ	QA	Power Supply	Notes
102	METEROROLOGY										
102a	Vertical Temperature Difference	E3	1 Channel	-9	+18	Deg F	NO	NO	NO	NON-1E	
102b	Wind Direction	E3	1 Channel	0	360	Deg	NO	NO	NO	NON-1E	
102c	Wind Speed	E3	1 Channel	0	50	MPH	NO	NO	NO	NON-1E	Deviation #28
103	Radiation Exposure Rate	E3	Portable	1.0E-3	1.0E4	R/Hr	NO	NO	NO	NA	Deviation #31

APPENDIX A
POST ACCIDENT MONITORING VARIABLES LIST
TABLE A-1

Notes:

1. The following parameters are identified as diverse in Reference 9.1.11.

Parameter	Diverse Parameter
T (Hot)	Core Exit Temperature
Core Exit Temperature	T (Hot)
T (Cold)	SG Pressure
Auxiliary Feedwater Flow	SG NR/WR Level

2. Deleted

3. Pressurizer Heater Status required only for safety-related heater banks (backup heater 1A-A and 1B-B). Range is given in amps per element.

4. Recorder shall be provided for duration of release from all discharge points.

Noble Gas Activity	(See Main Steam Line Radiation, Var No. 7)
Steam Flow Rate	0 to 4945200 lb/hr PORV and Safety Valves
	0 to 63375 lb/hr To Aux. Feedwater Pump Turbine

5. Vessel level on the plasma display is the compensated actual vessel level derived from a microprocessor algorithm using the upper range, lower range, dynamic range differential pressure, wide range temperature, and wide range pressure.

6. Deleted.

7. Also monitors steam generator discharge vent noble gas activity. Required range of sensitivity specified is met by indication displaying in units of dose rate. **Conversion to required range is performed using conversion factor specified in Calc. WBNAPS3-048. [PL-08-0501]**

8. At least one of the redundant loops is trended on a non-divisional trend recorder qualified to meet Category 2 requirements.

9. Justification for local indication is found in Reference 9.1.22.

10. The Core Exit T/C Temperature (hottest), reactor vessel level, and Saturation Margin are trended on redundant Class 1E plasma displays (the last 30 minutes trending only) in the Main Control Room.

APPENDIX A
POST ACCIDENT MONITORING VARIABLES LIST
TABLE A-1

Notes:

11. The ranges for particulates and halogens: $5x10^{-10}$ to 10^{-5}uCi/cc for particulates, 10^{-9} to 10^{-4}uCi/cc for halogens (iodine).

12. The requirements for Category I variables which require a third independent channel to resolve ambiguity resulting when redundant displays disagree are being implemented at WBN as follows:

    The loop instrumentation for each channel is assigned to a redundant protection set (I, II, III, and IV) and electrical independence is maintained from sensor to display. Physical separation is maintained from the sensor to the isolator in the Auxiliary Instrument Room. From the isolator to the indicator in the Main Control Room, third channel (PAM 3) cables may be routed with either PAM 1 or PAM 2 cables (but not both) depending on its associated protection set.

13. The 120V AC Vital Inverter has a trouble alarm in the MCR which notifies of trouble on the bus.

14. Four channels are provided for this variable. Two channels are designated as PAM 1, and two channels are designated as PAM 2. Reference 9.1.11 evaluated three channels for this variable and determined that three channels are adequate for eliminating ambiguous readings.

15. In accordance with Technical Specification Bases B 3.3.3, PAM position indication is not required for containment isolation valves when the valves are closed and power removed. **MSIV bypass valves (Main Steam warming valves, 1-FCV-147, -148, -149, and -150) are normally closed during power operation (modes 1 and 2) with power removed. Consequently, position indication is not required for the valves in this configuration. The valves are powered and open during modes 3 and 4. Thus, position indication is required in this operational configuration. However, valves 1-FCV-147, -150, [PL-08-0483]** and associated position indication instrumentation are subject to flooding subsequent to a feedwater line break. **As evaluated in Reference 9.1.31 (WBNAPS2001, Rev. 4), the valves will close prior to flooding [PL-08-0540].** Flooding will result in power being removed from the valves and instrumentation. Consequently, valve position indication is only required for these valves prior to loss of power due to flooding.

APPENDIX B
TABLE B-1
POST ACCIDENT MONITORING VARIABLES UTILIZING THE
PLANT COMPUTER SYSTEM FOR MCR INDICATION

VAR NUM	VARIABLE NAME	TYPE/ CATEGORY	PRIMARY ELEMENT	COMPUTER ADDRESS
46	CONTAINMENT SPRAY HX OUTLET TEMPERATURE	D2	1-TE-72-31 1-TE-72-6	T0168A T0169A
47	CONTAINMENT SUMP WATER LEVEL (NARROW RANGE)	D3	1-LT-77-125	L0471A
53	ERCW SUPPLY TEMPERATURE	D2	1-TE-67-455 1-TE-67-456 2-TE-67-455 2-TE-67-456	T2612A T2613A T2614A T2615A
61	MCR PRESSURE	D3	0-PDT-31-1D	P4002A
66	PRESSURIZER HEATER STATUS	D2	1-EM-68-341A 1-EM-68-341D	E4003A E4004A
92	AUXILIARY BUILDING VENT (FLOW RATE)	E2	0-EM-90-300C	F2704A
94	CONDENSER VACUUM PUMP EXHAUST VENT (FLOW RATE)	E2	1-FT-2-256	F2700A
95	CONDENSER VACUUM PUMP EXHAUST VENT (NOBLE GAS)	C3 E2	1-RE-90-404A, 1-RE-90-404B	R9061A R9062A
101	STEAM GENERATOR DISCHARGE VENT FLOW RATE	E2	1-XE-1-300 A-F, 1-ZE-1-5 1-PT-1-5-G	F9051A
			1-XE-1-301 A-F, 1-ZE-1-12 1-PT-1-12-F	F9052A
			1-XE-1-302 A-F, 1-ZE-1-23 1-PT-1-23-F	F9053A
			1-XE-1-303 A-F, 1-ZE-1-30 1-PT-1-30-G	F9054A
			1-FT-1-17	F9050A
			1-FCV-1-15	FD9300
4	Containment Radiation	A1 C3 E1	1-RE-90-271 1-RE-90-272 1-RE-90-273 1-RE-90-274	R9018A R9019A R9020A R9021A
96	ERCW RADIATION MONITORS	E2	0-RE-90-133A 0-RE-90-134A 0-RE-90-140 0-RE-90-141	R1032A R1033A R1035A R1036A

[PL-08-0484]

SOURCE NOTES

SOURCE NOTE NUMBER	SOURCE NOTE TRACKING NUMBER/DOCUMENT	APPLICABLE SECTION
1	Letter to the NRC dated August 31, 1990 (L44 900831 804)	1.1
2	Letter to the NRC dated October 29, 1991 (T04 911029 848)	1.1, 3.4.1.6, 3.4.2.1, and App. A, Table A-1 (Pages 40 & 42)
3	CATD 22911-WBN-01	Various, not specifically noted in text

APPENDIX C

TABLE C

REG GUIDE 1.97 R2 DEVIATION AND
JUSTIFICATION FOR DEVIATIONS

DEVIATION 1

VARIABLES (11 AND 12)

Reactor Coolant System (RCS) Cold- and Hot-Leg Water Temperatures

DEVIATION FROM REGULATORY GUIDE (RG) 1.97 GUIDANCE

The range recommended in RG 1.97, Revision 2, is 50 to 750 F; the recommendation for Watts Bar Nuclear Plant (WBN) is 50 to 700 F.

JUSTIFICATION

The Reactor Coolant System Description N3-68-4001 states that the design temperature of the RCS is 650 F. The RG 1.97, Revision 2 recommended range is 50-750 F. However, NRC has revised its position on this range and RG 1.97, Revision 3, now recommends a range of 50-700 F will provide a 50 F margin over the design limit for both temperatures, which should provide the operator with adequate information for all transients. NRC concurs with WBN that an upper limit of 700 F is acceptable. (Reference: NRC letter from Youngblood to White dated July 24, 1986.)

DEVIATION FROM RG 1.97 GUIDANCE

RG 1.97, Revision 2, recommends that the RCS hot-leg water temperature (Variable 12) parameter be a B1 variable. WBN recommends that this be an A1 and D2 variable.

JUSTIFICATION

Type B variables provide information to indicate whether plant safety functions are being accomplished. WBN's position is that RCS pressure (Type A1, B1, C1 and D2), core exit temperature (Type A1, B1, C1, and D2), reactor vessel level (Type B1, C1, and D2), and subcooling margin (A1, B2, C1, and D2) are sufficient to monitor for adequate core cooling and the approach to superheat conditions in order to determine the margin by which the core cooling safety function is being accomplished. Therefore, it is WBN's position the RCS hot-leg water temperature be required only as a Type A1 and D2 variable.

DEVIATION 2

VARIABLE (19)

Containment Hydrogen Concentration

APPENDIX C

TABLE C
REG GUIDE 1.97 R2 DEVIATION AND
JUSTIFICATION FOR DEVIATIONS

DEVIATION FROM RG 1.97 GUIDANCE

The range recommended in RG 1.97, Revision 2, is 0 to 30 percent, whereas WBN has provided instrumentation for this variable with a range of 0 to 10 percent.

JUSTIFICATION

WBN has performed an analysis that shows the worst-case hydrogen concentration will be less than 4 percent post-loss-of-coolant (LOCA) with one of the hydrogen recombiners operating. Also, the hydrogen igniter system handles degraded core hydrogen releases as specified in 10 CFR 50.44 and will also keep the hydrogen concentration below 10 percent for these events. Therefore, the instrumentation will always be on scale. The hydrogen recombiner status is indicated by a PAM D3 variable.

DEVIATION 3

VARIABLE (15)

Steam Generator (SG) Pressure

DEVIATION FROM RG 1.97 GUIDANCE

The range recommended in RG 1.97, Revision 2, is 0 psig to 20 percent above the lowest safety valve setting (corresponding to 1422 psig at WBN); the recommended range for WBN is 0-1300 psig.

JUSTIFICATION

The design pressure for the main steam system at WBN is 1185 psig. The main steam safety valves are designed to maintain system pressure less than 110 percent of design pressure, which is 1303.5 psig. RG 1.97, Revision 2, recommends a range of 0 psig to 20 percent above the lowest safety valve set pressure, which corresponds to a range of 0 to 1422 psig. The highest main steam safety valve set pressure is 1224 psig and the accumulation pressure for each of the highest pressure safety valves is 1284 psig. Therefore, since the accumulation pressure is below 1300 psig and the 110 percent design pressure of approximately 1300 psig, the WBN recommended range of 0-1300 psig is adequate to cover the design range. The RG 1.97, Revision 2 range is well above the design requirements for the system and the ASME Code requirements for relief valves. Thus it is concluded that the WBN SG pressure range provides adequate feedback to the operator on SG pressure response to accidents or transients, and should be acceptable.

DEVIATION 4

VARIABLE (64)
Normal/Emergency Boration Flow (Boric Acid Charging Flow)

DEVIATION FROM RG 1.97 GUIDANCE
WBN recommends that this variable not be environmentally qualified (as required for RG 1.97, Revision 2, Category 2 variables) since other variables perform the required emergency boration monitoring function.

APPENDIX C

TABLE C
REG GUIDE 1.97 R2 DEVIATION AND
JUSTIFICATION FOR DEVIATIONS

JUSTIFICATION

The flow path monitored by this variable is a normally isolated path that requires operator action to utilize. This path is used for manual boration of the RCS. This path is not required for mitigation of any event. Postaccident reactivity control is accomplished by the Emergency Core Cooling System (ECCS) injecting borated water from the refueling water storage tank (RWST) into the RCS. Manual boration is not utilized. The ECCS flow is monitored by the centrifugal charging pump total flow (high pressure injection flow), the safety injection (SI) pump flow (low pressure injection flow), and the residual heat removal (RHR) pump flow (RHR System flow)/ These three variables are in the environmental qualification program and meet the 110 percent design flow measurement requirement.

DEVIATION 5

VARIABLE 97g

Radiation Level in Circulating Primary Coolant (Reactor Coolant Sample Activity).

DEVIATION FROM RG 1.97 GUIDANCE

This variable has been identified in RG 1.97, Revision 2, as Type C, Category 1, whereas WBN has identified this variable as Type C, Category 3.

JUSTIFICATION

For the fuel cladding integrity safety function, RG 1.97 recommends core exit temperature and RCS activity as key variables and gamma spectrum analysis of the reactor coolant as a Category 3 variable. Core-exit temperature provides primary indication of a significant breach or potential breach of fuel throughout the emergency instructions (EIs), functional restoration guidelines (FRGs), and Final Safety Analysis Report (FSAR). Therefore, this variable was included as the Category 1 or key indication. Radiation level in circulating primary coolant was considered; however, it indicates conditions following fuel damage and provides less timely information. Thus, this variable is considered to be less useful to the operators and was included as a backup variable. TVA meets the intent of the RG 1.97 recommended range by monitoring this variable using the gross activity analysis of primary coolant samples taken in the post accident sampling facility.

DEVIATION 6

VARIABLE (30)

Safety Injection (Cold-Leg) Accumulator Tank Pressure

DEVIATION FROM RG 1.97 GUIDANCE

RG 1.97, Revision 2, recommends that the pressure instruments meet the D2 criteria with a range of 0 to 750 psig. WBN recommends retaining this variable as D3, with a range of 0 to 700 psig.

APPENDIX C

TABLE C

REG GUIDE 1.97 R2 DEVIATION AND
JUSTIFICATION FOR DEVIATIONS

JUSTIFICATION

The primary function of these instruments is to monitor the preaccident status of the accumulators to ensure the passive safety function of the system. By design they do not perform any safety function postaccident. Other seismically and environmentally qualified instruments such as RCS pressure can be monitored to determine if a cold-leg accumulator injection has occurred.

The design pressure of the cold-leg accumulator tanks is 700 psig. The precautions, limitations, and setpoints (PLS) limit the nitrogen cover gas to a maximum pressure of 632 psig. Therefore, WBN's position is that monitoring of the tanks to pressures higher than the relief setpoints is not needed. WBN considers the existing range of 0 to 700 psig to the acceptable.

DEVIATION 7

VARIABLE (41)

Component Cooling Water (CCW) Temperature to Engineered Safety Features (ESF) Equipment

DEVIATION FROM RG 1.97 GUIDANCE

The range recommended in Rg 1.97, Revision 2, is 32 to 200 F; the recommendation for WBN is 30 to 150 F.

JUSTIFICATION

WBN analysis has determined that the highest expected CCW temperature (post-LOCA safety injection) is 120 F.

An upward trend of the CCW temperature above 120 F could be readily detected and would be expected to be slow moving. Thus, there would be sufficient time well within the 150 F upper range to alert the operator to the condition and the need to check other PAM-related variables for potential manual actions.

DEVIATION 8

VARIABLE (2)

Containment Atmosphere Temperature (Containment Lower Compartment Atmosphere Temperature)

DEVIATION FROM RG 1.97 GUIDANCE

The range for this variable is recommended to be 40 to 400 F in accordance with RG 1.97, Revision 2. WBN recommends the range to be 0 to 350 F.

APPENDIX C

TABLE C
REG GUIDE 1.97 R2 DEVIATION AND
JUSTIFICATION FOR DEVIATIONS

JUSTIFICATION

WBN is an ice condenser plant and, therefore, has a lower containment temperature post-accident than dry containments. The maximum temperature expected post-LOCA at WBN is 250 F as compared to 275 to 290 F for dry containments. The maximum temperature expected at WBN after a steam line break is 327 F as compared to 380 to 450 F for dry containments. The minimum expected containment atmospheric temperature will be 60 F. This minimum temperature is due to the minimum allowable RWST water temperature which could be sprayed into containment by inadvertent operation of the containment spray. Therefore, it is WBN's position that a range of 0 to 350 F is adequate.

DEVIATION 9

VARIABLE (73)

Residual Heat Removal (RHR) Heat Exchanger Outlet Temperature

DEVIATION FROM RG 1.97 GUIDANCE

The range recommended in RG 1.97, Revision 2, is 32 to 350 F; the recommendation for WBN is 50 to 400 F.

JUSTIFICATION

NRC letter from Youngblood to White dated July 24, 1986, states that RG 1.97, Revision 3, increased the minimum required range of this variable to 40 F and that WBN's range of 50 to 400 F was acceptable due to the minor deviation.

DEVIATION 1Q

VARIABLE (82)

SG Level Wide Range

DEVIATION FROM RG 1.97 GUIDANCE

RG 1.97, Revision 2, recommends this variable as a Type D, Category 1 variable, which requires redundancy in the instrumentation. WBN recommends this variable be Category 1, Type D, but utilizing only one wide range transmitter per SG.

JUSTIFICATION

SG wide range level indication is utilized as a diverse variable to auxiliary feedwater (AFW) flow for gross indication of flow to the SGs. The WBN AFW monitors are Types A1 and D2. WBN's position is that since SG wide range level is only used as a backup to redundant AFW flow monitors, it does not require redundancy.

APPENDIX C

TABLE C
REG GUIDE 1.97 R2 DEVIATION AND
JUSTIFICATION FOR DEVIATIONS

DEVIATION 11

VARIABLE (70)

Quench Tank (Pressurizer Reflief Tank [PRT]) Temperature

DEVIATION FROM RG 1.97 GUIDANCE

The range for this variable is recommended to be 50 to 750 F in accordance with RG 1.97, Revision 2. WBN recommends the range to be 50 to 400 F.

JUSTIFICATION

The purpose of this variable is to monitor operation. The PRT rupture disk is designed to operate between 86-100 psig. Assuming that the rupture disk operates at 100 psig and the pressurizer is at 2500 psig at saturated conditions, the maximum temperature during discharge when all valves in the line are open could be approximately 350 F. High temperature due to discharges or leakage into the tank form the pressurizer or other sources would produce an early upward trend in PRT temperature above normal. Temperatures far below the RG 1.97 recommended temperature of 750 F or the 400 F WBN recommended temperature would be sufficient to alert the operator to an abnormal condition and the potential need to check related PAM variables. Therefore, the recommended range of 50 to 400 F is sufficient to permit the operator to monitor plant operation.

DEVIATION 12

VARIABLE (47)

Containment Sump Water Level (Narrow Range)

DEVIATION FROM RG 1.97 GUIDANCE

RG 1.97, revision 2, recommends this variable as Types B and C, Category 2. WBN recommends this variable as Type D, Category 3.

JUSTIFICATION
The operator does not monitor this variable to perform any required safety function. In addition Chapter 15 of the FSAR takes no credit for monitoring this variable for any design bases event. This variable is used primarily to monitor RCS leakage. This variable, along with the lower containment atmosphere particulate radioactivity monitoring systems are used to detect RCS leakage. These small leakages do not cause plant perturbations or detect RCS leakage. These small leakages do not cause plant perturbations or transients that would cause a reactor trip or SI signal to be generated. Therefore, the operator does not enter the emergency procedures to detect or mitigate these leakages and corrective actions based on the emergency procedures and the use of PAM equipment are inappropriate. However, for the purpose of monitoring gross leakage, this variable will be designated as a Type D3 variable.

The containment sump water level (wide range) is a Type A1, B1, C1, and D2 variable and is used at WBN to monitor the containment water level for the mitigation of accidents.

APPENDIX C

TABLE C

REG GUIDE 1.97 R2 DEVIATION AND
JUSTIFICATION FOR DEVIATIONS

DEVIATION 13

VARIABLE (91)

Auxiliary Building Exhaust Vent Radiation Level - Noble Gas Release

DEVIATION FROM RG 1.97 GUIDANCE

The range recommended in RG 1.97, Revision 2, is 10^{-6} to 10^{3} microcuries/cubic centimeter (cc); the recommendation for WBN is 10^{-6} to 10^{-2} microcuries/cc.

JUSTIFICATION

The Auxiliary Building vent monitor is provided to continuously monitor the airborne radioactivity released through the Auxiliary Building exhaust vent. An accident causing Auxiliary Building radiation level to be high will cause all ventilation paths exhausting into the Auxiliary Building vent duct to automatically close and the Auxiliary Building gas treatment system to be activated. Because the isolation function occurs before accident-range activity is reached, a normal-range monitor only is employed to monitor activity in the Auxiliary Building exhaust vent. Therefore, the recommended range of 10^{-6} to 10^{-2} microcuries/cc is adequate for detecting and measuring noble gas concentrations.

DEVIATION 14

VARIABLE (93)

Auxiliary Building Exhaust Vent Radiation Level - Particulates and Halogens

DEVIATION FROM RG 1.97 GUIDANCE

The range recommended in RG 1.97, Revision 2, is 10^{-3} to 10^{2} microcuries/cc; the recommendation for WBN is $5x10^{-10}$ to 10^{-5} for particulates and 10^{-9} to 10^{-4} microcuries/cc for halogens (iodine).

JUSTIFICATION

The Auxiliary Building Exhaust Vent monitor is provided to continuously monitor the radioiodine and particulate radioactivity released through the Auxiliary Building vent. A Design Basis Fuel Handling Accident in the Auxiliary Building or a Design Basis LOCA in the Reactor Building will cause all ventilation paths exhausting into the Auxiliary Building vent duct to automatically close and the Auxiliary Building Gas Treatment system to be activated. Because the isolation function occurs before accident range activity is reached, a normal range monitor only is employed to monitor activity in the Auxiliary Building vent. Therefore, the recommended range of $5x10^{-10}$ to 10^{-5} microcuries/cc for particulates and 10^{-9} to 10^{-4} microcuries/cc for halogens is adequate for detecting and measuring normal operation particulate and radioiodine concentrations. Laboratory analysis of collected samples allows measurement over a wide range.

APPENDIX C

TABLE C
REG GUIDE 1.97 R2 DEVIATION AND
JUSTIFICATION FOR DEVIATIONS

DEVIATION 15

VARIABLE (29)

Safety Injection (Cold-Leg) Accumulator Tank Level

DEVIATION FROM RG 1.97 GUIDANCE

The range recommended in RG 1.97, Revision 2, is 10 to 90 percent volume using a D2 variable. WBN recommends a range of 75 to 82 percent volume, using a D3 variable.

JUSTIFICATION

The present accumulator tank level indication range of 7632 to 8264 gallons corresponds to 75 to 82 percent of volume.

Postaccident level does not serve any safety function since the passive injection of the cold-leg accumulators (CLA) into the RCS would be observed through other qualified instrumentation such as RCS pressure. Hence, level instrumentation which meets the requirements of a D3 variable is appropriate.

DEVIATION 16

VARIABLE (28)

Cold-Leg Accumulator Isolation Valve Position Indication

DEVIATION FROM RG 1.97 GUIDANCE

RG 1.97, Revision 2, recommends that the position indication of the CLA isolation valve be qualified to D2 requirements. WBN recommends designating this variable as D3.

JUSTIFICATION

The CLA isolation valves do not need to change from their normally open position in the event of an accident which requires CLA injection. These valves will already have been opened during startup soon after the RCS pressure sufficiently exceeds the CLA normal operating pressure. Then the associated motive power will be removed.

There is no accident event in which instantaneous emptying of all four CLAs could cause inadequate core cooling or cold overpressurization of the RCS. The steamline break is the only Condition IV event other than a LOCA that causes a rapid depressurization of the RCS. However, even for that accident the RCS depressurizes rapidly down to 900 psi where the pressure stabilizes or rises. Further depressurizations are at a much more controlled rate, giving the operator time to react.

For a Condition III event, such as a 4- or 6-inch break (small break LOCA), the depressurization of the RCS may cause emptying of the CLA. Even under such cases, emptying the CLAs will not cause inadequate core cooling or cold overpressurization of the RCS.

APPENDIX C
TABLE C

REG GUIDE 1.97 R2 DEVIATION AND
JUSTIFICATION FOR DEVIATIONS

Furthermore, closing the CLA isolation valves is not a safety function for accident mitigation that necessitates environmentally qualified valve position indication. Hence, there is no need to environmentally qualify these valves.

WBN recommends designating the position indication of the CLA isolation valve as a D3 variable.

DEVIATION 17

VARIABLE (39)

Chemical and Volume Control System (CVCS) Makeup Flow-In (Charging Header Flow)

DEVIATION FROM RG 1.97 GUIDANCE

The RG 1.97, Revision 2, recommends that the design flow should be monitored using a D2 variable. WBN recommends designating this variable as D3.

JUSTIFICATION
This variable is used to monitor operation. The charging flow is isolated on a SI signal. While certain events may produce a harsh environment for the flow instruments, makeup flow is not required to mitigate these events. Thus, the installed instrumentation qualified to D3 requirements is appropriate for the intended monitoring function at WBN.

DEVIATION 18

VARIABLE (60)
CVCS Letdown Flow-Out (Let Down Flow)

DEVIATION FROM RG 1.97 GUIDANCE
RG 1.97, Revision 2, recommends 0 to 110 percent design flow monitoring using D2 variables to monitor flow. TVA recommends this variable as D3.

JUSTIFICATION
This variable is used to monitor normal operation. The letdown flow isolation valves close on a SI signal, low pressurizer level, or Phase A isolation signal. While certain events may produce a harsh environment for the flow instruments, letdown flow is not required to mitigate these events. Thus, the installed instrumentation qualified to D3 requirements is appropriate for the intended monitoring function at WBN.

DEVIATION 19

VARIABLE (85)
Volume Control Tank (VCT) Level

DEVIATION FROM RG 1.97 GUIDANCE
The RG 1.97, Revision 2, recommends that the VCT level be monitored from top to bottom with a D2 variable. TVA recommends using a D3 variable and a range slightly less than top to bottom.

APPENDIX C

TABLE C

REG GUIDE 1.97 R2 DEVIATION AND
JUSTIFICATION FOR DEVIATIONS

JUSTIFICATION

The VCT is isolated on a SI signal. While certain events may produce a harsh environment for the level instruments, the VCT itself is not required to mitigate the events. Hence the D3 type and category variable is appropriate for its performance requirements.

The present VCT indication reads from 0 to 100 percent over a range of 70 inches which is entirely within the approximately 80-inch cylindrical portion of the tank. Extending the range to include the top and bottom hemispherical portions of the tank would result in nonlinear readings at the extreme ends of the scale. Including the hemisphere and the remaining 10 inches of the vertical cylinder would not add significantly to monitoring capability.

DEVIATION 20

VARIABLE 18

Containment Isolation Valve (CIV) Position

DEVIATION FROM RG 1.97 GUIDANCE

RG 1.97, Revision 2, recommends that the CIV position indication should meet the requirements of a B1 variable (which encompasses position indication for the duration of the event). WBN's reactor coolant system (RCS) letdown CIVs flow control valves (FCV)-62-72, -73, -74, and -76 will be submerged postaccident inside containment. These valves' limit switches are not qualified for operation during post submergence.

In addition, safety relief valves which are also designated as CIVs are not monitored for position.

JUSTIFICATION

The RCS letdown CIVs close on an SI signal, Phase A signal, or a low pressurizer level signal. The valves and associated position indication limit switches are qualified to perform their intended safety functions prior to being submerged. The limit switch for the valve position indication is located on the valve and hence subject to submergence. The limit switch is not qualifiable for submergence. The limit switch performs its intended safety function well before submergence. Valve positions are indicated both in the Main Control Room and the Technical Support Center.

Once the limit switches are flooded, it must be assumed that the control circuit fuses will be blown and position indication will be lost. This indication circuit, however, is isolated from the other CIV indication circuits.

The solenoids for these valves are included in WBN's environmental qualification (EQ) program and will vent to automatically close the FCVs as required under accident conditions. An analysis in WBN's EQ binder demonstrates that once closed, a submergence failure of the solenoid will not cause the FCV to change position. Hence the valves are considered closed and no further indication is required.

APPENDIX C

TABLE C

REG GUIDE 1.97 R2 DEVIATION AND
JUSTIFICATION FOR DEVIATIONS

For safety relief valves, position indication is not necessary since these valves are constantly in their containment isolation position (i.e., closed). Verification that these valves have accomplished their containment isolation function is not necessary since they do not change position to provide this function.

DEVIATION 21

VARIABLE (97B)

Reactor Coolant Dissolved Hydrogen

DEVIATION FROM RG 1.97 GUIDANCE

The RG 1.97, Revision 2 (refer to Table 2, Type E variables), recommends that primary coolant grab sample capability exists for hydrogen analysis.

JUSTIFICATION

The WBN postaccident sampling facility (PASF) will have two independent methods for measuring dissolved hydrogen in the RCS. It will have the capability to measure dissolved hydrogen in the range from 10-2000 cc/kg with an inline ion chromatograph. In addition, it will have a total dissolved gas analyzer to measure the total dissolved gas in the pressurized coolant in the range from 100-2000 cc/kg. Dissolved oxygen will be separately measured with a dissolved oxygen analyzer. These latter two measurements provide another determination of the dissolved hydrogen. The two available methods provide sufficient backup monitoring capability for dissolved hydrogen and will eliminate the need for handling highly radioactive, undiluted, pressurized reactor coolant grab samples. Diluted, unpressurized reactor coolant grab samples may be obtained as necessary at the PASF for other analyses.

DEVIATION 22

VARIABLE (87)

Radiation Exposure Meters

DEVIATION FROM RG 1.97 GUIDANCE

Rg 1.97, Revision 2, recommends that Type E radiation exposure meters with continuous indication be available at fixed locations. No category is specified. WBN recommends not classifying these meters as a RG 1.97 variable.

JUSTIFICATION

RG 1.97, Revision 2, was issued with an outstanding question regarding the practicality of deploying radiation monitors at fixed locations. A study (NUREG/CR-2644) concluded that it is unlikely that a few fixed-station area monitors could provide sufficiently reliable information to be of use in detecting releases from unmonitored containment release points.

APPENDIX C

TABLE C

REG GUIDE 1.97 R2 DEVIATION AND
JUSTIFICATION FOR DEVIATIONS

NRC agreed with this conclusion and in Revision 3 of RG 1.97 deleted the environs radiation monitors from the pressure water reactor (PWR) table of variables.

TVA thereby requests a deviation from RG 1.97, Revision 2 specification of this Type E variable.

DEVIATION 23

VARIABLE (86)

Waste (Radioactive) Gas Holdup Tank Pressure (Waste Gas Decay Tank Pressure)

DEVIATION FROM RG 1.97 GUIDANCE

RG 1.97, Revision 2, recommends that waste (radioactive) gas holdup tank pressure be monitored from 0 to 150 percent of design pressure. WBN recommends that the pressure be monitored from 0 to 100 percent of design pressure (150 psig).

JUSTIFICATION

The design pressure of the waste gas decay tanks is 150 psig. The waste gas decay tanks are equipped with pressure relief valves set at 150 psig. Therefore, WBN's position is that monitoring of the tanks to pressures higher than the relief setpoints is not necessary. WBN considers the existing range of 0 to 100 percent of design to be acceptable.

DEVIATION 24

VARIABLE (3)

Containment Pressure (Narrow Range)

DEVIATION FROM RG 1.97 GUIDANCE

RG 1.97, Revision 2, recommends Type B and Type C variable which covers a range of -5 psig to the design pressure. WBN recommends a lower range of -2 psig using a Type A1, B1, C1, and D2 variable (with no deviation to the upper range).

JUSTIFICATION

The WBN containment vessel design net external pressure is 2 psig. Inadvertent containment spray initiation will cause rapid depressurization inside containment. However, for this event the pressure will drop below the minimum design pressure. Another event that can cause a depressurization inside containment is continuous inadvertent air return fan operation. However, this will occur slowly enough to allow the operators sufficient time to observe trending of containment depressurization and afford ample opportunity to terminate the air fan operation and manually open the lower compartment pressure reflief line.

APPENDIX C

TABLE C

REG GUIDE 1.97 R2 DEVIATION AND
JUSTIFICATION FOR DEVIATIONS

In addition, the containment pressure wide range instrumentation (-5 to 60 psig) overlaps the -2 psig lower range instrumentation. The -2 psig value is the lower design limit and is consistent with the use of upper range design limit of 15 psig. Hence, a lower range value of -2 psig is appropriate for WBN.

DEVIATION 25

VARIABLE (84)

High Level Radioactive Liquid Tank Level (Tritiated Drain Collector Tank)

DEVIATION FROM RG 1.97 GUIDANCE

RG 1.97, Revision 2, recommends a range for this variable from top to bottom. WBN recommends a range from 11 to 133 inches from the bottom of the tank.

JUSTIFICATION

The capacity of the tank is approximately 24,700 gallons. The quantity of water that is excluded from the range of the indication is approximately 1000 gallons at the bottom and an equal amount at the top. Thus, the present range is capable of monitoring approximately 22,700 gallons which is about 92 percent of the total capacity of the tank. TVA thereby considers the proposed range for the existing level taps (11 to 133 inches from the bottom of the tank) to be sufficient for indicating postaccident storage volume for this tank.

DEVIATION 26

VARIABLE (97E)

Reactor Coolant Boron

DEVIATION FROM RG 1.97 GUIDANCE

RG 1.97, Revision 2, recommends that the analysis range for boron content in the primary coolant and sump be between 0 to 6,000 parts per million (ppm) and be monitored with a Type B3 and E3 variable. WBN recommends that the range be between 50 to 6,000 ppm and be monitored with a Type E3 variable.

JUSTIFICATION

For boron concentrations below 500 ppm, the tolerance for WBN's instrumentation would be limited to plus or minus 50 ppm. This tolerance band is considered by WBN to be acceptable for ensuring that postaccident shutdown margin is maintained. WBN's position is that the current range capability for boron analysis (50 to 6,000 ppm) is sufficient.

APPENDIX C

TABLE C

REG GUIDE 1.97 R2 DEVIATION AND
JUSTIFICATION FOR DEVIATIONS

RCS boron concentration used in conjunction with control rod position indication and RCS cold-leg temperature only provides indirect indication. These are backup variables for monitoring reactivity control. Neutron flux is a direct variable that allows the operator to determine if reactivity is under control (i.e., the reactor has tripped and the core is in a subcritical condition). Neutron flux is a Type B1 and D2 variable at WBN. Therefore, the boron concentration is not required for direct reactivity control determination. It is available as a Type E3 variable for backup verification of reactivity control.

DEVIATION 27

VARIABLE (98b)

Containment Air Oxygen Content

DEVIATION FROM RG 1.97 GUIDANCE

RG 1.97, Revision 2 recommends a measurement range of 0-30 percent volume for containment air oxygen content. WBN recommends that the measurement of this variable should not be required.

JUSTIFICATION

The measurement of containment air oxygen content is not required by NUREG-0737. Following a design basis LOCA at WBN, the combustible gas control system will operate as described in System Description N3-83-4001 R1 to maintain the hydrogen concentration in containment below the lower flammability limit of 4 percent volume. Therefore, the oxygen concentration in containment is not important for combustion control. A measurement of the containment oxygen concentration is not needed for any other reason after an accident.

DEVIATION 28

VARIABLE (102c)

Meteorology (Wind Speed)

DEVIATION FROM RG 1.97 GUIDANCE

RG 1.97, Revision 2, recommends that the wind speed measurement range be 0 to 67 mph. WBN recommends that the range be 0 to 50 mph.

JUSTIFICATION

RG 1.97, Revision 3, recommends that the wind speed measurement range be 0 to 50 mph. Also, NRC letter from Youngblood to White dated July 24, 1986, states that since WBN meets the range recommended in RG 1.97, Revision 3, the 0 to 50 mph range is acceptable.

APPENDIX C

TABLE C

REG GUIDE 1.97 R2 DEVIATION AND
JUSTIFICATION FOR DEVIATIONS

DEVIATION 29

VARIABLE 97a

Reactor Coolant Chloride Concentration

DEVIATION FROM RG 1.97 GUIDANCE

RG 1.97, Revision 2, recommends a range of 0 to 20 ppm for reactor coolant chloride concentration. WBN recommends a range of 1 to 20 ppm.

JUSTIFICATION

The WBN recommended range of 1 to 20 ppm accurately represents TVA's commitment to the NRC.

DEVIATION 30

VARIABLE 6

DEVIATION FROM RG 1.97 GUIDANCE

The two channels/trains of the core thermocouple system at the bundling at the common reactor vessel refueling cavity wall penetration do not meet the separation requirement of RG 1.97.

JUSTIFICATION

The design and the installation of the mineral insulated cables used for the core thermocouples within the reactor cavity was completed prior to upgrading the system to satisfy RG 1.97 requirements. The design within the refueling cavity is acceptable because:

1. Only a small self-generated signal exists in the cabling from the thermocouples to the Incore Instrument Room and, therefore, no chance exists for a postulated propagating fault.

2. Due to the interference provided by the rod control mechanisms and rod position indicator stack, no likelihood exists for rendering all thermocouples inoperable.

APPENDIX C

TABLE C

REG GUIDE 1.97 R2 DEVIATION AND
JUSTIFICATION FOR DEVIATIONS

DEVIATION 31

VARIABLE 103

DEVIATION FROM RG 1.97 GUIDANCE

RG 1.97, Revision 2, includes exposure rate monitors as Type E (Category 2) variables. These monitors are required to have a range of 1.0 E-1 Rem per hour (R/hr) to 1.0 E4 R/hr and are to be located inside buildings or areas where access is required to service equipment important to safety. The area monitors are intended for use in detection of significant releases, release assessment, and long-term surveillance.

RG 1.97, Revision 2, also included radiation exposure rate monitors, with ranges of 1.0 E-1 R/hr to 1.0 E4 R/hr as Type C variables (these monitors were to be installed inside buildings or areas in direct contact with primary containment where penetrations and hatches were located). This variable was removed from RG 1.97 in Revision 3 and will not be addressed further.

WBN RG 1.97 monitoring instrumentation does not include installed high-range exposure rate monitors as Type E variables. The intended objectives of such instrumentation will be achieved in a different manner than that described in RG 1.97. The following paragraphs describe how WBN's program is designed to monitor radiation exposure rates.

A large number of useful missions outside the MCR during accident conditions may be postulated. These missions would be for activities, such as equipment maintenance, grab sample acquisition, and laboratory analyses of grab samples, that might enhance accident mitigation. Exposure rates encountered on these missions would vary over a wide range. This variability arises from the fact that most high exposure outside the containment during accident conditions would be attributable to contained sources and, therefore, be strong functions of distance from the sources. Because of the wide exposure rate variability, the installation of even a large number of high-range exposure rate monitoring instruments at selected locations on projected mission routes might not contribute substantially, either to the planning of missions for accident mitigation purposes or to the minimization of dose equivalent to personnel performing the missions.

Based on the above considerations, the WBN radiation monitoring system design uses portable high-range exposure rate instruments in lieu of installed high-range exposure rate monitors. Crews attempting missions outside the MCR following an accident would include Radiological Control personnel provided with high-range exposure rate instrumentation. The range of the Type E portable instrumentation available for this purpose is 1.0 E-3 R/hr to 1.0 E4 R/hr, which is consistent with the range required for area exposure rate monitoring.

APPENDIX C

TABLE C

REG GUIDE 1.97 R2 DEVIATION AND
JUSTIFICATION FOR DEVIATIONS

Additionally, the TVA radiation monitoring system presently includes normal-range area monitors, each with a range from 1.0 E-1 MR/hr to 1.0E4 MR/hr. These monitors are located throughout the plant in areas where personnel access is common. Although the area monitors are not required to be within the scope of the environmental qualification program and they are not included in the Postaccident Monitoring (PAM) program, monitors located outside the primary containment and other locations of high postaccident exposure rates can be expected to remain on scale and to continue to provide exposure rate indication with required accuracy during accident conditions. The monitors that remain on scale will provide useful input to MCR personnel for assessment of plant exposure rate levels during accident conditions. Based upon this assessment and WBN Radiological Emergency Plan dose limitations, a decision will be made as to whether or not missions outside the MCR would be attempted.

In summary, the WBN position on high-range accident monitoring is that high-range exposure rate instrumentation will not be installed and that high-range monitoring will be provided by portable monitoring instrumentation that meets the RG 1.97 required range.

DEVIATION 32

VARIABLE (5)

Containment Sump Level (Wide Range)

DEVIATION FROM RG 1.97 GUIDANCE

The range recommended in RG 1.97, Revision 2, is "Bottom of containment to 600,000 gallon level equivalent." Watts Bar recommends a range from 0-200 inches (with the "0" level starting at six inches above the reactor floor) (see Note).

JUSTIFICATION

Watts Bar utilizes a containment sump level monitoring system that starts measuring at six inches above the containment floor (level tap located at elevation 703' 3-3/8"). The range of the instrument is 200 inches (719' 11-3/8"). The total volume of water available to flood containment post-LOCA is 844,000 gallons, which is approximately equivalent to 717' 2-2/5" steady state maximum flood level. Therefore, the recommended range is fully adequate to monitor the maximum equilibrium flood level that would be experienced.

Note: The containment sump level monitoring system is utilized only during an accident. During normal operation reactor coolant leakage is monitored by the reactor building floor and equipment drain pocket sump. For post accident monitoring, the operator is aware that the "0" level actually begins at 6" above the floor and will realize that there is extra water inside containment when the sump monitor begins to indicate.

APPENDIX C

TABLE C
REG GUIDE 1.97 R2 DEVIATION AND
JUSTIFICATION FOR DEVIATIONS

DEVIATION 33

VARIABLE 95

Condenser Vacuum Pump Exhaust Vent (Noble gas)

DEVIATION FROM RG 1.97 GUIDANCE

The RG 1.97, Revision 2, required range for the condenser vacuum pump exhaust monitors is 1.0 E-6 to 1.0 E+5uCi/cc.

JUSTIFICATION

TVA has determined the total gas required range of the condenser vacuum pump exhaust monitors to be less than the 1.0E-6 value in RG for the low end of the range and 2.4E+3uCi/cc at the upper end of the range.

The steam generator tube rupture (SGTR) is the only credible accident monitored by the condenser vacuum pump exhaust monitor. NUREG-0800, Revision 2 requires that the SGTR accident be analyzed using the highest isotope concentrations allowed by the Watts Bar Technical Specifications. The specific activity of the reactor coolant is limited to:

a) Less than or equal to 1 microcurie per gram dose equivalent Iodine-131, and
b) Less than or equal to 100/EuCi/gm

The dose equivalent I-131 is more than 4 times more restrictive that the 100/E limit. The 100/E is more conservative and is selected to demonstrate that the monitor will remain on scale during the most severe accident. **The highest concentration of mixed noble gas isotopes that can be present under the 100/E limit is 1.45E+3 uCi/cc as determined in TVA calculation WBNAPS3-048 [PL-08-0501].** For the SGTR source spectrum, the maximum measurable concentration for the condenser vacuum pump exhaust monitors is 3.53E+4. Therefore, the Watts Bar required range for the condenser vacuum pump exhaust monitors meets the intent of RG 1.97, Revision 2 based on either the mixed gas or the SGTR specific source spectrum.

DEVIATION 34

VARIABLE 97c & 97d
Primary Coolant Dissolved Total Gas (97d) and Dissolved Oxygen (97c)

DEVIATION FROM RG 1.97 GUIDANCE
RG 1.97, R2 indicates the range for variable 97d is from 0 to 2000 cc/Kg and the range from variable 97c is 0 to 20 ppm. The TVA required range for variable 97d is 100 to 2000 cc/Kg, and 1 to 20 ppm for variable 97c.

JUSTIFICATION
The TVA required ranges for variable 97c and 97d permit adequate assessment of the primary system for these dissolved gases, and therefore, meets the intent of RG 1.97.

APPENDIX C

TABLE C

REG GUIDE 1.97 R2 DEVIATION AND
JUSTIFICATION FOR DEVIATIONS

DEVIATION 35

VARIABLE (20)

Control Rod Position

DEVIATION FROM RG 1.97 GUIDANCE

RG 1.97 recommends that control rod position indication be a Type B. Category 3 variable (B3) to monitor for reactivity control. Watts Bar recommends that this variable be a Type D, Category 3 variable (D3).

JUSTIFICATION

Control rod position indication is an indirect variable. It provides backup indication for monitoring reactivity control. Neutron flux (category 1) is a direct variable that allows the operator to determine if reactivity is under control (i.e., the reactor has tripped and the core is in a subcritical condition). Since this provides backup indication, utilizing it as a Type D variable is sufficient.

DEVIATION 36

VARIABLE 4

Containment Area Radiation, High Range

DEVIATION FROM RG 1.97 GUIDANCE

Note 7 of RG 1.97, R2 for the subject variable states, "detectors should respond to gamma photons within any energy range from 60 KeV to 3 MeV with an energy response accuracy of 20 percent at any specific photon energy from 0.1 MeV to 1 MeV. Overall system accuracy should be within a factor of 2 over the entire range. TVA meets the requirements of RG 1.97, R3 Note 7 for the subject variable, which states, "Detectors should respond to gamma radiation photons within any range from 60 KeV to 3 MeV with a dose rate response accuracy within a factor of 2 over the entire range."

JUSTIFICATION

It is acceptable to meet the requirements of RG 1.97, R3.

APPENDIX C

TABLE C
REG GUIDE 1.97 R2 DEVIATION AND
JUSTIFICATION FOR DEVIATIONS

DEVIATION 37

VARIABLE 6

Core Exit Temperature

DEVIATION FROM RG 1.97 R2 GUIDANCE

This Type A, Category 1 variable has been provided with a minimum of two independent channels (PAM 1 and PAM 2) for monitoring core exit temperature. Where failure of a channel would present ambiguous or confusing information to the operator, preventing the operator from taking action or misleading the operator, RG 1.97 recommends that an additional redundant (PAM 3) channel be provided. One channel of the WBN core exit temperature indication is subject to direct failure as a result of a specific pipe break jet impingement and/or pipe whip impact on the cable/conduit routed near the safety injection (SI) accumulator cold leg injection line in Loop 1. The WBN design does not include a third redundant channel for this variable.

JUSTIFICATION

The core exit thermocouples were added to the plant design to provide direct indication of degrading core cooling conditions following transient events similar to that experienced at Three Mile Island (TMI). These events typically develop gradually over time and involve a great deal of operator action and control. The core exit temperature indication was intended to prevent erroneous operator termination of emergency core cooling system (ECCS) flow to the reactor coolant system (RCS) after small breaks or transients that do not rapidly depressurize the RCS.

The challenge to the channel redundancy in this case is due to a specific primary loop pipe break at the cold leg injection check valve. The injection line is 10-inches diameter, schedule 140 pipe and the postulated break is a full guillotine rupture which results in a blowdown flow area from the primary loop side of the break of 60 in^2 or 0.4176 ft^2. This break is included in the loss-of-coolant-accident (LOCA) break size spectrum and is considered an intermediate size break. FSAR Chapter 15 analyses show that breaks in this range rapidly depressurize the primary system, causing automatic ECCS response which refloods the core and terminates the core heatup transient. However, should such a break occur, the affected channel is expected to fail open and not give erroneous indication that could confuse the operators.

It is the WBN position that the RG 1.97 R2 indication provided by reactor vessel level, RCS pressure, RCS temperatures T_{hot} and T_{cold}, and containment pressure and temperature will enable the operators to compensate for a loss of one channel of CET due to this specific pipe break plus a single failure of the redundant channel. The operators will be able to correctly assess the accident scenario and determine the effectiveness of postaccident core cooling system response during performance of the Emergency Operating Procedures.

ENCLOSURE 1

Responses To Licensee Open Items To Be Resolved For SER Approval

ATTACHMENT 6

(This Attachment contained on the OSM)

EDCR 52421 Excerpt

LEGIBILITY EVALUATED AND ACCEPTED FOR ISSUE.

Kathleen Drevik / KATHLEEN DREVIK 1/10 KHD 1/21/10
SIGNATURE REV A ALL PAGES DATE 1/21/2010

EDCR 52421-A
Page 1

EDCR COVER SHEET

GENERAL INFORMATION			Page No. 1
EDCR TYPE (Check One Box Only)	☐ EDCR #		Rev.
	☒ EDCR-2 #	52421	Rev. A

☐ Check here if this is a Streamlined EDCR.
☐ Check here if this EDCR is for Documentation change only & No construction work is required.
☐ SR ☐ QR Check appropriate box if field material procurement quality requirements included.

System	Building	Elevation	Quality Class	Lead Discipline	Code/Class
92,99,235,261 278,293,55	RXB, AUX, CTL, AEB	702, 737, 729, 755, 759, 757	SR	I&C	N/A

WORK SCOPE STATEMENT:

Replace unqualified Westinghouse Source / Intermediate range Neutron Monitoring system with a Reg Guide 1.97 qualified system from Thermo-Fisher Scientific, procured under contract 75148. Detailed Workscope is contained on the following pages.

PREPARED:			VERIFIED:	
Aaron Trelease (865) 632-7519		1/20/10	William H Underwood / WILLIAM H UNDERWOOD	1/20/10
Design Engineer	Phone	Date	Engineer	Date
APPROVALS:			**INTER DISCIPLINE REVIEWS:**	
A.R. LANE		01/21/10	Robert G Brown	1/20/10
Civil EGS		Date	Civil Engineer	Date
Fred Dintzer / FRED DINTZER		1/20/10	Aaron Trelease	1/20/10
I&C EGS		Date	I&C Engineer	Date
Anil Kumar / ANIL C. BANGALORE (for MOHAN BALI)		1/21/10	Jason P. Curns / JASON P. CURNS	1/21/10
Electrical EGS		Date	Electrical Engineer	Date
N/A			N/A	
Mechanical EGS		Date	Mechanical Engineer	Date
N/A			N/A	
Plant Design EGS		Date	Plant Design Engineer	Date
Roger E Smith / Roger E Smith		1/21/10	MICHAEL OVERSTREET	1/21/10
Project Engineering Manager		Date	Project QA Manager	Date
ACCEPTANCE:			**OTHER ORGANIZATIONS:**	
SEE PAGE 1a			N/A	
Responsible Superintendent		Date	Signature/Org'n.:	Date
SEE PAGE 1a			N/A	
Field Engineer		Date	Signature/Org'n.:	Date
ED FREEMAN		1-21-10	N/A	
TVA Engineering Manager		Date	Signature/Org'n.:	Date

WSmith WA 1-20-10

DJZ 1/20/10

Refer to the electronic documents in TVA Business Support Library (BSL) for current revision.

EDCR COVER SHEET

GENERAL INFORMATION			Page No.	1a
EDCR TYPE	☐ EDCR #		Rev.	
(Check One Box Only)	☒ EDCR-2 #	52421	Rev.	A

☐ Check here if this is a Streamlined EDCR.
☐ Check here if this EDCR is for Documentation change only & No construction work is required.
☐ SR ☐ QR Check appropriate box if field material procurement quality requirements included.

System	Building	Elevation	Quality Class	Lead Discipline	Code/Class
92,99,235,261 278,293,55	RXB, AUX, CTL, AEB	702, 737, 729, 755, 759, 757	SR	I&C	N/A

WORK SCOPE STATEMENT:

Replace unqualified Westinghouse Source / Intermediate range Neutron Monitoring system with a Reg Guide 1.97 qualified system from Thermo-Fisher Scientific, procured under contract 75148. Detailed Workscope is contained on the following pages.

PREPARED:			VERIFIED:	
SEE PAGE 1 Aaron Trelease (865) 632-7519			SEE PAGE 1	
Design Engineer	Phone	Date	Engineer	Date
APPROVALS:			**INTER DISCIPLINE REVIEWS:**	
SEE PAGE 1			SEE PAGE 1	
Civil EGS		Date	Civil Engineer	Date
SEE PAGE 1			SEE PAGE 1	
I&C EGS		Date	I&C Engineer	Date
SEE PAGE 1			SEE PAGE 1	
Electrical EGS		Date	Electrical Engineer	Date
N/A			N/A	
Mechanical EGS		Date	Mechanical Engineer	Date
N/A			N/A	
Plant Design EGS		Date	Plant Design Engineer	Date
SEE PAGE 1			SEE PAGE 1	
Project Engineering Manager		Date	Project QA Manager	Date
ACCEPTANCE:			**OTHER ORGANIZATIONS:**	
Jm Erickson		1/20/10	N/A	
Responsible Superintendent		Date	Signature/Org'n.:	Date
Ali Hemmati		1/20/10	N/A	
Field Engineer	Ali Hemmati	Date	Signature/Org'n.:	Date
SEE PAGE 1			N/A	
TVA Engineering Manager		Date	Signature/Org'n.:	Date

Refer to the electronic documents in TVA Business Support Library (BSL) for current revision.

EDCR COVER SHEET (CONTINUED)

EDCR# 52421 **Rev.** A **Page No.** 2

WORK SCOPE STATEMENT (CONTINUED):

The currently installed Unit 2 Neutron Monitoring system is not qualified for post accident monitoring required by Reg. Guide 1.97. This EDCR replaces the unqualified Westinghouse system with Class 1E qualified Neutron Monitoring system and cable.

The following actions are required to upgrade the Neutron Monitoring System for Regulatory Guide 1.97 compliance

(1) Remove the following existing unqualified Westinghouse source and intermediate range equipment supplied on TVA contract 54114 from the field if installed, and from MEL:

Remote:

2-NMD-92-NE31-D	Westinghouse Channel 1 Detector Source Range
2-NMD-92-NE32-E	Westinghouse Channel 2 Detector Source Range
2-NMD-92-NE35-D	Westinghouse Channel 1 Detector Intermediate Range
2-NMD-92-NE36-E	Westinghouse Channel 2 Detector Intermediate Range

(2) Install qualified Thermo-Fisher Scientific equipment procured under contract 75148. (Reference MR# 25402-011-MRA-JA37-00001). Construction is to notify RADCON prior to installing or moving the detectors.

Remote

2-NMD-92-131-D	Channel 1 Detector (Source and Intermediate range)
2-NMD-92-132-E	Channel 2 Detector (Source and Intermediate range)
2-NM-92-131-D	Channel 1 Wide range Amplifier
2-NM-92-132-E	Channel 2 Wide range Amplifier
2-NM-92-138-D	Optical Isolator
2-TB-92-1-E	Channel 2 Junction Box
2-TB-92-2-D	Channel 1 Junction Box

2-L-10

2-NI-92-138	Appendix R Wide Range Signal Processor

2-M-13

2-NI-92-131-D	Channel 1 Source Range Signal Processor
2-NI-92-132-E	Channel 2 Source Range Signal Processor
2-NI-92-133-D	Channel 1 Shutdown Monitor
2-NI-92-134-E	Channel 2 Shutdown Monitor
2-NI-92-135-D	Channel 1 Intermediate Range Signal Processor
2-NI-92-136-E	Channel 2 Intermediate Range Signal Processor

Note: contact the Special Nuclear Material Custodian (SNMC) prior to movement of 2-NMD-92-131-D and 2-NMD-92-132-E

(3) Delete the existing cables and internal wiring associated with the Westinghouse source and intermediate range equipment

(4) Add the new cables and internal wiring required to implement the replacement of the existing Westinghouse source and intermediate range equipment with the new Thermo-Fisher Scientific equipment.

(5) Control Diagram 2-47W610-92-1 has been created to reflect the configuration of the Neutron Monitoring System

(6) Schematic Diagrams 2-45W600-92-1 and 2-45W600-92-2 have been created to reflect the configuration of the source and intermediate ranges of the Neutron Monitoring System.

(7) New UNIDs have been assigned for the new Thermo-Fisher Scientific source and intermediate range neutron monitoring equipment.

(8) The remaining UNIDs for the current Westinghouse system have been deleted.

Construction shall provide U2 operation labeling group all required data (MEL, drawings, DRAs) requiring ID tags / labels needed for completion of this EDCR.

The cables that will be installed as a part of this EDCR will be pulled via bulk cable pull packages. The following list of cables identifies the new cables added to support this EDCR. Each cable number is listed by its Cable ID number, and the bulk cable pull package that will physically pull the cable.

Cable	Pull Package
2NM2330E	EDCR54637
2NM2331E	EDCR54639
2NM2332E	EDCR54639
2NM2333D	EDCR54637
2NM2334D	EDCR54639
2NM2335D	EDCR54639
2NM2336E	EDCR54637
2NM2337E	EDCR54637
2NM2339D	EDCR54637
2NM2340D	EDCR54637
2NM2341D	EDCR54637
2NM2342D	EDCR54637
2NM2343D	EDCR54637

Cable	Pull Package
2NM2344D	EDCR54637
2NM2345	EDCR54637
2NM2346	EDCR54637
2NM2347	EDCR54637
2NM2348	EDCR54632
2NM2349	EDCR54632
2NM2350	EDCR54632
2NM2351	EDCR54632
2PV326D	EDCR54636
2PV327	EDCR54636
2PV328D	EDCR54636
2PV329E	EDCR54636
2NM2338E	EDCR54637

Special Precautions to the Unit 1 Interface:
EDCR-2 52421 is based on the 0-TI-2 (revision 0) and 25402-3DP-G04G-00081 (revision 5) procedures. The package installs equipment in an area that contains Unit 1 operating equipment. The installation of this equipment should have no adverse affect on Unit 1 operating equipment or common systems and components. This EDCR installs a wide range amplifier in Panel 2-L-10 In the auxiliary control room. The following items are Unit 1 associated devices. **These items are energized and are required for Unit 1 operation. Do not touch them, and use caution when working in their vicinity.**

2-FI-67-61C
2-FI-67-62C
2-LI-70-63C
2-LI-70-99C
2-FI-70-164C
2-FI-70-159C
2-HS-70-63C
2-HS-70-66C
2-PI-70-17C

In addition, connections will be made to 120V AC Vital Instrument Power Boards 2-I and 2-II. DCN 52602 moves interface points from the terminal blocks to the breakers in the 120 VAC Power Boards 2-I and 2-II, as well as changing terminal blocks L3A & L3B designations from non-safety related to safety related. DCN 52602 is a prerequisite to EDCR 52421. The following breakers will be utilized on Vital Power board 2-I: 18, 30, 45 and 46. On Vital power board 2-II, Breakers 45, and 46 will be used. **The Vital power Boards are considered Unit 0 boundaries, and extreme caution must be taken to avoid interfering with the operating plant equipment. The connections to these boards will require outage conditions.**

New Thermo Fisher Equipment

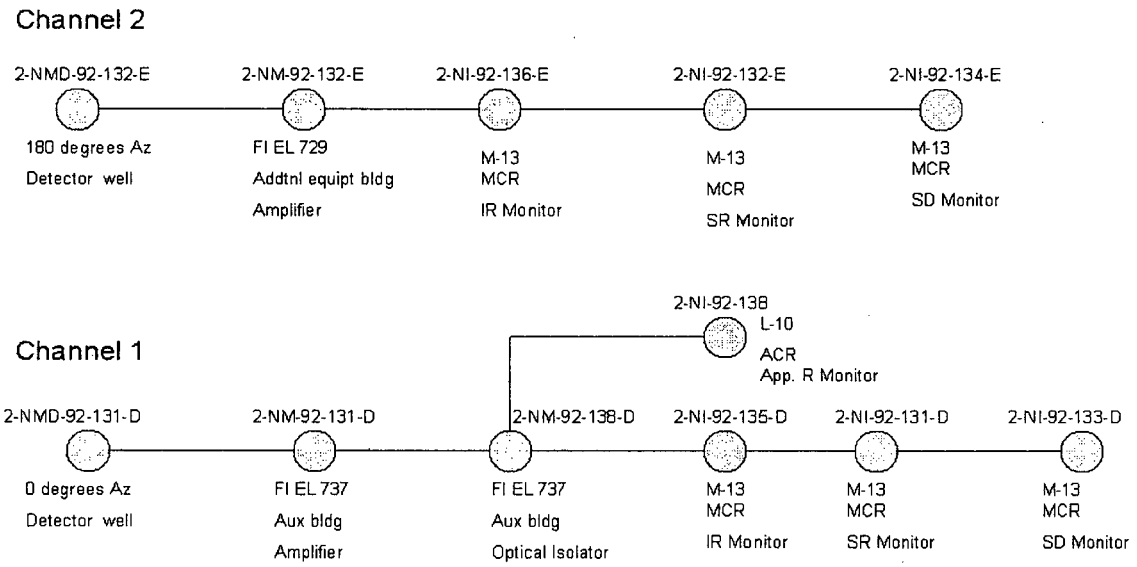

This EDCR will install the Unit 2 Source and Intermediate Range Neutron Monitoring System for Unit 2, replacing the obsolete Westinghouse system with an upgraded system that is reg guide 1.97 compliant. Unit 1 work was performed under DCN 03206.

Due to the nature of the differences in core orientation between Unit 1 and Unit 2, the NIS channels will follow the placement of the core geometry (see figure below), rendering the placement of the detectors opposite to Unit 1 in terms of the containment. This change will propagate through the setup and routing of the installed system, and will create a unit difference (see the unit difference form.)

Unit 2 Channel 1 Wide Range Amplifier [2-NM-92-131-D] shall be mounted in a similar manner to the Unit 1 Channel 2 Wide Range Amplifier, at elevation 737' in the Aux Building on the Unit 2 side of spent fuel pit heat exchanger room. Mounting the wide range amplifier in this location will require the relocation of a fire extinguisher. Mounting details shall be in accordance with the vendor documents, civil DRAs and seismic calculations. The mounting of the amplifier and optical isolator are seismically qualified under WCG-ACQ-0511.

Unit 2 Channel 2 Wide Range Amplifier [2-NM-92-132-E] shall be installed in a manner similar to the Unit 1 Channel 1 Wide Range Amplifier in the additional equipment building room A15 approximately 15 feet off the floor. Note that as of January 20th 2010, the wall that contains door A214 (an access to additional equipment

building room A15) is part of the ABSCE boundary. The mounting elevation for the Wide Range Amplifier is due to the requirement that source range instrumentation equipment be above the design basis flood plain, and shall be accessible during the flood. In order to comply with Design Criteria WB-DC-40-29, when the reactor vessel head is on, the source range neutron flux level shall be available to verify that decay heat in the reactor core is being safely removed by natural circulation in the reactor coolant loops. The criteria states that the maximum flood level is 736.9 feet, and mounting the device lower would subject it to be lower than design basis flood levels. The amplifier is housed in a spray-tight NEMA-12 enclosure, which is not qualified to operate submerged. The equipment will therefore be mounted in a manner similar to Unit 1, above the design basis flood plain.

Optical Isolator [2-NM-92-138-D] shall be mounted along with the Unit 2 Channel 1 Wide Range Amplifier at elevation 737' in the Aux Building on the Unit 2 side of the spent fuel pit heat exchanger room. The Optical Isolator's function is to isolate the signal from the Wide Range Amplifier, and send the signal to the Wide Range Signal Processor in the Auxiliary Control Room to provide neutron indication in the case of an Appendix R event that causes evacuation of the MCR. The decision was made to keep the Optical Isolator associated with Channel 1 so that the Wide Range Signal Processor in the L-10 panel is associated with the same core location as in Unit 1.

In Unit 1, the Optical Isolator's classification is safety related and 1E but not EQ. The Optical Isolator is qualified by the vendor to the same conditions as the Wide Range Amplifier, and is contained in a similar NEMA-12 enclosure as the amplifier. The Unit 2 Optical Isolator will be in a harsh environment. Calculation WBNOSG4027 will be updated to reflect the addition of the Optical Isolator to a harsh environment, and is listed as an open item in the package.

Wide Range Signal Processor [2-NI-92-138] shall be mounted in panel 2-L-10 in the Auxiliary Control Room. The purpose of this device is to satisfy 10CFR50 Appendix R or Branch Technical Position CMEB 9.5-1 (fire in the control room) remote shutdown monitoring requirements. The cutout shall be revised under EDCR 53338, while EDCR-2 52421 shall address the mounting. The Wide Range Signal Processor shall be mounted in place of the Westinghouse backup source range drawer and utilize the existing Westinghouse slides. The mounting of the signal processor to panel 2-L-10 and the structural integrity of the panel areseismically qualified under calculation: WCG-ACQ-0427.

The Signal Processor is mounted in a different location in the panel as Unit 1. The reason for this is that in Unit 1, Gamma Metrics / Thermo- fisher Scientific equipment had not been used to start up the plant, so the existing backup Westinghouse Source Range Drawer was kept in the plant to monitor the plant in case of a failure of the Gamma Metrics equipment. The Unit 1 Gamma-Metrics equipment has demonstrated its reliability, and the system has been used in Unit 1 startup operations successfully in the past, so the Westinghouse Backup Source Range Drawer is no longer needed. This device has been removed from the plant, and will be replaced physically and functionally by the Wide Range Signal Processor.

Source / Intermediate Range Signal Processors, Channels 1&2 shall be mounted in panel 2-M-13. The existing unqualified Westinghouse drawers were physically removed from panel 2-M-13. The drawers will utilize the existing Westinghouse slides for mounting purposes. Unit 1 added seismic screws to the signal processors for additional security. This change will be implemented in this EDCR. Mounting hardware will be supplied by Westinghouse under WBS: 3.2. Currently, there are no shutdown monitors installed in 2-M-13, and this is new equipment that will be installed per this package. The shutdown monitors are provided on a standard 19-inch mounted plate to mount the monitors. The mounting of the source/ intermediate range drawers and shutdown monitors to panel 2-M-13 and the panel structural integrity are seismically qualified by Westinghouse report WBT-D-0524. The anchorage of the panel is seismically qualified under calculation WCG-ACQ-0516.

Addressed UNIDs:

2-NI-92-135-D	Channel 1 intermediate range monitor drawer (2-M-13)
2-NI-92-136-E	Channel 2 intermediate range monitor drawer (2-M-13)
2-NI-92-131-D	Channel 1 source range monitor drawer (2-M-13)

2-NI-92-132-E	Channel 2 source range monitor drawer (2-M-13)
2-NI-92-133-D	Channel 1 shutdown monitor (2-M-13)
2-NI-92-134-E	Channel 2 shutdown monitor (2-M-13)

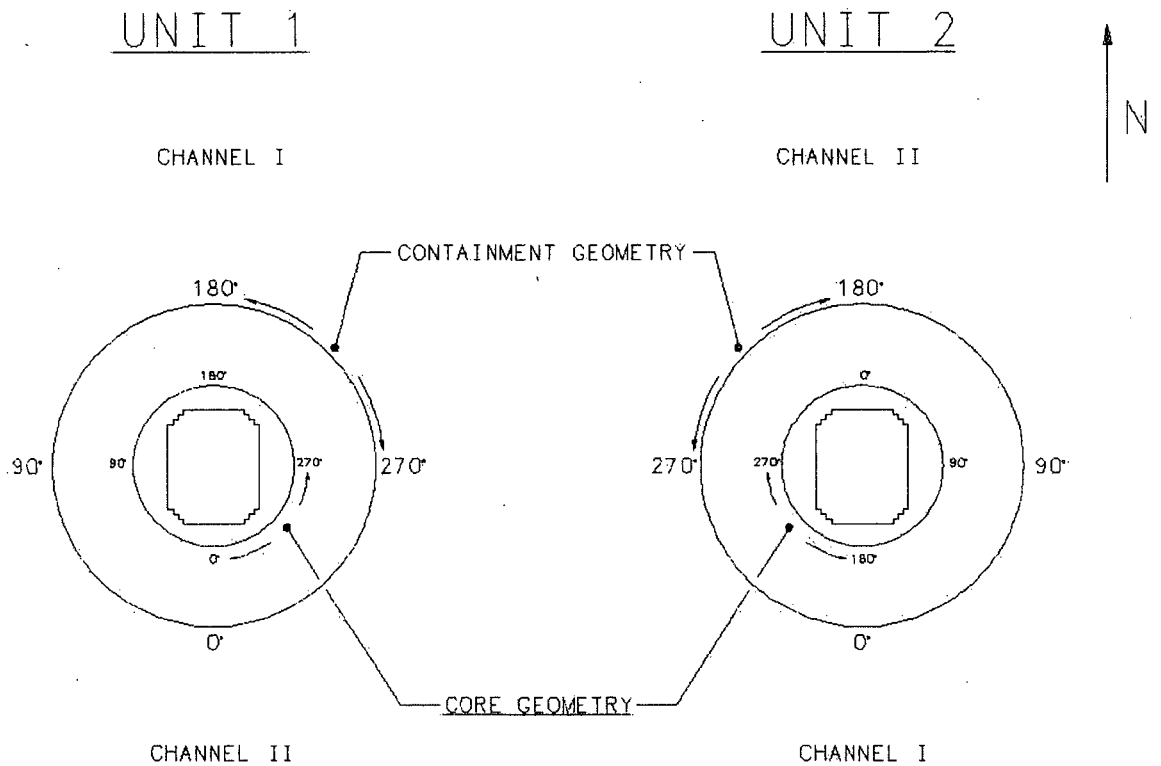

Documentation Review:

Calculations WBN-OSG4-051(single failure analysis for RG 1.97 category 1 variables), WBN-OSG4-076 (Determination of category 1 RG 1.97 variables requiring trend indication), WBN-OSG4-082 (Basis for RG 1.97 R2 type B and C Variables Determination), and WBN-OSG4-112 (RG 1.97-type D Variable selection) were reviewed for Unit 2 applicability, and no action was found necessary. Calculation WBN-OSG4-111 (Regulatory Guide 1.97 category 1 and type A, B, C, D variable required range and accuracy determination) was reviewed for changes needed, and will require revision for Unit 2 applicability.

Appendix R:

System 092 is a required Appendix R system. Replacement of the obsolete equipment with upgraded components is being implemented to ensure that redundant components are in accordance with Appendix R separation requirements and will be included in the new fire protection report. A single wide range signal processor is being added in the auxiliary control room to satisfy 10CFR Appendix R (fire in the control room). Cables and conduit will not be pulled via this EDCR, and therefore, fire and hazard barriers will not be impacted.

The addition of combustible loading in each fire zone is 4 lbs or less and thus does not create an Appendix R concern.

Post Accident Monitoring:

The currently installed Unit 2 Neutron Monitoring System is not qualified for Post Accident Monitoring (PAM) required by Reg. Guide 1.97. This EDCR replaces the unqualified Westinghouse system with Class 1E qualified Neutron Monitoring system and cable.

The new Thermo- Fisher Scientific equipment is PAM category 1. The system is evaluated under calculations WBNEEBIDQ29990901 and WBNEEBIDQ29990903.

General Construction Notes and Design Implementation

The vendor assembly drawing for the system, 900231, shows the system interconnection and the mounting details for the detector assemblies. Each of the assemblies is first mounted in its permanent location and then the assemblies are interconnected. Construction should mount the assemblies and route the cables with the aid of the Vendor Manual and use Thermo-Fisher Scientific Field service for interconnection, powering and checkout of assemblies in each channel.

The detector assemblies are delivered ready to install and with the ends of the cables prepared for the connectors and covered with packing. The connectors are provided in separate plastic bags. Care should be taken to protect the cable ends from being bent or damaged.

Notes:

1. The cable must not be damaged and the detector assemblies must be handled carefully to prevent accidental damage, especially to the area where the cable exits the detector.

2. System isolation from plant ground must be maintained. Great care should be exercised when handling the detectors to avoid kinking the associated detector cables. Each detector assembly with integral cable and the junction boxes must be installed isolated from plant ground. They should all be verified as isolated from plant ground with insulation resistances of greater than 10^5 Ohms at 50 volts. For mounting details and part numbers, refer to the vendor assembly drawing list and outline drawings in the vendor manual.

3. Due to the very low level input signal, the Wide Range Amplifiers are highly sensitive. To avoid excessive source range noise, it is important to use care in routing the amplifier cable assemblies. The following precautions must be observed:

    a. The cable assemblies must be physically separated from all power-handling cables by a minimum of 5 feet at all points where they are not enclosed by conduit.

    b. The cable may be routed in instrumentation-only cable trays provided that no annunciator or relay signals are carried by other wiring in the trays. Such signals are proven noise generators.

    c. The cable must remain physically separated, by a minimum of 5 feet, at all points from cables supplying control rod or control rod drive mechanisms.

    d. The signal wires should be kept separate from power cables inside the electronic enclosures and should be run in separate conduits between enclosures.

    e. When attaching conduits to the electronic enclosures, enter the enclosure as close as possible to the destination terminal block to eliminate excess wire lengths inside the enclosures.

    f. The enclosures should be tied securely to the plant ground with a ground strap.

    g. The ground termination on the power terminal block should be tied securely to the plant ground.

Installation can be broken down to those actions normally preformed by Construction, and the actions normally preformed by Thermo-Fisher Scientific Field service.

OPERATIONS TO BE PERFORMED BY CONSTRUCTION:

- Installation of detector assemblies and junction boxes, routing of the detector cables, and ensuring that these components are isolated from ground.
- Installation (mounting) of the electronic boxes: Wide Range Amplifiers and Optical Isolator
- Installation (mounting) of the source range signal processors, the Intermediate Range Signal Processors, and the Wide Range Signal Processors, and the shutdown monitors
- Installation of AC power to equipment **(do not power up until inspected by Thermo-Fisher Scientific field service.)**
- Interconnection between the Wide Range Amplifiers, Optical Isolator, Signal Processors, and customer-connection to the equipment outputs.

OPERATIONS TO BE PERFORMED BY THERMO-FISHER SCIENTIFIC:

- Routing of cable ends into the junction boxes for the detector cables and in-containment cable assemblies and installation of the cable-end connectors to the junction boxes.
- Connection of triaxial connectors to the penetrations (in-containment and amplifier cable assemblies).
- Installation of the amplifier cable-assembly connectors for connection to the preamplifiers.
- Cable checkout using a megohmeter or time delay reflectometer (if required) and verification of cable isolation from ground.
- Application of power and inspection of equipment.

BACKGROUND:

Unit 1 upgraded the corresponding Neutron Monitoring System from Westinghouse to Gamma- Metrics equipment under DCN 03206. This change was implemented because the existing Westinghouse equipment was not qualified for post accident monitoring as identified in 10CFR50 Appendix A criteria 13 and 19, and identified in REG Guide 1.97. DCN 03206 completed all support work, including installing the system, revising panel cutouts, revising annunciator windows, routing cables, moving conflicting equipment, installing cables, etc. EDCR 52421 will focus on the physical installation, interconnection and mounting of equipment. The remaining work is covered by other EDCRs as follows. Cable routing will be covered by EDCRs 54637-A, 54639-A, 54632-A, and 54636-A. Panel 2-L-10 will be revised by EDCR 53338. Annunciator windows are revised under EDCR 52315.

Several DCNs subsequent to DCN03206 have modified the unit 1 system. EDCR 52421 evaluates and incorporates relevant information from these DCNs as follows.

DCN 51239-A re-ranged the Unit 1 source range instrumentation due to the increase in boron concentration in the reactor coolant system during startup and refueling conditions. The increase in boron concentration is required to support the tritium production program. It was determined that Unit 2 should also incorporate this change in order to maintain unit consistency, and to address core improvements (low core leakage).

DCN 36179-A provided local neutron flux indication by implementing the capability to temporarily move the Wide Range Signal Processor from panel 2-L-10 to connect it to the amplifiers. This change was required for

Unit 1 because of the concern that the power supply to 1-NI-92-138 and the D-channel Optical Isolator, as well as the signal circuits to the E-channel Short Range/Intermediate Range Amplifier, could be lost simultaneously during an Appendix R event. Previously mentioned cable-routing EDCRs are routing cables such that there is no Appendix R concern, therefore this DCN will not require incorporation into Unit 2.

EDCR UNIT DIFFERENCE FORM

EDCR# 52421 **Rev.** A **Page No.** 24

Operations Difference is identified as follows:

WBN Unit 1 currently has the Gamma-Metrics source intermediate range system model RCS-300. This model is obsolete, so Watts Bar Unit 2 will receive the new 300i NFMS (neutron flux monitoring system). The 300i system has several upgrades to the RCS-300.

Source Range / Intermediate Range Signal Processor Improvements:

- The source and intermediate signal processors come with upgraded bar graph liquid crystal displays, as the Unit 1 analog meters are obsolete.
- In Unit 1, the source and intermediate range signal processors have "Counts per second " or "Percent power level" displays, respectively. Unit 2 source and intermediate range signal processors come with "Decades per minute" on the drawer fronts in addition to the other displays.
- The selector knobs for Unit 2 on the intermediate range signal processor are set up differently than on Unit 1. There are a total of 3 dials on Unit 1, including level trip, adjust, and operation selector. On Unit 2, there are a total of 5 knobs, including test selector and output selector in addition to those previously mentioned.
- The shutdown monitor on the Unit 2 side will not contain an alarm reset button, which was used to manually disable the alarm during the drawer latching process. The alarm reset function is now obsolete, as this feature can be handled at the annunciator.
- Training differences will be required due to this upgrade. Detailed information on the new equipment can be found in the Thermo-Fisher Scientific vendor manual for the source/intermediate range neutron monitoring system.

The wide range signal processor in panel 2-L-10 will be in a different location than in Unit 1. The backup source range drawer is being removed from 2-L-10 due to obsolescence, and the wide range signal processor will be mounted in its place.

In Unit 1 due to improper cable routing, there was a potential for both channels to be functionally disabled due to a possible appendix R event. To address this, unit 1 provided the ability to remove the wide range signal processor from the auxiliary control room, and take the device down to get signal directly from the channel 1 optical isolator, and get power from channel 2 amplifier. Unit 2 will rout cables for the device in such a way that appendix R will not be a concern. Operations should be aware that it is no longer required to move the wide range signal processor for Unit 2. Quick disconnects in the optical isolator, channel 1 amplifier and wide range signal processors are not required in unit 2, and will not be installed in this EDCR.

Unit 2 TVA Operations Acceptance (Mgr/or Designee): Stuckler for Tom Wallace **Date:** 1/8/10

Maintenance Difference is identified as follows:

The Upgrade to the Unit 2 neutron monitoring system creates several unit differences that maintenance must be made aware of, including modified locations for the channel 1 / channel 2 equipment, and upgrades in testing methodology and equipment.

- Front panel output selector switches allow source and intermediate level signals and all bistable set points to be read from the front panel test jacks with a 0-10 VDC test meter without having to rack out the drawers..
- Unit 2 equipment will employ new 6-point testing methodology, which is an improvement to the existing 4-point testing methodology of Unit 1. The maintenance and calibration procedures will need to be modified utilizing the vendor manual to reflect this upgrade.
- The new design for the source and intermediate range neutron monitoring system allows for the technician to conduct normal surveillance activities on the drawer without having to rack out the drawer. This functionality is reflected in the setup of the controls. While the Unit 1 system featured fuses on the front panel for control and instrument power, the Unit 2 300i system will feature circuit breakers on the back for control and instrument power. For more information concerning the maintenance and functional testing of the equipment, consult the vendor manual.
- The indicator lights between Units 1 and 2 signal processors are the same, with the exception of the intermediate range non-operate indicator. On unit 1, there was a single non-operate light, whereas unit 2 will feature with indication for amplifier non-operate, and for SR/IR non operate. This additional indication will simplify troubleshooting for the technician.
- Watts bar Unit 1 has wired card edge connectors on the Signal Processors, Whereas the Unit 2 system signal Processors will have printed circuit card backplanes. For more information concerning calibration, testing and maintenance, consult the vendor manual.

Brian G Brady 1/8/10

Unit 2 TVA Maintenance Acceptance (Mgr or Designee): **Date:**

Engineering Difference is identified as follows:

The channel 1 wide range amplifier and optical Isolator will be mounted in the auxiliary building, floor elevation 737'. In Unit 1, the devices were mounted in the additional equipment building, room A14. This difference in relative location is due to the reversed core orientation of Unit 2. See the EDCR work scope statement for more information.

The channel 2 wide range amplifier is mounted in the Unit 2 Additional Equipment building, Room A15. The Unit 1 channel 2 wide range amplifier was mounted in the Auxiliary building, floor elevation 737'. This difference is due to the reversed core orientation of Unit 2. See work scope statement for more information.

As mentioned, WBN Unit 1 currently has the Gamma-Metrics source intermediate range system model RCS-300. This model is obsolete, and the new 300i NFMS (Neutron Flux monitoring System) will be installed in Unit 2. The system will retain all of the functionality of the Unit 1 system.

The following differences are listed as improvements over the Unit 1 system:

- Better Cables: The Unit 2 vendor cable assemblies (201712 and 201722) feature hermetic seals for fixed center pin alignment relative to the coaxial shield "castle" for better Amphenol Triaxial penetration connections.
- Better junction boxes: the Unit 2 junction boxes in the new system add a cover test fitting that is more convenient for complete evacuation and backfill, improving its initial installation.
- Better Amplifier High Voltage Power Supply (HVPS): Unit 1 has 2nd generation power designs (000288-001) that failed high to 2000 Vdc: Unit 2 will be provided with the latest 201401 rev H models.
- Watts bar Unit 1 has wired card edge connectors on the signal processors, whereas the Unit 2 system signal processors will have printed circuit card backplanes.
- Circuit breakers: the signal processors on Watts Bar Unit 1 have AC power fuses on the front panel, whereas the Unit 2 system has rear panel AC circuit breakers.
- Cable interconnection between wide range amplifier and source / intermediate range signal processors will be slightly different. Whereas Unit 1 interconnected cables between both amplifier and source and intermediate range drawers, Unit 2 cables will go from the amplifier directly to the intermediate range signal processor. From there the cables interconnect to the source range signal processor. This represents no difference in operations or maintenance, and represents an improvement on the Unit 1 system.
- WBN Unit 1 signal processors had Gamma –Pak isolator 200526-101 along with resistive buffered outputs, while Unit 2 will have the improved 101033 series quad isolators with separately isolated outputs.
- WBN Unit 1 signal processors originally had 100022 series log amplifiers, later upgraded to 100623-101 series. Unit 2 will have improved 100950 series log amplifiers.
- The Unit 2 front panel trip and permissive indicators on the SR / IR drawers will have low voltage DC LED indicators. This is a significant improvement over the Unit 1 120VAC incandescent indicators, as the LEDs last longer, have lower power requirements, and have a different failure mechanism in that they fade away instead of burning out. This is an improvement because the operator can now tell when a light is going bad, instead of having to react when the light goes out.
- Signal processors will feature improved testing methodology, allowing normal surveillance activities to be completed with a 0-10VDC test meter from the front of the processor without the need to rack out the drawer.
- Due to the pressure test fitting on the front of the vendor supplied junction box, the unit 2 junction box that will house the vendor supplied junction box will need to be deeper. An equivalent junction box will be obtained for unit 2 with a deeper dimension to house the pressure test fitting.

Due to cable routing, Unit 1 had to create the ability to move the wide range signal processor to the field for emergency neutron monitoring due to an appendix R issue (see Operations differences). Unit 2 cables will be routed properly, and that functionality will not be required. Therefore, equipment corresponding to this design change (including quick disconnects on the wide range signal processor and optical isolator) are not needed for Unit 2.

EE Freeman 1-7-10

Unit 2 TVA Engineering Acceptance (Mgr or Designee): **Date:**

Aaron Trelease 1/7/2010

Prepared By: **Date:**

SESG TO ROUTE A COPY OF THIS COMPLETED FORM TO TVA TRAINING MANAGER AND TO UNIT 2 LICENSING.

Streamlined EDCR approved by TVA Oversight N/A

Refer to the electronic documents in TVA Business Support Library (BSL) for current revision.

ENCLOSURE 1

Responses To Licensee Open Items To Be Resolved For SER Approval

ATTACHMENT 7

(This Attachment contained on the OSM)

EDCR 52987 Excerpt

LEGIBILITY EVALUATED AND

ACCEPTED FOR ISSUE.

10/19/09

SIGNATURE ALL PAGES REV A DATE

EDCR COVER SHEET

GENERAL INFORMATION			Page No. 1
EDCR TYPE (Check One Box Only)	☒ EDCR #	52987	Rev. A
	☐ EDCR-2 #		Rev.

☐ Check here if this EDCR is for Documentation change only & No construction work is required.

☒ SR ☐ QR Check appropriate box if field material procurement quality requirements included.

068	RB	Various	SR	I&C	ASME Class 1; 1E; Seismic Cat 1
System	Building	Elevation	Quality Class	Lead Discipline	Code/Class

WORK SCOPE STATEMENT:

Installs new thermowells and RTD's for the RCS hot and cold legs on unit two. Originally unit 1 and 2 were equipped with a bypass line around the steam generators and RCPs to measure temperature. This was modified in unit 1 into the current configuration. Westinghouse is procuring thermowells and RTDs and performing thermowell welds under WBS 2.6.1.9

PREPARED: Mat Merten	VERIFIED: Charles Fisher
632-6626 10/9/09 (Design Engineer, Phone, Date)	Charles Fisher 10-12-09 (Engineer, Date)
APPROVALS:	**INTER DISCIPLINE REVIEWS:**
A.P. Date 10-12-2009 (Civil EGS)	10/08/2009 (Civil Engineer (D. Bose), Date)
10/12/09 (I&C EGS, Date)	10/12/09 (I&C Engineer, Date)
10/9/09 (Electrical EGS, Date)	10/9/09 (Electrical Engineer, Date)
10/12/09 (Mechanical EGS, Date)	10/08/09 (Mechanical Engineer, Date)
N.N. RAJTAN 10/12/09 (Plant Design Engineer, Date)	10/9/2009 (Plant Design Engineer, Date)
10/16/09 (Project Engineering Manager, Date)	10/14/09 (Project QA Manager, Date)
ACCEPTANCE:	**OTHER ORGANIZATIONS:**
"See Page 1A" (Responsible Superintendent, Date)	N/A (Signature/Org'n.:, Date)
"See Page 1A" (Field Engineer, Date)	N/A (Signature/Org'n.:, Date)
William D. Crouch 10/16/09 (TVA Engineering Manager, Date)	N/A (Signature/Org'n.:, Date)

Dan F. Faulkner for William D. Crouch 10/16/09

DAN F. FAULKNER

Refer to the electronic documents in TVA Business Support Library (BSL) for current revision.

Admin-01 10/30/09 | ADMIN 01

Admin 02 12/10/09 | ADMIN 02

Admin 03 2/3/10 | ADMIN 03

EDCR COVER SHEET

GENERAL INFORMATION			Page No. 1 A
EDCR TYPE	☒ EDCR #	52987	Rev. A
(Check One Box Only)	☐ EDCR-2 #		Rev.

☐ Check here if this EDCR is for Documentation change only & No construction work is required.

☒ SR ☐ QR Check appropriate box if field material procurement quality requirements included.

068	RB	Various	SR	I&C	ASME Class 1; 1E; Seismic Cat 1
System	Building	Elevation	Quality Class	Lead Discipline	Code/Class

WORK SCOPE STATEMENT:

Installs new thermowells and RTD's for the RCS hot and cold legs on unit two. Originally unit 1 and 2 were equipped with a bypass line around the steam generators and RCPs to measure temperature. This was modified in unit 1 into the current configuration. Westinghouse is procuring thermowells and RTDs and performing thermowell welds under WBS 2.6.1.9

PREPARED: Mat Merten	VERIFIED: Charles Fisher
632-6626 10/8/09	
Design Engineer Phone Date	Engineer Date
APPROVALS:	**INTER DISCIPLINE REVIEWS:**
	10/08/2009
Civil EGS Date	Civil Engineer Date
I&C EGS Date	I&C Engineer Date
Electrical EGS Date	Electrical Engineer Date
Mechanical EGS Date	Mechanical Engineer Date
Plant Design EGS Date	Plant Design Engineer Date
Project Engineering Manager Date	Project QA Manager Date
ACCEPTANCE:	**OTHER ORGANIZATIONS:**
James C. Calbaugh 10/9/09	
Responsible Superintendent Date	Signature/Org'n.: Date
John M. Williams 10/9/09	
Field Engineer Date	Signature/Org'n.: Date
TVA Engineering Manager Date	Signature/Org'n.: Date

Refer to the electronic documents in TVA Business Support Library (BSL) for current revision.

EDCR COVER SHEET

GENERAL INFORMATION			Page No. 1B
EDCR TYPE	☒ EDCR #	52987	Rev. A
(Check One Box Only)	☐ EDCR-2 #		Rev.

☐ Check here if this EDCR is for Documentation change only & No construction work is required.

☒ SR ☐ QR Check appropriate box if field material procurement quality requirements included.

068	RB	Various	SR	I&C	ASME Class 1; 1E; Seismic Cat 1
System	Building	Elevation	Quality Class	Lead Discipline	Code/Class

WORK SCOPE STATEMENT:

Installs new thermowells and RTD's for the RCS hot and cold legs on unit two. Originally unit 1 and 2 were equipped with a bypass line around the steam generators and RCPs to measure temperature. This was modified in unit 1 into the current configuration. Westinghouse is procuring thermowells and RTDs and performing thermowell welds under WBS 2.6.1.9

PREPARED: Mat Merten

632-6626 10/8/09
Design Engineer — Phone — Date

VERIFIED: Charles Fisher

Charles Fisher 10-12-09
Engineer — Date

APPROVALS:

A.P. LOVE 10.12.2009
Civil EGS — Date

Fred Smith 10/16/09
V LOTSPEICH 10/12/09
I&C EGS — Date

Anil Kumar for (ANIL C. BANGALORE) 10/16/09
MOHAN BALE 10/9/09
Electrical EGS — Date

CK Day for Rashellia Goines 10/12/09
Mechanical EGS — Date

N.N. RAJTAN
N.N. Rajtan 10/12/09
Plant Design EGS — Date

R E Smith 10/16/09
Roger E. Smith 10/14/09
Project Engineering Manager — Date

INTER DISCIPLINE REVIEWS:

10/08/2009
Civil Engineer (D. BOSE) — Date

LOUVAIN L. EDMONDSON JR 10/12/09
I&C Engineer — Date

Jason D. Curns 10/9/09
Electrical Engineer — Date

Chris Hearn 10/08/09
Mechanical Engineer — Date

H.A. PATEL 10/9/2009
Plant Design Engineer — Date

Van McAdams
V. McAdams 10/14/09
Project QA Manager — Date 10/14/09

ACCEPTANCE:

"See Page 1A"
Responsible Superintendent — Date

"See Page 1A"
Field Engineer — Date

CEL 10/14/09
TVA Engineering Manager — Date

OTHER ORGANIZATIONS:

Signature/Org'n.: — Date

Signature/Org'n.: — Date

Signature/Org'n.: — Date

Refer to the electronic documents in TVA Business Support Library (BSL) for current revision.

Statement of Work
EDCR 52987 – RTD Bypass Engineering – WBS 2.6.1.9

The Design Review Board and Final Design Review meetings have been waived by TVA.

The EDCR procedure 25402-3DP-G04G-00081 rev 4 was reviewed and the sole correction made was to the Unit Difference Form. No other technical changes need to be made to this in-process EDCR.

Discussion: This EDCR completes the install of new thermowells and RTD's on unit two. **This EDCR was initially part of EDCR 52326 – RTD bypass removal – but was split off into three EDCRs** (the other is for FIS removal – 53188).

Originally unit one and two were equipped with a bypass line around the steam generators and reactor coolant pumps (RCP) to measure temperature. This was modified in unit 1 into the current configuration which utilizes thermowells installed in the hot/cold legs and RTDs placed inside the thermowells.

In unit 1, every loop has...
- 3 Narrow range (NR) T_{hot}
- 2 NR T_{cold}
- 2 wide range (WR) T_{hot}
- 1 WR T_{cold}

In unit 2, each loop currently has...
2 NR T_{hot} – being removed as part of EDCR 52326
2 NR T_{cold} – being removed as part of EDCR 52326
2 WR T_{hot}
1 WR T_{cold}

Related EDCRs
- EDCR 52319 will install the Eagle-21 system
- EDCR 53301 will install all the external wiring for Eagle-21. This will pick up at the outboard side of the steel containment vessel penetrations.
- EDCR 52326 removes the bypass line (work is complete)
- EDCR 53756 installs thermocouples in pre-existing hot leg thermowells that feed the auxiliary control room.
- EDCR 54639 installs low voltage cabling in the reactor building. This is a co-requisite to this EDCR

Applicable DCNs/ECNs
The package that did the bypass elimination effort for unit 1 was the ECN Modification package **ECN E110012**.

DCN S08146 – added that the WR T_{cold} RTDs are required for Regulatory Guide 1.97 Post Accident Monitoring. The following items were physically or administratively done and must be accounted for within this EDCR
- Revise "I-tabs" – this is being done with the MEL package.
- Revise Demonstrated Accuracy Calc 1-TE-68-001 – this is being done as an open item
- Revise the 10CFR50.49 list to add PAM designators to the conduit seal assemblies. This is being done by the Electrical group's MEL package.

- Revise system 68 category and operating times calculation **WBN-OSG4-017** to incorporate the PAM category and operating times (WBN-OSG4-049). This is being done as an open item.
    - This calculation has a UVA that all unit 1 design changes will be made to unit 2 via EDCRs and DCNs. This calculation is applicable and has been added as an open item.

DCN S018147 – added that the WR T_{hot} RTDs are required for Regulatory Guide 1.97 Post Accident Monitoring. The following items were physically or administratively done and must be accounted for within this EDCR.

- Revise "I-tabs" – this is being done with the MEL package.
- Revise Demonstrated Accuracy Calc 1-TE-68-001 – this is being done as an open item
- Revise the 10CFR50.49 list to add PAM designators to the conduit seal assemblies. This is being done by the Electrical group's MEL package.
- Revise system 68 category and operating times calculation **WBN-OSG4-017** to incorporate the PAM category and operating times (WBN-OSG4-049).
    - This calculation has a UVA that all unit 1 design changes will be made to unit 2 via EDCRs and DCNs. This calculation is applicable and has been added as an open item.

Thermowells – The bypass line being removed by EDCR 52326 is connected to the loops in three places. The first was a set of three 2" connections between the vessel and S/G (hot leg). The next was a single 3" line between the S/G and RCP (cold leg), and the last was a single 2" line between the RCP and vessel. See the as designed drawing 47W813-1.

- The **2 WR** T_{hot} and **1 WR** T_{cold} thermowells in each loop currently exist and will be re-used. These are not, and were never part of the bypass line.
- The **3 NR** T_{hot} thermowells per loop will be constructed from the three 2" connections where the bypass line connects between the vessel and S/G. These are 120° apart with one connection at 0°.
- **1 of the 2 NR** T_{cold} thermowells per loop will be machined where the other 2" bypass line was – which was at the top of the pipe (or 0°). The other NR T_{cold} thermowell in each loop will be newly machined.
    - In unit 1, loop 2, 3, and 4's **NR** T_{cold} thermowells/RTDs are installed at the 12 o'clock and 10 o'clock positions while looking into the core. Loop 1's are at the 12 o'clock and 2 o'clock positions.
    - The Westinghouse FCN (WBT-D-318; FCN-WBTM-10764) will make loops 1 and 3 be at the 12 o'clock and 10 o'clock positions while loops 2 and 4 will be at the 12 o'clock and 2 o'clock positions. Bechtel Engineering believes this is acceptable because loops 1 and 3 flow clockwise while loops 2 and 4 flow counter-clockwise. Note there is interference with the already existing loop 3 **WR** thermowell that forces this configuration.

A total of twenty thermowells will be machined in some capacity.

Thermowells and associated welds are ASME class 1.

Thermowells will be installed per Westinghouse's FCN (see index) and welding specification (see welding section).

3" Caps

The predecessor EDCR 52326 left around 3 feet of the 3" pipe. This EDCR will cut this down before welding the caps. See plant design's DRA's and the associated FCN for details. The caps do not have UNIDs.

Installation of caps will be per Westinghouse's FCN (see index) and welding specification.

RTD's

This EDCR will install 4 WR T_{hot} and 4 WR T_{cold} RTDs in the pre-existing thermowells. These will be RDF Corporation's model **21205**. The other four remaining WR T_{hot} (one per loop) sensors are thermocouples and are for the auxiliary control room. Installation of the auxiliary control room thermocouples are part of EDCR 53756.

This EDCR will install RTD's in each of the newly machined NR thermowells (three for hot and two for cold) for a total of five per loop. These will be RDF Corporation model **21465**.

Therefore a total of 28 RTDs will be installed.

RTDs will be installed according respective sections of their associated technical manuals, already processed and approved in BSL. Construction notes have been added to DRA's 52987-001 through 004.

NR RTD model 21465	VR-WBC-0169	section 4.0
WR RTD model 21205	VR-WBC-0170	section 4.0

The pigtails will connect to their associated junction box. If there is excess cable, route and store excess cable in a coil box. All junction boxes exist, the coil boxes do not. The field will install the coil boxes per standard installation details 47A056-217 series. The coil boxes are safety related and mounted to seismic category I (note the boxes themselves were procured as quality related only, but mounted as safety related). These coil boxes were never assigned UNIDs for unit 1.

The exact location of the coil boxes will be determines by the field. There are multiple surfaces in these areas available for mounting. If the field determines that the boxes need to be mounted to high density concrete as defined in EDCR 52977 (mostly on the environmental shield wall in this vicinity), an FCR and Civil Engineering concurrence will have to be obtained prior to installation. There is open item OI-52987-11 for evaluation of mounting location by ESQ/civil.

The field will support the RTD pigtails in accordance to the instructions on Westinghouse drawings 3D20476 and 2650C31 along with Category I Support Conduit Typical drawing 47A056-200B. (Only deviation is to the Narrow Range RTD pigtails - 3D20476 is more restrictive in their support requirements at 24" between clamps vice 4 ft 6"). In order for the 15" requirement to the first support to be met, an additional support will need to be engineered. This is a planned FCR. The Unistrut will be supported according to 47A051-46 series.

Conduit Seals

The narrow range RTDs supplied by Westinghouse will have their own environmentally qualified conduit seals (Conax is the provider). This is like the arrangement for unit 1. These do not have associated UNIDs.

The wide range RTDs supplied by Westinghouse will not have conduit seals. These will be procured separately under MR 25402-011-MRA-EYM0-00002 from electrical. These seals have UNIDs, are part of the MEL package, and are separate EQ components. Construction is to install them according to detail F3 on AD drawing 45W883-3 (there is a DRA to change this drawing to make it like unit 1).

RTD Cabling
There is no cabling in this EDCR.

Welding
All welding will be done by PCI Energy Services, a subsidiary of Westinghouse Electric Company Welding & Machining, LLC. The welding will be in accordance with PCI's welding program and approved Westinghouse *Equipment Specification 679170.* (25402-011-V1A-MG00-01362-001).

Appendix R
The WR RTDs are appendix R components.

Items to Procure
- Conduit seals (or Conax seals), coil boxes - electrical

Open Items
See open items form

Acceptance Testing
Acceptance testing will be handled by startup.

Applicable DC/DS/TS/ES
- WB-DC-40-36 *The Classification of Piping Pumps, Valves, and Vessels*
- WBNP-DS-1935-2473 – *ASME Section III, nuclear class 1 piping system*
- WB-DC-40-31.12 – *Seismic/Structural Qualification of Seismic Category I and I(L) In-line Valves and Other In-line Fluid System Components*
  See section 2.3
- WB-DC-30-7 R22 – *Post Accident Monitoring Instrumentation.* Establishes that wide range T_{hot} and T_{cold} are variables that fall under Regulation Guide 1.97. See table A-1, variable number 11, 12.

PERS in question
- **149850** – This PER started when a TW downstream of the steam isolation valves began leaking nuclear steam in Browns Ferry. A huge analysis was done to find other TW in the plant that could cause similar problems. The concern is FIV – flow induced

vibrations – that is more of a concern for steam systems due to the higher velocity. All the other thermowells found to have potential for the same problem were all for the secondary system. Therefore this PER is not applicable to these thermowells since they are for the primary.

- **74383**
  - This began with a GE augmented task report T0316 "augmented main steam, feedwater, and recirculation TW Evaluation for Flow induced vibrations – FIV"
  - Looking at the list of TW that would need design change modifications, all were secondary TWs. This PER is not relevant to this EDCR.
- **145147** – Westinghouse RTD cables were not installed correctly according to the drawings. For example the drawings require no more than 24" separation, but this was routinely violated. This is applicable to the RVLIS RTD's
  - This appears to mostly be a construction issue, but there were not as good document control as exists currently so it was difficult to identify applicable vendor drawings.
- **172642** – Install RTD cables inflexible stainless steel conduits. This EDCR is resolving this PER

Important Documents

47W813	RCS flow diagram – see both AD and AC drawings
2-47W610-68-1 to 4	Reactor coolant control diagrams – u2
2326D52	NR T_c thermowell for newly drilled
5365C47	NR T_c boss for newly drilled
1836E26	NR T_c install instructions for newly drilled
1847E84	NR T_h thermowells
9558D95	NR T_h scoops
1847E83	NR T_c thermowell where bypass was
1871E46	NR T_c install instructions and nozzle where bypass was
5365C17	Cap
2D33462	Nozzle and cap
WBN2-PD-068-141-01	**walkdown** Flow diagram loop 1
WBN2-PD-068-141-02	**walkdown** Flow diagram loop 2
WBN2-PD-068-141-03	**walkdown** Flow diagram loop 3
WBN2-PD-068-141-04	**walkdown** Flow diagram loop 4
2-47w611-68-1,2,3	Logic diagram – inputs from the WR RTDs
45N2616-8	RTD wiring diagram U2 AD
45N1616-8	RTD wiring diagram U1 AC
WBN2-E-275-485-00	R-2 **walkdown**
WBN2-E-275-577-00	R-6 **walkdown**
WBN2-E-275-589-00	R-10 **walkdown**
WBN2-E-275-598-00	R-13 **walkdown**
SSD-T-68-01	RCS Loop 1 wide range hot leg temperature (by W)
SSD-T-68-18	RCS Loop 1 wide range cold leg temperature (by W)
SSD-T-68-24	RCS Loop 2 wide range hot leg temperature (by W)
SSD-T-68-41	RCS Loop 2 wide range cold leg temperature (by W)
SSD-T-68-43	RCS Loop 3 wide range hot leg temperature (by W)
SSD-T-68-60	RCS Loop 3 wide range cold leg temperature (by W)
SSD-T-68-65	RCS Loop 4 wide range hot leg temperature (by W)

SSD-T-68-83	RCS Loop 4 wide range cold leg temperature (by W)
SSD-T-68-02	RCS Loop 1 delta T average (by W)
SSD-T-68-25	RCS Loop 2 delta T average (by W)
SSD-T-68-44	RCS Loop 3 delta T average (by W)
SSD-T-68-67	RCS Loop 4 delta T average (by W)

AREAS OF RESPONSIBILITIES:

Control Systems – Lead on package

Electrical
- Procurement of conduit seals, coil boxes
- MEL package conduit seals, coil boxes

Civil/ESQ
- Certification of safety related RTDs and their installation details. Approval of seismic reports from Westinghouse (open itemed).
- Approval of mounting of coil boxes.

Mechanical
- DRA for 47W813-1 – RCS flow diagram

Plant Design
- Piping removal related to this piping system is addressed in EDCR 52326 and documented in stress calculations as shown in the listed EDCR package. Loop modifications in addition to thermowells are addressed by Westinghouse's FCN.

Westinghouse/PCI
- Procurement for thermowells, RTDs, bosses and caps
- Welding of thermowells and caps (Westinghouse has hired PCI Energy Services – contact is Barry Smith and Ileana Santiago)
- FSAR markups

EDCR UNIT DIFFERENCE FORM

EDCR# 52987 **Rev.** A **Page No.** 17

Operations Difference is identified as follows:

In unit 1, loops **2, 3, and 4**'s narrow range (NR) T_{cold} thermowells/RTDs are installed at the **12 o'clock** and **10 o'clock** positions while looking into the core. Loop **1's** are at the **12 o'clock** and **2 o'clock** positions. In unit 2 Westinghouse's FCN (WBT-D-318, FCN-WBTM-10764) modifies this to make loop **1** and **3** the same (**12 and 10 o'clock**) and loops **2** and **4** the same (**12 and 2 o'clock**).

Due to the difference in orientation of the thermowells in unit 1, loop 1 which is different than the rest has the lowest of all the loop temperatures for the "B" RTD, or the RTD at 60° from the vertical. However, this difference is minimal. Using TVA's DataWare historical data program and examining the temperatures and different times in life (Sep 2009, August 2005, and August 2002 were examined and plotted), loop 1's "B" RTD is always the coldest, but sometimes by 0.1°F, sometimes 0.5°F, but never greater than 1°F from the next coldest.

In conclusion, the operational difference is that the "B" RTDs will have slightly different values than seen on unit 1. Bechtel Engineering believes this minimal difference shown by historical data to be no more that 1°F is acceptable.

S B Nichols for Tom Wallace 10/16/09
Unit 2 TVA Operations Acceptance (Mgr or Designee): **Date:**

Maintenance Difference is identified as follows:

The same model number of RTDs will be used as in unit 1. There will be no maintenance difference.

B T Brady 10/16/09
Unit 2 TVA Maintenance Acceptance (Mgr or Designee): **Date:**

Engineering Difference is identified as follows:

- The location of the NR T_{cold} thermowells compared to unit 1 (discussed in detail in the Operations section) is an engineering difference. The same components are being used so there will be no weight differences. This difference is too specific to have any impacts to the System Descriptions (N3-68-4002 *Reactor Coolant System* and N3-99-4003 *Reactor Protection System* were reviewed) nor licensing basis documents.
- The thermowells and RTDs will have the same manufacturer and model numbers
- The coil boxes will have UNIDs, unlike the unit 1 coil boxes.

William D. Crouch 10/16/09
Unit 2 TVA Engineering Acceptance (Mgr or Designee): **Date:**

Mat Merten 10/15/09
Prepared By: **Date:**

SESG TO ROUTE A COPY OF THIS COMPLETED FORM TO TVA TRAINING MANAGER AND TO UNIT 2 LICENSING.

Streamlined EDCR approved by TVA Oversight N/A

ENCLOSURE 1

Responses To Licensee Open Items To Be Resolved For SER Approval

ATTACHMENT 8

(This Attachment contained on the OSM)

EDCR 52601 (RVLIS) Excerpt

NRC RAI Letter 6/18/10
Attachment 8

LEGIBILITY EVALUATED AND ACCEPTED FOR ISSUE.
Mat Merten 6/3/10
SIGNATURE DATE

EDCR COVER SHEET All pages rev A

GENERAL INFORMATION			Page No. 1
EDCR TYPE (Check One Box Only)	☐ EDCR #		Rev.
	☒ EDCR-2 #	52601	Rev. A

☐ Check here if this is a Streamlined EDCR.
☐ Check here if this EDCR is for Documentation change only & No construction work is required.
☒ SR ☒ QR Check appropriate box if field material procurement quality requirements included.

068, 304, 663	RB/AB	various	SR	I&C	ASME class 2
System	Building	Elevation	Quality Class	Lead Discipline	Code/Class

WORK SCOPE STATEMENT:

Installs the unistrut, capillary, density compensating RTDs, and piping for the Reactor Vessel Level Indication System (RVLIS). The remainder of RVLIS, mostly consisting of local panel instruments, will be done on EDCR 55385. Reference Westinghouse contract WBS 2.6.2.7.

PREPARED:			VERIFIED:	
Mat Merten, PE	632-6626	5/27/10	MITCHELL AMITRANO	5/27/10
Design Engineer	Phone	Date	Engineer	Date

APPROVALS:		INTER DISCIPLINE REVIEWS:	
A.P. AGARWAL	5-20-10	TAPAS DAS (ONLY PR)	5/20/10
Civil EGS	Date	Civil Engineer	Date
FRED DIMITRAN	5/27/10	MITCHELL AMITRANO	5/27/10
I&C EGS	Date	I&C Engineer	Date
BC Anil Kumar ANIL C. BANGALORE	5/21/10	David A. Major	5/21/10
Electrical EGS	Date	Electrical Engineer	Date
Roshellia Goines Roshellia Goines	5/20/2010	W. McCune Chris McCune	5-20-10
Mechanical EGS	Date	Mechanical Engineer	Date
N/A		N/A	
Plant Design EGS	Date	Plant Design Engineer	Date
RE Smith Roger E. Smith	6/3/10	N/A	
Project Engineering Manager	Date	DELETED	Date

ACCEPTANCE:		OTHER ORGANIZATIONS:	
		Reviewed Materials Only	
See page 1a		S.A. Yoder Sarah A. Yoder	6/3/10
Responsible Superintendent (If Constructability Walkdown is waived, this is N/A)	Date	Signature/Org'n.:	Date
See page 1a		N/A	
Field Engineer (If Constructability Walkdown is waived, this is N/A)	Date	Signature/Org'n.:	Date
EE Freeman			
D77 5/27/10	6-3-10	N/A	
TVA Engineering Manager	Date	Signature/Org'n.:	Date

Refer to the electronic documents in TVA Business Support Library (BSL) for current revision.

10 JP 5-25-10
This form is the same format as the current 05-19-10 revision.
This applies to all ten pages of work scope.
Jimmy Perkins

EDCR COVER SHEET

GENERAL INFORMATION			Page No. 1a
EDCR TYPE	☐ EDCR #		Rev.
(Check One Box Only)	☒ EDCR-2 #	52601	Rev. A

☐ Check here if this is a Streamlined EDCR.
☐ Check here if this EDCR is for Documentation change only & No construction work is required.
☒ SR ☒ QR Check appropriate box if field material procurement quality requirements included.

068, 304, 663	RB/AB	various	SR	I&C	ASME class 2
System	Building	Elevation	Quality Class	Lead Discipline	Code/Class

WORK SCOPE STATEMENT:

Installs the unistrut, capillary, density compensating RTDs, and piping for the Reactor Vessel Level Indication System (RVLIS). The remainder of RVLIS, mostly consisting of local panel instruments, will be done on EDCR 55385. Reference Westinghouse contract WBS 2.6.2.7.

PREPARED:			VERIFIED:	
Mat Merten, PE	632-6626			
Design Engineer	Phone	Date	Engineer	Date

APPROVALS:		INTER DISCIPLINE REVIEWS:	
Civil EGS	Date	Civil Engineer	Date
I&C EGS	Date	I&C Engineer	Date
Electrical EGS	Date	Electrical Engineer	Date
Mechanical EGS	Date	Mechanical Engineer	Date
Plant Design EGS	Date	Plant Design Engineer	Date
Project Engineering Manager	Date	DELETED	Date

ACCEPTANCE:		OTHER ORGANIZATIONS:	
James C. Calbaugh James C. Calbaugh 5/20/10 Responsible Superintendent (If Constructability Walkdown is waived, this is N/A)	Date	Signature/Org'n.:	Date
George Gilley 5/20/10 Field Engineer (If Constructability Walkdown is waived, this is N/A)	Date	Signature/Org'n.:	Date
TVA Engineering Manager	Date	Signature/Org'n.:	Date

EDCR COVER SHEET (continued)

WORK SCOPE STATEMENT (CONTINUED):

The EDCR procedure was reviewed and no corrections need to be made to the in-process EDCR to comply with the technical requirements listed herein.

This EDCR is to install the first phase of the Reactor Vessel Level Indication System. The rest of the system will be installed in EDCR 55385 (this is being driven by the receipt of as-built hardware drawings).

Phase 1 (EDCR 52601) consists of

- Unistrut (reactor and auxiliary buildings)
- Capillary tubing
- Compensating RTDs
- Steel containment vessel penetration connection
- concrete shield wall sleeves(DCN 55050(ABSCE Reversal) is a predecessor for doing the work on the concrete shield wall sleeves)
- crane wall sleeves
- Piping **(done by FCR)**

Phase 2 (EDCR 55385)

- Local panel work
- Mounting rest of instruments
- Tee "above seal table"
- System Fill

EDCR 55385 is a co-requisite to this EDCR.

Applicable WITEL codes are

AP2	New EDCR
XP9	ASME Related
L19	FSAR
CP11	Instrument Sensing Lines
CP6	Equipment Seismic Qualification

BACKGROUND:

Unit one and two RVLIS systems were designed with ECN 2329 in September 1980. ECN 5513 separated the two unit's RVLIS systems in 1985. From 1985 and 1987 unit 1 and 2 RVLIS systems were being designed separately. The last modification done to unit 2 was with ECN 6772. All subsequent modifications (ECNs and DCNs) were done on unit 1 only. **RVLIS was partially installed in unit 2.**

EDCR COVER SHEET (continued)

This EDCR does not incorporate any electronic signal once it leaves any component and enters into Common Q (EDCR 52351) or Eagle 21. This EDCR begins at the tap upstream of each root valve for the hot legs and head, and at the seal table tee for the bottom connection.

The tee below the seal table for mid-loop monitoring will be installed with EDCR 53756; however Westinghouse is supplying it under the RVLIS WBS.

Changes made to unit one's RVLIS system

- **DCN 51287** - Replaced RVLIS tee fitting at Seal Table with a Swagelok deep bore compression fitting. This tee is being installed under EDCR 55385.
- **DCN 17371** - SCV (secondary containment vessel) penetrations have capillary tubes rigidly attached to them. DCN reworks tubes to provide sufficient flexibility at SCV attachment (Penetrations: X-084B, X-084C, X-084D, X-087B, X-087C, X-087D). This is to meet the requirements of N3E-934 3.21.2.3. Additionally this relieves the requirement of placing clips every 2ft 3in and allows 60 in while penetrating the concrete shield wall sleeves due to their depth.
    - The requirement is to leave an extra 5" to the actual distance between the connections. No more than 18" can be used.
    - Allows maximum span of 60" through the shield building sleeve since it is not possible to place clips within the sleeve.
    - This is being accomplished with construction note #7 and #8 on DRA 52601-09
- **DCN 51459** - Replaced valve 1-RTV-068-0454A due to external borated water leakage. The change was for a same type valve. No modification necessary
- **EDC 51844** – Provides alternate support design of the capillary tubing while it goes through the "refueling water canal". Has a two part clamp – see 47A052-43,43A,43B
    - DCN allows for an alternative connection on the top half of the mount via a separate bolt. It includes a sheet metal cover to the clamps and tubing.
    - Change being incorporated
- **DCN 16781** – Went through and made various repairs to the welding on the Unistrut. This correlates with the two calculations which qualified the capillary discussed later in this document. Change being incorporated with construction note on DRA 052601-09
- **DCN 17380** – Adding new supports and welds to capillary trays. Change being incorporated with construction note on DRA 052601-09
- **SCR WBNNEB8522R0 (associated PER 143774)** – SEE WRITE-UP IN "Affected PERS" SECTION OF THIS DOCUMENT
- **DCN 30066** – In the vicinity of the Unistrut from train A's seal table connection there is the 10" cold leg injection pipe. During a pipe rupture, the Unistrut and capillary tube could undergo damage and thus extra supports were added. No action taken in this package. See routing capillary section for explanation and more details.

Affected PERS

- Significant condition report (SCR) WBNNEB8522 (tracked under **PER 143774**) stated that the RVLIS RTDs were not adequately qualified for chemical spray. The corrective action was to protect the pigtails from submergence and chemical spray by providing a qualified seal
    - Westinghouse is providing a Minco RTD with an ethylene propylene rubber insulation and hypalon jacket which is weather proof. See 2654C65.

EDCR COVER SHEET (continued)

- Still must be protected against flood since multiple RTDs are below the flood level of 720ft. See drawing 47E235-45
- The corrective action is to have the cable termination assembly above the flood line. On Bechtel's request, Westinghouse will provide 3 additional RTDs with 75 ft pigtails for the keyway.

Related EDCRs

- 55385 - RVLIS phase 2
- 52319 - Eagle-21 system
- 53301 - external wiring for Eagle-21
- 52351 - Common Q system - signals from RTDs go to Common Q.
- 53756 – Installs the tee "below the seal table" as part of the MID Loop Monitoring installation. (the tee will be provided with the RVLIS WBS 2.6.2.7)
- 55231 - bulk cabling package reactor building

Items to procure

(Fittings and tubing to be procured on this EDCR. Other material to be procured on later packages.)

- Westinghouse provided components - specifically RTDs and capillary - see WBS 2.6.2.7 (this WBS procures other items for EDCR 55385)
- Fittings, tubing, pipe
- Isolation valves
- Unistrut and associated clamps for capillary routing as needed. Construction will procure as safety related. The needed parts for each clamp are below. See 47A051-46.
  - P1000 Unistrut (or N1000 for nuclear version)
  - Clamp – P1006-1420 (or N1006-1420)
  - ¼" nut
  - ¼" bolt, at least 1.5" long to clear the top of the Unistrut. This is construction's decision.
- Sleeve materials to be procured as quality related

This EDCR's material requirements were reviewed with the PQAM or designee.

ASME

On the loops and head connections, there is a flow restrictor that changes the classification to TVA class B corresponding to ASME class 2. Downstream of the sensor bellows, the classification is "TVA Instrument Class" in accordance to N3E-934. This requires that the capillary system that penetrates primary containment shall be installed, fabricated, and inspected to TVA class B requirements (not procured).

Stress analysis will be done by plant design on the coded piping - see OI-52601-04.

There is an inconsistency between design criteria WB-DC-30-17 *Diaphragm and Bellows Seals and Capillary Systems* and Engineering Specification N3E-934 *Instrument and Instrument Line Installation and Inspection.*

The former states for capillary systems penetrating containment the "diaphragms shall be designed in compliance with ASME Section III, Paragraph ..." However, the latter lower tier document gives "special instructions... to account for material that cannot be supplied as ASME material". It states "diaphragm seal assemblies ... are considered outside ASME Section III Code requirements..." Unit 1's sensor bellows are not ASME code components.

WB-DC-30-17 will be revised or an exception made with EDCR 55385. There is no action required for this EDCR.

Steel Containment Vessel Penetrations See drawing 47W331-2 for penetration details
The penetration assemblies (X84 and x87) consist of a 6" diameter piece of bar stock , 3/8" thick with four 3/4" holes 90 degrees apart, which will hold four 3/4" pipes. Three of these pipes are used by RVLIS and the last is capped or used for something else.

Civil Engineering calculations WCG-1-1119 and WCG-1-1122 are complete for stress loading on the penetrations (see EDCR index).

The penetration assembly in unit 1 uses a piece of machined bar stock as part of the pieces to get from ¾" pipe to 3/16" tubing. This is not desired in unit two so a ¾" to ½" coupling unit will be used. This would then be connected to a ½" to ¼" tube adapter (Parker's Weld-Lok). These will both be socket welded for ease of install (vice butt welded). See detail on DRA 52601-09.

X87 – train A – MK 102 - 721' 6" - 306°
X84 – train B – MK 101 - 723' 0" - 307° 30'

Sleeves throughout Reactor Building
The two sleeves through the concrete shield wall are MK 102 and MK 101. The capillary will be stuck through a hole and filled with a sealant placed in the gap. See 47W600-109 note 9 – "fill sleeve with RTV foam, Dow-Corning silicone product..." The sleeves currently exist filled with a black substance, but there is no capillary going through.

According to DCN 17371, it allowed the capillary clips to be placed at 60" through the sleeve vice the required 25".

There are four other crane wall sleeves. The first two are MK484 and MK 485 that come from the seal table and goes inwards to meet with other tubing. The second of the two are MK411 and MK365 for all the capillaries leaving the inside of the crane wall to eventually exit the reactor building.

Bosses
The weld bosses are in Westinghouse's scope in accordance with the original WBS. However it has been determined that the bosses are installed.

RTD's
The RTDs exist for density compensation purposes for vertical sections of tubing. In unit 1 there are six RTD's on train A and five on train B. Less RTDs needed for unit 2 due to the difference in routing.

EDCR COVER SHEET (continued)

For example, there will be none used for the hot legs since this is horizontal. However this plan could change as the field begins their verification that the pre-existing Unistrut is mounted to seismic CAT I standards. If the field needs to make adjustments and these adjustments change the route, more or less RTDs could be used. See construction note #3 on DRA 009.

Since approximately 90% of the Unistrut is present, the location of the RTDs has been determined. . See LSWP 1334.

A RTD consist of a sensor that is banded to capillary held inside Unistrut, and the MI (mineral insulated) cable which is part of the pigtail. This pigtail can reach 75ft long, will connect to the field cable, and will eventually connect to Common Q PAMS. See more details in the following section.

- Common Q can accept a maximum of eight RTDs per train.
- The excess MI pigtail will coiled and spliced per EDCR 55231.

The field will support the RTD pigtails in accordance to the instructions on Westinghouse drawing 2654C65 along with Category I Support Conduit Typical drawing 47A056-200B. The Unistrut will be supported according to 47A051-46 series.

Junction Boxes, Coil Boxes, and Conduit Seals

The RTD's excess pigtail will be coiled and spliced with a conduit seal. **All conduit seals must be above the surge flood level of 720ft** (reference 2-47E235-41). A coil box may or may not be used. The conduit seals, coil/junction box, and termination to the pigtail are being done with EDCR 55231 (specifically with an FCR).

What follows is the approximate location of the coil boxes obtained via walkthrough to be used with EDCR 55231. The boxes will be installed by the field at their discretion. These are possible locations based on the limitations of the situation (flood level, pigtail length, box size, and available space).

TE-68-376 and 383 - train A and B - Guide Tube RTDs in Keyway
Due to limited unit 1 documentation, how the pigtail exits the Keyway is not known.

TE-68-377 - Train A - Seal Table and Head
Elevation 726.1 ft
Azimuth 72 degrees
Mounted on the lower azimuth side of pressurizer relief tank

TE-68-378 - train A - Head RTD #1
Vicinity of 46 degrees
Mounted on ceiling
Elevation (Approx) 754ft
Within 10ft of blowout window

TE-68-379 - train A - Head RTD #2
Elevation 740ft
Azimuth 72 degrees
Crane wall

TE-68-384 - train B - Seal Table and Head
Elevation 725.6ft
Mounted on inboard side of pressurizer housing 9ft above grating - this avoids the permanent ladder.

EDCR COVER SHEET (continued)

Azimuth (approx) 110 degrees

TE-68-385 - train B - Head RTD #1
Mounted on ceiling
Vicinity of 90 degrees
Elevation 754 ft
Within 10ft of blowout window

TE-68-386 - train B - Head RTD #2
Elevation 739ft
Azimuth 100 degrees
Crane Wall

TE-68-393 - train B - Seal table and Head
Elevation >720ft
Azimuth 202°
On inside of crane wall

Installation and Routing of Capillary Tubing and Capillary RTDs
The pre-existing unistrut will be utilized to route as much capillary as possible. There are however gaps of a few feet, see LSWP 1334.

Note that Westinghouse will provide 11 RTDs with 25ft pigtails (2 for 1" tubing and 9 for 3/16" tubing – but both with 25ft pigtails), and three more with 75ft pigtails.

The use of Unistrut mounted in a circle to wind up excess capillary will not be used (these are referred to as "Christmas trees"). All capillary will be cut to fit.

There is a series of documents that provide guidance and establish requirements on how to route/mount capillary tubing within Unistrut.

47A051 series – see specifically 47A051-46 series along with 47A051-01 series
- Max distance between welds or braces is 65" (5ft and 5in)
- Max space between bolt w/ spring nut and holding plate is 2'-3"
- Maximum of 7 capillaries in each tray
- Torque requirements of bolt and lock nut.
- Maximum cantilevered free end length is **6"**

N3E-934 – engineering specifications
- Instrument lines shall not be field routed within NUREG-0612 interaction areas as shown on 44W411. See 3.7.2.1.1
    - According to 44W411-7 the head sensor bellows are located within a NUREG interaction area. However this program has not come alive yet for unit 2, so no coordination can be done.
- Minimum bend radius is 3 inches. Bending will be performed by hand.
- Capillary systems which penetrate containment shall be installed, fabricated, and inspected to TVA class B (ASME class 2) requirements
- Brazing of SS cap tubing will be iaw G-29 Process Specification 1.E.2.3
- Trains separated by minimum of **18"**
- The pressure test will be to 1.5 times design pressure.

47W600-0-4

- Capillary tubing < 3/16" shall be routed in P-1000 Unistrut.
- Maximum interval between bolt/spring/plate assemblies is 48". Note this is greater than the 25" mentioned in 47A051.
- Continuous support at corners is not required
- Exposed capillary kept to less than 6"

47A052 series

- This has a separate setup than the Unistrut that is only used in the "refueling water canal". See DCN 51844M for more information.

In unit 1, train A's seal table Unistrut had to be reinforced in two places with DCN 30066 (see DRA W30066-01). This was due to a 10" cold injection pipe that was deemed too close that during a rupture, damage to the capillary and Unistrut would be caused by jet impingement. Therefore two extra supports were added. This similar work will be captured with the jet impingement program and any corrective actions from this will be captured via FCR.

Applicable DC/DS/TS/ES and Procedures and other requirements

- **WB-DC-30-16** – Instrument Sense Lines – slope and separations. This is not for closed capillary systems. **This DC is mostly applicable to capillary before the sensor bellows,** however there are a few applicable requirements.
  - Minimum separation between trained capillary is 18"
  - Minimize line length due to increased potential of having sensing line configurations which can trap gas or air at high points in liquid filled lines.
  - If it is necessary to route a liquid filled sense line with an upward slope, a vent valve shall be placed at the high point in the line and have a loop seal at the root.
- **WB-DC-30-17** – *Diaphragm And Bellows Seals and Capillary Systems*
  - Volumetric displacement of the pressure sensing device shall be less than full span volumetric displacement of the diaphragm/bellows seal.
  - Section 3.7.1 states the diaphragms shall be designed in compliance with ASME section III paragraph NC-3649 → this seems contradictory to N3E-934 and the ASME code. See a more detailed comment in the ASME section.
  - Armored capillary shall be used when available to reduce potential for physical damage to the capillary tube.
  - Minimum bend radius supplied by manufacturer. If no specification is provided, then assume the minimum bend radius shall be 3 times the outside diameter of the capillary tubing.
- **N3E-934** – Instrument line installation inspection – Engineering Specifications
  - States that capillary tubing which penetrate primary containment shall be installed, fabricated, and inspected to TVA class B (ASME class two) requirements.
  - See Appendix E for capillary lines exiting containment.
- **WB-DC-40-36** *The Classification of Piping Pumps, Valves, and Vessels*
- **WBNP-DS-1935-2618** – *ASME Section III, Nuclear Class 2 Piping System*
- **IMI-122.004** backfilling, venting, flushing and/or draining of instrument sensing lines and instruments
- **MAI-4.4A** instrument line installation
- **TI-208** Design of supports for category I piping and instrument lines
- **47W600-0-4** – various mounting and routing requirements
  - Has requirement that 3/16" OD or less must be in UNISTRUT - see 47a051

- **WB-DC-40-34** – *Containment Isolation System* – Section 7.6.1 states RVLIS should not use any containment isolation valves because it would jeopardize the performance of the system.
- **WB-DC-30-7** – *Post Accident Monitoring Instrumentation* – establishes that reactor vessel level is a post accident monitoring needed parameter, see table A-1 variable 22.
- **WB-DC-40-31.9** - *Criteria For Design of Piping Supports and Supplemental Steel in Category I Structures*

Planned Open Items
See open items list.

Note that NUREG section 0612 (see N3E-934 3.7.2.1) interaction area interference evaluation will be done separately. Any changes to RVLIS from this would be with the FCN process unless this program comes alive before the final package.

Required Calculations
- Qualification of capillary clamps in refueling water canal (47W052043)
- SCV Penetration X-84 nozzle and shell evaluation (WCG-1-1119)
- SCV Penetration X-87 nozzle and shell evaluation (WCG-1-1122)

There were two calculations done for unit 1 that certified the routing of the capillary for each train. These were performed due to limited guidance for the field routing of the capillary at the time of installation. See...
- Qualification of capillary tray instrument panel L-388 (TEACEBEMG43)
- Qualification of capillary tray instrument panel L-340 (TEACEBEMG44)

For the Unit 2 installation, the requirements in section 3.21 of N3E-934 are imposed upon this EDCR and thus the qualification of capillary tray verification calculations are not required.

EDCR OPEN ITEM FORM

EDCR# **52601** **Rev. A** **Page No. 18**

Open Item Type	Check all Applicable
Calculation	X
Vendor Information	X
ICRDS Reports	
Drawing/DRA	X
DELETED	
DELETED	
Environmental Qualification – EQCS Issuance	X
Appendix R	
DELETED	
Other:	

Open Item Details:

Open Item Number	Open Item Description:
OI-52601-01	Setpoint and Scaling Document (SSD) supporting calculation(s). Name to be determined.
OI-52601-02	EQ Change Supplements for the RVLIS RTDs.
OI-52601-03	Approve RVLIS RTD Seismic Report (Westinghouse).
OI-52601-04	Sense line interface configuration drawings (4) associated with root valves 2-RTV-68-453A (head), 2-RTV-68-454A (hot leg 1), 2-RTV-68-455A (hot leg 3), and 2-RTV-68-387A (seal table); along with physical DRAs.
OI-52601-05	Revise Reactor Coolant system (68) NUREG-0588 Category and Operating Times calculation

EDCR OPEN ITEM FORM

Action Plan for Open Item:

Open Item Number	Open Item Action Plan
OI-52601-01	Receive, review, and approve SSD supporting calculations from (at time of this writing) Westinghouse. Ensure that supporting calculations are received for all relevant SSDs as listed in the Electrical and I&C Calculation Checklist. Note that one supporting calculation may be relevant to multiple SSDs. The resolution of this open item will not require a revision to this EDCR.
OI-52601-02	Issue change supplement. The resolution of this open item will not require a revision to this EDCR.
OI-52601-03	Approve RTD seismic reports (Westinghouse). The resolution of this open item will not require a revision to this EDCR.
OI-52601-04	I&C prepare isometric drawings. Plant Design prepare stress analysis on root valve piping and generate physical DRAs. Remove "HOLD" on DRA 52601-009. The resolution of this open item will require a revision to this EDCR.
OI-52601-05	Revise Reactor Coolant system (68) NUREG-0588 Category and Operating Times calculation WBNOSG4017 to incorporate the design that two of the RTDs that are used in unit 1 will not be used in unit 2 (see scope statement for why this is occurring). These two RTDs are TE-68-373 and TE-68-380. The resolution of this open item will not require a revision to this EDCR.

Action Taken:

Open Item Number	Action Taken for Closure:
OI-52601-01	
OI-52601-02	
OI-52601-03	
OI-52601-04	
OI-52601-05	

Completed By: **Date:**

Verified By: **Date:**

This attachment provides topics to be considered when evaluating the technical and safety aspect of changes being implemented in WBN Unit 0 and/or Unit 1 by the EDCR-2 process; see Reference 5.0A. It is not intended to be an all inclusive list of items to be considered. It is to be used as an aid in determining attributes that should be addressed in a technical evaluation. Information is also provided to aid in determining coordination interfaces. These are minimum guidelines which are primarily excerpts from SPP-9.3. It should be recognized that many topics and changes involve multiple disciplines and organizations and technical considerations must be coordinated accordingly. All parts of Attachment 1 must be considered for applicability for the associated EDCR-2.

EDCR UNIT DIFFERENCE FORM

EDCR# 52601 **Rev.** A **Page No.** 43

Operations Difference is identified as follows:

RVLIS is being installed in the same fashion as unit 1 and there should be no operating difference.

Note that RVLIS signals feed into ICCM-86 in unit 1 and Common Q PAMS (EDCR 52351) for unit 2. This is a significant unit difference, but this change does not affect RVLIS or this EDCR. The analysis of these differences will be done with EDCR 52351.

SC Strickler SC Strickler for Tom Wallace 5/5/10
Unit 2 TVA Operations Acceptance (Mgr or Designee): **Date:**

Maintenance Difference is identified as follows:

The number and location of the RVLIS RTDs will be different. This is based on the routing of the capillary being different. This will affect corrective maintenance if the RTD fails.

The unistrut which contains the capillary was mostly installed in unit 2, and to save cost will be used. The Unistrut was field routed in both units so they are not the same. This has caused the location and number of the Unit 2 RTDs to be different than unit 1.

SC Strickler for Brian Briody 5/7/10
Unit 2 TVA Maintenance Acceptance (Mgr or Designee): **Date:**
SC Strickler

Design Difference is identified as follows:

- The routing of the capillary will be different. Approximately 80% of the Unistrut is already installed and will be used. Since RVLIS is a filled system, the route (including slope) will have no affect on the functioning of the system. Therefore this difference is technically acceptable.
  - The difference in route causes the location of the RTDs to be different. These different elevations are factored into Common Q with addressable constants in its reactor vessel level calculation.
- The mounting of the capillary to the ¾" pipe as part of the steel containment penetration (SCV) sleeve assembly will be different. There will be no piece of machined barstock as in unit 1. All items will be welded and this connection will be just a good of a union as on unit 1. Therefore this difference is technically acceptable.
- New Unistrut will be the nuclear grade version vice generic (the company Unistrut did not make nuclear grade version at the time of install into unit 1). The nuclear grade Unistrut (N1000) is essentially the same as the non nuclear grade (P1000) except it has better material traceability.
  - There are some very small differences in beam loading and column loading between the P1000 and N1000 versions of Unistrut. For example with an un-braced height of

This form is the same format as the current 05-19-10 revision.
JP Jimmy Perkins

72 in (47A051-46 requires 65") and a "K" value of 0.65 (mathematically describes the column end conditions - this value is a typical), vendor details stipulate a maximum column load of 4840lbs for P1000 and 4800lbs for N1000. This difference is negligible.

Therefore this difference is technically acceptable.

- One of the RTDs on each train will be in a Unistrut containing both a head and seal table capillary lines. Since no differential pressure is taken across these two taps, vertical sections must be temperature compensated. A single RTD will be used, vice two, and fed into Common Q which is sophisticated enough to use a single RTD for both compensation calculations. Therefore this difference is technically acceptable. This decision was made to save cost.
- The seal table isolation valve RTV-68-387A will be a changed to a 1/2" valve (unit 1 is a 3/4"). This valve has better isolation characteristics and is readably available.
    - This valve does contain a stellite disk (contains cobalt). This has been fully justified in the ALARA checklist of this package and has been agreed to by TVA radiation protection as being technically acceptable. The basic justification is this valve has no flow and is very far from the reactor (other end of the thimble tube).
    - The size of the valve does not affect any flow characteristics because there is no flow in this line, besides the minimal amounts of flow as pressure rises or falls (this valve is part of a sense line).
    - The size of the valve should not affect any response time because the orifice size is 0.25" (reference 47VD600-9-1) while the there is 3/8" tubing in this section of piping (in both unit 1 and unit 2). The 3/8" tubing is mark number 15A corresponding to 0.065" wall thickness (reference 47BM600-6) which corresponds with a 0.245" internal bore. Since the 3/8" tubing internal bore is smaller than the internal bore of the valve, this difference will not change any response time and is technically acceptable.
        - Downstream of the sensor bellows into the filled portion of RVLIS, the main section of capillary is even smaller 3/16" tubing which makes this change even more insignificant.
        - Note that regardless of the above argument, RVLIS has no response time requirement in the licensing basis.
        - Note that there is some conflicting documentation in unit 1 that states this valve is a 1/2" valve (making unit 2 the same). It is believed this piece of information is in error (MEL related documents). This analysis has taken the approach that said unit 1 valve is 3/4".

There will be other unit differences with the remainder of the RVLIS system installed under EDCR 55385. This is installing the local panels, sensor bellows, and high volume vents.

EDCR 52601-A
Page 45

EEFreeman 5-24-10

077 5/12/10

Unit 2 TVA Engineering Acceptance (Mgr or Designee): **Date:**

Mat Merten **5/8/2010**

Prepared By: **Date:**

Streamlined EDCR approved by TVA Oversight N/A

SESG TO ROUTE A COPY OF THIS COMPLETED FORM TO TVA TRAINING MANAGER AND TO UNIT 2 LICENSING.

EDCR 52601-A
page _____

EDCR UNIT DIFFERENCE FORM

EDCR# 52601 **Rev. A** **Page No. 46**

This second unit difference form is to encompass another difference as an action item from the Constructability Walkdown.

Operations Difference is identified as follows:

See previous unit difference form.

N/A
Unit 2 TVA Operations Acceptance (Mgr or Designee): **Date:**

Maintenance Difference is identified as follows:

See previous unit difference form.

N/A
Unit 2 TVA Maintenance Acceptance (Mgr or Designee): **Date:**

Design Difference is identified as follows:

A crane wall sleeve used for train A will change from MK-417 (a 20" sleeve) used in unit 1 to MK-365 (a 4" sleeve) to be used in unit 2. The Unistrut is already routed to this sleeve and appears to be the sleeve unit 2 construction was intending to use. This sleeve is within a few feet of the originally planned sleeve, but is far enough to meet train separation criteria. Since RVLIS is a filled capillary system, the route does not matter so the sleeve used does not matter to the functionality of the system. Therefore this difference is technically acceptable.

D77 5/13/10 EEFreeman 5-24-10
Unit 2 TVA Engineering Acceptance (Mgr or Designee): **Date:**

Mat Merten 5/13/2010
Prepared By: **Date:**

Streamlined EDCR approved by TVA Oversight_____

SESG TO ROUTE A COPY OF THIS COMPLETED FORM TO TVA TRAINING MANAGER AND TO UNIT 2 LICENSING.

This form is the same revision as the 05-19-10 revision. Jimmy Perkins

ENCLOSURE 1

Responses To Licensee Open Items To Be Resolved For SER Approval

ATTACHMENT 9

(This Attachment contained on the OSM)

New Eagle 21 Power Supplies In WBN Unit 1

Work Order Excerpt and Unit Difference Form

EDCR UNIT DIFFERENCE FORM

EDCR# 52319 **Rev.** A **Page No.** _____

Operations Difference is identified as follows:

No Operations Differences have been identified. Unit 2 Eagle 21 is functionally the same as Unit 1 Eagle 21. Any design differences will be transparent to Operations.

S Shelley S Strickler for Tom Wallace 3/15/10

Unit 2 TVA Operations Acceptance (Mgr or Designee): **Date:**

Maintenance Difference is identified as follows:

1. Unit 2 current input loops will be 4-20 mA. Unit 1 uses a combination of 4-20 mA and 10-50 mA current input loops. Per WBS 3.1 Unit 2 will use 4-20 mA transmitters in Eagle 21. 4-20 mA transmitters are the industry standard, require less power than the 10-50 mA transmitters, and qualified 4-20 mA transmitters are more widely available than the 10-50 mA transmitters. Some 10-50 transmitters used in Unit 1 are obsolete and no longer available for procurement. Unit 1 has already changed a number of Eagle 21 transmitters to the 4-20 mA standard.
2. Unit 2 Eagle 21 current output loops will be 4-20 mA. Unit 1 uses 10-50 mA output loops. Per WBS 3.1 Unit 2 will use 4-20 mA current loops in Eagle 21. 4-20 mA current loops are the industry standard. Indicators, recorders, etc. are more widely available for 4-20 mA than 10-50 mA loops.
3. Transmitter Auxiliary Power Supplies (TAPS) will not be required or provided for Unit 2. This is due to Unit 2 using 4-20 mA transmitters. 4-20 mA transmitters do not require the TAPS power supplies.
4. Eagle Analog Output Board impedance switch settings will differ from Unit 1. This is due to the 4-20 mA output signal change, changes in Westinghouse Inadequate Core Cooling Monitor (ICCM) design, and Foxboro Digital Control System changes.
5. Unit 2 Eagle 21 Racks will have a Luxcom OM101-AUI Fiber Optic Converter with SC type fiber connectors. Unit 1 uses a Fiber Com 7498 Fiber Optic Converter with ST type connectors in Racks 2, 6, 10, and 13 only. The Unit 1 Luxcom Fiber Optic Converter is obsolete and is no longer available for procurement.
6. Unit 2 Fiber Optic Converters will be powered from the associated Serial to Ethernet Controller through the AUI cable. Unit 1 Fiber Optic Converters are powered from the associated Rack 15V power supply bus. This is due to the different power requirements of the Unit 2 Luxcom Fiber Optic Converter. See item 5 above for more information.
7. Unit 2 Fiber network will be of the direct link type. Unit 1 uses a Dual Ring type fiber network. The Unit 2 Luxcom Fiber Optic Converters cannot be configured to operate in a ring fashion, the way the Unit 1 Fiber Com Fiber Optic Converters operate. See item 5 above for more information.
8. Upper level configuration drawings and assembly drawings for Unit 2 will differ from Unit 1. This is a change initiated by Westinghouse. See items 8, 9, and 10 in the Design Difference section for more information.
9. Two Man Machine Interface (MMI) Carts will be included in the Unit 2 Eagle 21 installation. These new MMI Carts are of a new generation and will have an updated touch screen and printer. The Fluke model touch screen and printer provided in the original Unit 1 MMI Carts are obsolete and are no longer available for procurement. MMI Carts provided with the Unit 2 installation are compatible with the Unit 1 Racks, and MMI Carts provided with the Unit 1 installation are compatible with the Unit 2 Racks.
10. The Eagle 21 Configuration Control Specification (411A66) will be revised by Westinghouse to reflect the Unit 2 Eagle 21 changes.

Brian Briody 3/15/10

Unit 2 TVA Maintenance Acceptance (Mgr or Designee): **Date:**

Design Difference is identified and justified as follows:

1. All Unit 2 current input loops will be 4-20 mA. Unit 1 uses a combination of 4-20 mA and 10-50 mA input loops. This difference in input current loops is achieved by using a 50 ohm dropping resistor in the input channel for a 4-20 mA input and a 20 ohm dropping resistor in the input channel for a 10-50 mA input. Unit 2 Eagle Analog Input Boards will remain the same as Unit 1.
2. All Unit 2 current output loops will be 4-20 mA. Unit 1 uses 10-50 mA output loops. This difference in output loops is achieved by using a type 1 Eagle Analog Output Board (EAO-01) for 4-20 mA loops. Unit 1 uses a type 2 Eagle Analog Output Board for 10-50 mA loops (EAO-02). Unit 2 will use a 50 ohm dropping resistor in the current output loops to develop the output test signal. Unit 1 uses a 20 ohm dropping resistor in the current output loops to develop the output test signal.
3. Transmitter Auxiliary Power Supplies (TAPS) will not be required or provided for Unit 2. Unit 1 uses the TAPS for the 10-50 mA transmitters that require a higher input voltage than the Eagle 21 Analog Input (EAI) Boards can provide. The voltage output of the EAI Boards is enough to drive the Unit 2 4-20 mA transmitters.
4. Eagle Analog Output (EAO) Board impedance switch settings will differ from Unit 1 in Racks 2, 6, 10, and 13. This is due to the 4-20 mA output signal change, changes in Westinghouse Inadequate Core Cooling Monitor (ICCM) design, and Foxboro Digital Control System changes.
5. All Unit 2 Eagle 21 Racks will have a Luxcom OM101-AUI Fiber Optic Converter with SC type fiber connectors. Unit 1 uses a Fiber Com 7498 Fiber Optic Converter with ST type connectors in Racks 2, 6, 10, and 13. This change was necessary due to the Fiber Com Fiber Optic Converters being no longer manufactured and not available for procurement.
6. Unit 2 Fiber Optic Converters will be powered from the associated Serial to Ethernet Controller through the AUI cable. Unit 1 Fiber Optic Converters are powered from the associated Rack 15V power supply bus.
7. Unit 2 Fiber network will be of the direct link type. A Fiber Optic Converter in each Eagle 21 Rack will transmit to a 16 port network switch located in Rack 177. Unit 1 uses a Dual Ring type fiber network. A Fiber Optic Converter in Racks 2, 6, 10, and 13 transmit in a ring fashion to another Fiber Optic Converter in Rack 155. The Unit 2 Luxcom Fiber Optic Converters cannot be configured to operate in a ring fashion, the way the Unit 1 Fiber Com Fiber Optic Converters operate.
8. Upper level configuration drawings for Unit 2 will differ from Unit 1. Unit 2 Cabinet Configuration Drawings will be 1C83609-Series. Unit 1 Cabinet Configuration Drawings are 8250C10-Series. This change is due to the fact that Racks 2, 6, 10, and 13 will be updated in the Unit 2 Eagle 21 installation. Racks 2, 6, 10, and 13 in Unit 1 are of an earlier Eagle 21 design that was upgraded after installation to be functionally equivalent to the latest Eagle 21 design used in the other Unit 1 Protection Set Racks.
9. Input / Output board location drawings for Unit 2 will differ from Unit 1. Unit 2 I/O Board location drawings will be 6D31444-Series. Unit 1 I/O board location drawings are 2007E88-Series. This change is due to the 4-20 mA input/output loop change.
10. Assembly drawings for Unit 2 will differ from Unit 1. Racks 2, 6, 10, and 13 in Unit 1 are of an earlier Eagle 21 design. 2005E44-Series, 2005E40-Series, and 3D21739-Series are the general assembly drawings for the Cabinet, Card Cage, and Status Panel for all Unit 2 Eagle 21 Racks and Racks 1, 3-5, 7-9, 11, 12, and 28 in Unit 1. 1870E97-Series, 1870E94-Series, and 3D20240 are the general assembly drawings for the Cabinet, Card Cage, and Status Panel for Racks 2, 6, 10, and 13 in Unit 1. This change is due to the fact that Racks 2, 6, 10, and 13 will be updated in the Unit 2 Eagle 21 installation.

11. Two Man Machine Interface (MMI) Carts will be included in the Unit 2 Eagle 21 installation. These new MMI Carts are of a new generation and will have an updated touch screen and printer. The Fluke model touch screen and printer provided in the original Unit 1 MMI Carts are no longer being manufactured and are not available. The operation and functionality of the MMI Carts are not changed. MMI Carts provided with the Unit 2 installation are compatible with the Unit 1 Racks, and MMI Carts provided with the Unit 1 installation are compatible with the Unit 2 Racks.
12. In Unit 1, all 'analog' Log point data created by Eagle 21 is routed from Eagle 21's output boards to the Plant Computer. In Unit 2, modifications performed during the installation of the Foxboro IA system have redirected some of the Eagle Log point outputs so that the Log data ~~is~~ sent to the Plant Computer (ICS) via Foxboro IA's network link.

EEFreeman 4-12-10

Unit 2 TVA Engineering Acceptance (Mgr or Designee): **Date:**

Jeremy Paxton 04/07/2010

Prepared By: **Date:**

Streamlined EDCR approved by TVA Oversight NA

SESG TO ROUTE A COPY OF THIS COMPLETED FORM TO TVA TRAINING MANAGER AND TO UNIT 2 LICENSING.

PM WORK ORDER

UNID: WBN-1-PX -099-0500A -E WO NO: 08-813412-000

EQUIP DESCRIPTION: POWER SUPPLY FOR LCP BOARD IN RACK 1-R-5

PART A: SENSITIVE EQUIPMENT

1. Sensitive Equipment/High Risk — 1. Yes ____ No ✓
2. Risk review per SPP-7.1 and critical evolutions as required. — 2. Yes N/A

PART B: OPERATIONS WORK PRE APPROVAL

1. Work Scope is Fully Understood — 1. Yes ✓
2. Technical Specifications and Impact Evaluation Complete — 2. Yes ✓ N/A ____
3. LCO Entry Required, IF Yes, LCO# ____ — 3. Yes ____ N/A ✓
4. The PMT Specified is Adequate to Meet Plant, Tech Specs, and Surveillance Requirements — 4. Yes ____ N/A ✓
5. Does the Work Involved Invalidate a Previously Satisified Tech Spec Surveillance Requirement — 5. Yes ____ No ✓
6. Clearance Required, If Yes, Tagout*Section# ____ — 6. Yes ____ N/A ✓
7. All Clearance Constraints Listed in the Work Package and/or Procedures are identified on the Clearance Sheet — 7. Yes ____ N/A ✓
8. Operations Notification is Required Prior to Starting Work MCR ____ WCC ✓ N/A ____
9. Operations Work Approval [signature] 4/21/9
   SRO/OPS Designee Signature / Date

Comments: N/A

PART C: RESPONSIBLE SECTION PRE APPROVAL

1. Work Scope is Fully Understood — 1. Yes ✓
2. All Required Permits Identified NA — 2. Yes ✓ N/A ____
3. All Req Pre-testing Identified NONE — 3. Yes ✓ N/A ____
4. All Support Identified OPS — 4. Yes ✓ N/A ____
5. Radcon/ALARA RadCon Location N/A ALARA N
   RWP Required N RWP# ____
   (RadCon completes for activities in the RCA or that require an RWP, otherwise Resp Supv N/As)
   Review Complete or N/A N/A
   Radcon / Date
6. Pre-Approval to Begin Work [signature] 9-28-09
   Work Supervisor / Date

PART D: RESPONSIBLE SECTIONS APPROVAL TO BEGIN WORK

1. Clearance in accordance with SPP-10.2, Tagout*Section# N/A — 1. Yes ____ N/A ✓
2. Clearance boundary adequate for work scope. — 2. Yes ____ N/A ✓
3. All Initial Permits Required are Obtained — 3. Yes ✓ N/A ____
4. Material, M&TE, Support and Qualified Personnel Available — 4. Yes ✓
5. All Required Pretesting Completed — 5. Yes ✓ N/A ✓
6. Pre Job/Test Overview/Safety Briefings Completed as Required — 6. Yes ✓ N/A ____
7. Procedures and Drawings Verified for Use — 7. Yes ✓ N/A ____
8. If Part A Sensitive Equipment/High Risk Checked Yes, Department Head or Designee Approval Required N/A
   Department Head or Designee / Date
9. If Part B.8 Operations Notification Checked MCR or WCC, Then OPS Approval Required Prior to Start [signature] 9-28-09
   SRO/OPS Designee / Date
10. Approval to Begin Work [signature] 9-28-09
    Work Supervisor / Date

UNID: WBN-1-PX -099-0500A -E WO NO: 08-813412-000

EQUIP DESCRIPTION: POWER SUPPLY FOR LCP BOARD IN RACK 1-R-5

PART E-1: WORK FIELD COMPLETE RESPONSIBLE SECTION

1. Physical Field Work Complete — 1. Yes ✓ N/A ____
2. Jobsite Cleaned — 2. Yes ✓ N/A ____
3. All Field Documentation Complete — 3. Yes ✓ N/A ____
4. Ready for PMT/RTO — 4. Yes ✓ N/A ____
5. If PMT affects in-service equipment, then OPS review is required. — 5. Yes ✓ N/A ____

[signature] 10/14/09
Operations / Date

A M Buchanan / 10-14-09 / MIG
Work Supervisor Signature Date Section

PART E-2: WORK CLOSURE RESPONSIBLE SECTION

1. All Tech Spec Acceptance Criteria Met for Return To Service (Note 1) — 1. Yes ✓ N/A ____
2. Clearance Released When Ready for PMT/RTO. — 2. Yes ____ N/A ✓
3. PMT Complete — 3. Yes ✓ N/A ____

A M Buchanan / 10-14-09
Signature Date

4. Post Job Review complete as required, (i.e. TVA Form 40899) — 4. Yes ____ N/A ____

PART E-3: DCN DOCUMENTATION CLOSURE SECTION

1. Modification Turnover Package Form SPP-9.3-12 has been completed as required. — 1. Yes ____ N/A N/A
2. Operability Checklist (0-TI-GXX-000-000.0) has been completed as required. (SQN Only) — 2. Yes ____ N/A ____
3. Notify Operations that all Clearances can be released. — 3. Yes ____ N/A ____
4. Ready for Operations Acceptance

N/A / ____ / ____
Signature Date Section

PART F: OPERATIONS ACCEPTANCE FOR WORK CLOSURE

1. All PMTs Completed or Transferred to Document# N/A — 1. Yes ✓ N/A ____
2. All Technical Specification Acceptance Criteria Met for Return to Service (Note 1) — 2. Yes ✓ N/A ____
3. Equipment Ready for Unrestricted Return to Service (Note 1) — 3. Yes ✓ N/A ____
4. Operations Acceptance

[signature] 10/14/09
Operations / Date

PART G: WORK PACKAGE COMPLETE(REVIEW BY RESPONSIBLE SECTION):

Dennett Smith / 10-27-9
Signature / Date

1. Was work performed on equipment within the scope of the 10CFR50.49(EQ) program ? If yes, obtain the signature of the EQ Coordinator. — 1. Yes ____ N/A ✓

N/A
EQ Coordinator / Date

NOTE 1: List any equipment not ready for return to service and/or that does not satisfy tech spec acceptance criteria:

UNID	DESCRIPTION OF PROBLEM	PER NUMBER	WO NUMBER
		N/A	

WO INSTRUCTION REVIEW/APPROVAL SHEET

UNID: WBN-1-PX -099-0500A -E WO NO: 08-813412-000

EQUIP DESCRIPTION: POWER SUPPLY FOR LCP BOARD IN RACK 1-R-5

	SIGNATURE/DATE	REASON
Rev. 0		
PLANNER:	[signature] / 2-6-09	Initial Planning
TECH REVIEWER:	See original Appendix B for initial approvals.	
IQR	See original Appendix B for initial approvals.	
OPS Review*:	See Work Approval Form For Rev 0	
Rev. _____		
PLANNER:	/	
TECH REVIEWER:	/	
IQR	/	
OPS Review*:	/	
Rev. _____		
PLANNER:	/	
TECH REVIEWER:	/	
IQR	/	
OPS Review*:	/	
Rev. _____		
PLANNER:	/	
TECH REVIEWER:	/	
IQR	/	
OPS Review*:	/	
Rev. _____		
PLANNER:	/	
TECH REVIEWER:	/	
IQR	/	
OPS Review*:	/	
Rev. _____		
PLANNER:	/	
TECH REVIEWER:	/	
IQR	/	
OPS Review*:	/	
Rev. _____		
PLANNER:	/	
TECH REVIEWER:	/	
IQR	/	
OPS Review*:	/	

*The OPS Review is required for scope and any PMT revision in Work Order package. N/A otherwise.

PPPP M M
P P MM MM
PPPP M M M
P M M REPETITIVE TASK FORM RESPONSIBLE SECTION: MIG

WO NO: 08-813412-000

UNID: WBN-1-PX -099-0500A -E FILE #: 2 REV#: 10

EQUIP DESC: POWER SUPPLY FOR LCP BOARD IN RACK
1-R-5

SAFETY CLASS:SR EQ:N 1E:Y SECTION XI:N SECT XI R/R:N COMPLIANCE:N **MULTISKILL ACTIVITY:**

QR CODES:Q10 **RELIABILITY CLASSIFICATION** CRITICAL

WORK DESCRIPTION: PROTECTION SET II EAGLE 21 POWER SUPPLY & LCP NVRAM & CLOCK CHIP REPLACEMENT AND ICCM TRAIN B POWER SUPPLY REPLACEMENT. PM 0287W

JOB LOCATION: 708'

CLEARANCE RECOMENDED: (Y/N): N_____

QC HOLDPOINTS: N SCAFFOLD: N INSULATION: N FME LEVEL:2

DRAWINGS
NONE

VENDOR MANUAL REFERENCES:
VTM-W120-2991
VTM-W120-3004

PROCEDURES/REFERENCES:
PMUG 0287W
* Drawings and procedures marked with an '*' are required for work performance.

SCHEDULE EARLY START: 09/06/2009 DUE DATE: 09/06/2009 LATE DATE: 09/06/2009

REFERENCE NO: 600123128 PM INSTRUCTION: 0287W
PM CLASSIFICATION: MANDATORY :N REGULATORY: N CRITICAL: COMMITMENT: Y

CONCURRENT TASK: NONE

SOURCE DOCUMENT: VM, PER WBPER970111

PM FREQUENCY: 54M

OUTAGE CODES: RO1 3R 3C 3C

ENCLOSURE 2

Responses To Licensee Open Items To Be Resolved For SER Approval

Regulatory Commitments

1. The non-proprietary version of Sorrento/GA Software V&V Report Version 1.1 04508005 and withholding affidavit will be submitted by July 14, 2010. This item has been added to the "Licensee Open Items to be Resolved for SER Approval List," as Item 119.

2. Submit EDCR 55385 excerpts by November 15, 2010. This item is tracked by "Licensee Open Items to be Resolved for SER Approval List," Item 118.

3. Submit EDCR 52321 excerpts by October 31, 2010. This item is tracked by "Licensee Open Items to be Resolved for SER Approval List," Item 103.

4. Submit EDCR 52351 excerpts by December 15, 2010. This item is tracked by "Licensee Open Items to be Resolved for SER Approval List," Item 104.

5. The next revision of the Unit 2 Common Q PAMS System Requirements Specification will be provided to NRC no later than August 31, 2010. This item has been added to the "Licensee Open Items to be Resolved for SER Approval List," as Item 122.

6. The report on the final resolution of the Eagle 21 Rack 2 RTD input issue will be provided no later than December 3, 2010. This item has been added to the "Licensee Open Items to be Resolved for SER Approval List," as Item 128.