UNITED STATES
NUCLEAR REGULATORY COMMISSION
ADVISORY COMMITTEE ON REACTOR SAFEGUARDS
WASHINGTON, DC 20555 - 0001

July 12, 2010

MEMORANDUM TO: ACRS Members

FROM: Christopher L. Brown, Senior Staff Engineer /RA/
Reactor Safety Branch A, ACRS

SUBJECT: CERTIFICATION OF THE MINUTES OF THE ACRS ESBWR SUBCOMMITTEE MEETING **OPEN** PORTION, JUNE 22, 2010, ROCKVILLE, MARYLAND

The minutes of the subject meeting were certified on July 09, 2010, as the official record of the proceedings of that meeting. A copy of the certified minutes is attached.

Attachment: As stated

cc w/o Attachment: E. Hackett
C. Santos

UNITED STATES
NUCLEAR REGULATORY COMMISSION
ADVISORY COMMITTEE ON REACTOR SAFEGUARDS
WASHINGTON, DC 20555 - 0001

July 12, 2010

MEMORANDUM TO: Christopher Brown, Senior Staff Engineer
ACRS

FROM: Michael Corradini, Chairman
ESBWR Subcommittee

SUBJECT: CERTIFICATION OF MINUTES OF THE ACRS ESBWR SUBCOMMITTEE MEETING OPEN PORTION, JUNE 22, 2010, ROCKVILLE, MARYLAND

I hereby certify, to the best of my knowledge and belief, that the minutes of the subject meeting on June 22, 2010, are an accurate record of the proceedings for that meeting.

Michael Corradini

_____ 7/ 9/10
Michael Corradini, Date
ESBWR Subcommittee Chairman

Certified by: M. Corradini Issued: July 12, 2010
Certified: July 09 2010

ADVISORY COMMITTEE ON REACTOR SAFEGUARDS
MINUTES OF ACRS ESBWR SUBCOMMITTEE MEETING
JUNE 22, 2010
ROCKVILLE, MARYLAND

INTRODUCTION

The Advisory Committee on Reactor Safeguards (ACRS) Subcommittee on the ESBWR met in room T-2B1 at the Headquarters of the U.S. Nuclear Regulatory Commission (NRC), located at 11545 Rockville Pike, Rockville, Maryland, on June 22, 2010. The Subcommittee was briefed by representatives of NRC's Office of New Reactor Licensing (NRO) on SERs for Chapter 5 "Reactor Coolant System and Connected Systems," Chapter 8 "Electrical Power," Chapter 11 "Radioactive Waste Management," Chapter 17 "Quality Assurance," Chapter 22 "Regulatory Treatment of Non-Safety Systems," and Chapter 19 "Severe Accidents PRA" (Aircraft Impact Assessment) of the ESBWR DCD.

The Subcommittee planned to gather information, analyze relevant issues and facts, and formulate proposed positions and actions, as appropriate, for deliberation by the full Committee of the ACRS at a later date.

The Chairman for this ACRS Subcommittee was Dr. Michael Corradini. Mr. Christopher Brown was the ACRS staff cognizant engineer for this topic and served as the Designated Federal Official for this meeting. Part of meeting was open to public attendance and part of the meeting, involving with the proprietary information discussion, was closed. The Subcommittee received no written comments or requests for time to make oral statements from any members of the public concerning the subject of this meeting. The meeting convened at approximately 8:30am.

The detailed agenda identifying the specific presentation topics comprising this meeting can be found in Attachment 1. Both during and following the scheduled presentations, the speakers responded to specific questions and comments from the ACRS Subcommittee members. The scope of the questions, comments, and answers thereto, and the speaker's responses thereto, have been captured in the verbatim meeting transcript. As a result of Member questions and comments, and speaker responses (answers) thereto – so-called 'Qs and As', a number of follow-up actions were identified for further discussion at subsequent Subcommittee meetings. These follow-up actions will be tracked by the ACRS staff.

ACRS Subcommittee meeting transcripts can be found at the following NRC Internet website location*: http://www.nrc.gov/ reading-rm/doc-collections/acrs/tr/subcommittee/*.

ATTENDEES:

The following list of Individuals (and their affiliations) attending this meeting was compiled using both the sign-in sheets (Attachment 2) and the Subcommittee meeting transcript.

ACRS Members

M. Corradini, Subcommittee Chairman
J. S. Armijo
S. Abdel-Khalik
J. Stetkar
T. Kress, Consultant

ACRS Staff

C. L. Brown, Designated Federal Official
C. Santos
K. D. Weaver, ACRS staff

NRC Staff

A. Cubbage, NRO
D. Misenhimer
M. Caruso
B. Tegeler
D. Andrukat
N. Gilles
J. Dreisbach
M. Tonacci
B. Bavol
Z. Cruz
M. Norato
D. Dube
Amar Pal
R. Jenkins
J. Dehmel
Z. Gran
M. Lombard
J. Preisbach

General Electric-Hitachi (GEH) Staff

Patricia Campbell
Rick Kingston
Jon McLamb
Gary Miller
Jerry Deaver
Jim Enfinger
Peter Diller
Scott Nelson
James Cascone
Rick Wachowiak

SCHEDULED PRESENTATIONS:

The published meeting agenda for this Subcommittee meeting include the following topic:

The ESBWR subcommittee has begun reviewing the final set of topical reports as well as the staff's final SER's for the General Electric-Hitachi (GEH) ESBWR Design Certification Document (DCD).

The committee meeting focused open items resolved by staff review of GEH RAI responses. No significant issues were identified. There were a couple of topics that the subcommittee discussed with GEH and the staff to clarify key points.

OPENING REMARKS AND OBJECTIVES:

Dr. Michael L. Corradini, Chair of the ESBWR Subcommittee, convened the meeting at 8:30 am.

Ms. Amy Cubbage, the NRO Acting Branch Chief and lead PM responsible for the ESBWR DCD review, also made an opening statement.

SUMMARY OF PRESENTATION:

Based on committee discussion, the subcommittee did not identify any substantive concerns that were specific to the ESBWR (a generic concern was raised in the ESBWR context and discussed below). NRC staff has produced appropriate RAIs and the open items associated with these have been adequately closed by the GEH responses for these chapters.

RTNSS Determination: The generic comment focuses on the utilization of importance measures for selection of SSCs to be given special treatment in a design certification (+ DRAP).

When the NRC certifies a plant design with its associated values of CDF, LERF, and LRF, then these risk metrics become part of the licensing basis. The generic issue that raised discussion at our meeting was the potential role of the PRA and the use of these metrics in selection of systems and components to be given special treatment (SSCs identified in RTNSS).

What is generally done is to determine importance measures (RAW and F-V) for the various systems and components in the design and to set limits of these that determine cut-off values for use in the inclusion of any systems or components into the list of SSCs.

Consider the RAW measure. Other advanced plants have been selecting a RAW value of 2 as the cutoff value for which systems/components with assessed RAW values greater than the cutoff value are included as SSCs. The certified ABWR and the current DCD for ESBWR used a cutoff value of 5. The issue is, what is an appropriate RAW (see Note Below) to choose as a cut-off value so as to be generally compliant with the current regulatory philosophy; for example, not allowing too much of a deviation from the assessed certified licensing basis value of CDF. This is a generic issue that has yet to be precisely determined by the staff and is directly affected by risk metrics for advanced LWR plants and their acceptable values.

Chapter 5

The reactor coolant system (RCS) includes those systems and components that contain or transport fluids coming from or going to the reactor core. These systems form a major portion of the reactor coolant pressure boundary (RCPB). To support understanding of shutdown risk,

staff requested information on the minimum vessel level to support RWCU/SDC operation (adequate vessel circulation). Potential for RWCU/SDC flow to bypass the core due to inadequate mixing in the downcomer. GEH indicated that all open Chapter 5 items have been resolved on this issue. Also, Subsection 5.4.6 has been modified as a result of the chapter 6 hydrogen detonation issue raised by the Committee. GEH also indicated that the design of components exposed to reactor water is more robust. In response to operating plant experience, improved fabrication processes and methods are being implemented. It was indicated that more discussion on hydrogen would occur during the July meeting with respect to long-term cooling.

Chapter 8

The electric power system is the source of power for station auxiliaries during normal operation and for the reactor protection system and engineered safety features during abnormal and accident conditions. Staff indicated that GEH has provided sufficient information to demonstrate that the offsite power supply system, onsite ac power supply systems, and onsite dc power supply systems are capable of providing power to support the plant's safe operation satisfying the requirements of GDC 17 and 18. Additionally, the staff concludes that the ESBWR design is in compliance with 10 CFR 50.63 as they relate to the capability to achieve and maintain hot shutdown in the event of an SBO. GEH stated that all open items related to the 250 VDC electrical systems are closed and the system meets the regulatory requirements and associated acceptance criteria.

Chapter 11

The radioactive waste management systems (RWMS) are designed to control, collect, handle, process, store, and dispose of liquid, gaseous, and solid wastes that may contain radioactive materials. Staff discussed SER Open Item in 11.2, related to Liquid Waste Management Systems and SER Open Item in 11.4, related to Solid Waste Management Systems. With respect to the staff's concerns, GEH stated that collection and sample tanks and pumps are located on the lower elevation of the Radwaste Building (as these components will be required regardless of the type of processing). Further, processing equipment is modular and is located on the grade elevation of the Radwaste Building. Area is served with the Radwaste Building crane to allow for reconfiguration or replacement.

Chapter 17

I Quality assurance (QA) program is for the design, fabrication, construction, testing, and operation of the nuclear plant. In addition, this chapter addresses the reliability assurance program (RAP) in the design phase and the Maintenance Rule program. n summary from the SER, GEH stated that it will identify a comprehensive list of SSCs within the scope of Design Reliability Assurance Program (D-RAP) at a later phase of development of the D-RAP. GEH is requested to provide a comprehensive list of SSCs within the scope of D-RAP to the NRC staff so that the NRC staff can complete its review of the ESBWR D-RAP. GEH stated that open Item 17.4-1 from the 2007 SER has been addressed. Staff indicated that Staff concludes that the methodology used to identify the RAP SSCs is adequate and meets the guidance in Item E of SECY-95-132 and SRP Section 17.4 Staff concludes that the list of RAP SSCs is adequate and meets the guidance in Item E of SECY-95-132 and SRP Section 17.4 All RAIs associated with NEDO-33411 and SRP Section 17.4 are resolved.

Chapter 22

The ESBWR is designed to rely upon passive systems for safety purposes. Consequently, except for some instrumentation and control systems, active systems (systems that require AC power to operate) are designated as non-safety. Several open items were discussed. Items were related to post-accident monitoring equipment designed using IBC-2003 seismic criteria, missile protection for non-seismic structures housing RTNSS equipment, and details of RTNSS equipment, and surveillance requirements. GEH stated that they have addressed all open items related to the regulatory treatment of non-safety systems.

SUBCOMMITTEE FOLLOW-UP ACTIONS/SIGNIFICANT ISSUES/COMMENTS

See attached.

BACKGROUND MATERIALS PROVIDED TO THE SUBCOMMITTEE PRIOR TO THIS MEETING:

1. NEDO-33201, Revision 4, "ESBWR Design Certification Probabilistic Risk Assessment," September 2009, (ADAMS Accession No. ML092030211).

Attachments (3):
1. Meeting Agenda
2. Sign-In Sheets
3. Follow-up items
4. Presentation Materials
5. Consultant Report
****

Advisory Committee on Reactor Safeguards
Meeting of the Subcommittee on ESBWR
Rockville, MD

Tuesday, June 22, 2010

Cognizant Staff Engineer: Christopher L. Brown (301)-415-7111, Christopher.Brown@nrc.gov

Item	Topic	Presenter(s)	Time
1	Opening Remarks and Objectives	**Dr. Michael L. Corradini, ACRS**	8:30 – 8:35 a.m.
2	Staff Opening Remarks	**Amy Cubbage, NRO**	8:35 – 8:40 a.m.
3	**Chapter 5 "Reactor Coolant System and Connected Systems"**	a. GEH – Jerry Deaver, Tim Enfinger (Phone support-Joel Melito) b. NRO – Zahira Cruz (PM), John Wu	8:40 – 9:45 a. m.
4	**Chapter 8 "Electrical Power"**	a. GEH – Rick Wachowiak, (Phone support-Kevin Nunes) b. NRO – Dennis Galvin (PM), Amar Pal, Rolando Jenkins (BC)	9:45 – 10:45 a.m.
	Break		10:45 - 11:00 a. m.
5	**Chapter 11 "Radioactive Waste Management"**	a. GEH – Tim Enfinger, (Phone support-Jim Cascone) b. NRO – David Misenhimer (PM), George Cicotte	11:00 – 12:00 p.m.
	Lunch		12:00 – 1:00 p.m.
6	**Chapter 17 "Quality Assurance"**	a. GEH – Gary Miller, Lee Dougherty b. NRO – David Misenhimer (PM), Todd Hilsmeier	1:00 – 2:00 p.m.
7	**Chapter 22 "Regulatory Treatment of Non-Safety Systems"**	a. GEH –Rick Wachowiak, Gary Miller, Lee Dougherty b. NRO – David Misenhimer (PM), Mark Caruso, Edward Harbuck	2:00 – 3:00 p.m.
	Break		3:00 – 3:15 p.m.
8	**Chapter 19 "Severe Accidents PRA" (Aircraft Impact Assessment) *** **CLOSED**	a. GEH – Gary Miller, Rick Wachowiak, Lee Dougherty b. NRO – David Misenhimer (PM), Mark Caruso, Bret Tegeler, Dennis Andrukat	3:15 – 5:15 p.m.
9	Committee Discussion	**Dr. Corradini, ACRS**	5:15 p.m.
	Adjourn		5:30 p.m.

*** Portion of meeting discussion may be CLOSED due to the discussion of OUO - Security Related Material**

ADVISORY COMMITTEE ON REACTOR SAFEGUARDS

SUBCOMMITTEE MEETING ON ESBWR

June 22, 2010
Date

PLEASE PRINT

	NAME	AFFILIATION
1	Jon McLamb	GEH
2	Lee Dougherty	GEH
3	Rick Kingston	GEH
4	Erin Shuba	GEH
5	Weston Cundiff	GEH
6	Gary Miller	GEH
7	JERRY DEAVER	GEH
8	Jim Enfinger	GEH
9	JAMES CASCONE	GEH
10	Rick WACHOWIAK	GEH
11	Patricia Campbell	GEH
12	~~GEORGE THOMAS~~	
13	~~DAVID MILLENHIMER~~	
14		
15		
16		
17		
18		
19		
20		
21		
22		
23		
24		
25		
26		
27		
28		

ADVISORY COMMITTEE ON REACTOR SAFEGUARDS

SUBCOMMITTEE MEETING ON ESBWR

June 22, 2010
Date

NRC STAFF SIGN IN FOR ACRS MEETING

PLEASE PRINT

	NAME	NRC ORGANIZATION
1	Zahira Cruz	NRC
2	Michael Norato	NRC/NRO/DE
3	Andrew Proffitt	NRR
4	Thea Tadlock	NRR
5	Courtney St. Peters	NRO
6	Chang-Yang Li	NRC/NRO/DSRA
7	Cheng Ih (John) Wu	NRO/DE/EMB1
8	Marie Pohida	NRO/DSRA/SPRA
9	GEORGE THOMAS	NRO/DSRA/SRSB
10	DON DUBE	NRO/DSRA
11	George Georgiev	NRO/DE/CIB2
12	Amy Cubbage	NRO/DNRL/NGE
13	DAVID MISENHIMER	NRO/DNRL/NGE
14	Dennis Galvin	NRO/DNRL/NGE
15	Ronaldo Jenkins	NRO/DE/EEB
16	AMAR PAL	NRO/DE/EEB
17	JC Dehmel	NRO/DCIP/CHPB
18	Steve Williams	NRO/DCIP/CHPB
19	Edward Roach	NRO/DCIP/CHPB
20	Zach Gran	NRO/DCIP/CHPB
21	Rich McIntyre	NRO/DCIP/CQVB
22	Mark Lombard	NRO/DSRA
23	JASON PRUSBACH	NRO/DSRA
24		
25		
26		
27		
28		

ESBWR Subcommittee Action Items

No.	MTG	ACTION ITEM	CONTEXT	AREA	LEAD(s)	COMMENTS / ACTION / DISPOSITION
June 22, 2010 Subcommittee Meeting						
1	JUNE10	RES Technical Evaluation RWCU/SDC Operation during Mode 5 Computational Fluid Dynamics Predictions	Chapter 5 and 19	DCD	Boyd	Chris Boyd provided the User Need and the final RES technical evaluation report to the ACRS. The report has been distributed to the Subcommittee. This item is closed.
2	JUNE10	Renaldo Jenkins and Amar Pal committed to sending the ACRS the generic letters that focused on station blackout. Re: Stetkar's concerns.	Chapter 8	DCD	Galvin	
3	JUNE10	NRO committed to send ACRS Revision 5 of PRA	Chapter 19	DCD	Misenhimer	
4	JUNE10	Addition RAIs were sent to GEH relating to hydrogen accumulation. Staff committed to send ACRS the RAIs to support July meeting.	Chapter	DCD	McKirgan	The RAIs have been forwarded to the Committee. This item is closed.
5	JUNE10	Staff committed to forward ACRS steam Dryer Topical for informational purposes only.	Chapter	Topical	Cubbage	
6	JUNE10	NRO committed to provide the Committee with a list of significant open items (which are now closed) to be discussed, in each chapter, order for the committee to provide feedback to the staff on which to cover (or not cover).		DCD	Cubbage	
7	JUNE10	.				
8	JUNE10					

ESBWR Subcommittee Action Items

9	JUNE10	.

GE Hitachi Nuclear Energy

ESBWR Chapter 5: Reactor Coolant System and Connected Systems

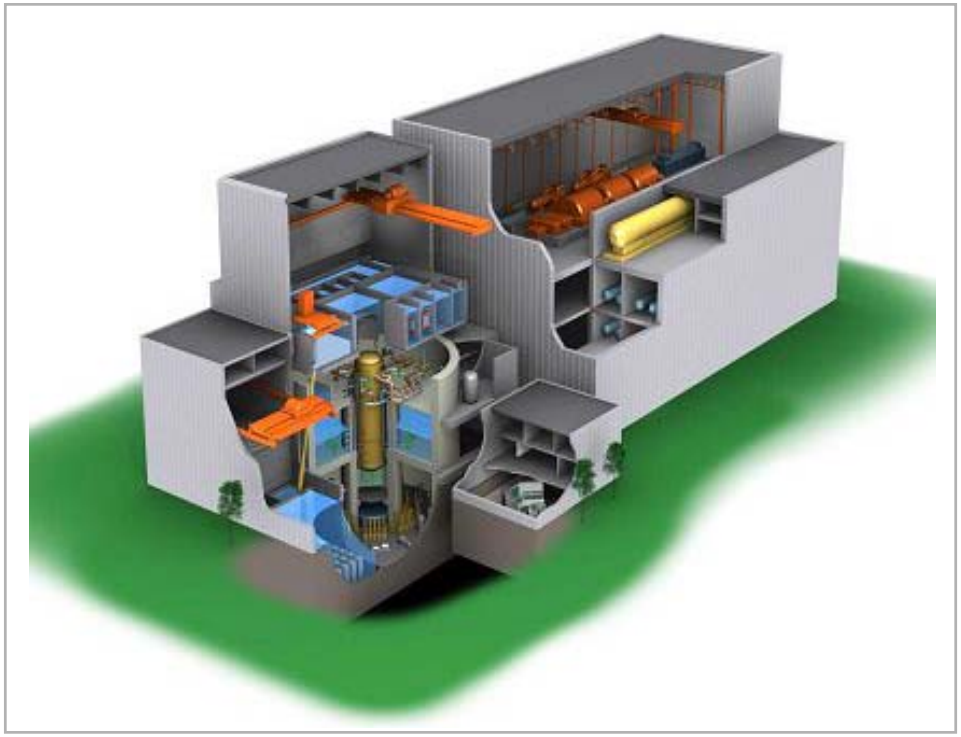

Advisory Committee on Reactor Safeguards

Tim Enfinger

Jerry Deaver

June 22, 2010

HITACHI

Introduction

- **Open items from the 2007 SER with Open Items**
  - 26 open items identified in the SER; all resolved
  - Most significant is Open Item 5.4-59

- **Open items of interest from 2007 ACRS chapter 5 meetings**
  - RAI 5.2-70 IASCC effects on reactor internals
  - RAI 5.2-71 & -71 S01; Welding & Grinding on RCPB components

- **Other item of interest**
  - ASME Code Case N-782; applicable ASME Code Edition

HITACHI

Open Issue 5.4-59

Summary from SER:

Provide additional information regarding operation of the reactor water cleanup/shutdown cooling (RWCU/SDC) system during Modes 5 (cold shutdown) and 6 (refueling).

Feedwater Spargers

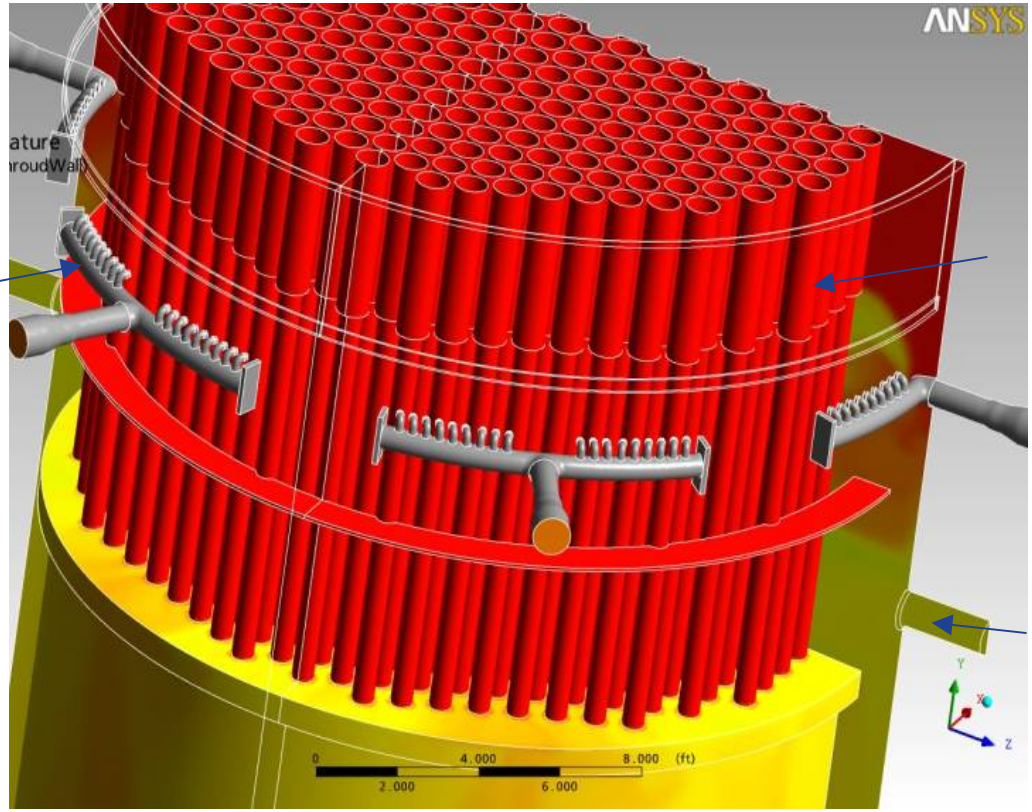

Steam Separators

RWCU Suction Nozzle

HITACHI

RAI 5.4-59 Decay Heat Removal (DHR)

Response:

a) Clarified vertical separation of feedwater (return flow) and mid-vessel (supply flow) nozzles and SDC flow path

b) Clarified DCD discussion of vessel level for SDC function
   - Addresses ESBWR design relative to SIL-357 recommendations
   - Discusses transition between Modes, thermal stratification, and design to limit thermal cyclic fatigue.

c) Results of RWCU/SDC DHR performance analysis provided
   - Described analytical model for Modes 4 & 5 DHR evaluation
   - Addressed sensitivity of mixing function value to SDC flow rate and cool down time

d) Clarified information from the shutdown PRA

HITACHI

RAI 5.4-59 DHR (continued)

Conclusion

- Changes resulting from this RAI were incorporated in DCD Revision 6, no additional changes afterward
- Analytically shown to be tolerant of incomplete return flow mixing with respect to cool down time
- Design strategy mitigates cyclic thermal fatigue
- The design permits passive response to mitigate a loss of shutdown cooling

HITACHI

RAI 5.2-70

Summary of RAI:

1. Explain/expand DCD statement to include your plan of mitigating the IGSCC and IASCC of the core shroud
2. Revise the DCD and discuss other mitigating device(s) that you will be using in addressing the IGSCC and IASCC of the core shroud

Response:

DCD subsection 5.2.3.2.2 was modified to acknowledge that IASCC becomes a concern when fluence reaches $5x10^{20}$ n/cm^2, and that material hardening and segregation occur. Improvements in water chemistry are beneficial to limit susceptibility to both IGSCC and IASCC.

Prevention measures include material selection, fabrication and process controls, water chemistry controls, and locating welds away from high fluence regions. For the shroud, solution annealing following welding will reduce the effects of cold work and weld residual stresses.

Conclusion:

Effective prevention measures have been identified in the DCD that limit the susceptibility to IGSCC and IASCC to components exposed to Rx water

RAI 5.2-71 & -71 S01

Summary of RAI:

The staff requested that GEH make the following DCD modifications:

1. Describe controls placed on welding operations that minimize the potential for welding defects that would require grinding
2. For those situations where grinding is unavoidable, define methods to be taken to minimize the effects of cold work

Response:

DCD subsections 4.5.2.2 & 5.2.3.4.2 were revised to implement welding controls (thorough cleaning of weld preps, use of protective gas back purge, prohibiting SMAW on root pass, visual exam each weld pass)

DCD subsections 4.5.2.2 and 5.2.3.4.2 were revised to identify controls to limit cold work (limits on hardness, bend radii, and surface finish on ground surfaces); and identify methods to mitigate surface cold work (local or full re-solution annealing, flappering, controlled machining, mechanical polishing or electroplating)

Conclusion:

The DCD now provides controls that will minimize weld defects and contains processes to minimize the effects of grinding when it is necessary

HITACHI

ASME Code Case N-782

- Inquiry: What Code Editions, Addenda, and Cases may be used as an alternative to NCA-1140(a)(2)(a) and NCA-1140 (a)(2)(b)?

{NCA-1140(a)(2) In no case shall the code Edition and Addenda date be established in the Design Spec be earlier Than:

(a) 3 years prior to the date that the Nuclear Power Plant construction permit application is docketed; or

(b) the latest edition and addenda endorsed by the regulatory authority having jurisdiction at the plant site at the time the construction permit application is docketed}

- Reply: It is the opinion of the Committee that as an alternative to NCA-1140(a)(2)(a) and NCA-1140 (a)(2)(b), the following requirements may be used:

(a) **The Edition and Addenda endorsed for a design certified or licensed by the regulatory authority**

(b) This Case number shall be recorded on the documentation for the item

HITACHI

ASME Code Case N-782 (continued)

- This code case has been incorporated into the ESBWR DCD rev 7 (Table 5.2-1)
- The ASME Code Edition and Addenda will remain the same for all ESBWR plants licensed under the US NRC certification program
- Standardizes the equipment documentation and simplifies closure of ASME related ITAACs
- All ASME code requirements for all applicable equipment will be met

HITACHI

Summary

- All open Chapter 5 items have been resolved
  - Subsection 5.4.6 has been modified as a result of the chapter 6 hydrogen detonation issue
- The design of components exposed to reactor water are now more robust
- In response to operating plant experience, improved fabrication processes and methods are being implemented

HITACHI

U.S.NRC

UNITED STATES NUCLEAR REGULATORY COMMISSION

Protecting People and the Environment

Presentation to the ACRS Subcommittee

ESBWR Design Certification Review

Chapter 5 - “Reactor Coolant System and Connected Systems”

Zahira Cruz – Project Manager

Marie Pohida – RAI 5.4-59 Resolution

John Wu – ASME Code Case

June 22, 2010

ACRS Subcommittee Presentation
ESBWR Design Certification Review
Chapter 5

Open Item 5.4-59

- To support understanding of shutdown risk, staff requested information on:
  - Minimum vessel level to support RWCU/SDC operation (adequate vessel circulation).
  - Potential for RWCU/SDC flow to bypass the core due to inadequate mixing in the downcomer.

ACRS Subcommittee Presentation
ESBWR Design Certification Review
Chapter 5

Open Item 5.4-59 (continued)

- In response to staff RAIs, GEH updated DCD to include:
  - Minimum vessel level to support shutdown cooling core circulation.
  - Discussion on prevention of thermal stratification by maintaining vessel level sufficiently above minimum level.
  - Discussion of mixing within the vessel.

ACRS Subcommittee Presentation
ESBWR Design Certification Review
Chapter 5

Open Item 5.4-59 (continued)

- To confirm DCD updates and GEH's simplified calculation for core temperature response, RES performed 3D CFD calculations on RWCU/SDC flows
  - Geometry extracted from GEH supplied model.
  - Model includes:
    - downcomer region
    - space around separators
    - inlet feedwater spargers
    - lower plenum in detail
  - Downflow from separator spillover interacts with horizontal jets from feed water sparger.
    - spargers physically spread the incoming flow
    - flow interaction with separator geometry and spillover flows results in high turbulence generation and mixing
- RAI 5.4-59 is closed

ACRS Subcommittee Presentation
ESBWR Design Certification Review
Chapter 5
Section 5.2.1 – Codes and Applicable Code Cases

Regulations and Regulatory Guidance

- General Design Criteria 1
- 10 CFR 50.55a
- Regulatory Guides 1.84, 1.147 and 1.192

Technical Review Summary

- GEH requested to add ASME Code Case N-782 to DCD Tier 2 Table 5.1-2, Applicable Code Cases, in order for ESBWR to be in compliance with requirements of ASME NCA-1140(a)(2).
- Code Case N-782 is not listed in RG 1.84 for NRC acceptance. The use of this Code Case requires the staff approval.
- The request is approved by the staff based on GEH's provided information in accordance with 10 CFR 50.55a(3)(i) and (3)(ii).

Open Items

- None

ACRS Subcommittee Presentation
ESBWR Design Certification Review
Chapter 5

Discussion/Committee Questions

ACRS Subcommittee Presentation
ESBWR Design Certification Review
Chapter 5

Backup Slide

ACRS Subcommittee Presentation
ESBWR Design Certification Review
Chapter 5

Open Item 5.4-59

- Mass flow from separator spillover (red) is over 10X the mass flow from the spargers (blue) at 8 hrs.
  - The spargers physically spread the incoming flow around the periphery of the vessel.
  - The incoming flow (blue) is swept away by the significantly larger natural circulation flows coming out of the separators (red).
  - Mixing is nearly 100% and bypass is not predicted.

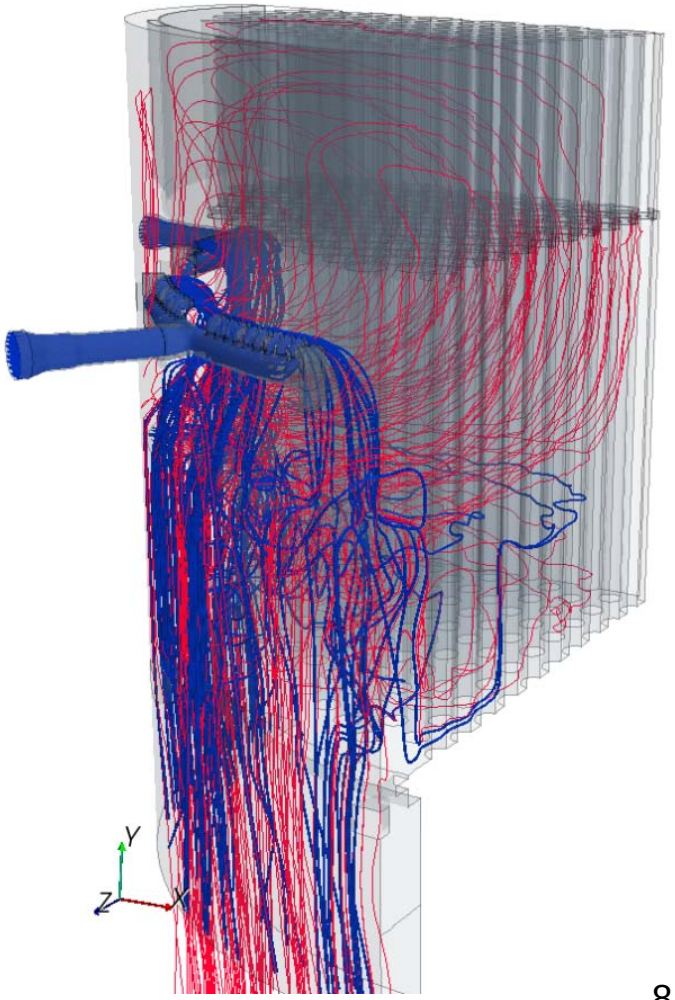

GE Hitachi Nuclear Energy

ESBWR Chapter 8: Electric Power

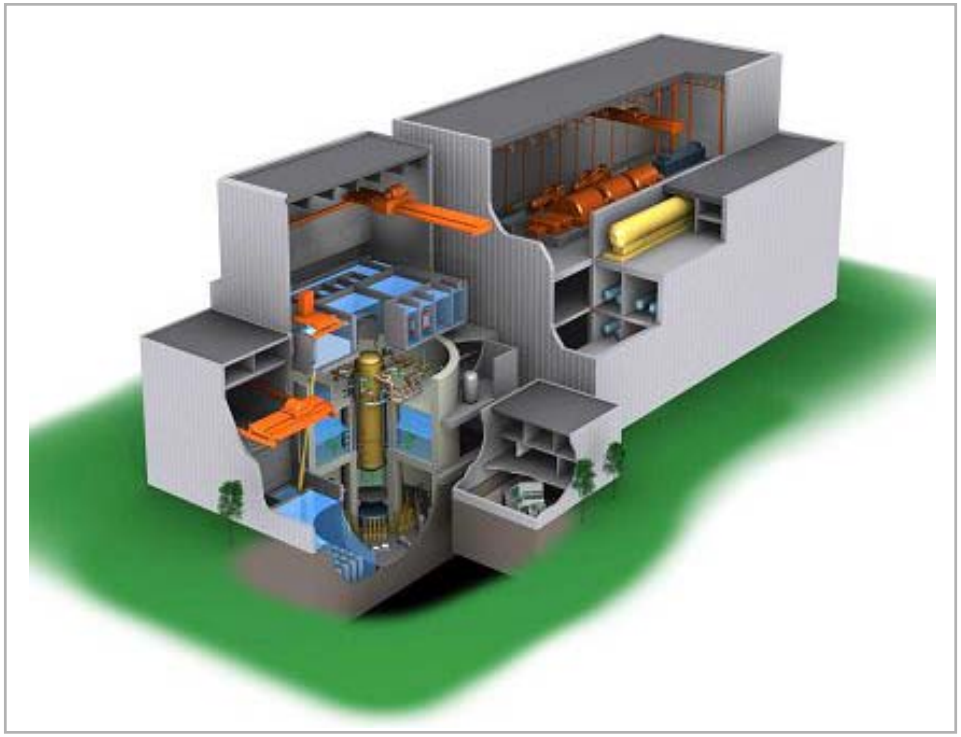

Advisory Committee on Reactor Safeguards

Rick Wachowiak

June 22, 2010

HITACHI

Introduction

Single open item from SER with Open Items

- Provide battery loading profile for safety-related 250 VDC batteries for 72-hour operation

Other configuration changes included in Advanced Final SER

- Battery type
- Uninterruptible Power Supply (UPS) configuration
- Ancillary Diesel Generators

HITACHI

Open Item 8.3-52 S03

Summary from the SER:
GEH did not provide the loading profile to demonstrate that the safety-related 250 VDC batteries are sized to meet the design requirement of their connected load for the corresponding time period of 72 hours without the charger's support. Therefore, the staff identified this issue as open for the safety-related 250 VDC system.

Response:
GEH generated a loading profile which was summarized in Table 8.3-3 of the DCD. This table documented the estimated nominal safety-related loads for the 250 VDC Safety-Related Batteries. In addition an ITAAC (Table 2.13.3-3 #3) was added to test the as-built batteries to simulate the analyzed battery design duty cycle.

HITACHI

Open Item 8.3-52 S03

Summary from RAI 8.3-52 S04:

The staff requested additional information related to the GEH response to S03 including battery capacity, charger and rectifier specifications, inverter specifications related to total harmonic distortion and regulating transformer and UPS requirements.

Response:

Table 8.3-4, *Safety-Related DC and UPS Nominal Component Data*, was added to DCD Rev 6 to address these concerns.

Conclusion:

The battery capacity, charger sizing, and inverter sizing are consistent with the DC load profile.

HITACHI

250 VDC Safety-Related Battery Nominal Load Requirements

	DC Power (Watts)							
	Normal	DBA 0-1 min	1-5 min	5-7 min	7-15 min	15-17 min	17-60 min	1-72 hours
Division 1	24697	26259	19618	22118	20501	20618	20501	20501
Division 2	24697	26259	19618	22118	20501	20618	20501	20501
Division 3	22040	23604	23993	26180	24563	24680	24563	24563
Division 4	22040	23604	23993	25805	24188	24305	24188	24188

Calculation Performed To IEEE 485 - 1997

HITACHI

ESBWR Safety Related Battery Type

Changed VRLA to VLA Batteries:

- In 2008, IEEE 535 committee had no plans to incorporate VRLA
- GEH conducted several month exploration of the two technologies
  - Examined four different suppliers with both offerings
  - Evaluation matrix created to aid in selection
  - VLA ranked highest
- Customers expressed concern with VRLA batteries
  - High comfort level with VLA and no experience with VRLA
  - Concerned about lack of regulatory guidance
- DCD rev 6 switched from VRLA to VLA batteries
- Battery qualification is described in NEDE-33516P

HITACHI

ESBWR Uninterruptible Power Supply (UPS)

Safety-related loads are supplied by the UPS

- Not directly from the battery

Each UPS consists of a rectifier and an inverter

- Two in each division
- Each UPS normally carries 50% of the load

Normal power to UPS is from Isolation Power Center bus

Standby power is 250 volt dc from batteries

No safety-related UPS bypass transformers to preclude the potential for disruptive voltages and frequencies to reach safety-related loads

HITACHI

250 VDC / UPS Configuration

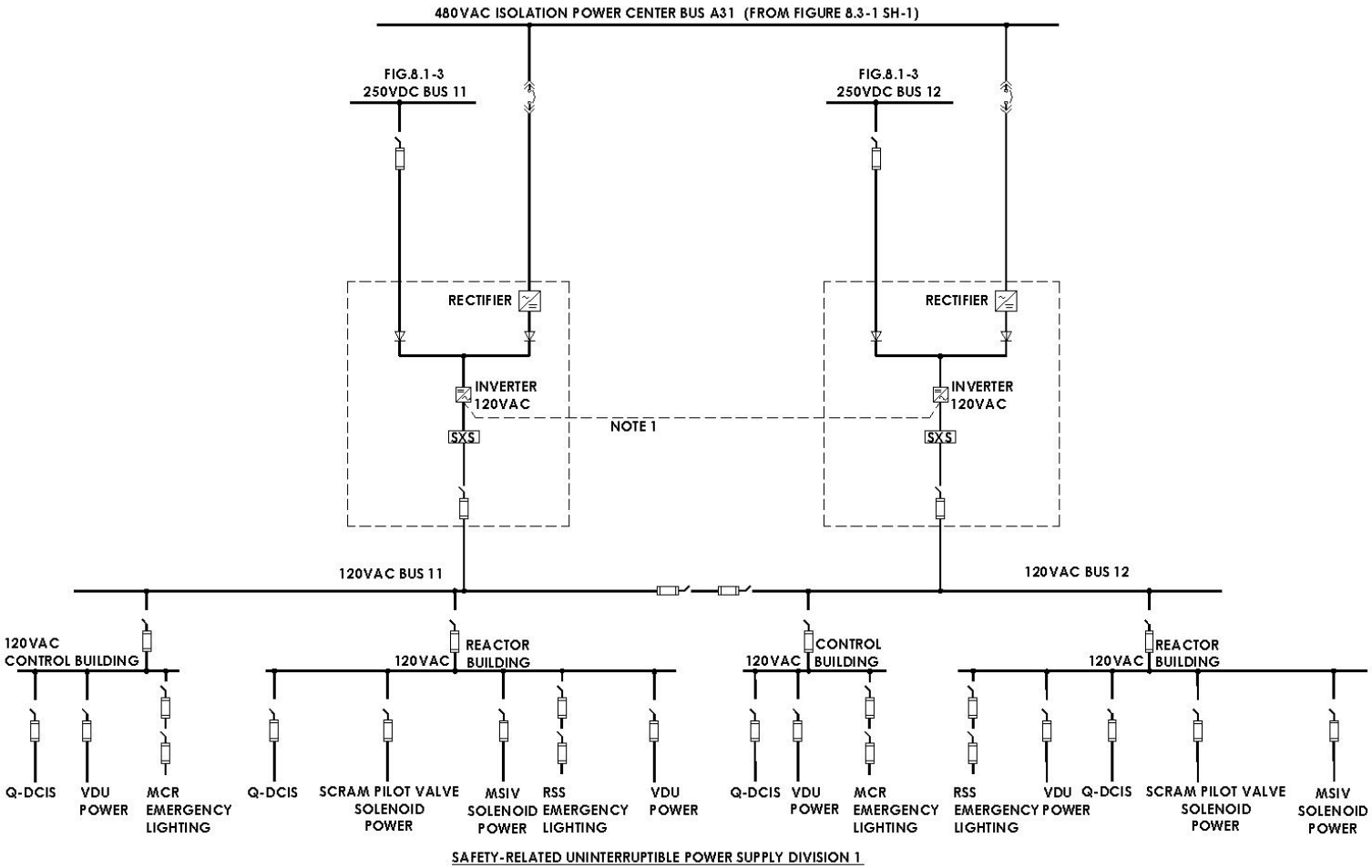

HITACHI

Ancillary Diesel Generators (ADG)

Redundant ADGs provide 480 volt ac power post-72-hours

ADGs and support SSCs are seismic Category II and housed in a seismic Category II structure

Not credited in any design basis analysis for first 72 hours following the loss of all other ac power sources

Automatically start on low voltage or low room temperature

HITACHI

ADG Bus Configuration

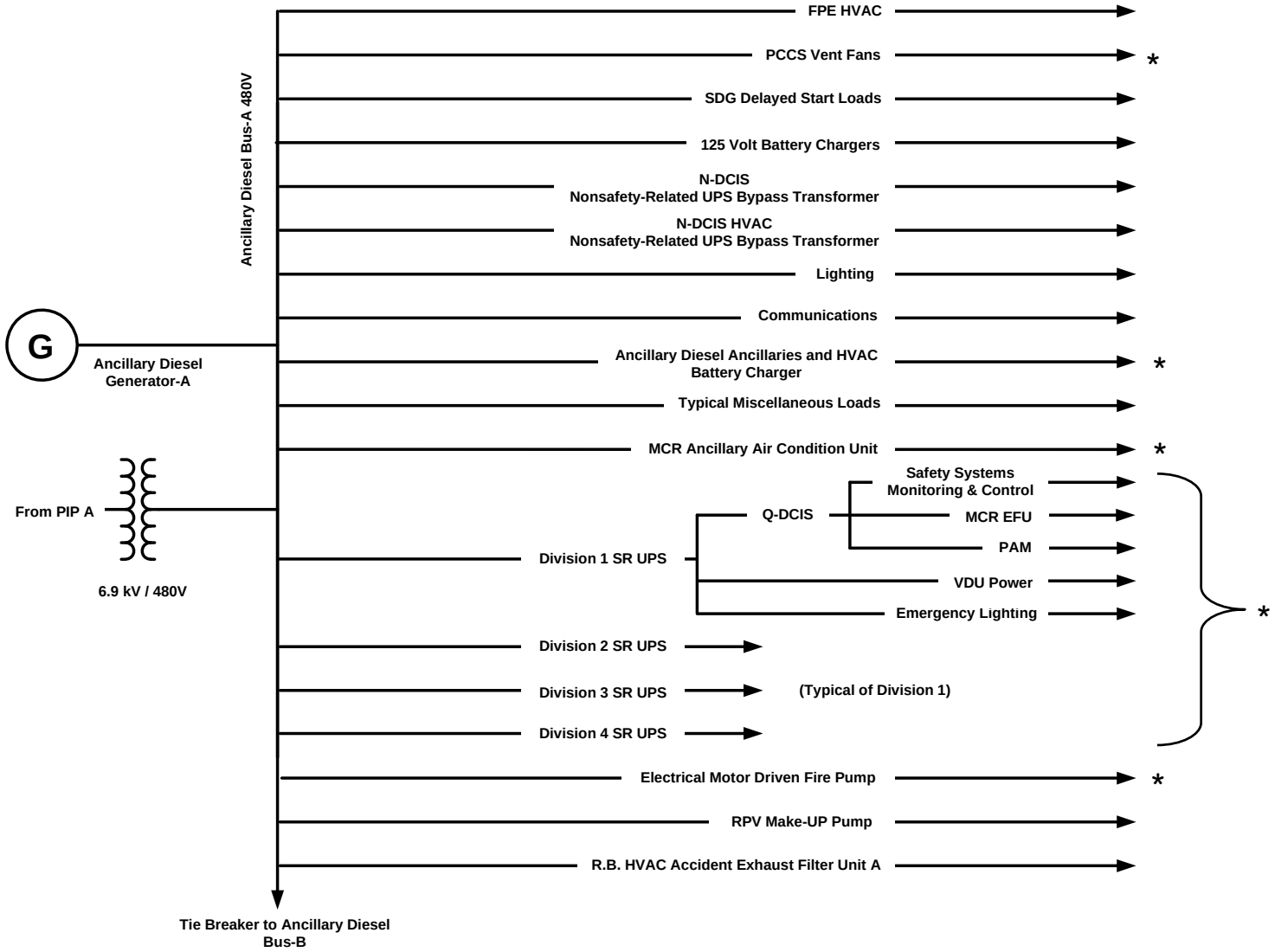

HITACHI

* Required for RTNSS B

Summary

All open items related to the 250 VDC electrical system are closed and the system meets the regulatory requirements and associated acceptance criteria

HITACHI

United States Nuclear Regulatory Commission

Protecting People and the Environment

Presentation to the ACRS ESBWR Subcommittee

Advanced Final SER for Chapter 8 Electrical Power

Amar Pal – Technical Reviewer
Dennis Galvin – Project Manager

June 22, 2010

ESBWR-CHAPTER 8

- SER with Open Items briefed on October 3, 2007 based on DCD Revision 3
- Discussion
  - Open Item since last meeting with ACRS
    - Load Profile and Battery Sizing
  - Batteries
  - Uninterruptible Power Supply (UPS)
  - Ancillary Diesel Generators
  - Conclusion

ESBWR-CHAPTER 8

- One open item in the SER with Open items.
  - RAI 8.3-52 involved battery sizing
  - Battery Load Profile is provided in DCD
  - GEH provided a summary of the battery sizing calculation.
  - IEEE 485 is used to size the battery (aging factor, temperature correction factor based on lowest electrolyte temperature, margin, battery state of charge factor).
  - RAI 8.3-52 was resolved

ESBWR-CHAPTER 8

- Batteries
  - Batteries were changed from valve regulated lead acid (VRLA) to vented lead acid (VLA) in DCD Revision 6.
  - VLA batteries are used in existing nuclear power plants.
  - Batteries are adequately sized to mitigate accident without charger support for 72 hours.
  - Battery qualification will be demonstrated by type testing per licensing topical report NEDE-33516P.

ESBWR-CHAPTER 8

- Uninterruptible Power Supply (UPS)
  - In the ESBWR, all safety-related load are provided by the UPS
  - UPS consists of a rectifier and an inverter
  - Each division has two UPSs and each UPS normally carry 50% of the load
  - Normal power to UPS is 480 volt from isolation power center (IPC) bus and standby power is 250 volt dc from batteries.

ESBWR –Chapter 8

- Staff was concerned about the effect of voltage transients during islanding mode of operation (RAI 8.2-14).
  - The design includes trip coordination (magnitude and time delay) among input rectifiers, battery chargers, and inverters, so that rectifiers and battery chargers trip first on excessive high voltage so that inverters continue to supply safety-related loads using stored energy from batteries.
  - An ITAAC is provided to verify the trip coordination of safety-related battery chargers and UPS input rectifiers with inverters.
  - ESBWR design has been changed to eliminate the safety-related UPS bypass transformers because of potential for disruptive voltages and frequencies to reach safety-related loads.
  - RAI 8.2-14 was resolved.

ESBWR-CHAPTER 8

- Ancillary Diesel Generators (ADG)
  - ADGs added in DCD Revision 4
  - Two ADGs provide 480 volt ac power to meet post-72-hour power requirements.
  - ADGs and auxiliaries, controls, electrical distribution buses, and fuel tanks are seismic Category II and housed in a seismic Category II structure.
  - ADGs are not required to support safety-related loads for the first 72 hours following the loss of all other ac power sources.
  - An undervoltage condition on ancillary diesel buses or a low ancillary diesel room temperature will start ADG.

ESBWR –Chapter 8

- Ancillary Diesel Generators (Cont'd)
  - ADGs are part of RTNSS program.
  - The availability controls manual requires that two ADGs with fuel tanks, fuel oil transfer pumps and ancillary buses be available during all modes of plant operation.
  - ADGs are started and operated at rated load for one hour every 92 days.
  - ADGs are load tested at rated load for 24 hours every refueling outage.

ESBWR-CHAPTER 8

- Conclusion
  - The applicant has provided sufficient information to demonstrate that the offsite power supply system, onsite ac power supply systems, and onsite dc power supply systems are capable of providing power to support the plant's safe operation satisfying the requirements of GDC 17 and 18 . Additionally, the staff concludes that the ESBWR design is in compliance with 10 CFR 50.63 as they relate to the capability to achieve and maintain hot shutdown in the event of an SBO.

GE Hitachi Nuclear Energy

ESBWR Chapter 11: Radioactive Waste Management

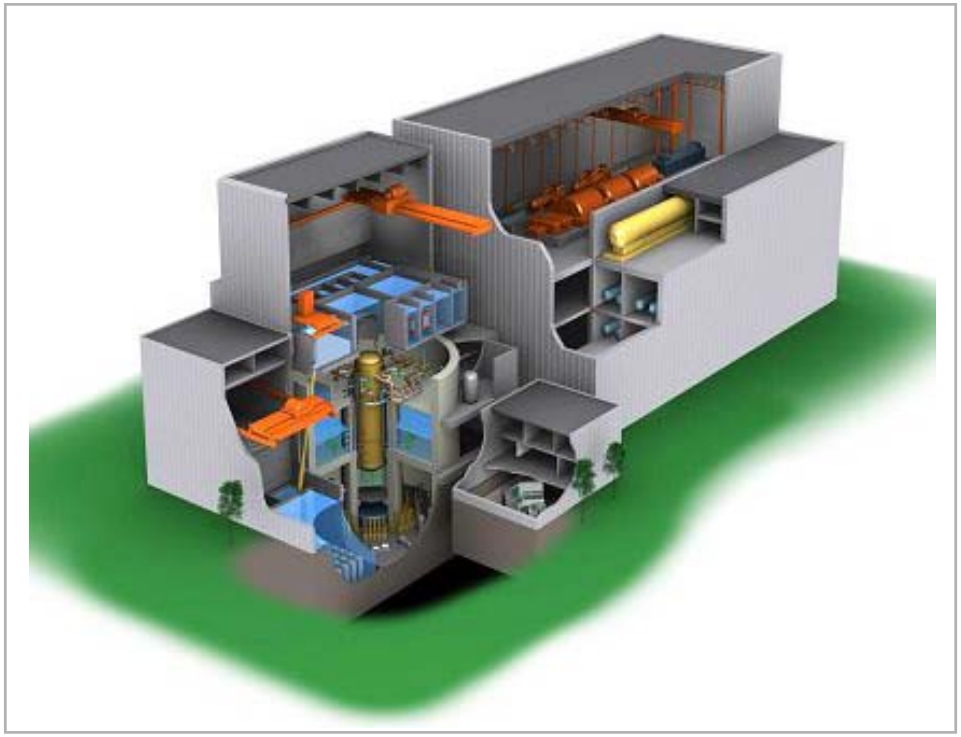

Advisory Committee on Reactor Safeguards

Tim Enfinger

James Cascone

June 22, 2010

HITACHI

Brief Timeline of DCD Chapter 11

- Revision 3 (Feb 2007) – No P&IDs and Systems Considered Mobile/Conceptual
- Revision 4 (Sept 2007) – P&IDs included, Systems still considered Mobile/Conceptual
- Revision 5 (May 2008) – P&IDs remain, Systems considered permanent and final

HITACHI

Open items from the 2007 SER

- Three open items identified in the 2007 SER with Open Items; all resolved.
- Most significant Open Items were RAIs 11.2-16 & 11.4-18. (Same issue for LWMS & SWMS respectively)
- Third Open Item was RAI 11.4-15. It required including ITAACs for the SWMS into Tier 1.

HITACHI

DCD Subsections and Figures Affected by RAIs 11.2-16 & 11.4-18

- As a result of RAI 11.2-16, DCD Subsections 11.2.2.2 and 11.2.2.3 and Figures 11.2-1a, 1b, 3 and 4 were revised accordingly.
- As a result of RAI 11.4-18, DCD Subsections 11.4.2.2 and 11.4.2.3 and Figures 11.4-2 and 11.4-3 were revised accordingly.

HITACHI

Typical P&ID (Figure 11.2-1a)

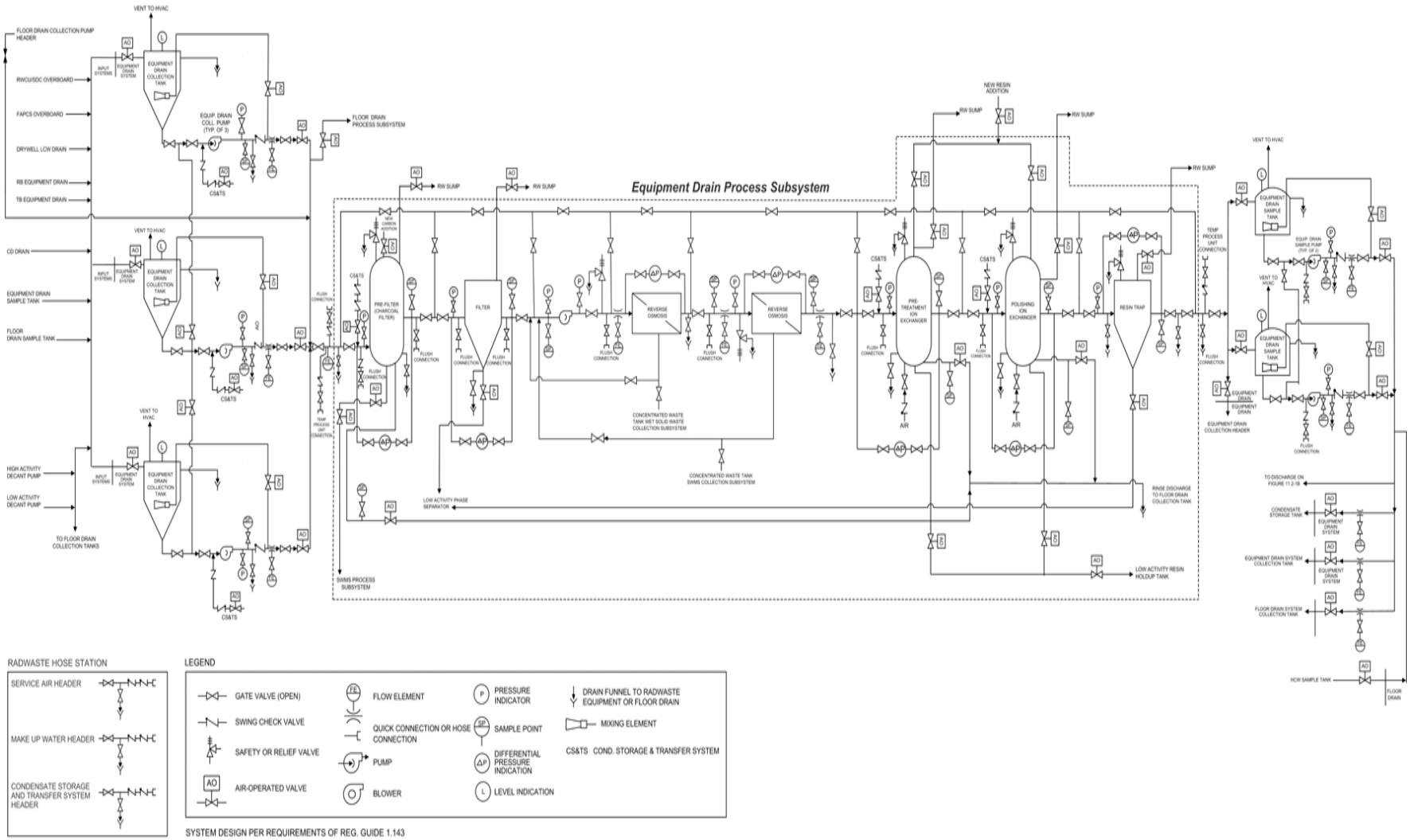

HITACHI

Figure 11.2-1a (Collection Tanks)

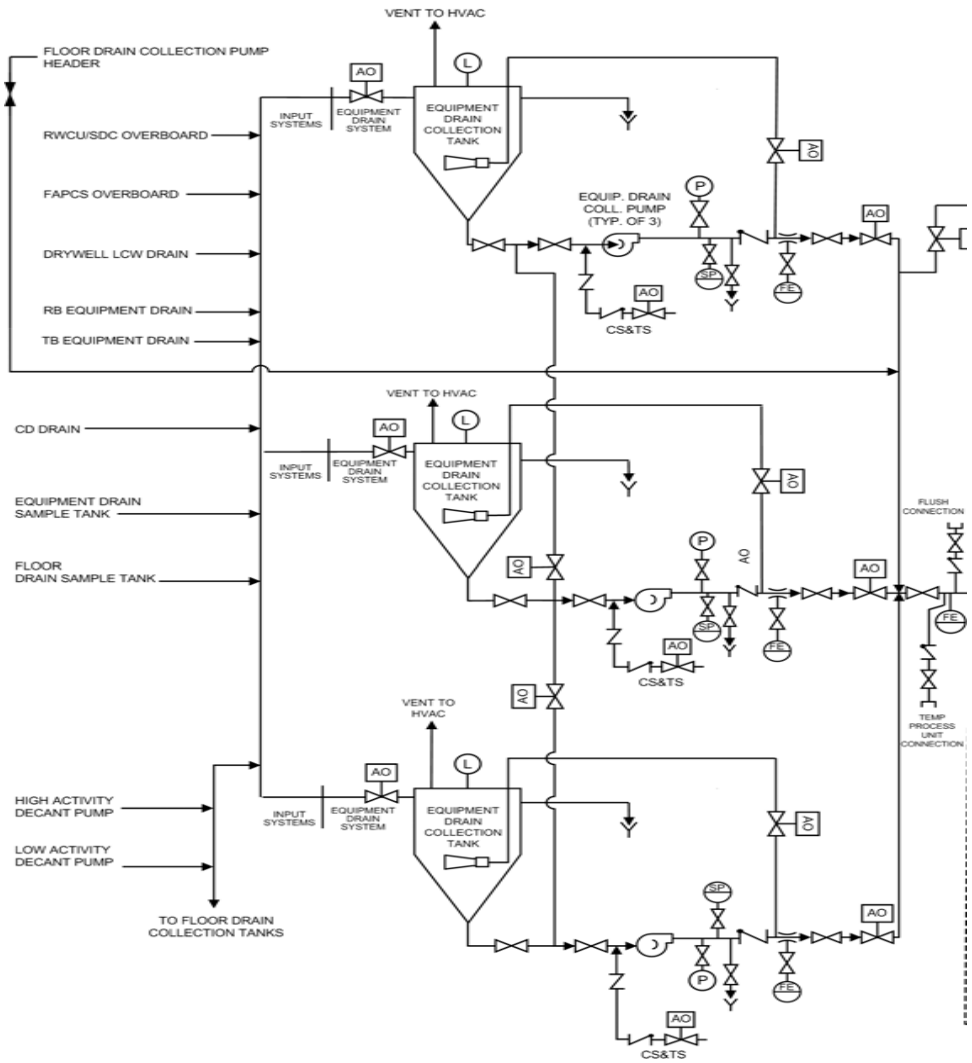

HITACHI

Figure 11.2-1a (Processing Train)

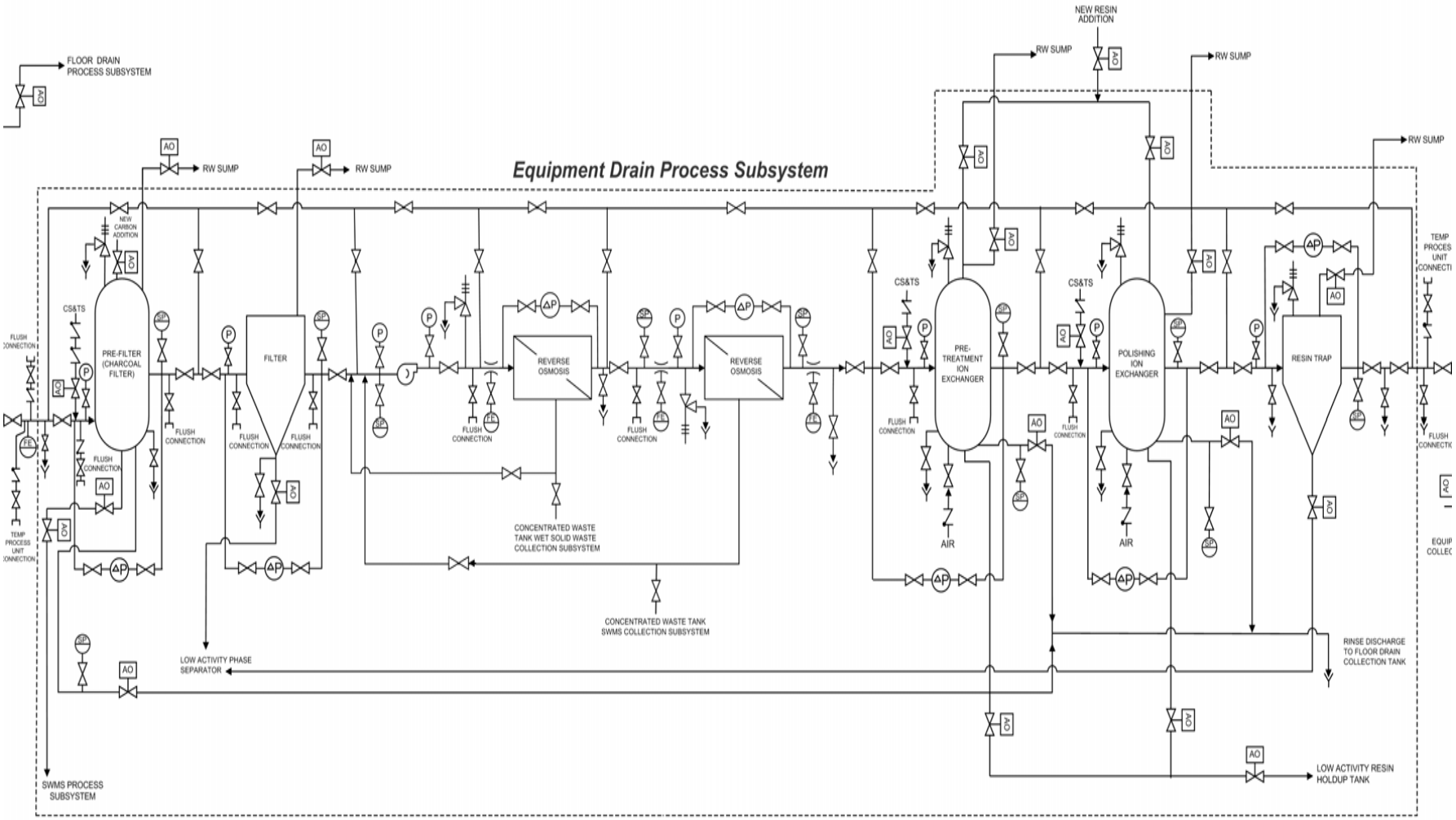

HITACHI

Figure 11.2-1a (Sample Tanks)

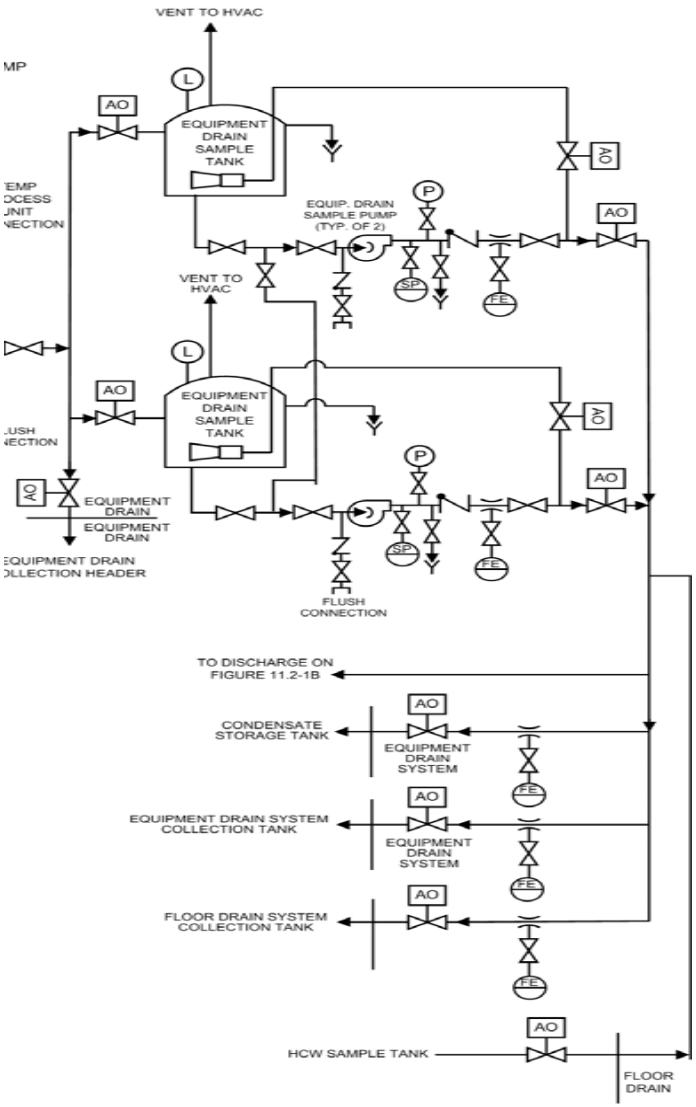

HITACHI

Summary

- Collection and Sample Tanks and Pumps are located on the lower elevation of the Radwaste Building (as these components will be required regardless of the type of processing)
- Processing equipment is modular and is located on the grade elevation of the Radwaste Building
  - Area is served with the Radwaste Building crane to allow for reconfiguration or replacement

HITACHI

U.S.NRC
UNITED STATES NUCLEAR REGULATORY COMMISSION
Protecting People and the Environment

Presentation to the ACRS Subcommittee

ESBWR Design Certification Review
Chapter 11
"Radioactive Waste Management"

June 22, 2010

ACRS Subcommittee Presentation
ESBWR Design Certification Review
Chapter 11

Purpose

- Brief the Subcommittee on the staff's review of open items for Chapter 11 of the ESBWR DCD application, resolved since last presentation
- Review and closure of open items based on applicant DCD Rev. 7 and RAI responses received from applicant.

ACRS Subcommittee Presentation
ESBWR Design Certification Review
Chapter 11

Project and Technical Review Team

- Lead PM
  - David Misenheimer, Project Manager
- Lead Tech. Reviewers
  - George R Cicotte, Sr. Health Physicist
  - Jean-Claude Dehmel, Sr. Health Physicist
  - Chang Li, Sr. Reactor Systems Engineer
  - Hulbert Li, Electronics Engineer

ACRS Subcommittee Presentation
ESBWR Design Certification Review
Chapter 11

SER Open Item in 11.2, Liquid Waste Management Systems

- Remaining RAI/Open Item 11.2-16 closed after confirming Rev 4 and 5 updates to DCD
  - Issue: augmentation of information on original design description and configuration - mobile systems
  - Resolution: revised DCD
    - Design relies on permanently installed systems
    - P&ID and description augmented
    - One COL Information Item, contamination minimization
  - No remaining open items in 11.2

ACRS Subcommittee Presentation
ESBWR Design Certification Review
Chapter 11

SER Open Item in 11.4, Solid Waste Management Systems

- Open Items (2) closed after confirming Rev 4 and 5 updates to DCD on ITAAC
  - Issue 1: (Open Item 11.4-18) original design description and configuration relied on mobile systems, similar to Open Item 11.2-16
  - Resolution: DCD scope amended
    - Revised design relies on permanently installed systems, P&ID/system descriptions augmented

ACRS Subcommittee Presentation
ESBWR Design Certification Review
Chapter 11

SER Open Item in 11.4, Solid Waste Management Systems (cont'd)

- Issue 2: (Open Item 11.4-15) ITAAC consistency with system description changes
- Resolution: DCD revised to amend ITAAC
  - Changes in ITAAC amended to address change from mobile to permanent systems
  - System descriptions/functions augmented to further develop functional description
  - COL Information Items amended/consolidated as 5 items versus previous 12, consistent with other DCD 11.4 revisions
- No remaining open items in 11.4

ACRS Subcommittee Presentation
ESBWR Design Certification Review
Chapter 11

Discussion/Committee Questions

ACRS Subcommittee Presentation
ESBWR Design Certification Review
Chapter 11

Key Regulations and Review Guidance

- Part 50.34a, 50.36a, & 50.34(f)(2)
- Part 50, Appendix I Design Objectives
- Part 52.47(b)(1) and 52.80(a)
- Part 20.1301, 20.1302, 20.1406, & Appendix B to Part 20
- Part 50, Appendix A, GDC 3, 60, 61, 63, & 64
- Primary SRP Sections: 11.1, 11.2, 11.3, 11.4, & 11.5
- SRP Section Interface: 2.3, 2.4, 3.2 - 3.7, 3.8, 7.5, 9.2, 9.3, 9.4, 9.5, 10.4, 12.2.2, 13, 14, 16, & 17
- Regulatory Guides 1.11, 1.21, 1.33, 1.52, 1.97, 1.109, 1.110, 1.111, 1.112, 1.113, 1.140, 1.143, 4.15, 8.8, & 8.10
- Industry Standards: AISI, ANS, ANSI, API, ASME, ASTM, NFPA, & TEMA

GE Hitachi Nuclear Energy

ESBWR Section 17.4: Reliability Assurance Program During Design Phase

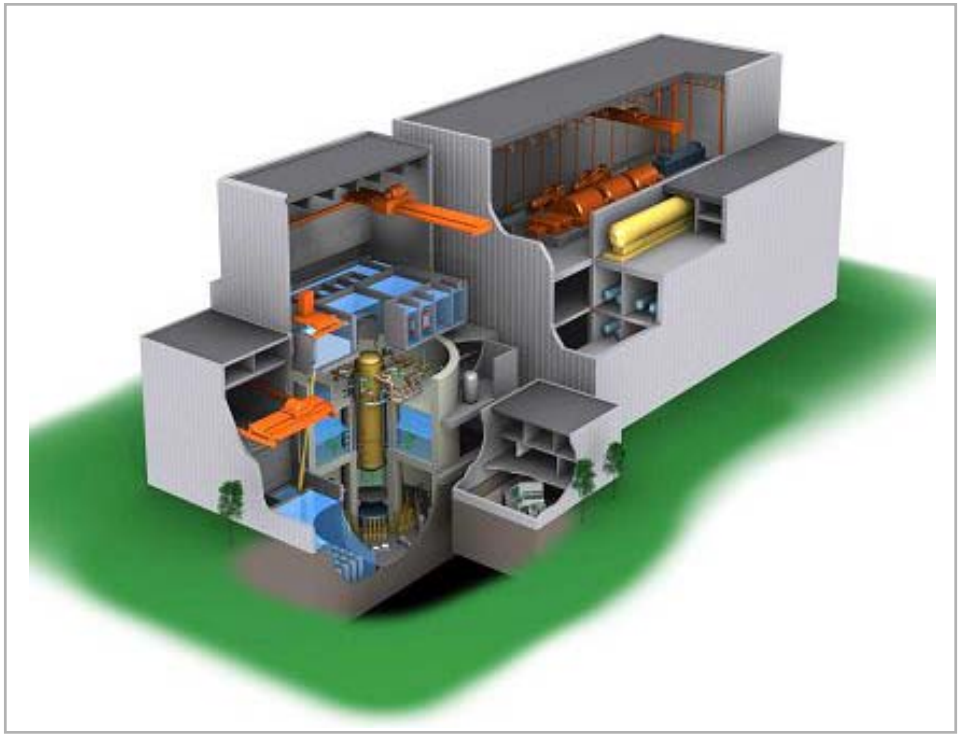

Advisory Committee on Reactor Safeguards

Gary Miller

Lee Dougherty

June 22, 2010

HITACHI

Introduction

Open Item from the 2007 SER With Open Items:

17.4-1 List of SSCs within the scope of Design Reliability Assurance Program

HITACHI

Open Item 17.4-1

Summary from SER:

In response to RAI 17.4-1, GEH stated that it will identify a comprehensive list of SSCs within the scope of Design Reliability Assurance Program (D-RAP) at a later phase of development of the D-RAP.

GEH is requested to provide a comprehensive list of SSCs within the scope of D-RAP to the NRC staff so that the NRC staff can complete its review of the ESBWR D-RAP.

HITACHI

Response to Open Item 17.4-1

Response:

SSCs in the scope of D-RAP for ESBWR design certification:

- RTNSS SSCs, and
- Risk-Significant SSCs, as identified in NEDO-33411, “Risk Significance of Structures, Systems and Components For the Design Phase of the ESBWR.”
  - NEDO-33411, Revision 2 has been submitted to the NRC.

HITACHI

Response to Open Item 17.4-1, continued

RTNSS SSCs are addressed in DCD Appendix 19A (SER Chapter 22)

Risk-Significant SSC identification methodology

- PRA basic event Risk Ranking Criteria
  - Fussell-Vesely $\geq$ .01
  - Risk Achievement Worth $\geq$ 5 for Individual Components
    $\geq$ 50 for Common Cause Failures
- Seismic Margins Assessment Components that require a High Confidence, Low Probability of Failure to withstand the Safe Shutdown Earthquake

HITACHI

Response to Open Item 17.4-1, continued

Additional Risk-Significant SSCs:

- RTNSS SSCs meeting Probabilistic Criteria
  - SSCs relied upon to meet NRC Safety Goals
  - SSCs relied upon to meet containment performance goals
- SSCs Identified in an Expert Review Process
  - Operating Experience Review
  - PRA and Severe Accident Insights
  - Integrated Perspective and Cumulative Effects

<u>Conclusion:</u>

GEH has provided a comprehensive list of SSCs in the scope of D-RAP.

HITACHI

Summary

Open Item 17.4-1 from the 2007 SER has been addressed.

HITACHI

Backup Slide

HITACHI

ITAAC

Table 3.6-1 ITAAC For The Design Reliability Assurance Program		
Design Commitment	**Inspections, Tests, Analyses**	**Acceptance Criteria**
1. Ensure that the design of systems, structures, and components within the scope of the reliability assurance program (RAP SSCs) is consistent with the risk insights and key assumptions (e.g., SSC design, reliability, and availability).	An analysis will confirm that the design of all RAP SSCs has been completed in accordance with applicable D-RAP activities.	All RAP SSCs have been designed in accordance with the applicable reliability assurance activities for the D-RAP.

HITACHI

U.S.NRC
UNITED STATES NUCLEAR REGULATORY COMMISSION
Protecting People and the Environment

Presentation to the ACRS Subcommittee

ESBWR Design Certification Review
Chapter 11
"Radioactive Waste Management"

June 22, 2010

ACRS Subcommittee Presentation
ESBWR Design Certification Review
Chapter 11

Purpose

- Brief the Subcommittee on the staff's review of open items for Chapter 11 of the ESBWR DCD application, resolved since last presentation
- Review and closure of open items based on applicant DCD Rev. 7 and RAI responses received from applicant.

ACRS Subcommittee Presentation
ESBWR Design Certification Review
Chapter 11

Project and Technical Review Team

- Lead PM
  - David Misenheimer, Project Manager
- Lead Tech. Reviewers
  - George R Cicotte, Sr. Health Physicist
  - Jean-Claude Dehmel, Sr. Health Physicist
  - Chang Li, Sr. Reactor Systems Engineer
  - Hulbert Li, Electronics Engineer

ACRS Subcommittee Presentation
ESBWR Design Certification Review
Chapter 11

SER Open Item in 11.2, Liquid Waste Management Systems

- Remaining RAI/Open Item 11.2-16 closed after confirming Rev 4 and 5 updates to DCD
  - Issue: augmentation of information on original design description and configuration - mobile systems
  - Resolution: revised DCD
    - Design relies on permanently installed systems
    - P&ID and description augmented
    - One COL Information Item, contamination minimization
  - No remaining open items in 11.2

ACRS Subcommittee Presentation
ESBWR Design Certification Review
Chapter 11

SER Open Item in 11.4, Solid Waste Management Systems

- Open Items (2) closed after confirming Rev 4 and 5 updates to DCD on ITAAC
  - Issue 1: (Open Item 11.4-18) original design description and configuration relied on mobile systems, similar to Open Item 11.2-16
  - Resolution: DCD scope amended
    - Revised design relies on permanently installed systems, P&ID/system descriptions augmented

ACRS Subcommittee Presentation
ESBWR Design Certification Review
Chapter 11

SER Open Item in 11.4, Solid Waste Management Systems (cont'd)

- Issue 2: (Open Item 11.4-15) ITAAC consistency with system description changes
- Resolution: DCD revised to amend ITAAC
  - Changes in ITAAC amended to address change from mobile to permanent systems
  - System descriptions/functions augmented to further develop functional description
  - COL Information Items amended/consolidated as 5 items versus previous 12, consistent with other DCD 11.4 revisions
- No remaining open items in 11.4

ACRS Subcommittee Presentation
ESBWR Design Certification Review
Chapter 11

Discussion/Committee Questions

ACRS Subcommittee Presentation
ESBWR Design Certification Review
Chapter 11

Key Regulations and Review Guidance

- Part 50.34a, 50.36a, & 50.34(f)(2)
- Part 50, Appendix I Design Objectives
- Part 52.47(b)(1) and 52.80(a)
- Part 20.1301, 20.1302, 20.1406, & Appendix B to Part 20
- Part 50, Appendix A, GDC 3, 60, 61, 63, & 64
- Primary SRP Sections: 11.1, 11.2, 11.3, 11.4, & 11.5
- SRP Section Interface: 2.3, 2.4, 3.2 - 3.7, 3.8, 7.5, 9.2, 9.3, 9.4, 9.5, 10.4, 12.2.2, 13, 14, 16, & 17
- Regulatory Guides 1.11, 1.21, 1.33, 1.52, 1.97, 1.109, 1.110, 1.111, 1.112, 1.113, 1.140, 1.143, 4.15, 8.8, & 8.10
- Industry Standards: AISI, ANS, ANSI, API, ASME, ASTM, NFPA, & TEMA

GE Hitachi Nuclear Energy

ESBWR Section 17.4: Reliability Assurance Program During Design Phase

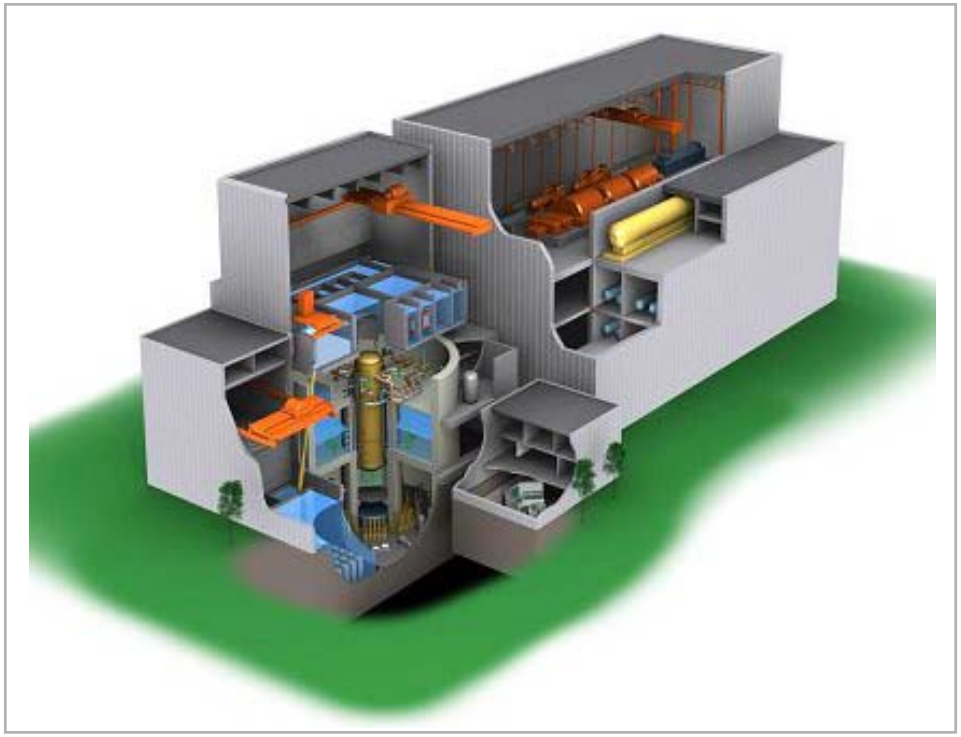

Advisory Committee on Reactor Safeguards

Gary Miller

Lee Dougherty

June 22, 2010

HITACHI

Introduction

Open Item from the 2007 SER With Open Items:

17.4-1 List of SSCs within the scope of Design Reliability Assurance Program

HITACHI

Open Item 17.4-1

Summary from SER:

In response to RAI 17.4-1, GEH stated that it will identify a comprehensive list of SSCs within the scope of Design Reliability Assurance Program (D-RAP) at a later phase of development of the D-RAP.

GEH is requested to provide a comprehensive list of SSCs within the scope of D-RAP to the NRC staff so that the NRC staff can complete its review of the ESBWR D-RAP.

HITACHI

Response to Open Item 17.4-1

Response:

SSCs in the scope of D-RAP for ESBWR design certification:

- RTNSS SSCs, and
- Risk-Significant SSCs, as identified in NEDO-33411, “Risk Significance of Structures, Systems and Components For the Design Phase of the ESBWR.”
  - NEDO-33411, Revision 2 has been submitted to the NRC.

HITACHI

Response to Open Item 17.4-1, continued

RTNSS SSCs are addressed in DCD Appendix 19A (SER Chapter 22)

Risk-Significant SSC identification methodology

- PRA basic event Risk Ranking Criteria
  - Fussell-Vesely $\geq$ .01
  - Risk Achievement Worth $\geq$ 5 for Individual Components
    $\geq$ 50 for Common Cause Failures
- Seismic Margins Assessment Components that require a High Confidence, Low Probability of Failure to withstand the Safe Shutdown Earthquake

HITACHI

Response to Open Item 17.4-1, continued

Additional Risk-Significant SSCs:

- RTNSS SSCs meeting Probabilistic Criteria
  - SSCs relied upon to meet NRC Safety Goals
  - SSCs relied upon to meet containment performance goals
- SSCs Identified in an Expert Review Process
  - Operating Experience Review
  - PRA and Severe Accident Insights
  - Integrated Perspective and Cumulative Effects

<u>Conclusion:</u>

GEH has provided a comprehensive list of SSCs in the scope of D-RAP.

HITACHI

Summary

Open Item 17.4-1 from the 2007 SER has been addressed.

HITACHI

Backup Slide

HITACHI

ITAAC

Table 3.6-1 ITAAC For The Design Reliability Assurance Program		
Design Commitment	**Inspections, Tests, Analyses**	**Acceptance Criteria**
1. Ensure that the design of systems, structures, and components within the scope of the reliability assurance program (RAP SSCs) is consistent with the risk insights and key assumptions (e.g., SSC design, reliability, and availability).	An analysis will confirm that the design of all RAP SSCs has been completed in accordance with applicable D-RAP activities.	All RAP SSCs have been designed in accordance with the applicable reliability assurance activities for the D-RAP.

HITACHI

U.S.NRC

United States Nuclear Regulatory Commission

Protecting People and the Environment

Presentation to the ACRS Subcommittee

ESBWR Design Certification Application Review

SER Chapter 17
"Quality Assurance"

June 22, 2010

ESBWR DCD Chapter 17
Staff Review Team

- **Project Managers**
  - Amy Cubbage, Lead PM, DNRL/NGE1
  - David Misenhimer, Chapter PM, DNRL/NGE1
- **Technical Staff Presenters**
  - Todd Hilsmeier, DSRA/SPRA

Summary of Technical Discussion for ESBWR DCD Chapter 17

DCD Section		Summary of Discussion
17.4	Reliability Assurance Program during Design Phase	Discussion of staff's review of the list of systems, structures, and components (SSCs) within the scope of the Reliability Assurance Program (RAP)

Section 17.4 – Reliability Assurance Program During Design Phase

Background

- In October 2007, the staff presented to ACRS Subcommittee its review of ESBWR DCD, Chapter 17 ("Quality Assurance"):
  - Staff identified an open item whereby the applicant will identify the SSCs within the scope of the RAP (RAP SSCs)
- By ACRS letter dated November 20, 2007, ACRS planned to review the staff's resolution of this open item
- In May 2008, the applicant submitted the list of RAP SSCs

Section 17.4 – Reliability Assurance Program During Design Phase

SSCs Within the Scope of RAP

- The RAP SSCs (within the design certification envelop) include:
  - All RTNSS SSCs identified under ESBWR DCD, Tier 2, Section 19A ("Regulatory Treatment of Non-Safety Systems"), which was reviewed as part of ESBWR DCD Chapter 19
  - Additional SSCs identified under Licensing Topical Report NEDO-33411, Revision 2 ("Risk Significance of Structures, Systems and Components for the Design Phase of the ESBWR")
- ESBWR DCD, Section 17.4 specifies COL Information Item 17.4-1-A:
  - The COL Applicant will identify the SSCs within the scope of the plant-specific RAP to include relevant COL site- and plant-specific information (e.g., the RAP SSCs identified in the DCD, updated using COL site- and plant-specific information)

Section 17.4 – Reliability Assurance Program During Design Phase

Staff's Review of NEDO-33411 – Methodology for Identifying Additional RAP SSCs

- Staff issued about 10 RAIs on the methodology for identifying additional RAP SSCs. These RAIs addressed such areas as:
  - Basis for risk importance thresholds that were used for identifying additional RAP SSCs
  - Use of PRA undeveloped basic events for identifying additional RAP SSCs
  - Use of seismic margins analysis (SMA) in identifying additional RAP SSCs

Section 17.4 – Reliability Assurance Program During Design Phase

Staff's Review of NEDO-33411 – Methodology (continued)

- The methodology for identifying additional RAP SSCs includes the use of probabilistic and deterministic analyses:
  - Use of at-power and shutdown PRAs for internal and external events resulting in core damage and large radiological releases
  - Consideration of risk insights and assumptions from the PRA and severe accident evaluations
  - Insights from the SMA
  - Consideration of operating experience from currently operating reactors
  - Use of an expert panel to review information associated with risk significance determinations
- Staff concludes that the methodology used to identify the RAP SSCs is adequate and meets the guidance in Item E of SECY-95-132 and SRP Section 17.4

Section 17.4 – Reliability Assurance Program During Design Phase

Staff's Review of NEDO-33411 – List of Additional RAP SSCs

- Staff issued about 25 RAIs on the list of additional RAP SSCs. These RAIs addressed such areas as:
  - Inclusion of additional SSCs based on the results, insights, and assumptions from the risk evaluations (e.g., specific SSCs associated with the SLCS, ICS, AC power, GDCS, remote shutdown panel)
  - Bases for not considering some SSCs in the scope of RAP (e.g., SSCs associated with the BOPCWS, CFWS, SLCS electrical heaters)
- The additional RAP SSCs (within the design certification envelop) are identified in Table 6 of NEDO-33411
- Staff concludes that the list of RAP SSCs is adequate and meets the guidance in Item E of SECY-95-132 and SRP Section 17.4

Section 17.4 – Reliability Assurance Program During Design Phase

Summary

- Staff concludes that the methodology used to identify the RAP SSCs is adequate and meets the guidance in Item E of SECY-95-132 and SRP Section 17.4
- Staff concludes that the list of RAP SSCs is adequate and meets the guidance in Item E of SECY-95-132 and SRP Section 17.4
- All RAIs associated with NEDO-33411 and SRP Section 17.4 are resolved

Discussion/Committee Questions

Backup Slides
Reliability Assurance Program (RAP)

- Purpose of RAP is to ensure:
  - The reactor is designed, constructed, and operated consistent with the risk insights and key assumptions
  - The RAP SSCs do not degrade to an unacceptable level of reliability, availability, or condition during plant operations
  - The frequency of transients that challenge these SSCs is minimized
  - These SSCs will function reliably when challenged

- RAP is implemented in two stages:
  - Design-reliability assurance program (D-RAP) prior to fuel load
  - Use of operational programs to meet the objectives of RAP during operations phase

Backup Slides
Design Reliability Assurance Program

- D-RAP implementation includes:

  - Establishing and applying the essential elements of D-RAP.

    These are controls/processes that ensure the risk insights and key assumptions are consistent with the designed and constructed plant, and that the list of RAP SSCs is appropriately developed, maintained, and communicated to the appropriate organizations

  - Subjecting the non-safety-related RAP SSCs to QA controls (Part V, "Nonsafety Related SSC Quality Controls," of SRP Section 17.5)

Backup Slides
Design Reliability Assurance Program

- DC Applicant's Responsibilities:
  - Describe the details of the D-RAP (e.g., scope, purpose, objectives, framework, and phases of D-RAP)
  - Establish and apply the essential elements of D-RAP during DC design activities
  - Determine the RAP SSCs (within the scope of the DC) using a combination of probabilistic, deterministic, and other methods of analysis
  - For the non-safety-related RAP SSCs, implement QA controls during DC design activities
  - Propose an D-RAP ITAAC

- COL Applicant's Responsibilities:
  - Establish and apply the essential elements of D-RAP during COL design activities
  - Determine the RAP SSCs in the COL's D-RAP by introducing plant-specific information
  - For the non-safety-related RAP SSCs, implement QA controls during COL design activities
  - Propose a process for integrating RAP into operational programs

- COL Holder's Responsibilities:
  - Apply the essential elements of D-RAP during COL design and construction activities (which includes updating the list of RAP SSCs as changes are made to the plant-specific design and PRA)
  - For the non-safety-related RAP SSCs, implement QA controls during design and construction activities
  - Complete the D-RAP ITAAC
  - Integrates RAP into operational programs (e.g., maintenance rule, quality assurance, surveillance testing, inservice inspection, inservice testing, and maintenance programs)

GE Hitachi Nuclear Energy

ESBWR Chapter 19A: Regulatory Treatment of Non-Safety Systems

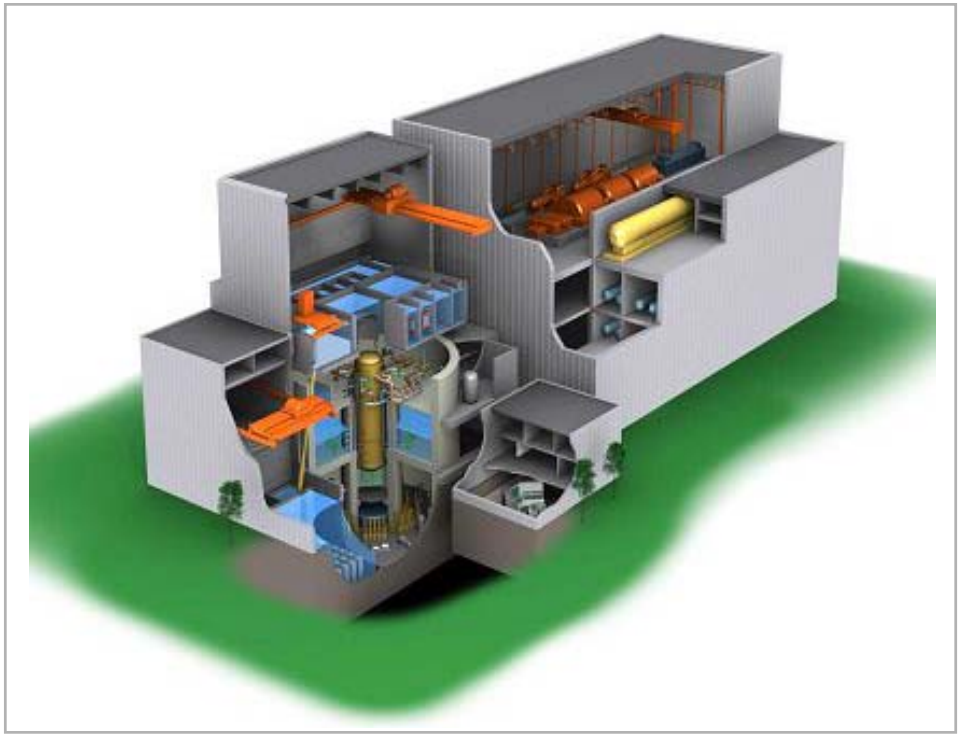

Advisory Committee on Reactor Safeguards

Rick Wachowiak

Gary Miller

June 22, 2010

HITACHI

Introduction

Prior to DCD rev 4, issues focused on categorization

Presented configuration changes needed to resolve categorization in June 2008

Nine open items in the SER – Focus is on Treatment

- 22.5-6 Seismic category of some RTNSS support systems
- 22.5-7 Use of IBC-2003 criteria for some RTNSS equipment
- 22.5-21 Treatment for systems designated as “Support” in DCD 19A
- 22.5-9 External hazard protection for RTNSS equipment
- 22.5-5 Flood protection for RTNSS equipment
- 22.5-16 Treatment provisions for some RTNSS equipment
- 22.5-22 Instrumentation and bases for ACM entries not clear
- 22.5-23 Number of FAPCS trains required to be available
- 22.5-24 Number of SDG trains required to be available

HITACHI

Open Issues 22.5-6 and 22.5-7

Summary of open items:

- Post-accident monitoring equipment designed using IBC-2003 seismic criteria
- Not clear how these criteria provide adequate protection

Response:

- Reclassified post-accident monitoring equipment to be the same as long-term cooling
- Designed as seismic Category I & II

HITACHI

Changes for Long Term Safety and Seismic

Four functions with two sets of requirements for treatment

- B1 - Core cooling
- B1 - Containment Integrity
- B1 - Control room habitability with respect to dose
- B2 - Post-accident monitoring

Combined so that there is only one set of treatment requirements

- $B = B1 \sqcup B2$

Requirements for B1 now apply to all

HITACHI

RTNSS B Design Treatment

Redundant Functions

Fire and flood protected

Hurricane category 5 missile protection

Designed for accident environment

Seismic Category II

Quality suppliers (not Appendix B)

Availability Controls Manual

HITACHI

Structures Housing RTNSS B Functions

System	RTNSS Criterion	Location	Building Category
FPS Diesel Driven Pump	B	Fire Pump Enclosure	Seismic Cat. I
FPS Motor Driven Pump	B	Fire Pump Enclosure	Seismic Cat. I
FPS to FAPCS Connection	B	Reactor Building	Seismic Cat. I
PARs	B	Containment	Seismic Cat. I
PCCS Vent Fans	B	Containment	Seismic Cat. I
CRHAVS Air Handling Units	B	Control Building	Seismic Cat. I
Emergency Lighting	B	Control Building	Seismic Cat. I
FPS Water Tank	B	Fire Pump Enclosure	Seismic Cat. I
FPS Diesel Fuel Oil Tank	B	Fire Pump Enclosure	Seismic Cat. I
Ancillary Diesel Generators	B	Ancillary DG Building	Seismic Cat. II
Ancillary AC Power Buses	B	Ancillary DG Building	Seismic Cat. II
Ancillary DG Fuel Oil Tank	B	Ancillary DG Building	Seismic Cat. II
Ancillary DG Fuel Oil Transfer Pump	B	Ancillary DG Building	Seismic Cat. II
Ancillary Diesel Building HVAC	B	Ancillary DG Building	Seismic Cat. II
CRHAVS Air Handling Unit auxiliary heaters and coolers	B	Control Building	Seismic Cat. I

DCD Table 19A-3

HITACHI

Open Issue 22.5-21

Summary of open item:

- DCD was not clear concerning treatment of support systems
- Three designations
  - HRO – High Regulatory Oversight
  - LRO – Low Regulatory Oversight
  - Support
- Only HRO and LRO treatment was defined in the DCD

Response:

- Clarified that all "Support" systems received LRO treatment
- Explicitly added treatment for availability controls and external hazard protection for each system

HITACHI

RTNSS C Design Treatment

Redundant active components

Fire and flood protected

Hurricane category 5 missile protection

Designed for accident environment

Quality suppliers (not Appendix B)

Technical Specifications for SSCs Needed to Meet CDF and LRF Goals

Availability Controls Manual for Frontline Systems

HITACHI

RTNSS Functions and Availability Treatment

RTNSS Function	Description	Availability Controls
DPS – ARI Actuation	A - ATWS Rule	ACLCO 3.3.1
FPS Diesel Driven Pump	B - Long Term Core Cooling: RPV At-Power and Spent Fuel Pool; Long Term Containment Integrity	ACLCO 3.7.1
DPS – GDCS Injection	C - Focused PRA (CDF, LRF)High Regulatory Oversight	TS LCO 3.3.8.1
DPS – Scram	C - Focused PRA (CDF, LRF)	ACLCO 3.3.4
FAPCS (LPCI, SPC Modes)	C - Focused PRA (Uncertainty)	ACLCO 3.7.2 ACLCO 3.7.3
BiMAC Device	D - Containment Performance	AC 4.1
Reactor Building HVAC Accident Exhaust Filters	E – Adverse System Interactions	ACLCO 3.7.5
FPS Water Tank	B - Supports core cooling for refill of pools	ACLCO 3.7.1
Ancillary AC Power Buses	B - AC power distribution from Ancillary Diesel Generators to plant loads.	Maintenance Rule
Standby Diesel Generators	C - Supports FAPCS operation	ACLCO 3.8.1 ACLCO 3.8.2
6.9 kV PIP Buses	C - AC power distribution from Standby Diesel Generators to plant loads associated with FAPCS	Maintenance Rule

Excerpts from DCD Table 19A-2

Open Issues 22.5-5 and 22.5-9

Summary of open items:

- Missile protection for non-seismic structures housing RTNSS equipment not provided
- Flood protection for RTNSS equipment not provided

Response:

- Added table 19A-4 to describe external hazard protection applicable to buildings housing RTNSS equipment
- Added ITAAC to confirm hazard protection for RTNSS equipment

HITACHI

Capability of RTNSS Related Structures

System Location	Internal Flooding	External Flooding	Internal Missiles	Extreme Wind and Missiles
Reactor Building Control Building Fuel Building Fire Pump Enclosure Ancillary DG building	The design/ installation of RTNSS equipment includes protection from the effects of internal flooding.	Seismic Category I structures are designed to withstand the flood level and groundwater level specified in Table 2.0-1 and described in Subsection 3.4.1.2. All exterior access openings are above flood level and exterior penetrations below design flood and groundwater levels are appropriately sealed as described in Subsection 3.4.1.1. On-site storage tanks are designed and constructed to minimize the risk of catastrophic failure and are located to allow drainage without damage to site facilities in the event of a tank rupture per Subsection 3.4.1.2. The Ancillary DG Building is designed to withstand external flooding with the same acceptance criteria as a Seismic Category I Structure.	There are no credible sources of internal missiles per Section 3.5.	Seismic Category I structures designed for tornado and extreme wind phenomena are described in Section 3.3 and Subsection 3.5.1.4. The Ancillary DG Building is designed for tornado and Category 5 hurricane wind loads . RTNSS systems in the Ancillary Diesel Building are protected from Category 5 hurricane wind and missiles .
Electric Building Service Water Building Turbine Building	The design/ installation of RTNSS equipment includes protection from the effects of internal flooding.	All exterior access openings are above flood level and exterior penetrations below design flood and groundwater levels are appropriately sealed; basemat and walls are designed for hydrostatic loading, therefore protected from external flooding.	N/A	The EB and SF are RTNSS Structures designed for Category 5 hurricane winds. RTNSS systems in the EB and SF are protected from Category 5 hurricane wind and missiles. The TB structure is designed for tornado and Category 5 hurricane wind loads . The design/installation of the RTNSS systems in the TB includes protection to comply with the requirement of Subsection 19A.8.3 to withstand winds and missiles generated from Category 5 hurricanes.
PSW System located outdoors	N/A	The design/installation of the RTNSS system includes protection from the effects of flooding.	N/A	The design/installation of the RTNSS system complies with the requirement of Subsection 19A.8.3 to withstand winds and missiles generated from Category 5 hurricanes.

DCD Table 19A-4

HITACHI

Open Issue 22.5-16

Summary of open item:

- Details of the oversight for some RTNSS equipment were not apparent

Response:

- Provided revision to Table 19A-3 to specifically identify availability controls and monitoring

HITACHI

Open Issue 22.5-22

Summary of open item:

- Availability controls (AC) did not state the associated instrumentation functions and the number of required divisions in the ACLCOs for some functions
- AC bases do not explicitly state the minimum level of system degradation that corresponds to a function being unavailable, or the number of divisions used to determine the test interval for each required division (or component) for AC Surveillance Requirements (ACSR)

Response:

- Any associated component failure causes entry into action "A" and an availability determination must be made at that time
- Clarified the number of divisions required for each ACLCO

HITACHI

Open Issue 22.5-23

Summary of open item:

- No AC Surveillance Requirements (ACSR) for FAPCS
- PRA assumes two FAPCS loops available, but ACLCO only requires one for modes 1, 2, 3 & 4

Response:

- FAPCS is a normally operating system, so no ACSR is required
- Revised ACLCO to require two loops to be available
  - 14 day ACLCO completion time for one loop unavailable

HITACHI

Open Issue 22.5-24

Summary of open item:

- PRA assumes two standby diesel generators available, but ACLCO only requires one for modes 1, 2, 3 & 4
- Not consistent with FAPCS availability requirements

Response:

- The level of redundancy in the ACLCO is consistent with the risk significance of the standby diesel generators
- ACLCO 3.0.3 requires the licensee to "Assess and Manage the risk of the resulting unit configuration"

HITACHI

Summary

GEH has addressed all open items related to the regulatory treatment of non-safety systems.

HITACHI

Presentation to the ACRS Subcommittee

ESBWR Design Certification Review
Chapter 19A (SER Chapter 22)

Presented by
NRO/DNRL & NRO/DSRA & NRO/DCIP

June 22, 2010

ACRS Subcommittee Presentation
ESBWR Design Certification Review
Chapter 19A (FSER Chap. 22)

Purpose:

- Brief the Subcommittee on the resolution of open items leading to the FSER for the ESBWR DCD application, Chapter 19A - Regulatory Treatment of Non-Safety Systems (RTNSS)

ACRS Subcommittee Presentation
ESBWR Design Certification Review
Chapter 19A (FSER Chap. 22)

Outline of Presentation:

- Background
- RAI Status Summary
- Resolution of Significant Open Items

ACRS Subcommittee Presentation
ESBWR Design Certification Review
Chapter 19

Background

- Prior Subcommittee briefings June and August 2008 on SER with open items
- Full Committee briefed on October 3, 2008
- Interim ACRS letter on Chapters 19 & 22, October 29, 2008 – no specific comments on Chapter 22
  - Committee will review resolution of open items at a future meeting
- Staff response to ACRS letter in November 2008

ACRS Subcommittee Presentation
ESBWR Design Certification Review
Chapter 19A (FSER Chap. 22)

RAI Status Summary:

- All RAIs have been addressed by GEH and responses have been reviewed by staff
- All previous open items have been closed
- FSER drafted for ACRS review

Key Issues Resolved Since Last Meeting

- Maintaining long-term safety (RTNSS criterion B)
  - Seismic design of RTNSS B SSCs
  - Flood related design
  - High winds related design
- Controlling the availability of RTNSS scope SSCs
  - Technical Specifications
  - Availability Controls Manual (ACM)
  - Assessing and managing risk via the Maintenance program

ACRS Subcommittee Presentation
ESBWR Design Certification Review
Chapter 19A (FSER Chap. 22)

Open Issues 22.5-6 and 22.5-7

- Summary of open items:
  - Post-accident monitoring equipment designed using IBC-2003 seismic criteria
  - Not clear how these criteria provide adequate protection
- GEH Response:
  - Re-classified post-accident monitoring equipment to be the same as long-term cooling
  - Designed as seismic Category I & II
- Staff Findings:
  - Seismic design for long-term safety SSCs now consistent with Commission ‘s objective for seismic protection of RTNSS SSCs
  - Response acceptable

ACRS Subcommittee Presentation
ESBWR Design Certification Review
Chapter 19A (FSER Chap. 22)

Open Issue 22.5-21

- Summary of open items:
  - DCD was not clear concerning treatment category designated "support"
  - Only HRO and LRO treatment was defined in the DCD
- GEH Response:
  - Clarified that all "Support" systems received LRO treatment
- Staff Findings:
  - treatment of "support" SSCs well defined and acceptable
  - Availability of "support" SSCs covered adequately in ACM
  - Response acceptable

ACRS Subcommittee Presentation
ESBWR Design Certification Review
Chapter 19A (FSER Chap. 22)

Open Issues 22.5-5 and 22.5-9

- Summary of open items:
  - Missile protection for non-seismic structures housing RTNSS equipment not provided
  - Flood protection for RTNSS equipment not provided
- Response:
  - Added table 19A-4 to describe external hazard protection applicable to buildings housing RTNSS equipment
  - Added ITAAC to confirm hazard protection for RTNSS equipment
- Staff Findings:
  - Design of RTNSS SSCs for protection against the effects for flooding and high winds and associated design criteria adequately described in DCD
  - Design criteria acceptable to staff

ACRS Subcommittee Presentation
ESBWR Design Certification Review
Chapter 19A (FSER Chap. 22)

Open Issue 22.5-16

- Summary of open item:
  - Details of the oversight for some RTNSS equipment were not apparent
- Response:
  - Provided revision to Table 19A-3 to specifically identify availability controls and monitoring
- Staff Findings:
  - Treatment of RTNSS SSCs clarified adequately in DCD
  - Response acceptable

ACRS Subcommittee Presentation
ESBWR Design Certification Review
Chapter 19A (FSER Chap. 22)

Open Issue 22.5-22

- Summary of open item:
  - Availability controls (AC) did not state the associated instrumentation functions and the number of required divisions in the ACLCOs for some functions
- Response:
  - Clarified the number of divisions required for each ACLCO
- Staff Findings:
  - ACs have been updated where necessary to specify what parts of an SSC and support functions need to be available to satisfy ACLCO
  - Relationship between support system availability and ACLCO now explicitly stated in ACM
  - Response acceptable

ACRS Subcommittee Presentation
ESBWR Design Certification Review
Chapter 19A (FSER Chap. 22)

Open Issue 22.5-22

- Summary of open item:
  - AC bases do not explicitly state the minimum level of system degradation that corresponds to a function being unavailable, or the number of divisions used to determine the test interval for each required division (or component) for AC Surveillance Requirements (ACSR)
- Response:
  - Any associated component failure causes entry into action “A” and an availability determination must be made at that time
- Staff Findings:
  - Conditions for entering Action statement well defined in ACM
  - Response acceptable

ACRS Subcommittee Presentation
ESBWR Design Certification Review
Chapter 19A (FSER Chap. 22)
Open Issue 22.5-23

- Summary of open item:
  - No AC Surveillance Requirements (ACSR) for FAPCS
  - PRA assumes two FAPCS loops available, but ACLCO only requires one for modes 1, 2, 3 & 4
- Response:
  - FAPCS is a normally operating system, so no ACSR is required
  - Revised ACLCO to require two loops to be available — 14 day ACLCO completion time for one loop unavailable
- Staff Findings:
  - Staff agrees ACSR not needed for SSCs that are normally operating
  - Bases for FAPCS AC clarified in ACM
  - Repair times in ACM are reasonable and bounded by assumptions in PRA

ACRS Subcommittee Presentation
ESBWR Design Certification Review
Chapter 19A (FSER Chap. 22)

Open Issue 22.5-24

- Summary of open item:
  - PRA assumes two standby diesel generators available, but ACLCO only requires one for modes 1, 2, 3 & 4
  - Not consistent with FAPCS availability requirements
- Response:
  - The level of redundancy in the ACLCO is consistent with the risk significance of the standby diesel generators
  - ACLCO 3.0.3 requires the licensee to “Assess and Manage the risk of the resulting unit configuration”
- Staff Findings:
  - Response acceptable: ACLCO 3.0.3 in conjunction with the Maintenance Rule section (a)(4) assures the risk of only having one SDG will be assessed using best available PRA model and data

ACRS Subcommittee Presentation
ESBWR Design Certification Review
Chapter 19A (FSER Chap. 22)

- Discussion/Committee Questions