AP1000DCDFileNPEm Resource

From: Buckberg, Perry
Sent: Wednesday, July 07, 2010 4:17 PM
To: Buckberg, Perry
Subject: FW: smaller files
Attachments: Copy of RAI-TR54-26 R2A-NRC DRAFT.doc; Copy of RAI-TR54-15 R3A-NRC DRAFT.doc

---

From: Altmayer, Scott A [mailto:altmaysa@westinghouse.com]
Sent: Sunday, June 13, 2010 11:21 AM
To: Buckberg, Perry
Subject: smaller files

Perry,

Here are nine of the main draft RAIs for your review…(designated as next rev alpha)…for audit action items: 5, 9, 10, 12, 14, 15.
Those for action items 7, 8, 16 are coming by monday, 6/14.

I am making these available to Joe/Rich since they may be in PA on the Ch. 3.7 audit.
As their/your time allows early this week (while they are in PA), Rob M./Steve S./I can be available to talk comments directly with them. Thank you. Please call me with any comments…I am out moving household on Monday.

--SCOTT ALTMAYER--
AP1000 Licensing and Customer Interface
Ph: 412-374-6079
Cell: 440-289-0624

Hearing Identifier: AP1000_DCD_Review
Email Number: 481

Mail Envelope Properties (44CD2E65B0FF0E499CB32BC30CF781F01081527F9A)

Subject: FW: smaller files
Sent Date: 7/7/2010 4:16:38 PM
Received Date: 7/7/2010 4:16:42 PM
From: Buckberg, Perry

Created By: Perry.Buckberg@nrc.gov

Recipients:
"Buckberg, Perry" <Perry.Buckberg@nrc.gov>
Tracking Status: None

Post Office: HQCLSTR01.nrc.gov

Files	**Size**	**Date & Time**
MESSAGE	811	7/7/2010 4:16:42 PM
Copy of RAI-TR54-26 R2A-NRC DRAFT.doc	221250	
Copy of RAI-TR54-15 R3A-NRC DRAFT.doc	1812034	

Options
Priority: Standard
Return Notification: No
Reply Requested: No
Sensitivity: Normal
Expiration Date:
Recipients Received:

AP1000 TECHNICAL REPORT REVIEW

Response to Request For Additional Information (RAI)

RAI Response Number: RAI-TR54-026
Revision: 2A

Question:

What are the gaps and tolerances for each of the gaps between the fuel to cell wall, rack to rack, and rack to wall? What are the assumed initial locations of the various components (fuel assemblies and each rack) and what is the technical basis for this assumption. Were any studies done for different initial conditions (considering tolerances); if not, explain why. What requirements are in the DCD to ensure that the assumed gaps (considering tolerances) will always be maintained throughout the licensing period?

New Question: (Revision 2A)

During the June 2010 audit, the NRC requested that dimension and gap information for the spent fuel racks be clarified between the two similar RAIs (RAI-TR54-15, RAI-TR54-026) to show consistency and alignment to the current design basis shown in DCD Figure 9.1-2, 9.1-3, and 9.1-4.

Westinghouse Response: (Revision 0)

All gaps between fuel assemblies and cell walls, between racks, and between racks and pool walls are set to match the nominal gaps provided on the Westinghouse Drawing APP-FS02-V2-002 Revision 0 “Discrete Zone Two Region Spent Fuel Rack Pool Layout. The following table summarizes the gap information used in the dynamic analyses.

	Fuel-to-Cell Wall	Rack-to-Rack	Rack-to-Wall
Nominal Gap (inch)	(8.8”-8.1”)/2 = 0.35”	1” or 1.25”	North – 3.2” East – 2.75” South – 2.7” West – 3.2”

Fuel is assumed centrally located in cell. This is conservative since minimizing gap on one or two walls will generally produce a larger hydrodynamic coupling effect.

Numerical studies were done on other Holtec rack projects; the results generally showed a small influence on results. A larger influence occurs if the gaps are assumed to be displacement dependent, rather than always being held constant at their initial value. The neglect of this effect is conservative.

Once racks are installed, the “as-built” gaps are reconciled with the gaps initially used for analysis by evaluation of the numerical results and the predicted motions. Once the “as-builts” are accepted by evaluation of the current results, the only way the gaps would change over time would be by the action of a seismic event. Combined License applicants will have a procedure in place to address measurement of the post design-basis seismic event gaps, and to evaluate the acceptability of the configuration showing it is acceptable, or to take appropriate corrective actions. A statement will be added to both the Technical Report and DCD addressing the design-basis seismic event potential change in gaps between the spent fuel racks.

Response: (Revision 1)

During the August 6-7, 2009 meeting with the NRC it was identified that spent fuel rack A1 is shown to slide into the area of the spent fuel pool designated as the "Tool Storage Area". To eliminate this from happening, the Tool Storage Area has been resized from 34 inches wide with a 3.2 inch gap from the tool storage area to rack A1, to 33 inches wide with a 4.2 inch gap. This increase in gap size precludes rack A1 from entering the tool storage area as the result of a seismic event.

The DCD and TR Revision sections below have been updated accordingly to reflect this change.

Response (Revision 2A)

The figures (and related discussion) included in all of the previous revisions of this RAI response are out dated and are superseded as follows:

- The latest version of DCD Figure 9.1-4 is included in the response to RAI-SRP9.1.2-SEB1-06.
- The correct TR54 Figure 2-1 has been incorporated into the latest revision of TR54 (Reference 1).

Additionally, the fuel-to-cell wall gap is corrected as follows:

- Maximum (nominal) fuel-to-cell wall gap: (8.8"-8.404")/2 = 0.198".
- Minimum (nominal) fuel-to-cell wall gap: (8.8"-8.426)/2 = 0.187".

This data is consistent with the response to RAI-TR44-17, which communicates the equivalent information for the New Fuel Storage Rack.

The seismic analyses for both the New and Spent Fuel Storage Racks conservatively evaluate the maximum nominal fuel-to-cell wall gap.

Reference:

1. APP-GW-GLR-033, Revision 4, "Spent Fuel Storage Rack Structural/Seismic Analysis," (Technical Report Number 54)

<u>Design Control Document (DCD) Revision</u>: (Revision 0, 1)

(The Revision 0 response was incorporated into DCD R17.)

The markup of DCD Rev. 17 Figure 9.1-4 below shows the modification in the tool storage area size.

DCD Changes (Revision 2A)

The DCD changes provided in all of the previous revisions of this RAI response are out dated and are superseded by the DCD changes included in the response to RAI-SRP9.1.2-SEB1-06.

PRA Revision:
None.

Technical Report (TR) Revision: (Revision 0, 1)

(The Revision 0 response was incorporated into APP-GW-GLR-033 R1.)

The markup TR-54 Rev. 2 Figure 2-1 below shows the modification in the tool storage area size.

TR Changes (Revision 2)

The TR changes provided in all of the previous revisions of this RAI response are out dated and are superseded. The correct TR54 figure was incorporated into the latest revision of TR54 (Reference 1).

Markup of DCD Rev. 17 Figure 9.1-4:

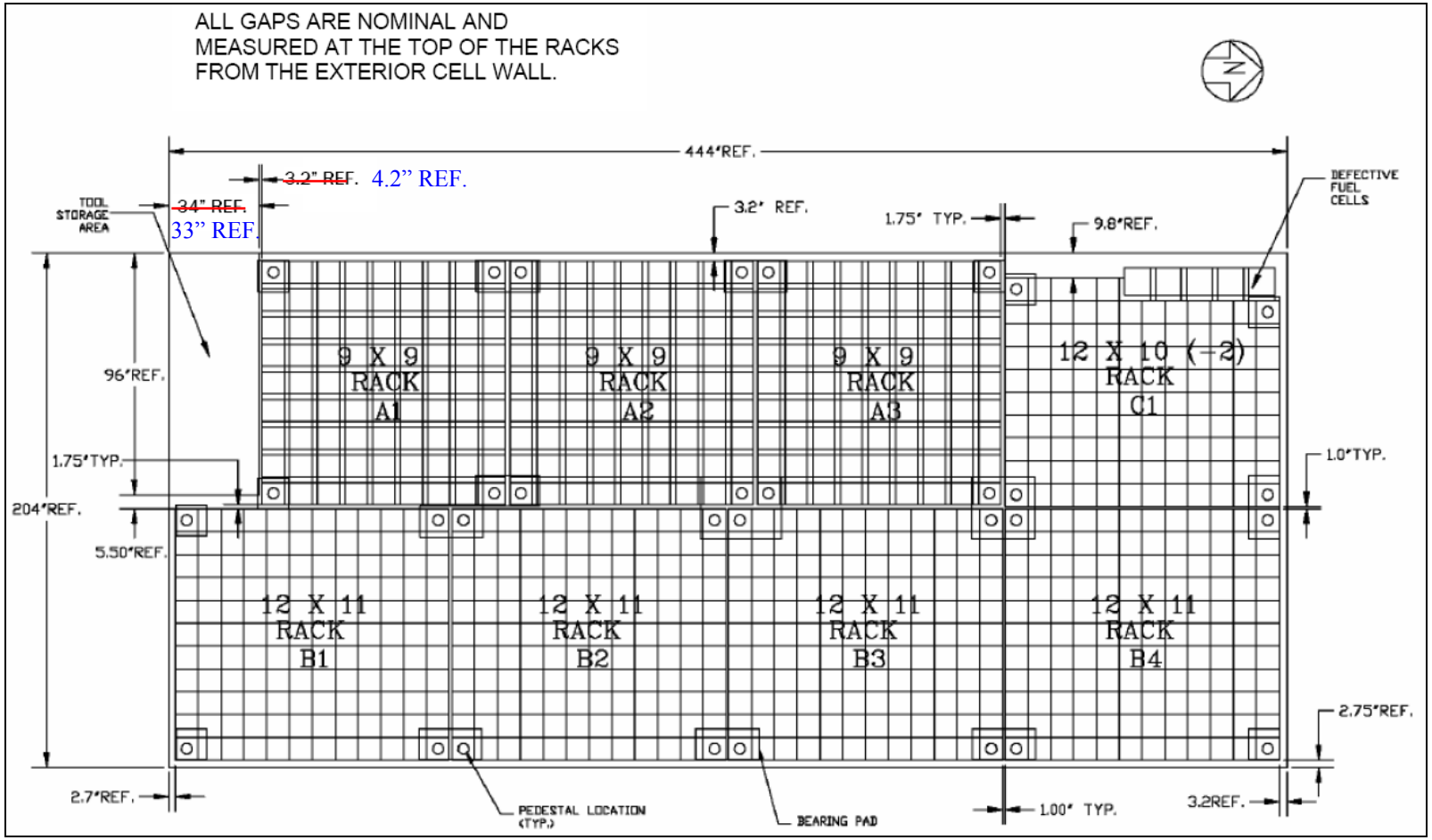

Markup of TR-54 Rev. 2 Figure 2-1:

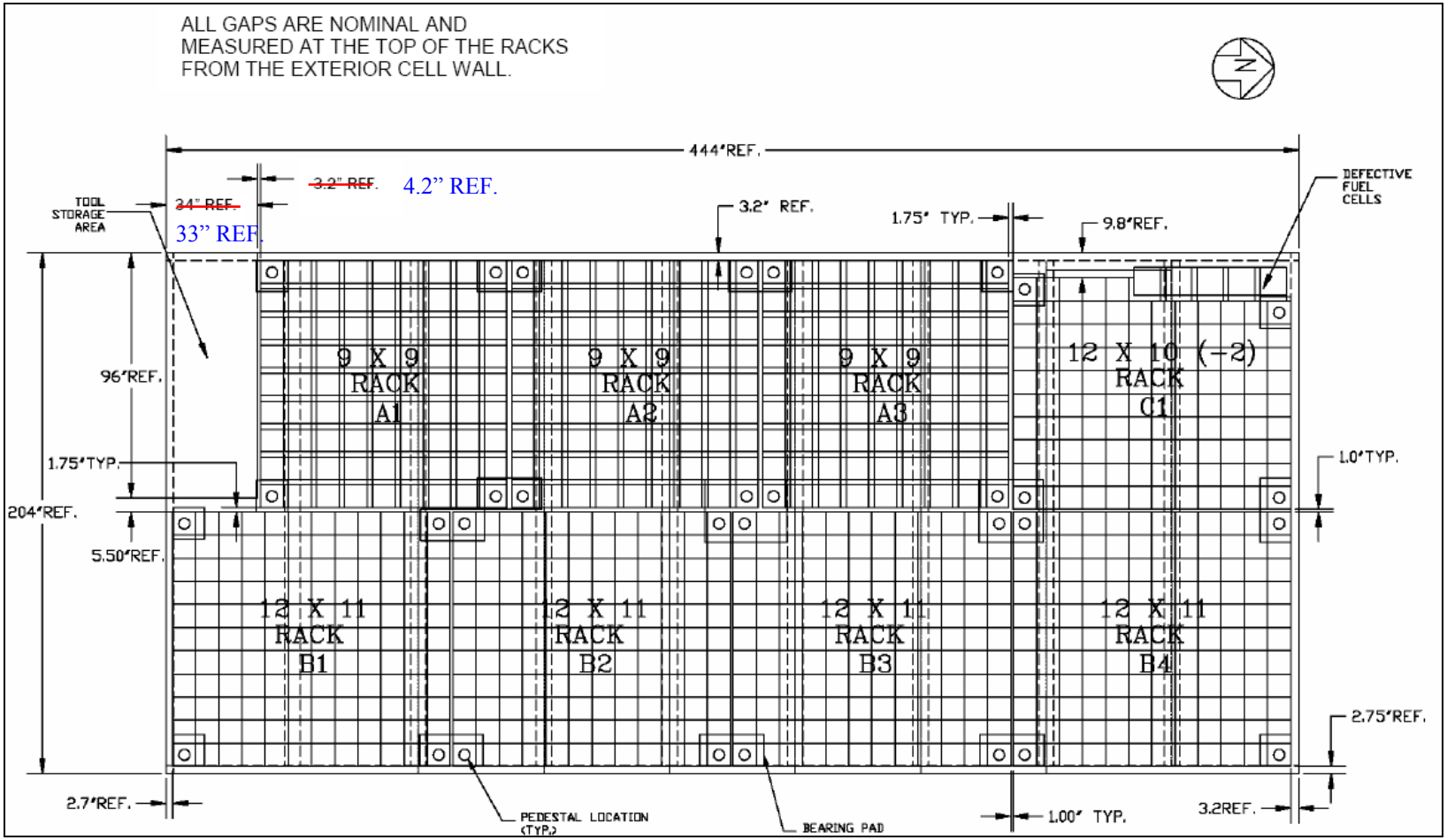

AP1000 TECHNICAL REPORT REVIEW

Response to Request For Additional Information (RAI)

RAI Response Number: RAI-TR54-015
Revision: 3A

Question: (Revision 0)

Insufficient descriptive information has been included in the spent fuel report to permit an adequate review of the structural/seismic analysis of the spent fuel racks. As indicated in SRP 3.8.4, App. D, provide descriptive information including plans and sections showing the spent fuel racks and pool walls, liner, and concrete walls. All of the major features of the racks including the cell walls, baseplate, pedestals, bearing pads, neutron absorber sheathing, any impact bars, welds connecting these parts, and any other elements in the load path of the racks should be shown on one or several sketches. These sketches should also indicate related information which includes key: cutouts, dimensions, material thicknesses, and gaps (fuel to cell, rack to rack, rack to walls, and rack to equipment area). In addition to the above, for review of postulated fuel handling drop accident and quantification of the drop parameters, sketches with sufficient details for the fuel handling system should be provided to facilitate the review as indicated in SRP 3.8.4, App. D.

October 8-12, 2007 Audit: (Revision 1)

Based on the original request made in the RAI, the review of the RAI response and the revised details in Section 9.1 of DCD Rev. 16, the following items still need to be provided or clarified in the TR and DCD:

(1) The key dimensions of the male and female pedestal components and bearing plates should be shown in the figures provided in the RAI response.

(2) The welds connecting the pedestals to the baseplate and the baseplate to the fuel cell walls are not shown. The information for the welds should indicate the type of the weld (e.g., fillet) and whether they are all around or the extent of the welds.

(3) Figure TR54-15.6 (in the RAI response) does not show any leak chase channels in the spent fuel pool floor. W indicated that there are leak chase channels; however they are not shown in rack layout figure. W confirmed that the fuel rack analyses did not consider the possible impact loading of a rack pedestal over the leak chase channel. Therefore, the staff request W to explain why the effects of the leak chase channel were not considered in the fuel rack analyses and the calculation that demonstrates the adequacy of the liner/concrete in the local region around the pedestal which is part of the TR report. Also, Figure TR54-15.6 which will be included in the TR should be revised to show the leak chase channels if they are used.

New Question: (Revision 2A)

During the June 2010 audit, the NRC requested that dimension and gap information for the spent fuel racks be clarified between the two similar RAIs (RAI-TR54-15, RAI-TR54-026) to show consistency and alignment to the current design basis shown in DCD Figure 9.1-2, 9.1-3, and 9.1-4.

Westinghouse Response: (Revision 0)

Westinghouse has provided sketches in the attachment to RAI TR54-15 response showing the major features of the racks and spent fuel pool. These sketches will be incorporated in Technical Report 54. Westinghouse has not finished the detailed design of fuel handling equipment and detailed sketches are not available at this time. However, the quantification of the drop parameters has been established in the DCD (both maximum drop weights and heights). The DCD drop heights are much greater than what is being designed for the fuel handling equipment. This is stated in the RAI-TR-54-1 response. During the NRC Structural/Seismic audit of April 16th, the complete design drawings of the spent and new fuel racks were available to the NRC for review. Holtec explained how the rack features were incorporated into the seismic/structural models.

October 8-12, 2007 Audit: (Revision 1)

Westinghouse has revised the layout figures for Region 1 and Region 2 spent fuel racks as requested. These figures are presented below in the DCD Revision and TR Revision sections below. Leak chases are used in the spent fuel pool. The plates making up the spent fuel pool liner have been designed such that no rack pedestals are over leak chases.

Westinghouse supplemental response to NRC Technical Review Meetings May 21 & May 22, 2008: (Revision 2)

Westinghouse agreed to change spent fuel pool rack layout shown in Figure 2-1 of TR-54 Rev 2 and DCD Figure 9.1-4 to change note to “All gaps are nominal and measured at the top of the rack from the exterior cell wall”. Also from RAI-TR54-36 Rev 2 response, the tool area is shown to be 34 inches rather than 36 inches. In addition, Figure 2-3 and DCD Figure 9.1-3 (sheet 1 of 2) have been changed to correctly reflect the distance from the TOP of the bearing pad (not the bottom of the bearing pad) to the top of the rack.

Response (Revision 2A)

The figures (and related discussion) included in all of the previous revisions of this RAI response are out dated and are superseded as follows:

- The latest versions of DCD Figures 9.1-2 (both sheets), 9.1-3 (both sheets), and 9.1-4 are included in the response to RAI-SRP9.1.2-SEB1-06.
- The correct TR54 figures are incorporated into the latest revision of TR54 (Reference 1).

Reference:

1. APP-GW-GLR-033, Revision 4, "Spent Fuel Storage Rack Structural/Seismic Analysis," (Technical Report Number 54)

Design Control Document (DCD) Revision: (Revision 0 and 1)

The spent fuel rack figures in section 9.1 of DCD revision 16 are replaced with the following figures:

Figure 9.1-2 (Sheet 1 of 2) Region 1 Spent Fuel Storage Rack Layout

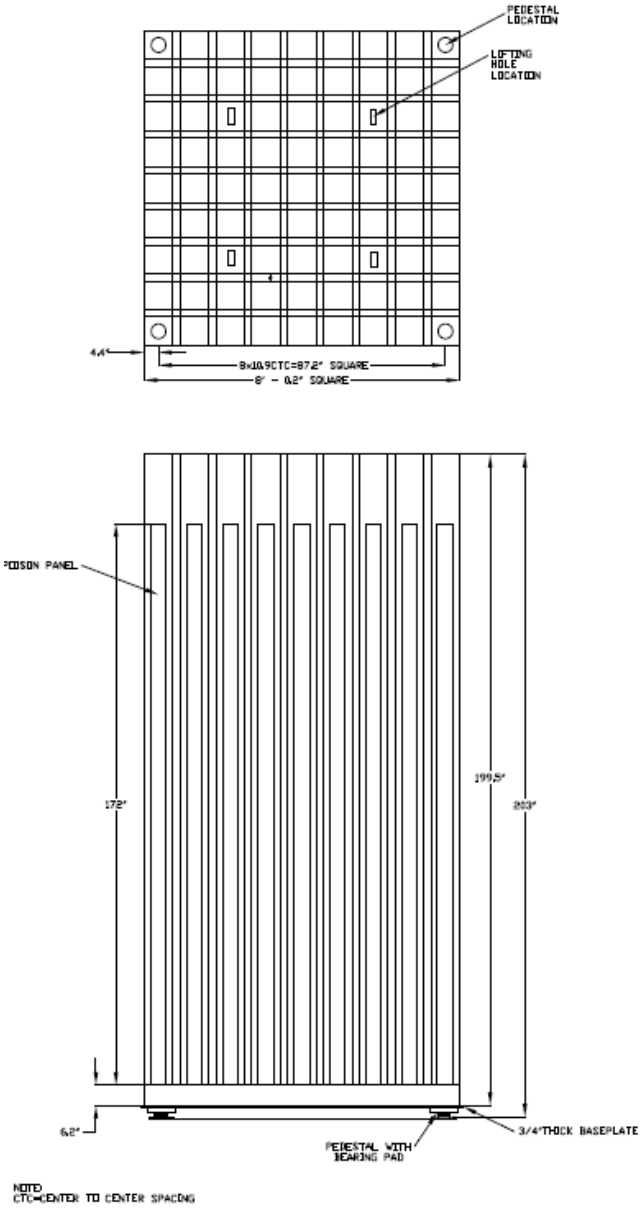
PEDESTAL LOCATION
LIFTING HOLE LOCATION
4.4"
8x10.9CTC=87.2" SQUARE
8' - 0.2" SQUARE
POISON PANEL
172"
199.5"
203"
6.2"
3/4"THICK BASEPLATE
PEDESTAL WITH BEARING PAD
NOTE:
CTC=CENTER TO CENTER SPACING

Figure 9.1-2 (Sheet 2 of 2) Region 1 Spent Fuel Storage Rack Cross Section

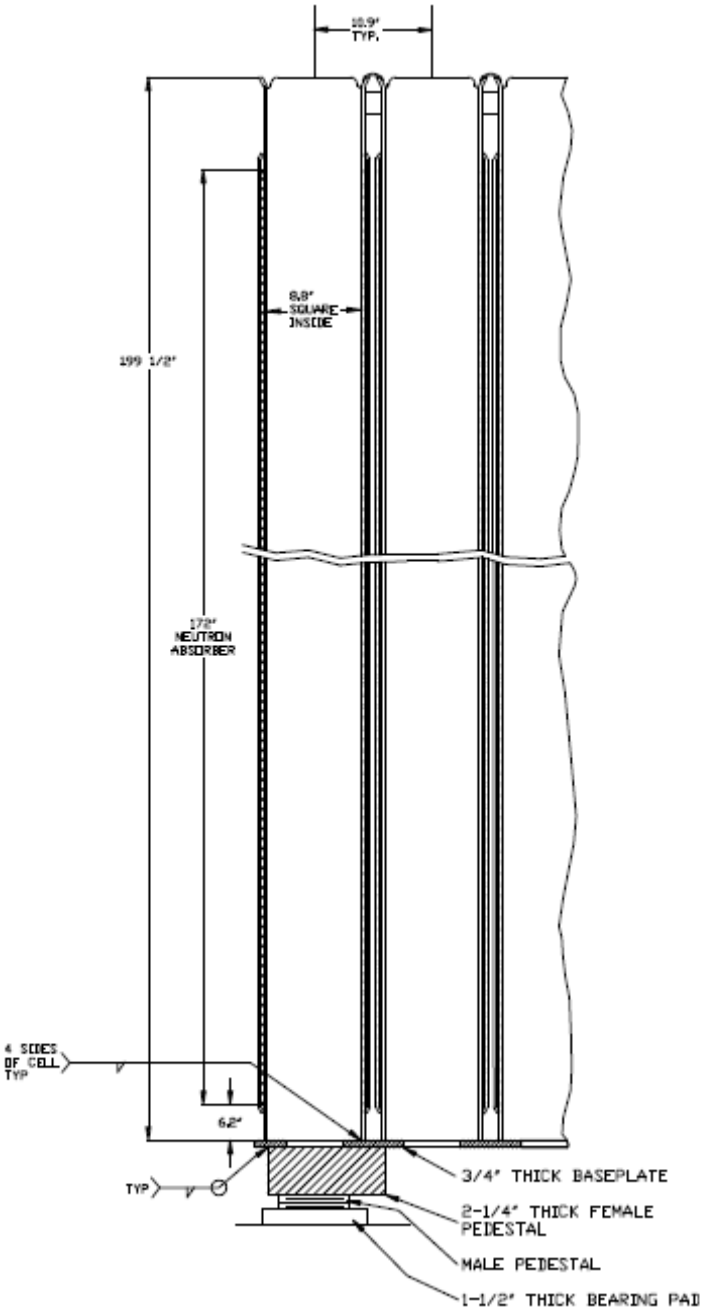

Figure 9.1-3 (Sheet 1 of 2) Region 2 Spent Fuel Storage Rack Layout

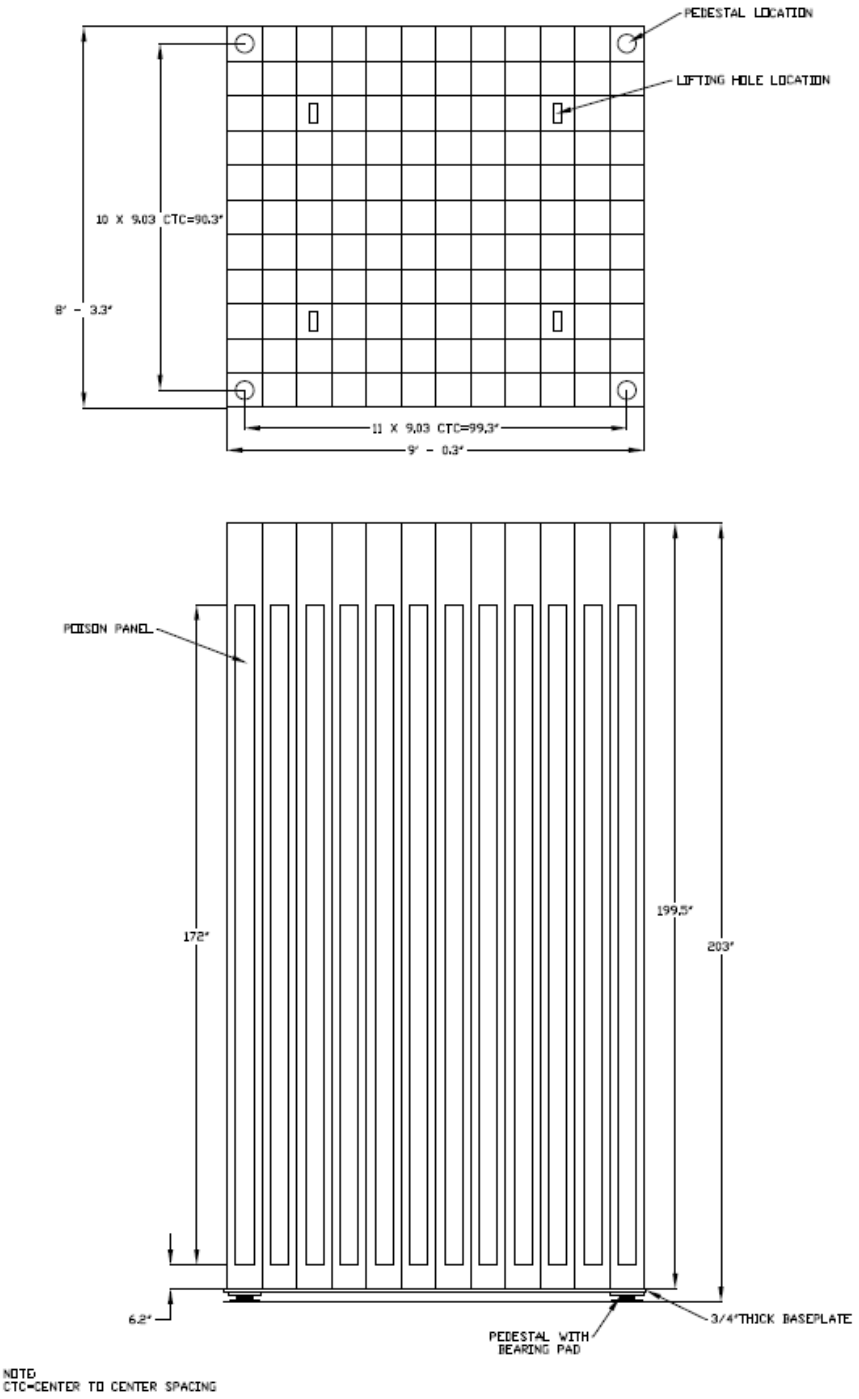

Figure 9.1-3 (Sheet 2 of 2) Region 2 Spent Fuel Storage Rack Cross Section

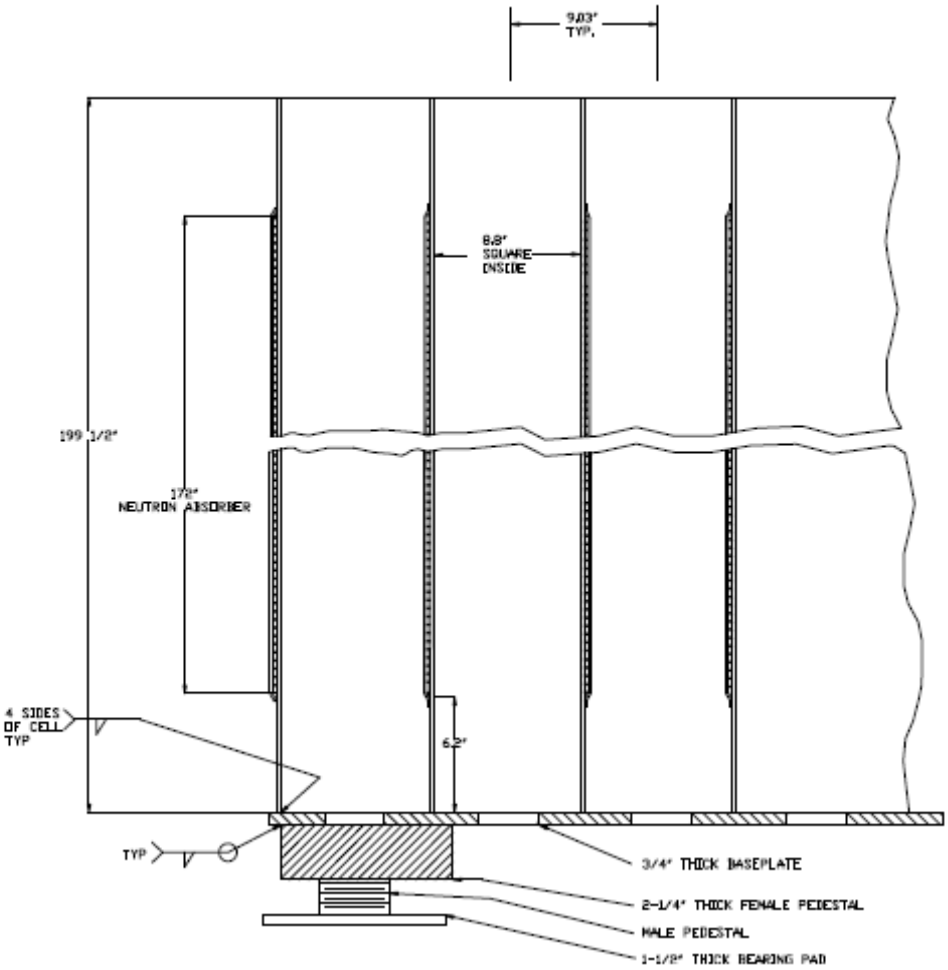

Figure 9.1-4 Spent Fuel Storage Pool Layout (889 Storage Locations)

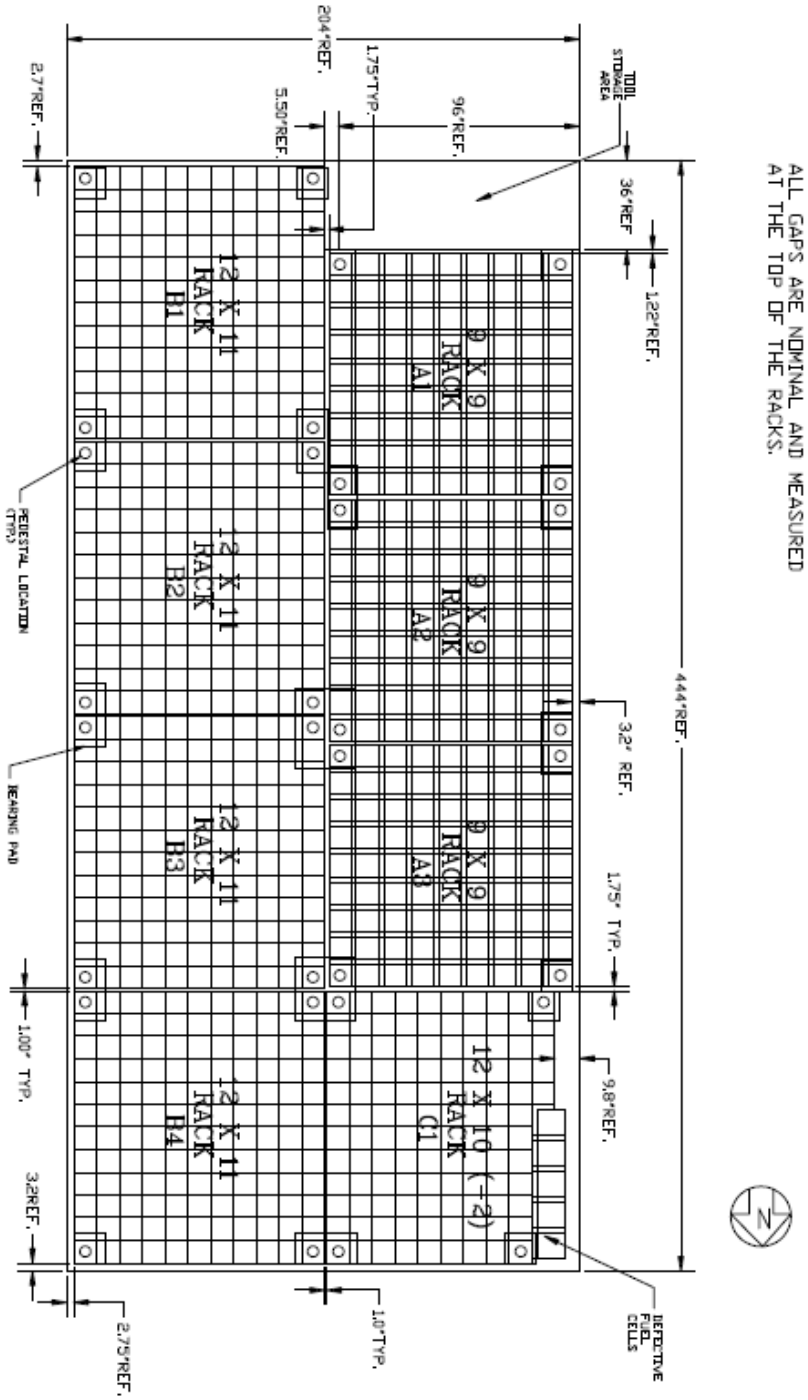

<u>DCD Revision from RAI-TR54-15</u>: (Revision 2)

Replace Figures 9.1-3 (Sheet 1 of 2) and 9.1-4 with the following:

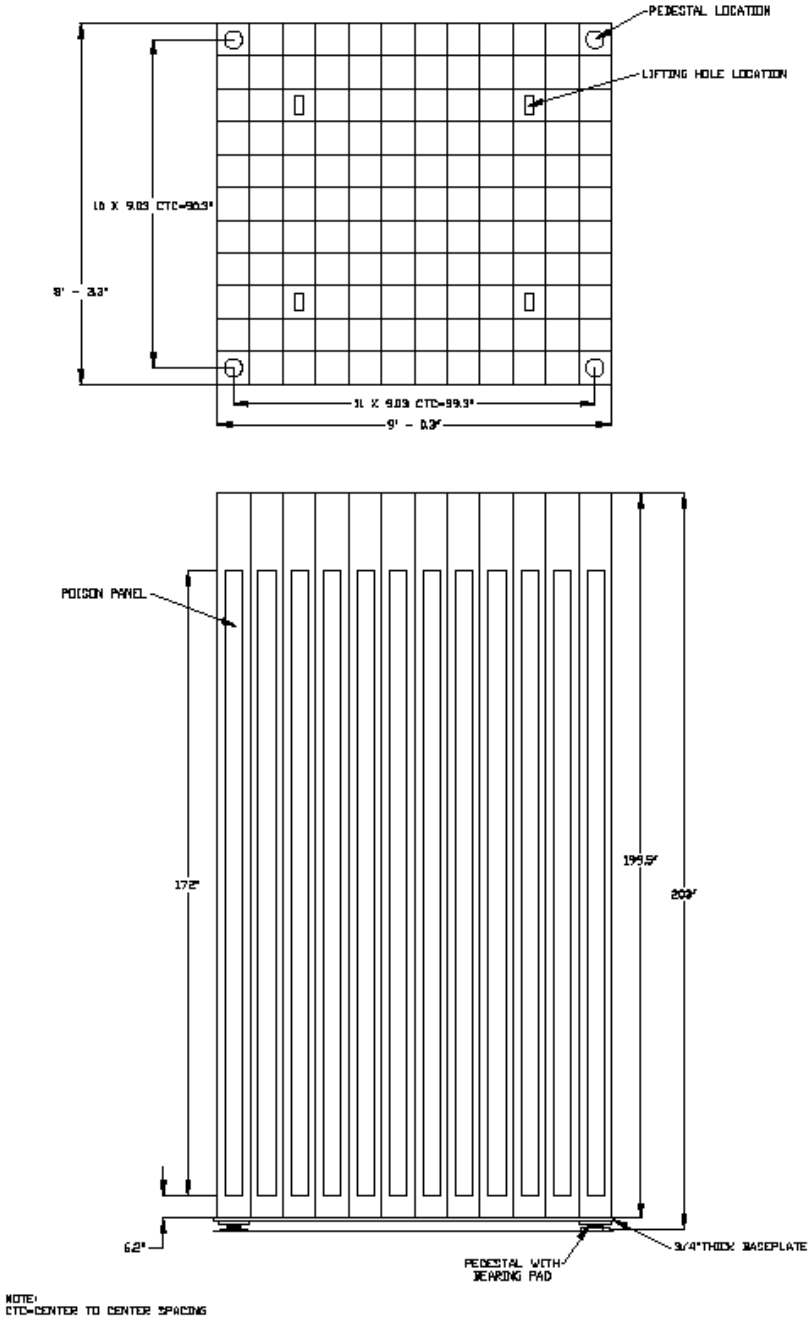

Figure 9.1-3 (Sheet 1 of 2) Region 2 Spent fuel Storage Rack Layout

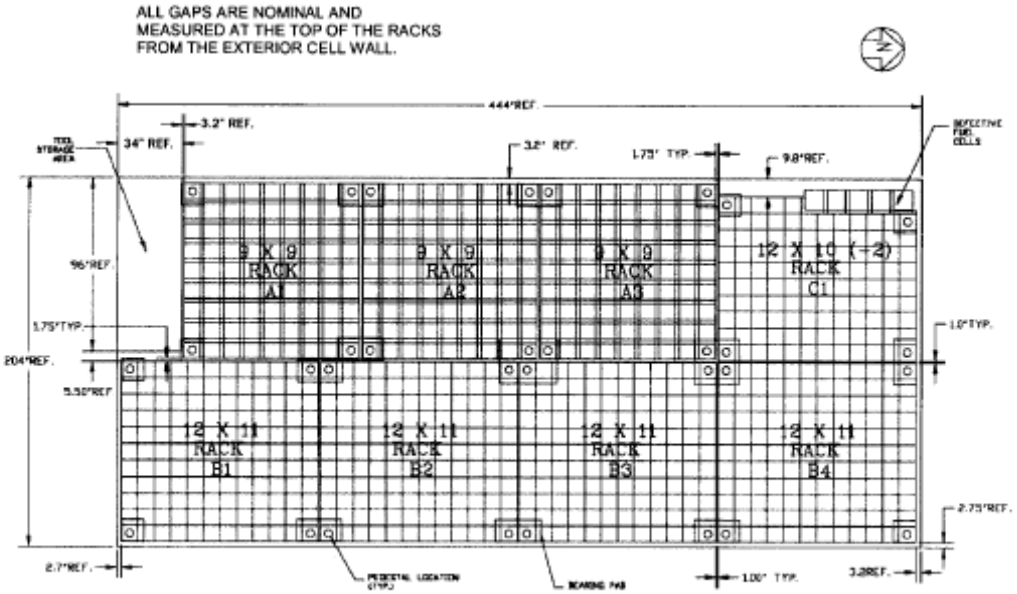

Figure 9.1-4 Spent Fuel Storage Pool Layout (889 Storage Locations)

DCD Changes (Revision 3)

The DCD changes provided in all of the previous revisions of this RAI response are out dated and are superseded by the DCD changes included in the response to RAI-SRP9.1.2-SEB1-06.

PRA Revision:

None

Technical Report (TR) Revision: (Revision 0 and 1)

The following Figures have been incorporated into Technical Report 54 Revision 1:

Figure 2-1 Spent Fuel Pool Storage Layout (889 Total Storage Locations)
Note: leak chases shown in phantom

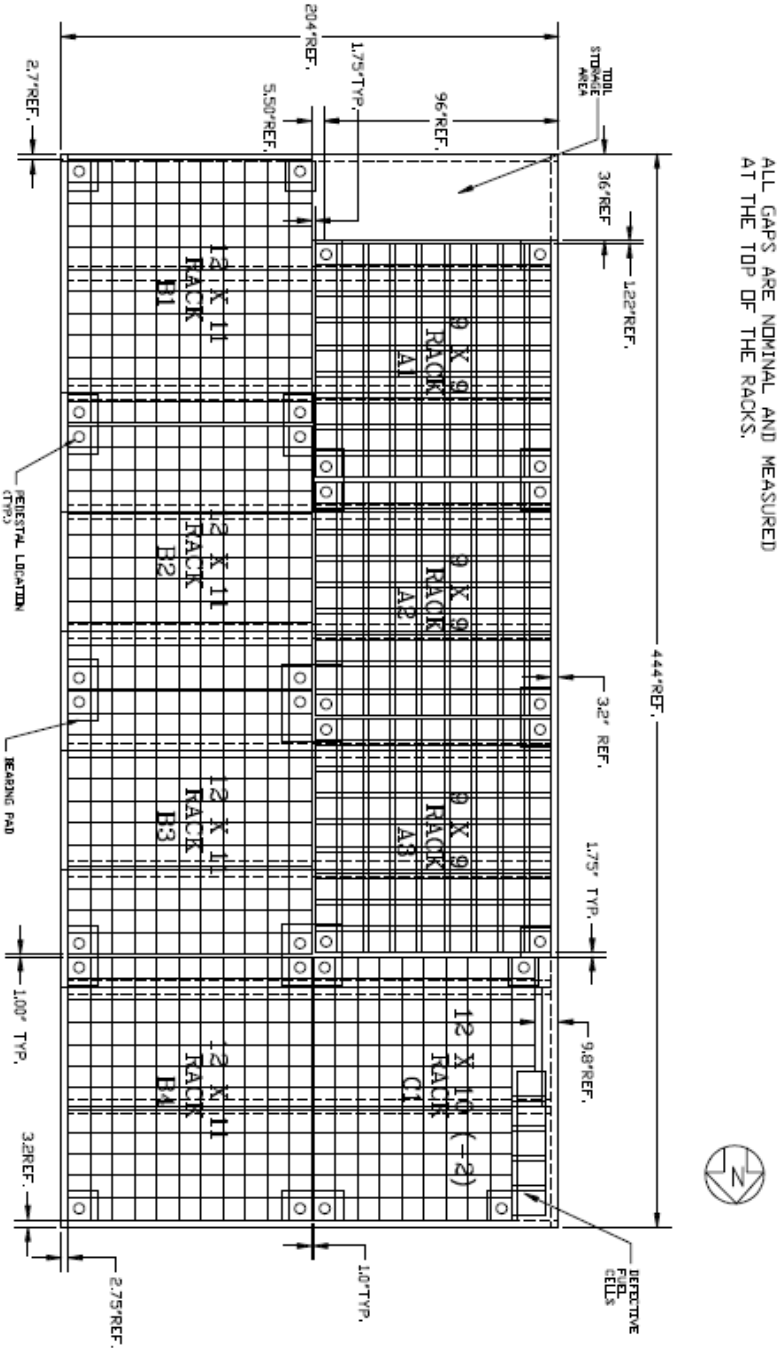

Figure 2-2 Configuration of a Region 1 Storage Cell (Sheet 1 of 2)

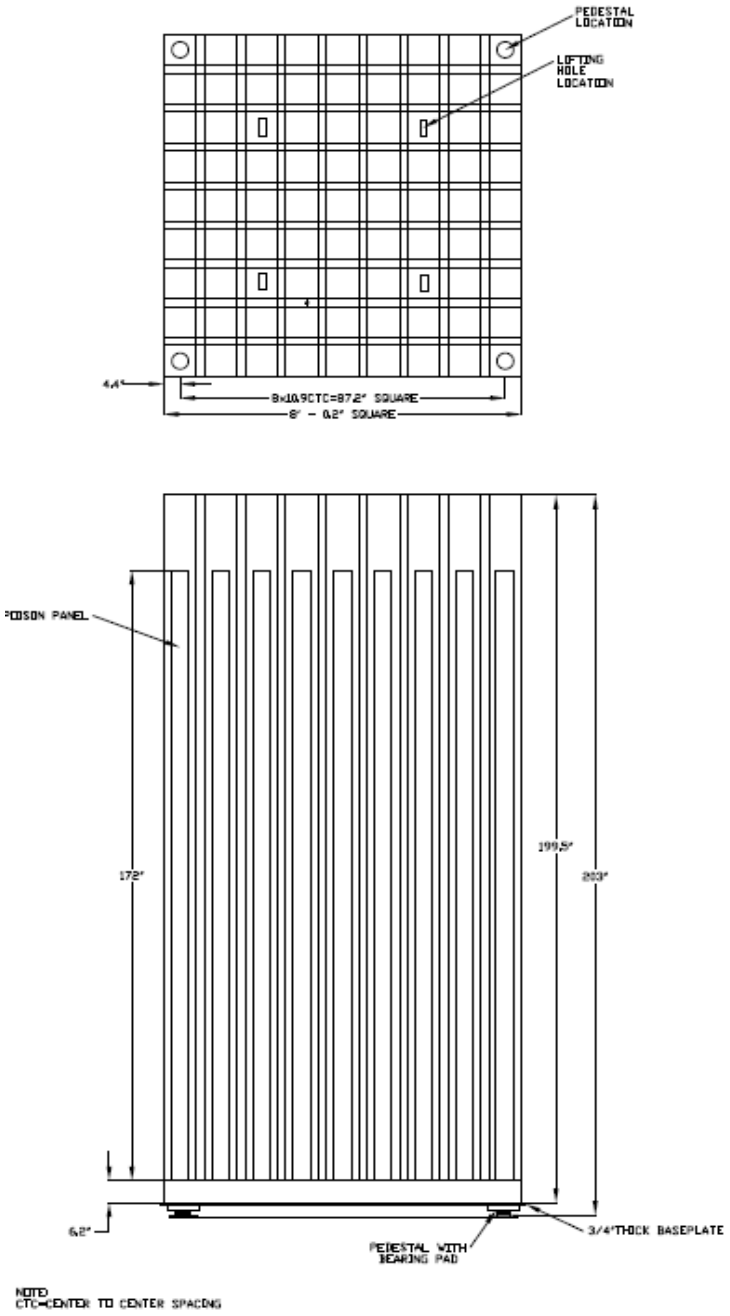

Figure 2-2 Configuration of a Region 1 Storage Cell (Sheet 2 of 2)

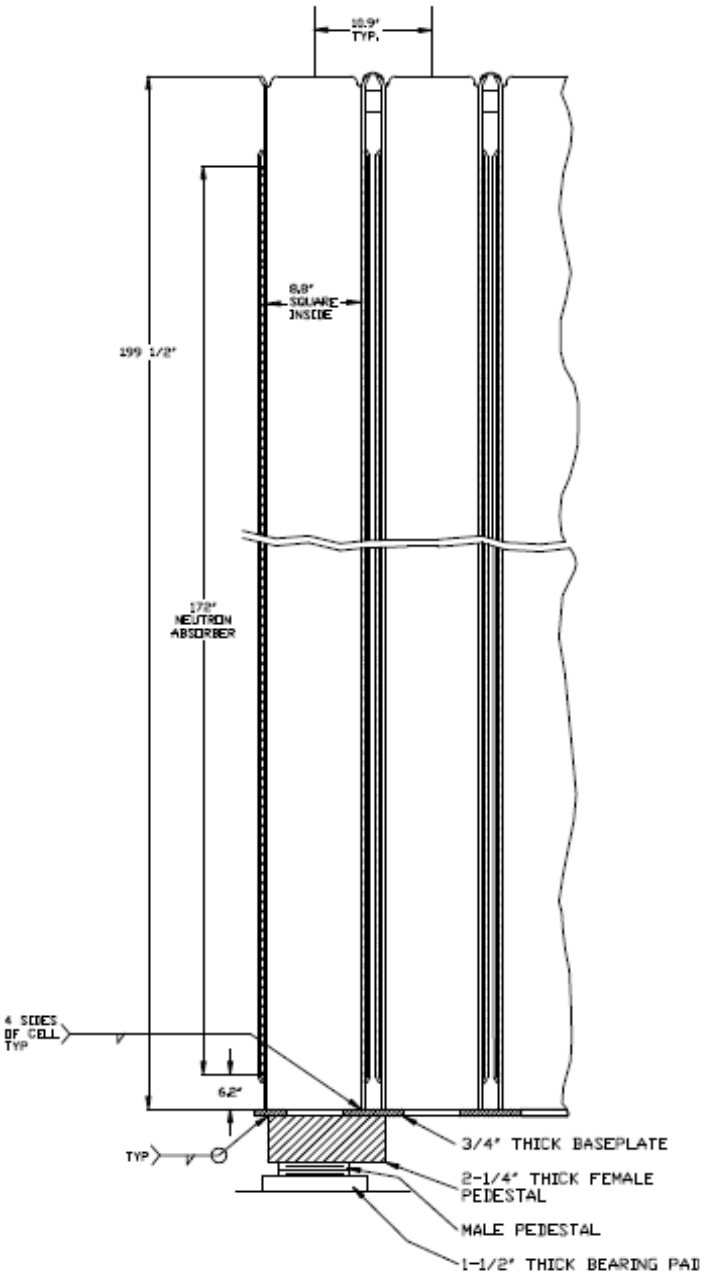

Figure 2-3 Configuration of a Region 2 Storage Cell (Sheet 1 of 2)

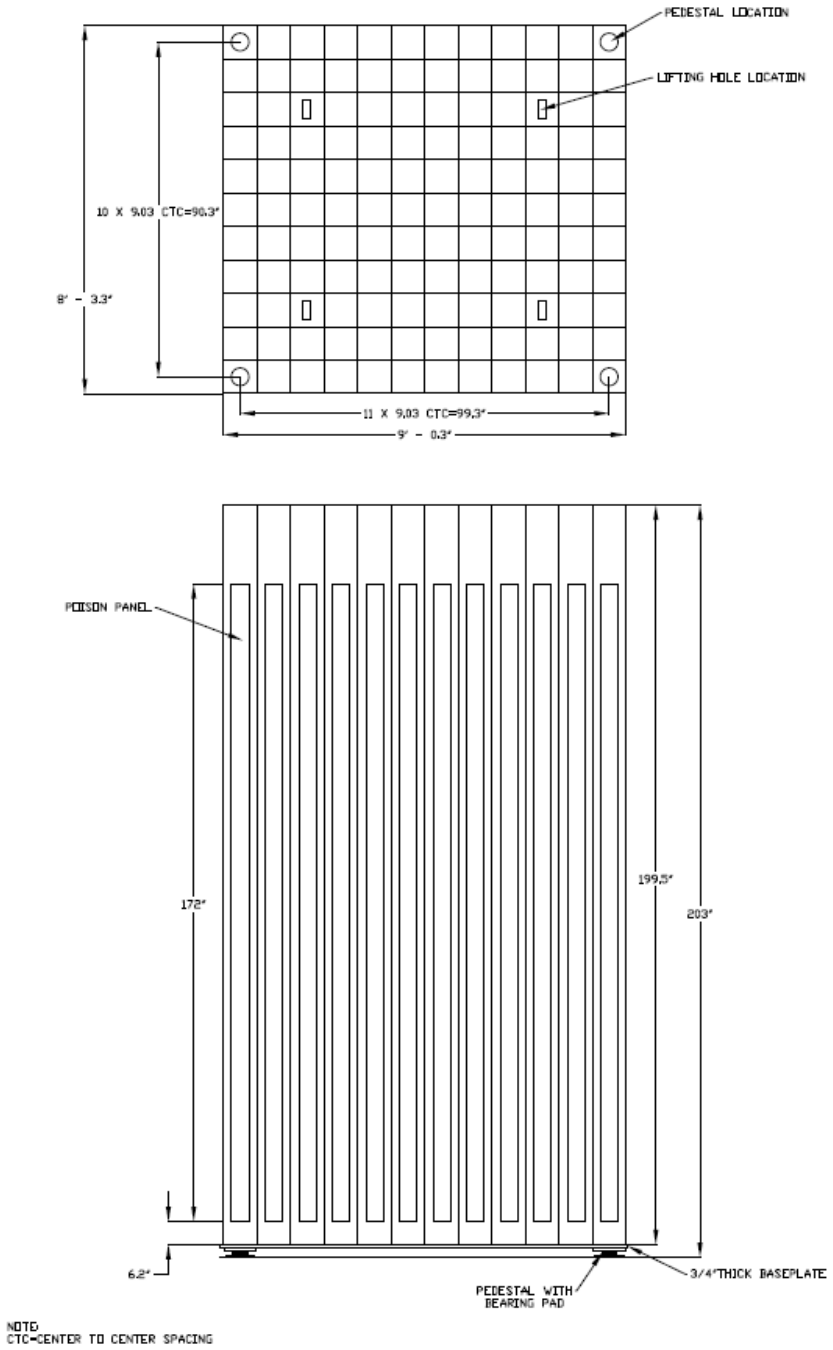

Figure 2-3 Configuration of a Region 2 Storage Cell (Sheet 2 of 2)

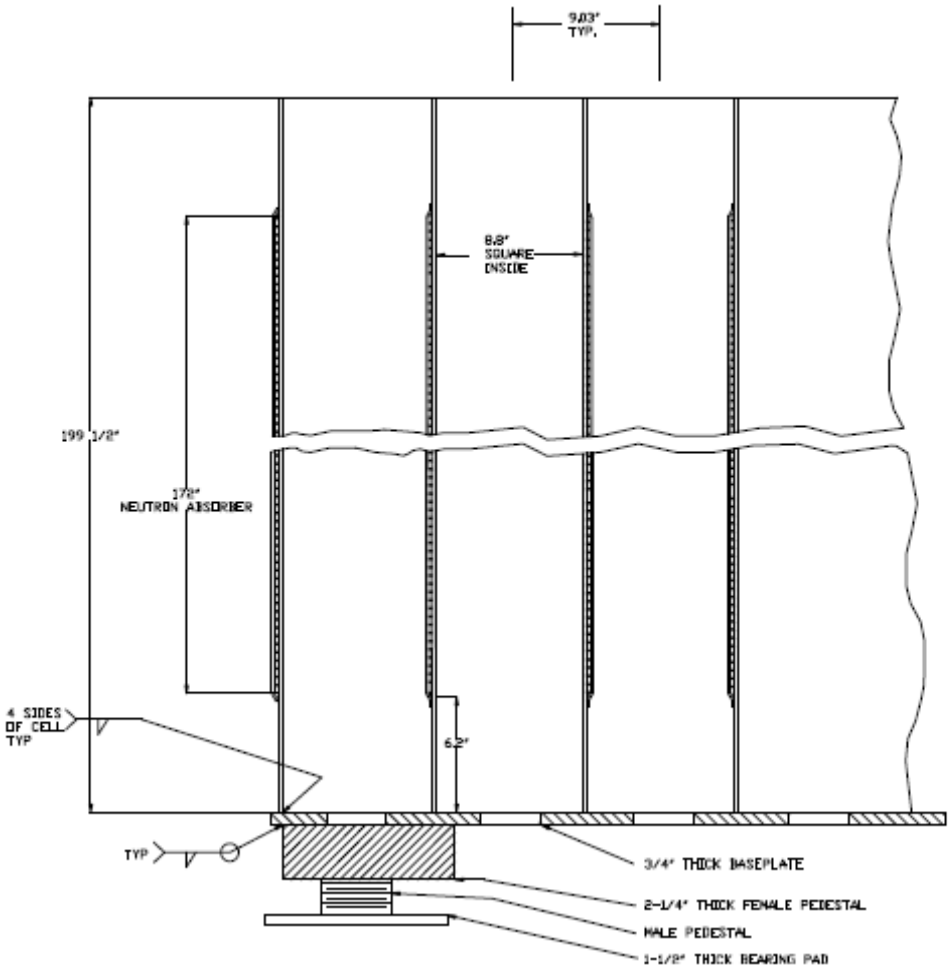

Technical Report Revision from RAI-TR54-15 Rev 2 response:

Figure 2-1 has been changed to reflect the requested added note All gaps are nominal and measured at the top of the rack from the exterior cell wall and the change in size of the tool storage area to accommodate rack movement during an earthquake.

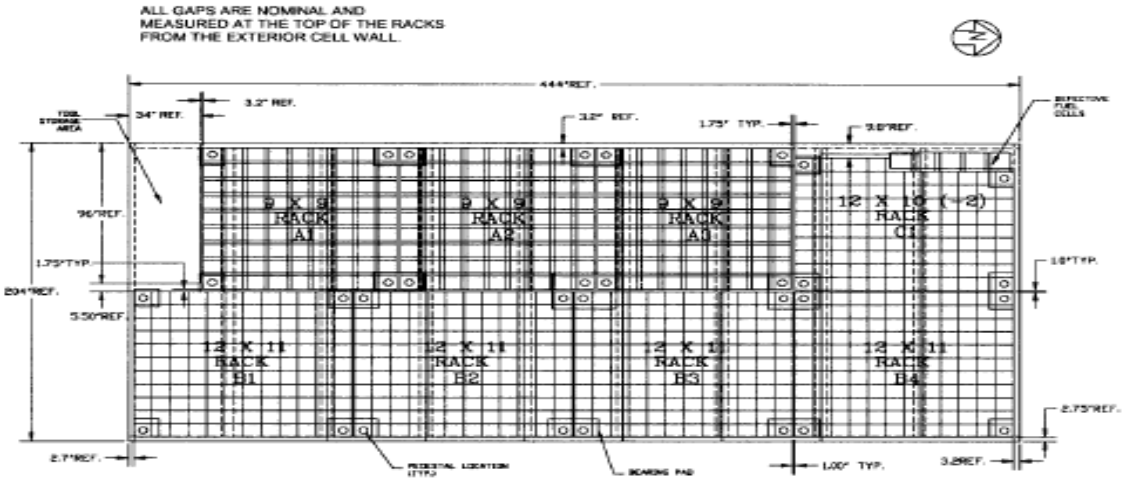

Figure 2-1 **Spent Fuel Pool Storage Layout (889 Total Storage Locations) – Leak Chases Show in Phantom**

Figure 2-3 (Sheet 1 of 2) has been changed to reflect the correct distance from the TOP of the bearing pad to the top of the rack

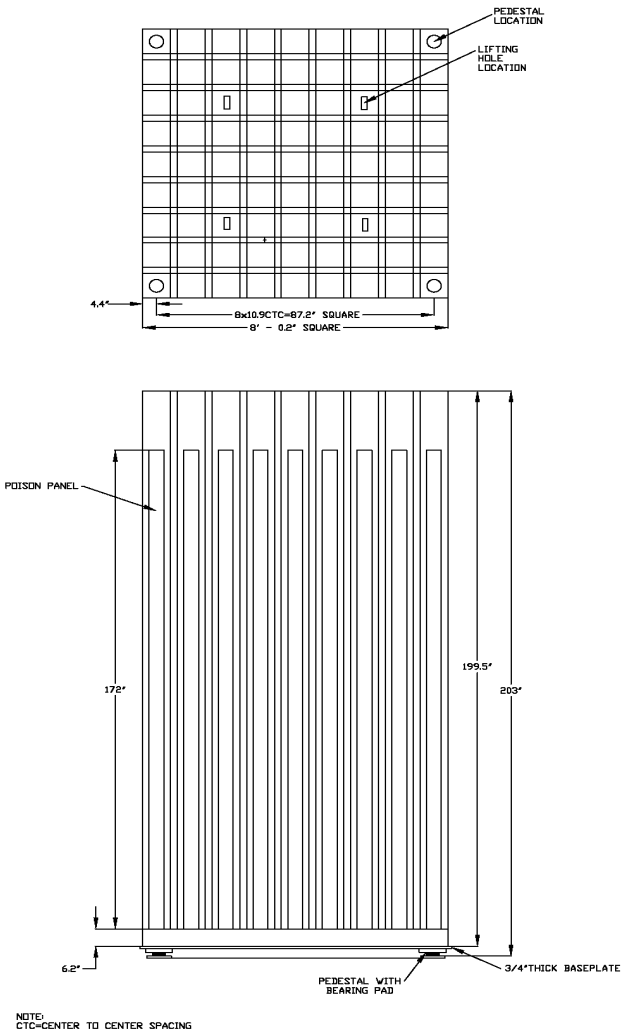

Figure 2-3 Configuration of a Region 2 Storage Cell (Sheet 1 of 2)

TR Changes (Revision 3)

The TR changes provided in all of the previous revisions of this RAI response are out dated and are superseded. The correct TR54 figures were incorporated into the latest revision of TR54 (Reference 1).