Official Transcript of Proceedings

NUCLEAR REGULATORY COMMISSION

Title: Advisory Committee on Reactor Safeguards
EPR Subcommittee

Docket Number: (n/a)

Location: Rockville, Maryland

Date: Friday, May 21, 2010

Work Order No.: NRC-263 Pages 1-130

NEAL R. GROSS AND CO., INC.
Court Reporters and Transcribers
1323 Rhode Island Avenue, N.W.
Washington, D.C. 20005
(202) 234-4433

DISCLAIMER

UNITED STATES NUCLEAR REGULATORY COMMISSION'S
ADVISORY COMMITTEE ON REACTOR SAFEGUARDS

The contents of this transcript of the proceeding of the United States Nuclear Regulatory Commission Advisory Committee on Reactor Safeguards, as reported herein, is a record of the discussions recorded at the meeting.

This transcript has not been reviewed, corrected, and edited, and it may contain inaccuracies.

UNITED STATES OF AMERICA

NUCLEAR REGULATORY COMMISSION

+ + + + +

ADVISORY COMMITTEE ON REACTOR SAFEGUARDS

(ACRS)

+ + + + +

EPR SUBCOMMITTEE

+ + + + +

FRIDAY

MAY 21, 2010

+ + + + +

ROCKVILLE, MARYLAND

+ + + + +

The Subcommittee convened at the Nuclear Regulatory Commission, Two White Flint North, Room T2B1, 11545 Rockville Pike, at 8:30 a.m., Dr. Dana Powers, Chairman, presiding.

SUBCOMMITTEE MEMBERS PRESENT:

DANA A. POWERS, Chairman

MICHAEL T. RYAN

WILLIAM J. SHACK

JOHN W. STETKAR

NRC STAFF PRESENT:

DEREK WIDMAYER, Cognizant Staff Engineer and Designated Federal Official

SURINDER ARORA

JASON CARNEAL

HANH PHAN

MALCOLM PATTERSON

DON DUBE

ALSO PRESENT:

GREG GIBSON

GENE HUGHES

JOSH REINERT

SANDRA SLOAN

VESNA DIMITRIJEVIC (via teleconference)

P-R-O-C-E-E-D-I-N-G-S

8:28 a.m.

CHAIRMAN POWERS: The meeting will now come to order. This is a meeting of the Advisory Committee on Reactor Safeguards, US EPR Subcommittee. I'm Dana Powers, chairman of the subcommittee.

ACRS members in attendance are Bill Shack, John Stetkar, Michael Ryan, and Derek Widmayer of the ACRS staff, is the designated federal official for the meeting.

The purpose of this meeting is to continue our review of the SER with Open Items for the combined for the Combined License Application submitted by UniStar Energy for the Calvert Cliffs Nuclear Power Plant Unit 3.

We will hear presentations to discuss Chapter 19 PRA and severe accident evaluation, and we will also continue our discussion on Chapter 19, the DCD SER with Open Items.

I would just like to pause and congratulate everyone at Calvert Cliffs for the wonderful things said about them in the recent Nuclear News, and their outstanding capacity factor that they've been able to maintain over the years. I'm sure you are all very proud and you deserve our

congratulations.

The subcommittee will hear presentations by and hold discussions with representatives of UniStar, AREVA NP and the NRC staff, and other interested persons regarding these matters.

The subcommittee will gather relevant information today and plan stake results of the review of this chapter, along with other chapters reviewed by the subcommittee, in other subcommittee meetings to the full committee, at a future full committee meeting.

And we might just discuss that. Well, let's not. We'll discuss that in June, I suspect, when we're going to bring all this together to the full committee meeting and round out some of these things, so that we can move to the next phase as quickly as we can on some of these chapters. Things are moving right along here.

The rules for participation in today's meeting have been announced as part of a notice of this meeting previously published in the Federal Register.

We have received no request from members of the public to speak at today's meeting.

But should anyone want to speak, all you

have to do is get my attention and we'll make time on the agenda for you to speak.

A transcript of the meeting is being kept and will be made available as stated in the Federal Register notice. Therefore we request that participants in this meeting use the microphones located throughout the meeting room in addressing the subcommittee.

The participants should first identify themselves, and speak with sufficient clarity and volume so they may be readily heard. Copies of the meeting agenda and handouts are available in the back of the meeting room.

We have also the infamous telephone bridgeline, which surprisingly, works very well. It has been established with the meeting room today, and I understand we'll have participants from UniStar and AREVA NP on the line at various times throughout the meeting.

So we request that participants on the bridgeline identify themselves when they speak, and to keep their telephone on mute during the times when they're just listening.

Do any of the members of the subcommittee have any opening comments they'd care to make?

I see no "burning issues" presented to us, so I will turn now to Surinder Arora, the NRO project mentor for a review of the Calvert Cliffs Unit 3 COL for some introductory comments.

MR. ARORA: Thank you, Dr. Powers. Good morning. My name is Surinder Arora and I'm the lead PM for Calvert Cliffs Nuclear Power Plant Unit 3 combined license application.

This is our third meeting with the subcommittee, and in the previous two meetings, we have presented a total of five FSAR chapters. They are SERs with Open Items. And in this meeting, we are going to be presenting Chapter 19 which is PRA, and Severe Accident Evaluations, the title of the chapter.

As done in the previous two meetings, I will give a brief overview of where we are in the review process for Calvert Cliffs combined license application in a couple of slides, and with that, we'll go to the slides.

My first slide is -- shows the public milestones for the six phases of the review process, and we have completed Phase I for all chapters, and currently, we are in Phases II, III and IV on various chapters.

This presentation is part of Phase III,

and this is the ACRS review plan. We have already completed chapters 8, 4, 5, 12, and 17, and group 3B-2, which only Chapter 19 is being presented today, which is the third line in this slide.

The last slide that I have is a generic open item. That is there because the review of the design certification application is being done concurrently with RCOLA application, and until that is done, this will remain an open item, and it will apply to all the chapters which use information from EPR DC, by reference.

CHAIRMAN POWERS: Now as I see it, we can take things to the full committee with this particular open item hanging out over everything else. And it's okay. I mean, I don't see that as causing a problem.

MR. ARORA: Yes. We are just counting this as a generic open item --

CHAIRMAN POWERS: Yes. I mean, it happens for every single one of them. We all know what -- everybody understands that things are condition upon this being eventually resolved, and so I see nothing -- I see no big roadblocks in moving ahead here.

MR. ARORA: And other specific open items are discussed --

CHAIRMAN POWERS: Yes.

MR. ARORA: -- and we present you the chapters. That's all I had today, in terms of the overview, and with that, I'll ask Mr. Gibson to start.

CHAIRMAN POWERS: And some time we need to sort out the schedule on the remaining chapters. I mean, you guys need to do it and then interface with us.

MR. ARORA: Sure.

CHAIRMAN POWERS: But it looks like we -- I mean, first of all, it looks like we're kind of on schedule, and it looks like we don't need to dally too much here, and we can maybe gain some time on the schedule. Because I'm sure Chapter 3 will occupy your attention for a while.

Mr. Gibson.

MR. GIBSON: Thank you. John Rucki will be coming over to get the slides. My name is Greg Gibson. I'm a vice president of regulatory affairs for UniStar. This is the fourth time we've been before ACRS, and Dr. Powers, would you like me to give my background again, or --

CHAIRMAN POWERS: We're getting to know you, Greg. Let's go ahead.

MR. GIBSON: Very good. I appreciate that. I'm here for Chapter 19 --

MEMBER SHACK: We remember the background of anybody who left San Onofre to go --

(Laughter.)

CHAIRMAN POWERS: Hey, if you look at the capacity factors, he left, and look what happened to San Onofre.

MEMBER STETKAR: And he probably left at an appropriate time to make actually some money in the California housing market.

MR. GIBSON: It did collapse right after I left. Okay. Chapter 19, PRA. John, do you want to go to the first slide. As we've done for each of these chapters, we have of course tried to maximize the use of incorporate by reference from the AREVA design certification.

So for our presentation, and throughout our effort, we are going to focus on what are the differences that are site-specific, or what are the open items that we specifically have that differ from that. The rest of it would of course be discussed by AREVA, and I know you've had discussions on Chapter 19 already, and this afternoon's session will also be involved with some feedback from Dr. Stetkar.

John, next slide.

We have today Gene here, who is the acting

director of PRA for UniStar, and he's going to be assisted by Josh Reinert, who is with AREVA and made the AREVA presentation on Chapter 19. Next slide, John.

And with that, I'd like to turn over to Gene, who will be discussing all aspects of Chapter 19 for us.

MR. HUGHES: Okay. Let me start by introducing myself, and then I'll ask Josh to make a few words about himself, so we're both in the record. As I call on him, it won't disrupt the conversation with his introduction.

I am Gene Hughes. I'm the acting director of PRA for UniStar. My career in risk assessment began in the '70s with General Electric. I reviewed the inputs to and treatment of the BWR. I left and joined SAI, which later became SAIC, as the utility director, utility services manager, and led the PRA for Limerick, other PRA applications, subsequently formed Erin Engineering managed it for 23 years, left it, and subsequently formed Etranco, a company devoted to primarily development and support of new-build reactor PRA activities, but also engaged in PRA support, both in the U.S. and Japan and France, and with UniStar.

And if Josh can take a moment and introduce himself, we'll have the introductions primarily out of the way.

MR. REINERT: I'm Joshua Reinert from AREVA. I started off in the nuclear Navy as a reactor operator and engineering watch supervisor. I received a bachelor's in electrical engineering from the University of Connecticut. Then I went to MIT and studied under George Apostolakis. I received a master's with a these in --including uncertainty and risk-informed decision making. I went to a company based down the street called Information Systems Laboratories where I did PRA contract work for the Offices of Research and Nuclear Material Safety and Safeguards.

And then I have been at AREVA for three years working on the EPR projects the whole time, and I've been the lead of the COLA EPR projects since about late 2007. That's it.

MR. HUGHES: The format for the presentation that I prepared for today is shown on the agenda chart. I thought I would start off with the PRA itself, which you have seen, go through a quick reminder of the update treatment during construction, then leading to the longer term, the plans for it, and

then go into departures and site-specific features and exemptions, and go through those, and then take it sort of one by one with internal events, seismic margin, external flooding, and the other items on the agenda, which I think is a logical way to go through it.

I think the NRC, in their presentation, may go through the open items and the issues that have been addressed. So I think these will dovetail nicely, but I thought this would be a good way to structure this presentation.

To begin, the US EPR FSAR Chapter 19 is incorporated by reference, and what that means for us is the PRA that's described in the US EPR FSAR is indeed the Calvert Cliffs 3 COLA PRA.

We've gone through and looked at the site-specific features, and those are bounded, and I will go through those one by one, and in addition, we've looked at external events and confirmed, in our mind, that they can be screened out, and have provided that information to the NRC, so that they are in fact screened.

And I'll go through each of those, or at least the significant ones, in enough detail to allow you to probe that and ask questions as you would like.

You can go to the next slide.

This slide is a repeat from the Chapter 19 of the US EPR. I wanted to put it up because it includes the heading, Calvert Cliffs 3 COLA PRA, and since we have incorporated it by reference, this is in fact our PRA, and I thought it would be wise just to roll through these slides and remind you of what you've seen in the past, and the fact that it does apply to Calvert Cliffs per the application and the FSAR that we've submitted.

This is for the internal events and dominated by loss of offsite power. It includes fire, it's fairly straightforward, and I think you've seen it before. So I'll go to the next slide.

This looks at shutdown events. The core damage frequency from shutdown events is about 10 percent of that from internal events. Just to remind you, the internal event number is 5.8 times -- or 5.3 times ten to the minus seven per year, and the number here is 5.8 times ten to the minus eight. Go to the next one.

This looks at the large release frequency, which is on the order of 10 percent, slightly less, and again, this is directly from the Calvert Cliffs PRA. It's from the US EPR FSAR PRA. It is the same

as that which you've seen before. Go to the next.

This slide transitions to another slide, or a variation of one that you have also seen in the past. We were here, a few weeks ago, talking about Chapter 17, and in that chapter we talked about the Design Reliability Assurance Program.

I wanted to use this similar slide from that, to point out that the PRA as we have it today, at the DC stage and the COLA, our PRA is one that reflects the initial design. The design is not complete in all respects.

We've looked at the design comparison between the plant that we have at Calvert Cliffs and that which is described in the design certification application, and there are very few departures, or differences, and we will describe those in a moment.

The PRA is described as being used during the construction process for a few key areas. These include alternative evaluations in support of the design effort, looking at procedures as they're developed, technical specification inputs, and of course the Design Reliability Assurance Program which we describe and that supports procurement.

In addition to those types of applications, there are other, what we would call

applications of the PRA that are more detailed. 10 CFR 50.69, tech spec enhancement, using the type of approach that South Texas has adopted. And we have not committed to those. So those are not described in the FSAR or in the commitment. Those are shown on this slide as potentials, off to the right, after fuel load, and those types of things may be considered and there may be discussion of those. But those are not in the application that we've provided.

MEMBER STETKAR: So Gene, in practice for the COL stage, the only -- I hate to call it an application but for lack of a better term -- the only application of the PRA is indeed to support the population of the Reliability Assurance Program list; is that correct?

MR. HUGHES: There are actually two uses. That's one. The other is to use the PRA in support of SAMDA.

MEMBER STETKAR: Oh, okay. Great. Thank you.

MR. HUGHES: Next slide. There are seven departures and eight exemptions identified on this slide. If you compare this to the latest submittal, the numbers are slightly different. There are five departures and six exemptions described, but this

reflects ongoing discussions with RAIs and updates the number to the current number, and I'm going to go through them for you now.

Looking at the departures, the first is the maximum differential settlement across the basemat, which is a structural issue not in the PRA, and so that has no impact on what we're doing. The second and third deal with atmospheric dispersion, and these are for deterministic calculations, and for these deterministic calculations you're looking at the dose in a particular direction with a chi over q type calculation.

In the PRA, we don't use that sort of approach. In the SAMDA, which is where this would come up, we use the windrows for the facility, we use the population, and so this also does not affect the SAMDA.

For consistency with this discussion, the SAMDA is described in the Environmental Report and we did not plan to go into that today.

The fourth item here is the toxic gas detection and isolation. This is the system that deals with ammonia, with chlorine detection, isolation of the control room, and as you'll see when we get into the external events description, we have a basis

on which to remove that system. We do not need it for Calvert Cliffs Unit 3. Next slide.

The fifth is the soil shear wave velocity, and this is one in which the nuclear island meets the US EPR shear wave design velocity of a 1,000 feet per second minimum.

What we've done is look at the site-specific features and the site-specific buildings, and the ESW building and the EPG building, emergency power generation building, have soil that's slightly different. But we've looked at this from a deterministic defense-in-depth approach, and identified a limit that would be consistent with the structural design capability associated with a 1,000 feet per second in the original design certification application, and have high confidence that there will not be a design problem for these structures.

In the case of the ESW building, the best estimate is above a thousand, but we've identified, since it was close, that it could be as low as 720, with no problem from a deterministic perspective.

Likewise for the emergency power generation building, the best estimate is actually below one thousand, but we've looked at what it could be to achieve the type of structural strength that we

need, and it could be as low as 630 feet per second.

So we have high confidence from a design perspective, that there's not a problem, and those types of discussions will occur in the meetings and discussions of the detailed structural design.

The SMA of course relies upon the soil-structure interaction with the facility, and the NRC has identified an item for us to continue to look at. We believe there is no problem but we continue to have it under investigation and we will be providing additional information on that. Next slide.

Looking at the in-structure response spectra, the Calvert Cliffs 3 in-service -- there are more acronyms in this particular item than I'm used to doing. So Josh be ready, and correct me when I step aside here.

MR. REINERT: Okay.

MR. HUGHES: The issue is the in-structure response spectra is -- we look at Calvert Cliffs 3, and there's a small exceedance at the low-frequency end when you overlay the curves. It's -- from 10 feet away it's imperceptible. But there is an exceedance that's identified.

We looked at the Seismic Margin Assessment and it's based upon the ground-motion response

spectra, and the ground-motion response spectra is, in fact, bounded by the EPR SSE approach.

And so there's no impact on the SMA when we look at it in terms of that. But there is a design issue that resulted in this being a departure and that's being treated in the seismic side.

Did I do okay, Josh?

MR. REINERT: That's fine.

MR. HUGHES: And all of those acronyms are in the last slide. So I don't think I made any new territory. The seventh is the normal power supply system, the 480 volt, the 6.9 kV cooling tower fans.

The cooling tower fans are unique to the cooling tower. The cooling tower has some attributes that impact what the size of the fans should be.

It's my understanding that the total horsepower is not changed but the actual fan size, in dealing with procurement, moved it from 480 volt to 6.9 kV. The number of fans was shifted from something 52 to 46 or 48, I forget the exact number.

It's not a significant departure from a PRA perspective and it's primarily to accommodate procurement of these items.

MEMBER STETKAR: Perhaps the number and horsepower of fans isn't but you actually have

reconfigured the 6.9 kV and 480 volt electric power configuration, to some extent. You've added some 480 volt motor control centers in the ultimate heat sink makeup water building, that didn't exist in the certified design.

You've reconfigured some of the baseloads on a 6.9 kV system. You've added a new supply to support the switchyard loads, out in the switchyard, which could affect offsite power recovery probability some.

I'm curious why the electric power system model in the PRA doesn't need to be revised to account for those changes.

MR. HUGHES: I'm going to go into the electric power model in just a few minutes --

MEMBER STETKAR: Okay. No problem.

MR. HUGHES: -- and this will give Josh time to help me develop a best response to what is a pending question; if you will hold off.

MEMBER STETKAR: Sorry. I'll wait. Thanks.

MR. HUGHES: Please go ahead, John. Looking at the exemptions, I put in italics the exemptions that are the same as the departures. The reasons for these being exemptions is once the design

certification application is approved, then it will become something that will be have to be taken exemption with. So these are the same. The items that are shown here, that are different, include the fitness for duty program, which is a scheduling issue, that can't really be done yet, and it's not in the PRA. The use of advanced zirconium alloy fuel rod.

We looked at the MAAP analysis deck and there's nothing in the advanced alloy fuel rod that would impact that. So with consistent severe accident assessments, we've identified nothing that would deviate as a result of this. So it's not PRA-impacting. And the general technical specifications and bases is a scheduling issue and it really can't be done yet.

So these items are exemptions but they are things that don't have a significant impact on the PRA.

MEMBER STETKAR: Let me interrupt you for a second here. Regarding the tech specs, you're adopting the tech specs that are in the DCD PRA verbatim; right?

MR. HUGHES: Yes.

MEMBER STETKAR: Okay. And those tech specs allow you -- I don't remember what it was -- I

think it's 120 days, basically, for -- the way they're written, they basically allow you to take each division out of service for 120 days, and there are allowances for I think 72 hours, that you can have two pieces of equipment in the same division out of service simultaneously, not necessarily for planned maintenance, but it could be corrective maintenance in conjunction with planned maintenance.

Have you thought, at all, how Calvert Cliffs is actually going to organize their preventive maintenance programs within the context of the PRA? Well, the PRA and the technical specifications. Because that can have an effect on the PRA.

MR. HUGHES: Are you asking whether or not there will be maintenance performed with the plant at-power?

MEMBER STETKAR: Yes. I am.

MR. HUGHES: I'm certain there will be maintenance performed with the plant at-power.

MEMBER STETKAR: Preventive main -- planned preventive maintenance?

MR. HUGHES: Yes.

MEMBER STETKAR: Do you have any notion yet -- does Calvert Cliffs have any notion yet, how that might be performed? For example, I'm familiar

with many plants in Europe that have similar four-train designs, that perform the preventive, scheduled preventive maintenance on-line, in a type of rolling divisional program, if I can call it that. In other words, they do, they take all equipment on Division 1 out of service, do all the preventive maintenance on Division 1, return it to service, do it for Division 2, do it for Division 3, do it for Division 4.

So they find it useful to do it that way for both scheduling and configuration control in the plant, so that they basically know what's out of service at the same time.

Do you have any idea whether Calvert Cliffs plans to do a similar type of maintenance?

MR. HUGHES: I think -- I would think it's premature to be able to answer that. I think the direct answer would be we've not addressed that yet. I would observe, just independent of the Calvert Cliffs evaluation, that many plants in the U.S. have A weeks, B weeks. They do that type of approach and so it's fairly common.

MEMBER STETKAR: Yes.

MR. HUGHES: So I would be expecting that it would probably be common here, but the truthful answer is --

MEMBER STETKAR: Yes.

MR. HUGHES: -- we haven't gotten there yet.

MEMBER STETKAR: You haven't thought that far. Okay. Thank you.

MR. HUGHES: Looking at the --well, next. Going through the site-specific features, the ultimate heat sink makeup water system has adequate capacity for 72 hours, plus makeup, to achieve the longer period. It's not significantly different. In fact it's not different at all from that that's included in the design certification. But it is a site-specific feature.

The Circulating Water System has been evaluated, it's been looked at from the standpoint of causing a trip, and from the standpoint of providing support, should one be required, and the treatment in the design certification PRA, the US EPR PRA is bounding.

The Raw Water System includes the essential service water makeup supply, is not in the PRA, and there's no recovery credit for that, so it's no impact.

The sewage water treatment is not in the PRA. T he security access facility and warehouses are

not in the PRA. There is a central gas distribution system which is called the system, but is in fact where gaseous quantities are available to be provided to the station, and we've looked at that under external events.

It is not located near the structures that we would be concerned about, and I'll discuss that further under external events in a moment. We've looked at potable and sanitary water system and they're not in the PRA.

MEMBER STETKAR: The central gas distribution system -- I'm assuming that pipes hydrogen out to the turbine building and out to the volume control tank. Does the internal fire part of the risk assessment account for things like hydrogen explosions in the turbine building?

That's a generic question, obviously, because, you know, where the precise pipes are routed, you know, when you finally build the turbine building, is going to be different.

MR. HUGHES: Yes.

MEMBER STETKAR: But I was just curious whether, since you mentioned the gas distribution system --

MR. HUGHES: It's an interesting question

and I'm actually -- my mind is going to NUREG-6850 and what's done with fire PRAs, and I don't recall vast treatment of pipe failure leading to that sort of thing.

MEMBER STETKAR: Well, it doesn't necessarily have to be a pipe failure.

MR. HUGHES: It could be of some purpose --

MEMBER STETKAR: When I worked at Zion, I had a melted spot on my hardhat, where I tried to put out a fire by quenching it just because we had a little hydrogen leak on a seal oil unit. So it doesn't have to be a pipe break.

MR. HUGHES: Yes. Josh, do you recall if that was looked at?

MR. REINERT: I don't remember if that specifically is included in the fire PRA area. I know we did -- I know we initially used a research, an NRC research document to come up with turbine building fire frequencies, and later, we did some sensitivity studies using -- I think it's NUREG-6850. So I would think that --

MEMBER STETKAR: It would be more in terms of the consequence of the fire rather than -- you know, it's probably rolled up in the frequency. Its

consequences -- that's all right. I was just curious. Go on. I don't want to hold up the time.

MR. HUGHES: Okay. Go to the next one. Fire suppression systems are credited in the turbine building. The credit in the turbine building is -- the turbine building is in fact for fire treatment treated broadly as a single area and it is credited. The RCPs are also relying upon fire suppression and they also have oil collection capabilities, should there be an oil leak for the reactor coolant pumps.

This treatment is in the Design Certification PRA, the US EPR PRA and is basically the same.

The Fire Water Supply System is included in the flooding PRA, only credited to support fire suppression systems in the fire PRA in the US EPR PRA. So these are also included and are consistent.

We looked at site-specific features: turbine building, the switchgear building, grid systems control building, duct banks, the switchyard and while these are site-specific, the treatment of them in terms of equipment and the items inside them is consistent between the Design Certification PRA and the PRA for the COLA Applications. Next slide.

This chart is to begin a discussion of

loss of offsite power. I will acknowledge going in that this chart has more detail in it than I'm prepared to address in the presentation. I believe you had a meeting recently on Chapter 8, and this was discussed in substantial detail there.

So I put this chart in just to remind you of that discussion as we go into the way we looked at loss of offsite power.

The US EPR FSAR has a conceptual switchyard design and the breaker-and-a-half scheme -- and this gets at the question that you asked, Dr. Stetkar, or it will open the opportunity to continue the dialogue.

The FSAR has a conceptual switchyard design, it uses a breaker-and-a-half scheme that's been adopted in the COLA so there's no change from that approach and from that general design.

The capability for runback and supply of house loads from the main generator, the Island Mode, is adopted by the Calvert Cliffs Unit 3 plant and is incorporated in the PRA so the treatment is consistent.

There is a site-specific transformer added to support plume abatement, wastewater treatment, desalination and we believe the impact of that is

minimal. Next slide.

The key features of the switchyard. The switchyard is incorporated based upon a qualitative evaluation. There is a very detailed FMEA in the FSAR for it and it's been reviewed in great detail.

What we looked at, from the standpoint of the PRA, was a qualitative review. The design uses a approach that is considered to be among the better to the best, with the number of breakers and the way that it has itself configured. It allows maximum flexibility with no single failure causing loss of offsite power.

Any single component can be out of service and it doesn't disrupt connections. The capability for runback and supply, called the Island Mode, is representative of a feature that can prevent reactor trip in cases and thereby reduce the challenges for the nuclear plant to go through a response and shut down.

Restoration of power can rely on one of two breakers. Each breaker has one coil in each and we recognize that this was a question asked earlier and so you can restore by going in either of two directions, which gives you access to two coils, one in each of two different breakers.

The batteries are in two divisions. They are monitored. The detailed design of the batteries in that part of the switchyard is not available, so the short answer is there is not a detailed PRA analysis of the switchyard. There's a review of the features. There's consistency between the Design Certification or US EPR PRA and the switchyard as it's described for the plant and based on that, we have concluded that it is in fact representative of and bounded by the US EPR PRA.

This looks at the numbers, and this is a chart that I adopted from the NRC's SER, and I would give them credit for this chart. We were about to create this chart and we realized we were duplicating something someone else had done, so I would thank them for it.

It breaks this chart -- or the chart breaks the loss of offsite power category into plant-centered, switchyard-centered, grid-related and weather-related causes of loss of offsite power.

The second column looks at the NUREG/CR-6890 generic value. The third column is the EPR value and then the next two columns look at what the Calvert Cliffs Unit 1 and 2 would be, and what Calvert Cliffs Unit 3 has chosen to be representative of the plant.

CHAIRMAN POWERS: And I can't resist commenting that there's not a little -- not even a hint of an indication of the uncertainties on these calculated values.

MR. HUGHES: That's absolutely correct and is true of almost every value --

CHAIRMAN POWERS: Everywhere --

MR. HUGHES: Everywhere it occurs.

CHAIRMAN POWERS: And more's the pity.

MR. HUGHES: I must comment because I agree with you. The comment I would make is we all know that the uncertainty is a critical and important thing. Uncertainty is treated in the PRAs, but when we report the results and we look at what we provide for regulatory applications, we all too often identify the central value or the mean and I think it's unfortunate. We could certainly add uncertainties to these and we could expand it but the reality is most of the limits or most of the things that people look for is this number and I would agree with you that it is a preoccupation with a single number. I notice that we've been joined by some people that are involved in the metrics issue and that, too, tends to address this thing in this way.

And it's a challenge we have to make sure

we carry the uncertainty into the way it should actually be treated.

MEMBER STETKAR: Gene, I don't know whether this is the appropriate time or perhaps later, when we discuss the design PRA. I must admit, I was surprised when I saw this table in the staff summary of the SER. I was glad to see it and I talked to the AREVA PRA people. I asked them specifically whether or not the PRA includes credit for the load rejection capability of the power plant and they told me specifically that, no, it doesn't, and now I've learned that it does, at least in the loss of offsite power because that's one of the things I wanted to look into, but I didn't because I was told that the PRA doesn't include credit for that.

So now that I know that it includes credit for the load-rejection capability for loss of offsite power, my question is, does it include credit for the load-rejection capability for any other initiating event. I want an answer, yes or no on the record, please.

MR. HUGHES: Let me turn to Josh. I could answer it but I want to make sure it's the correct answer.

MR. REINERT: The answer is no, I just

can't think of any other --

MEMBER STETKAR: Well, be careful because you're on the record now. When I asked people off the record, I got that same answer, no and that was obviously not correct, off the record, so I would like the correct answer on the record.

MR. HUGHES: Okay. Let me give you a brief answer. What we see here in the grid-related column is where we have taken credit for the load-rejection being treated with the .32 factor. The .32 factor is taken from the URD of EPR--

MEMBER STETKAR: Gene, if I had a chance -- I'm sorry, I'm just going to cut you off. If I had a chance to look at it, I would have gained some confidence about what was done and perhaps where the values came from. I didn't get a chance to do that because I was told, no, the PRA doesn't include credit for that. So I didn't have a -- and I don't care, right now, where the numbers come from.

MR. HUGHES: The important thing is, in order to accurately answer your yes-or-no question, I think the appropriate thing for Josh and I to do is to, either during a break or while I'm here, perhaps Josh can look it up, or someone can help us get the value for the .68 --

MEMBER STETKAR: I don't care about the number. I care about whether any numerical credit was taken anywhere. Anywhere. I don't care what number was used. If it was non-1, I care about if it was used and where it was used.

MR. HUGHES: The one place --

MEMBER STETKAR: Obviously, it was used here.

MR. HUGHES: Obviously, it was used here and I believe the answer to your question includes what's included in the .68 that was adopted from the Utility Requirements Document and I believe that it is only the loss of offsite power in this treatment. But I would like to confirm that by looking up that value, to make certain that that is in fact what is in that .68 value. But that value is --

MEMBER STETKAR: I'm not quite sure why the .68 is relevant because the 68 percent of the time that a loss of offsite power event does not result in a plant trip is a non-event. So I'm not quite sure what that 68 percent of the time applies to anything as far as any other initiating event in the plant, like a generator trip, or, you know, things like that.

So I'm not quite sure why the number is relevant to whether or not credit has been taken for

any other initiating event.

MR. HUGHES: We will confirm before the presentation is completed that this is the only place the .68 is applied.

MR. REINERT: Yes. This is the only place. We took credit for load-rejection on grid-related LOOP, and we did take credit for that in grid-related LOOP, and we did not take credit for load-reduction anywhere else in the--

MEMBER STETKAR: Interesting that you took credit for grid-related LOOP and -- because the plant knows that it's grid-related and not switchyard-related?

MR. REINERT: No.

MEMBER STETKAR: Okay. It knows that it's grid-related and not weather-related?

MR. REINERT: No.

MEMBER STETKAR: Okay. The plant probably doesn't know that it's grid-related. The grid-related happens to be the largest number, so you took credit to reduce the largest number.

MR. REINERT: Well, we had reason to take credit for it in several types of LOOPs, but there was an argument not to take credit for it in the LOOPs non-regulated, so --

MEMBER STETKAR: Because the plant knows that it's a weather-related loss of offsite power.

MR. REINERT: So we conservatively did not take credit for it in the non-grid-related LOOPs. We couldn't think of any reason not to take credit for it for grid-related LOOPs, so that's why we did.

MEMBER STETKAR: Why was only the switchyard-centered, the other large number here, modified for consequential loss of offsite power, which is a rather difficult and site-specific issue to get your hands around and you've reduced the switchyard-centered frequency by about 38 or 40 percent?

MR. HUGHES: The reason for that is the way that the systems are modeled and the event trees are modeled. The consequential loss of offsite power is treated but it's not treated as this initiating event. It's treated as a --

MEMBER STETKAR: That's correct, and most PRAs, indeed, use the frequencies in the left-hand column for their initiating event frequency. Some PRAs indeed do take credit for the plant runback features, and if you have reasonable data to support -- I'm not arguing that it's unreasonable to account for that.

I'm arguing that I was told that it didn't.

If you're going to take credit for it, it's not clear why you wouldn't take credit for it across the board.

On the other hand, when people take credit for that runback feature, they typically will take credit for it across the board. Many, many people today do indeed model consequential loss of offsite power but I'd never seen anyone reduce the loss of offsite power initiating event frequency the way you've done to account for that.

I wasn't aware of this either when I went through the review. I tended not to look at the numbers.

MR. HUGHES: Let me ask Josh to expand upon the answer, but my understanding is those particular consequential loss of offsite power events are treated as part of and a branch of the events for which they occurred.

So if you have a turbine trip and you have consequential loss of offsite power, then you lose the offsite power support and you stay in the turbine trip. Is that correct, Josh?

MR. REINERT: That's right.

MEMBER STETKAR: That is true. The

models do indeed explicitly account for consequential losses of offsite power. The plant trips and then the grid goes away. It's not clear what fraction of the initiating event frequencies, losses of offsite power events and NUREG/CR-6890, are attributable to that particular phenomenon.

MR. REINERT: I think I can explain better, or just related to this consequential-LOOP issue. The reason why it's all taken out of this switchyard-centered is -- it's a table in the NUREG-6890, where it lists all the LOOPs that have happened and how many were in each type of -- or in each LOOP category. In all of the consequential LOOPs, there were three out of, I think, 13 switchyard-related LOOPs. So all of the consequential LOOPs that make up the LOOP frequency were all considered to be switchyard-related.

MEMBER STETKAR: Can you give me that table number? I need to think.

MR. REINERT: I'll have to look it up. I'll give it to you.

MEMBER STETKAR: Yes, that's fine. Okay. Thanks. The reason, obviously, why I'm dwelling on this is that loss of offsite power is the most important contributor, and we've reduced the loss of

offsite power initiating event frequency here to something on the order of about 60 percent of what the NUREG has, so it's a measurable event. Otherwise, I wouldn't be quibbling over, you know, small numbers.

MR. HUGHES: You're absolutely correct. Okay. This looks at the at-power loss of offsite power recovery values and the US EPR value is shown compared to the equivalent Calvert 3, or Calvert Cliffs Unit 3 value, and it demonstrates that the US EPR value is conservative. And this looks at the case of LOOP, or loss of offsite power at shutdown, which occurs over a 24 hour period with recovery and again, it compares the numbers, to demonstrate that the numbers are either the same or they are less than the EPR value.

CHAIRMAN POWERS: I have to admit, Gene, I do not hold with this table at all. This one's kind of a mystery to me.

MR. HUGHES: Let's go into that and see if we can explain it. What this value is looking at is the shutdown loss of offsite power frequency and the SD LOOP24 is the loss of offsite power in a 24-hour period and the recovery is the likelihood of recovery of that event and, Josh, can you add to that to explain, or how can we illuminate this chart?

MR. REINERT: Well, the shutdown LOOP frequency for US EPR and for CCNPP, those are both taken from 6890. The US EPR value is an industry-wide average and the Calvert Cliffs value is Calvert Cliffs-specific for 1 and 2. Shutdown LOOP recovery is also taken directly from 6890. So the .413 value is taken right out of 6890. There's no -- for shutdown LOOP recovery, 6890 does not provide site-specific values, so we felt comfortable using that .413 value for Calvert Cliffs.

MEMBER STETKAR: It might help to explain to the other Subcommittee members, when you say shutdown LOOP recovery, .413 per event, what that means. I'm not sure if that's a source of confusion.

MR. REINERT: Okay. That's the probability that, given a LOOP during shutdown, that you have a recovery within a time, and I can't remember if we modeled that time as being one hour or two hours. So that would be the probability of recovering offsite power, given that you had a LOOP during shutdown.

MEMBER STETKAR: Recovering or failing to recover?

MR. REINERT: Shutdown LOOP recovery, so the probability of recovery.

MEMBER STETKAR: I want to check whether it's a recovery or failure to recover.

CHAIRMAN POWERS: That it's .413 and not .412. If it was .412, you know, it'd just be totally unacceptable.

MR. HUGHES: Well, it's a value taken from a NUREG.

CHAIRMAN POWERS: That does not bless it.

MR. HUGHES: I understand.

CHAIRMAN POWERS: Okay. At least I know where the number came from. What's under equivalent CCNPP is just a copy of the number that came out of the NUREG, that it is not equivalent -- it's not a measured value of CCNPP.

MR. HUGHES: Oh, that's correct.

CHAIRMAN POWERS: Right.

MR. HUGHES: On internal flooding, I thought we would now go through some of the events that were analyzed, the more significant ones. The Nuclear Island is unchanged from the US EPR to the Combined Operating License Application, so it's incorporated by reference.

Nuclear Island flooding is treated in the PRA. There are no changes to it, so it's incorporated. On the balance of plant, the turbine

building is unique, and the value used for that is 3.3 ten to the minus two per year in the base PRA.

Josh, I'm going to ask you to help me with this particular value because this one is taken from NUREG/CR-2300.

MR. REINERT: That's right.

MR. HUGHES: And this is the value that we concluded when we went through it, is conservative for a modern turbine building and the detailed design is not yet complete and I was about to describe any of the detailed design features that have been looked at and I don't recall that any of those are different from what was treated in the US EPR PRA and the US EPR PRA, in fact, is a coarse treatment of this that's conservative.

So is that -- would you care to expand on that or --

MR. REINERT: I would just add that I can confirm that the Calvert Cliffs 3 design is not different than what we thought it was going to be when we did the DC work. But we didn't model it in much detail. So, for example, we didn't model the number of circ water pumps. So it's true that it's consistent with what we thought it was going to be but we didn't model it to that level of detail.

MEMBER STETKAR: Let me, just to get something on the record. This number of 3.3E to the minus two per year that you've characterized as conservative for a yet-to-be-designed turbine building configuration with not quite known plant-specific water systems routed through that turbine building is, indeed, derived from NUREG/CR-2300, which, indeed, was published in 1983. The number, in fact, was derived from Table 11-9 in that NUREG, which was from a compilation of events published in 1981 in a document, and it used to be a periodical called Nuclear Power Experience.

So we're looking at reported events of, maybe, turbine building floods in a few U.S. nuclear power plants that were operating before, let's say about 1980, and saying that that number is a conservative estimate for the frequency of internal flooding in the US EPR, or the generic EPR turbine building. It's hard to believe that that has any relevance whatsoever.

It's also hard to believe that you didn't go look at, for example, all of the internal flooding studies that were done to support all of the IPE submittals, which at least were done in the early 90s. Not clear what data they used but perhaps a little

bit more operating experience.

So it's not at all clear to me why you can say this number is generically conservative to something that we don't know anything about yet, especially given the fact that it's at least 30 years old and derived from only reported events because I used to work with nuclear power experience quite extensively. They took primarily LERs. So they didn't use, at least in those days, they didn't use information from plants if it was not a reportable event.

A lot of turbine building flooding events are probably not reportable because they didn't affect safety systems. So it's really not at all clear how this number is relevant to anything.

MR. HUGHES: The number was chosen because it was available and it was in a reference and they comparison was made based on a perception that that number was probably appropriate at the time for treatment of plants that were much older and design enhancements have occurred, improvements had occurred, and the expectation that an as-yet undesigned and incomplete design would be at least as good if not better than that number.

Hence, that number was used in the PRA.

Is there anything to add to that, Josh?

MR. REINERT: I would just add that I don't know what all -- I don't remember what all sources were looked at to come up with possible frequencies but I'm sure we looked at more than just the NUREG-2300. So I don't think that it's adequate to say that we just looked at this one number and didn't look at anything else. I'm sure that we looked at other numbers. I just don't know what they are.

MR. HUGHES: Okay. Looking at internal fire risk assessment, again, the Nuclear Island internal fire has no departures, so the fire PRA treatment in the US EPR PRA is incorporated by reference.

For the turbine building internal fire, there are no Calvert Cliffs 3 departures. The design description in the US EPR FSAR is conceptual and that includes the systems that are identified on the chart. The preliminary design is consistent with those conceptual design features, and so there's no design change or shift, and the internal fire risk assessment is incorporated by reference.

Seismic margin. Again, it's incorporated by reference in its entirety. I identified, earlier, the unique features of the soil that are continuing to

be looked at to make sure that these are in fact consistent with the 1.67 times GMRS. There's an expectation that they are. There's a belief that they are but the final word on that will be submitted in the future as we complete the response to ongoing questions.

And I believe this is identified as a subject in the SER to be closed.

MEMBER STETKAR: Did you look at, when you say there's no unique plant features that affect the seismic margins analysis, are there any underground cable ducts or underground pipeways that contain cables or piping for systems that are modeled in the PRA, that are a site-specific design feature that could be affected by the seismic, and did you look at those?

MR. HUGHES: I did not specifically look at that and I'll ask Josh if he did.

MR. REINERT: Those ducts do exist and some of them do contain equipment modeled in the PRA. I think what this is trying to say is that there aren't any Calvert Cliffs-unique features, that would impact the work that was done in the DC for soil features, which I think goes to your point. That's all Calvert Cliffs-specific work, and we still need to

--

MEMBER STETKAR: That's still in part of the on --what you're saying --

MR. REINERT: It's still ongoing.

MEMBER STETKAR: -- is that's still in part of the ongoing issue. Okay.

MR. REINERT: That's right.

CHAIRMAN POWERS: Let me make sure I understand. When you say there are no unique plant features relative to the generic design -- because there are unique features that affect the seismic margins analysis relative to an arbitrary plant or even your adjacent plants.

MR. HUGHES: I'm not sure I understood the question.

CHAIRMAN POWERS: The question is, the statement up there is there are no unique plant features that impact the seismic margins analysis. That means unique relative to the generic EPR design.

MR. HUGHES: That's correct.

CHAIRMAN POWERS: Because there clearly are unique features relative to an arbitrary plant, or even the plants that you currently have operating at Calvert Cliffs.

MR. HUGHES: That's correct. Okay. This

is a list of external events and as you can tell, there are a number of them and we've gone through them and spent time with them and I'm now going to go through them in a little bit more detail.

Now we go to the -- let's begin this journey. High winds. The Nuclear Island is designed for a 155 mile per hour three-second gust. The structures are designed consistent with applicable standards. A look has been done at the failure of non-safety-related structures to determine if they would impact the Nuclear Island and they will not. The tornado wind design is 230 miles per hour design basis and safety-related structures meet the design objective.

And so for tornado, we have significant capability and the CDF associated with that has been evaluated, and a value of five minus eight per year determined, and this looks at the combination of the tornado and the structural impact and that risk is very, very low in this sort of assessment.

CHAIRMAN POWERS: Your plant -- this plant that you're proposing to build on this site might operate for as long as 60 years?

MR. HUGHES: Yes.

CHAIRMAN POWERS: I have a large number of

people telling me that there is climate change going on.

MR. HUGHES: Yes.

CHAIRMAN POWERS: And they insist to me that things are getting -- will only get worse. They never tell me things are going to get better. In particular, they tell me that tornado frequencies and intensities will go up as a result of these changes. Do you factor that in when you look at these?

MR. HUGHES: No.

CHAIRMAN POWERS: Why?

MR. HUGHES: We factor in the analysis based upon available data. Conjecture that it could increase is certainly something that can be made and we have margin in the analysis and in the values and based upon that margin and meeting the structural design capability, we anticipate from a PRA perspective, that that treats the issue the way it should be treated, the way the consensus community would have and so we rely upon that treatment in the structural area.

CHAIRMAN POWERS: I mean, you say the consensus community. If I talk to, I can't call them friends, exactly, but acquaintances that are heavily into this climate change, they'll tell me that 280

mile per hour tornadoes are entirely possible and we'll see lots more of them. I mean, I have no idea, I know nothing about what triggers tornadoes.

MR. HUGHES: When I say the consensus community, what I'm referring to is, for example, the treatment in the Reg Guide 1.76, the regions that have been looked at, the documentation that's in those areas, as to what the type of tornado design basis should be.

And so this is the approach that's taken. If there were a decision made that the design basis needed to be strengthened, then that could be looked at. So from a PRA perspective, we assume that it meets that design.

MEMBER STETKAR: Let's see if you have an answer for a previous one. Let's see if we can finish up the tornado discussion here.

I notice that core damage frequency at 5.4 times ten to the minus eight, following up on Dr. Powers' comments, was derived from a tornado impact frequency of 6 times ten to the minus five per year, which seems pretty low but I don't have the analyses available so I don't know what wind speeds those apply to and I don't know what kind of tornado footprint you used. It's all a very kind of site-specific

calculation.

It seems a bit low, looking at, you know, tornado data, damage data. But I don't know what the tornado frequencies for, you know, a 50-mile radius, let's say, around your plant looks like. I didn't bother to go look that up.

That notwithstanding, 5.4 times ten to the minus eight is a -- you say approximately 10 percent of the baseline core damage frequency.

You've explicitly quantified many, many, many, many, many, many contributors that are much, much, much, much smaller than that. So it's not clear why you're justified screening out this contributor which is conceptually substantially larger than a lot of the things you've already quantified.

Can you comment on that.

MR. HUGHES: Yes. I think the treatment in the US EPR is to address this and screen it out. It applies to many, many different plants and they've taken Region 1, which is one of the most severe, and used that data to calculate something that would screen it out. In looking at Calvert Cliffs Unit 3, we concluded that that treatment was conservative for our plant and as a result, we adopted the same approach.

MEMBER SHACK: No. But your six times ten to the minus five is a localized tornado-strike frequency.

MEMBER STETKAR: I would assume so, since you calc -- it's 6.1 times ten to the minus five, also. It's not 6.0. Point one.

CHAIRMAN POWERS: It's a very good thing, too, because --

MEMBER STETKAR: If it were 6.2, it might be --

CHAIRMAN POWERS: Be totally unacceptable.

MR. REINERT: I can add something on why we screen some things and don't screen others. We're really only allowed to screen some things based on the PRA standard. The external events, other than internal fire, internal flood and seismic, we're allowed to screen. So where we could, we screened those.

The other contributors, we're not allowed to screen.

MEMBER STETKAR: You're allowed to -- well, but let's be realistic here. You're allowed to screen things if there's confidence that they're a small contributor to overall risk.

MR. REINERT: That's true. You're right.

MEMBER STETKAR: This is not a small contributor to overall risk. It's a measurable fraction of a very small number, but it's more important than many other measurable fractions to a very small number. You started out your presentation with these nice colored pie charts that show all of these very small fractions of a very small number. This is another one, and it's not -- if that number came out to be ten to the minus twelve, you know, I start to think that that's perhaps a very, very small fraction of a very small number.

But it's not at all clear, how you're justified screening that out based on your already-low core damage frequency. This is yet another contributor. If, indeed, the estimated frequency that you've used with the -- and you've obviously run this through your model with some evaluation of the impact -- if that has some credibility within the context of the PRA, I don't understand how it can be screened out.

MR. REINERT: Well, this was a bounding analysis. We -- I should clarify what I said earlier. We're allowed to screen out some external events using this probabilistic cut-off criteria for the other internal events, internal fire, flood and

seismic. You're allowed to screen based on different criteria, and that's I think what you were alluding to, where, if you can show that it's a similar initiator but that the consequence is a couple of orders of magnitude less, then you can screen out.

So that's why not every initiator conceivable is in the initiating events.

Here, we're screening -- here, this is an external event that we're allowed to screen based on just a flat probabilistic cut-off. So we did a very conservative bounding analysis which is just kind of roughly described here.

MEMBER STETKAR: How conservatively bounding -- you know, I'll put you on the spot. You're using words, conservative and bounding, which are not technical, quantitative words; they're simply words. What's your best estimate on the core damage frequency? Is it a factor of ten lower than this?

Is it a factor of a hundred? Is it a factor of 10,000 lower than this?

MR. REINERT: I would really just be guessing. We didn't do further analysis other than to come up with this number.

MEMBER STETKAR: You did a detailed analysis on shutdown events and the total core damage

frequency from everything that you considered during shutdown is 5.8 times ten to the minus eight per year.

MR. REINERT: That's right.

MEMBER STETKAR: About equal to this. You've subdivided that into things that are as small as a one percent contributor to that small value.

MR. REINERT: Well, that's true but that doesn't allow me to estimate what the tornado assessment is --

MEMBER STETKAR: What you're saying is if you did a real tornado analysis for the Calvert Cliffs site with the Calvert Cliffs PRA, you're confident that, indeed, the core damage frequency would be lower than this value. But you've not done that analysis.

MR. REINERT: That's true.

MEMBER STETKAR: Well, why don't you do the analysis?

MR. HUGHES: The analysis will be part of the PRA that's done at fuel load that meets all of the standards in effect and so, ultimately, that analysis will exist. But at this stage, using the design and this approach, the screening is a reasonable approach to determine whether or not further analysis is required.

MEMBER STETKAR: If you did the analysis

at this stage and it identified particularly vulnerable structures or particular structures that were vulnerable to tornado damage, would that possibly affect any of the construction program?

MR. HUGHES: The reason for this particular approach and for the screening is to confirm that there is high confidence that that would not occur. So the hypothetical is of course it could and it would, but it's a hypothetical that, based on this analysis, would not occur.

MEMBER STETKAR: I guess we'll talk -- I think there's an open item on this with the staff, isn't there?

(No response.)

MEMBER STETKAR: Okay. Thanks.

MR. HUGHES: Okay, next. The next item is external flooding. This is a qualitative review based on the work that's in Chapter 2. The makeup water intake structure and electrical building meet the deterministic criteria in the SRP and based upon that, we declare that the risk is very, very low without further analysis from external flood.

And for this particular site there is substantial margin, so that's an extremely confident assertion.

External fire. Again, this is a qualitative treatment. A review was done. The zone around the plant is cleared. There is an area between the plant and the Bay that the state would like to have some retained foresting on. But looking at it and considering the habitability of the control room, the ability to isolate, the recirculation capability and the capacity with which people could stay in the control room and the likelihood that a forest fire could survive that long and continue to impact the plant, the risk for this is considered to be very, very low based on that qualitative assessment.

MEMBER STETKAR: Earlier, you mentioned that the -- I lost the slide, but you'd mentioned that a toxic gas detection system will not be installed --

MR. HUGHES: That's correct.

MEMBER STETKAR: -- at Calvert Cliffs. Does the control room air intake system include toxic-gas or smoke detection? You mentioned the ability to isolate --

MR. HUGHES: The ability to isolate here is a manual isolation.

MEMBER STETKAR: Manual. Okay.

MR. HUGHES: Airplane crash has been looked at and this is part of an NRC question: RAI

1.98. It is continuing to be looked at. The value that we've identified here, 1.1 times ten to the minus seven per year is considered to be very, very low, and when I write this phrase, very, very low, I am referring to the fact that, in terms of absolute risk, that's a very low number. In terms of relative, I will acknowledge that it's not that far from the calculated value that we have and, in fact, in an upcoming response, we will be revising this value. This is a conservative value and the revised value will be lower.

CHAIRMAN POWERS: How could it go lower? I mean, it seems to me --

MR. HUGHES: I think it'll be a range --

CHAIRMAN POWERS: -- if you're randomly thinking about airplanes, you're going to come up with numbers on this order.

MR. HUGHES: The way these numbers are generated is by analyzing different types of planes and that kind of information is in there.

CHAIRMAN POWERS: You don't need to go into detail on this one.

MR. HUGHES: Okay.

MEMBER STETKAR: Well, let me ask one thing, though, about this number, and I'm searching

for the right section here, just to make sure I don't -- let me ask it because I can't find it quickly, just to keep us on schedule. I found it. That number in the FSAR says, the bounding scenario is an airplane crash into Safeguards Building 1 or Safeguards Building 4 results in a core damage frequency of 1.1E to the minus seven.

That is the core damage frequency from one aircraft crash into one -- it's a lumped building. You took one and four together. It's not the total aircraft crash damage frequency from all aircraft crashes into any location in the plant; is that correct? This is only a single scenario.

MR. REINERT: No. What you described is one scenario There are other scenarios but the numbers were so small, that they don't show up when you total them all up. It's almost still the same.

MEMBER STETKAR: That's a little surprising but --

MR. REINERT: And also, I want to clarify that the name of the scenario is as you describe but the structures that are assumed failed are more than just the one Safeguard Building. So we looked at all the structures that would fail, given that an airplane would come in from a certain direction, and

failed those structures.

MEMBER STETKAR: Yes. We've got to be a little careful about--

MR. REINERT: Right.

MEMBER STETKAR: Okay. I just, when I read through it, the way it's characterized, at least in the FSAR, is it's characterized as the frequency from the bounding scenario. And there is a discussion in the FSAR of other crash scenarios that are, you know, apparently quantified, that they're not results in there.

The only caution that I have is that when you refine the numbers, in response to the RAI, be sure that you clarify what the total aircraft crash damage frequency is from all crash scenarios. Don't restrict that only to core damage. Obviously, you want to look at large release frequency also.

MR. HUGHES: Okay. So noted. Okay. We now get into a number of offsite hazards, and for highway hazards, the conclusion is reached that they are simply too far away. We looked at different types of releases that could occur, and they really could not affect the plant.

For waterway, we looked at the fact that in many cases they are far enough away, that even on

the waterway there would not be an impact on the plant. With ammonia, we identified there could be, but the number of shipments per year is 10 percent of the limit for screening from the SRP, and so we adopted the screen.

For pipeline, it's too far away.

Yes?

MEMBER STETKAR: Just remember, the SRP, those numbers presume that your core damage frequency is somewhere around ten to the minus four per year. Yours isn't.

MR. HUGHES: This is an interesting comment that I will respond to. I agree that it's appropriate to consider the impact of a particular type of accident on your perspective of the risk of the facility. So given a very low-risk facility, it's certainly appropriate to consider that in determining what should be treated and where it should be.

That said, I think there are limits on how far we should go in terms of identifying a number for screening, based solely on the fact that it is relative to the things that are not screened. I think the fact that the risk itself is determined to be, based on a reasonable analysis, very low, is sufficient to defer any further calculations until the

time at which one is going to do that analysis in detail.

MEMBER STETKAR: I just -- you know, we need to keep on schedule here. This is a sort of philosophical discussion.

MR. HUGHES: It is.

MEMBER STETKAR: The only point to that is that once something is screened out, it tends not to be looked at again. It tends to disappear because there was justification to remove it. And there's a bit of danger about that. And that's especially true as you go from a conceptual design down to a more focused plant-specific design.

The other problem is that if we indeed are performing risk assessment to both understand, from a public health perspective, what the risk from a facility is, I'd want confidence that my estimation of that is relatively complete.

And from an internal perspective, if, indeed, my risk is driven by a large number of external conditions that are beyond my control as an owner-operator, that's important information to me because that says that there isn't much that I can do to the internal parts of my plant, that's actually going to affect that overall risk.

I mean, it's important knowledge to the owner-operator of the plant, even though a lot of these things may be cumulatively small. That is important perspective, even from managing your day to day operations. You know, do I put in yet one more widget to yet reduce an internal core damage frequency by another, you know, 7 percent, when, indeed, we have good confidence that the overall risk is driven by a lot of other things?

So that's another kind of impetus to think seriously about these other contributors. End of philosophy.

MR. HUGHES: Well, one other piece of philosophy, if you'll bear with me, and I'm keenly aware of the time. The other part of this philosophical discussion I think should include, at some other time, consideration of the fact that different hazards, when looked at in different ways, can contribute more or less conservatism in the way they're addressed, and that can affect the perception of what should be done about them.

And so care has to be taken to not only identify the uncertainty, but also to identify the certain conservatism that might be, because that can affect the owner-operator's perception of what these

things might be. The total picture needs to be presented.

Continuing with the chart, railroads are not nearby. The nearby facilities that are there include gasoline, explosion or release from Calvert Cliffs 1, 2 and 3, things that are stored on site; ammonium hydroxide, rather; an LNG terminal; and looking at each of these, the initiating event frequency was first determined to be less than one minus six per year, but acknowledging that this is a criterion that leaves some question for a plant with such a low core damage frequency, the initiating event frequency is actually less than one minus seven per year.

Am I correct, Josh?

MR. REINERT: No. Some of the initiating event frequencies, right now, are higher than one minus seven.

MR. HUGHES: But that's only for the initiating event--

MR. REINERT: The initiating event.

MR. HUGHES: -- not for something that would affect the plant?

MR. REINERT: That's right.

MR. HUGHES: So the --

MEMBER STETKAR: Wait. Are you saying that explosions in an LNG terminal is less than ten to the minus -- I don't understand numbers that small -- six or seven per year? Or is that the frequency of an explosion at an LNG terminal that would have an impact on the plant?

MR. REINERT: For the LNG terminal, any explosion would not impact the plant.

MEMBER STETKAR: Okay.

MR. HUGHES: We screen that on distance rather than frequency.

MEMBER STETKAR: I just want to make sure that we're not saying that, you know, LNG terminals --

MR. HUGHES: It's a pretty good LNG terminal.

MEMBER STETKAR: That's a darn good LNG -- I'll buy that one.

MR. HUGHES: Okay. To summarize, there are currently no ASLB contentions related to this area. I have not mentioned, by the way, the severe accident part of chapter nineteen.

The severe accident part, we've identified no departures that would impact what's treated there. There is an open RAI related to -- in fact, we just answered the question. There is a question related to

our use of the severe accident management guidance procedures, and the answer we provided was one that basically pointed to the fact that there are revisions coming, and when the revisions are made and the documents are correct, we can reference, and so the expectation is that we will follow the severe accident management guidelines exactly as they are developed, and that commitment will be made when the documents are in the right position to be made.

Unique plant features are bounded, and we looked at departures and exceptions, and so we've chosen to adopt the US EPR PRA, by reference, as the Calvert Cliffs Unit 3 PRA as we've described today.

MR. GIBSON: We did have a request, Dr. Stetkar. If you would like to speak, we do have an individual from AREVA who has interfaced with you during your visit with regard to the credit for the load rejection in the PRA.

If you would like to take that, or we can take that offline. Whichever you would like to do.

MEMBER STETKAR: I guess in the interest of time, let's see how it goes, Greg.

MR. GIBSON: Okay.

MEMBER STETKAR: Perhaps if there's time left later -- it's a big enough issue, that if we can

do it online that's fine, but I don't want to necessarily get into a detailed discussion that's going to take time away from the staff's presentation, or other things we have on the agenda.

MR. GIBSON: Understand.

MEMBER STETKAR: So let's -- if we have time at the end, we can do that. Otherwise, we'll do it offline.

CHAIRMAN POWERS: I'm sure we'll have time.

MR. GIBSON: Very good.

CHAIRMAN POWERS: What I propose now is that we go ahead and take our break for 15 minutes now, and then we'll come back and listen to the staff's presentation, if that's acceptable. So 15 minutes and we'll come back.

(Whereupon, the above-entitled proceeding went off the record at 9:54 a.m. and resumed at 10:13 a.m.)

CHAIRMAN POWERS: Let's get back into session. Surinder, it's your--

MR. ARORA: Good morning. We are here to present the staff's presentation on Chapter 19, and I would like to introduce Jason Carneal. He's the project manager, Chapter PM, for chapter 19, and he

and the representatives from technical staff will be making the presentation today.

Jason.

MR. CARNEAL: Thank you, Surinder. My name is Jason Carneal. I'm the Chapter PM for Chapters 4, 6, 15, 17 and 19 in the US EPR Design Center. I received a bachelor's and master's in engineering mechanics from Virginia Tech, and before coming to the NRC, I worked for four years as a mechanical engineer at the Naval Surface Warfare Center, Carderock Division, where I performed experimental studies on naval hydrodynamics.

CHAIRMAN POWERS: How could you give that up? Because this is so important to the national interest. That's the answer, right?

(Laughter.)

MR. CARNEAL: That's right. And the pay here is slightly better than at the Navy.

CHAIRMAN POWERS: Ah. But the rewards.

MR. CARNEAL: This presentation will cover the staff's safety evaluation report with open items for Chapter 19, Probabilistic Risk Assessment and severe accident mitigation.

There are several representatives from the technical staff that were involved in this review.

Today, we're joined by Hanh Phan and Malcolm Patterson from the PRA and Severe Accidents Branch. Also the Lead PM on this project is Surinder Arora, and the previous Chapter PM was Prosanta Chowdhury who was involved in most of this work.

This presentation will cover our review of sections 19.1, Probabilistic Risk Assessment, and Section 19.2, Severe Accident Evaluation. We'll cover the COL information items of interest, including the open items that remain, carrying into Phase IV of our review.

In Chapter 19, we have a total of seven open items. Six open items are in section 19.1, and there's one outstanding open item in section 19.2 for severe accidents.

In total, we've issued six sets of RAIs and 25 questions during our review of the Calvert Cliffs application.

The next slide gives a high-level overview of the open items that remain in our review of Chapter 19. They include issues relating to seismic sequences, external events, airplane crash events, and toxic chemical release.

On the next slide the remaining three open items are mentioned, the high-level summary, tornado

strike frequency, hurricanes, and severe accident management guidelines.

If you have any detailed questions that we don't mention in the subsequent presentation, please let us know and we'll try to address your comments.

CHAIRMAN POWERS: Okay. Your intent is to go through each of these open items and have us interrogate in detail, right?

MR. CARNEAL: I think the majority of the open items are covered, but there might be one or two that are not mentioned specifically in a subsequent presentation --

CHAIRMAN POWERS: Okay. So we need to be alert.

MR. CARNEAL: So if we miss something, please let us know.

CHAIRMAN POWERS: We're not noted for being reticent.

MR. CARNEAL: Okay. With that, I'll turn the presentation over to Hanh Phan, the lead technical reviewer.

MR. PHAN: Thank you, Jason. My name is Hanh Phan and I am the lead reviewer for US EPR DC and Calvert Cliffs Nuclear Power Plant Unit 3, COL FSAR, Chapter 19.

Today, my colleagues and I will be presenting the staff evaluation on the Calvert Cliffs PRA and the Severe Accident.

I have over 20 years in nuclear, specializing in PRA and reliability. I have led PRA development and PRA application. I joined the NRC in 2006. Prior to that, I worked at the nuclear power plants in the national labs. I have a bachelor's and master's degrees in electrical engineering from Washington State University.

I would start my presentation by the approach that the staff has taken to review Calvert Cliffs Chapter 19.

The staff review focused on the 11 COL information items identified in the U.S. EPR DC FSAR and the Calvert Cliffs FSAR, and additional plant-specific information provided in the Calvert Cliffs Unit 3 FSAR.

To come to the conclusion, the staff discussed plant-specific information with all the technical branches. We discussed technical issues with other NRC offices. We ensured consistency with other COL applications, and we ensured consistency with the analyses documented in other chapters. Next slide, please.

As described in the COL FSAR, several external events were screened out from the PRA by using deterministic or probabilistic screening approach. For the deterministic screening assessment, the staff ensured and confirmed that the potential hazards associated with the postulated external event does not adversely affect the plant.

Second, the plant is designed to accommodate the maximum size of the postulated external event.

For the probabilistic screening assessment, the staff confirmed conformance with Reg Guide 1.200 quantitative screening criteria, and ensure that the conservative estimate that the CDF and LRF are lower than the baseline risk values. Next slide, please.

For the next 13 slides, we will go through 11 COL information items presented in the FSAR Chapter 19.

COL Information Item 19.0-1 directs the COL applicant to either confirm that the PRA in the DC bounds the site-specific design information and any design changes or departures, or update the PRA to reflect this information.

The COL FSAR states that the US EPR

design-specific PRA bounds Calvert Cliffs PRA.

Currently, the staff is unable to finalize its conclusion on this information item since this item relates to other areas such as: supplemental information provided by the COL applicant to address site-specific design information; site-specific effects of seismic hazards; and site-specific external events. Those we have a few open items as Jason mentioned earlier. Next slide, please.

On the next three slides, COL Information Items 19.1-1, 19.1-2 and 19.1-3 direct the COL applicant to describe the uses of PRA in support of licensee programs, and to identify and describe risk-informed applications being implemented during the COL application phase, construction phase, and operational phase, respectively.

In the FSAR, the COL applicant stated that during the application phase, construction phase, and operational phase, no risk-informed application are proposed. The staff concludes that the COL applicant has fully addressed COL's information items 19.1-1, 19.1-2, and 19.1-3, consistent with the SRP. Next slide, please. Please go to slide thirteen.

COL Information Item 19.1-4 directs the COL applicant to conduct a peer review of the PRA

relative to the ASME PRA standard prior to use of the PRA to support risk-informed application or before fuel load. The staff recognized that because the full peer review cannot be completed prior to construction of Calvert Cliffs Unit 3 due to the lack of plant procedures and plant walkdowns, and the others. Thus, the staff concludes that the COL applicant has properly addressed COL information items 19.1-4 by including the following statement as a proposed license condition in Part 10, Section 2 of the CCNPP Unit 3 COL application.

The statement states that a peer review of the PRA relative to the ASME PRA standard shall be performed prior to the use of the PRA to support risk-informed applications or before fuel load. Next slide, please.

COL Information Item 19.1-5 directs the COL applicant to describe the COL applicant's PRA maintenance and upgrade program. The staff determines that the COL applicant has properly addressed COL information Item 19.1-5 by including the following statement as a proposed license condition in Part 10, Section 2, of the Calvert Cliffs Unit 3 COL application. The CCNPP Unit 3 PRA shall be treated as a living document. A PRA Configuration Control

Program shall be put in place to maintain or upgrade the PRA, as defined in ASME Standard 2007 and as clarified by Reg Guide 1.200. Next slide, please.

COL information Item 19.1-6 directs the COL applicant to confirm that the US EPR design-specific PRA-based seismic margins assessment is bounding for their specific site.

In COL FSAR, the COL applicant made a comparison of the site-specific GMRS to the US EPR CSDRS, and demonstrated that the GMRS is lower than the CSDRS.

The applicant concluded that the seismic demands for Calvert Cliffs Unit 3 are lower than that used for the US EPR FSAR. Therefore, the US EPR FSAR bounds site-specific parameters and they do not have a significant impact on the Calvert Cliffs Unit 3 PRA results and insights.

In accordance with 10 CFR Part 52, the staff expects that the applicant describe the update of the US EPR design-specific PRA-based seismic margin analysis to incorporate site-specific and plant-specific information.

Thus, in RAI 160, Question 19-19, the staff requested that the COL applicant provide an update to the system model developed in the US EPR

FSAR to identify and incorporate any site-specific capacity reductions due to site-specific effects and site-specific structures. In addition, the COL should demonstrate the plant seismic margins to be 1.67 times the site SSE.

The staff is currently reviewing the response. Question 19-19 is being tracked as an open item. For additional information, recently, the staff received the seismic evaluation from AREVA during shutdown.

The staff is going to ask the COL applicant to release it and analyze the seismic risk during shutdown, and that is not in the safety evaluations yet.

COL Information Item 19.1-7 directs the COL applicant to perform site-specific screening analysis and site-specific risk analysis for applicable external events.

The applicant addressed all external events listed in Appendix A of the ANSI/ANS 2003, "External Events in PRA Methodology." This is consistent with the ASME/ANS 2009 combined PRA standard. The applicant follows the guidance in the ANS standard as well as guidance in NUREG-1407 to evaluate the external events. Next slide, please.

Reg Guide 1.200, Section C.1.2.5., states that: It is recognized that for those new reactor designs with substantially lower risk profiles, for example, internal events CDF below 1E minus 6 per year, the quantitative screening value should be adjusted according to the relative baseline risk value.

The staff found that some external events were screened out using the screening values higher than the Calvert Cliffs baseline CDF. For example, the airplane crash. The bounding CDF was estimated to be 1.1 minus seven per year and the applicant screens that event out from the PRA.

The staff has one specific question regarding to that event, and that question is being tracked as an open item, 19-21.

In Question 19-13 and follow-up question 19-20, the staff requested that the COL applicant reassess the external events using an appropriate PRA screening value, or quantitatively justify that when all conservatisms are removed from the analysis, the resulting CDF and LRF would be significantly lower than the total baseline CDF and LRF.

Question 19-20 is being tracked as an open item.

COL Information Item 19.1-8 directs the COL applicant to describe the use of PRA in support of site-specific design programs and processes during the design phase.

The COL FSAR states that during the design phase, no additional PRA-related design activities are anticipated for Calvert Cliffs Unit 3.

With that, I'd like to turn over to Malcolm Patterson. He is going to cover COL Information 19.1-9 and the Severe Accident evaluation.

MR. PATTERSON: Thank you. I'm Malcolm Patterson. A brief bit on my background. I graduated from the Naval Academy with a bachelor's in systems engineering in 1975. I've been involved in nuclear matters ever since, including 10 years at a utility in the design organization and 16 years in various consulting roles, before I came to the NRC three years ago. I've in PRA here, both in NRR and now in NRO.

The review was actually conducted by Teresa Clark, who's appeared before you before, but now I have responsibility for Chapter 19. The basic approach taken for internal events was simply to confirm the site-specific and plant-specific features were consistent with the EPR PRA, which was incorporated by reference.

Focus was on loss of offsite power and on balance-of-plant systems that might be affected by local factors, primarily circulating water and supporting systems, and the result was confirmation that, in fact, the assumptions of the EPR PRA were bounding. In the area of severe accidents --

MEMBER STETKAR: Malcolm, let me stop you. You didn't think I was going to be quiet for the entire presentation, did you?

MR. PATTERSON: I was hoping.

MEMBER STETKAR: We already talked about the loss of offsite power, so I'm not going to say much of anything more about that.

One area, and you did have it on your slide there, the balance-of-plant systems, in particular, circulating water. It's asserted that the design PRA models for the circulating water system are appropriately bounding and conservative for the design-specific configuration of those systems.

I happen to know that the models for those systems in the design PRA consists of one basic event. That basic event is assigned a number for the purposes of initiating event frequency of 1.0, a not precise number, E to the minus 2 event per year. One event in a 100 years.

And that number is then backed down to an hourly failure rate that's applied over 24-hour mission time to get the unavailability of that basic event. It has no links whatsoever to support systems. It has no links to numbers of pumps. It is simply a number.

It's curious, why that number is a appropriately bounding model for the actual plant-specific configuration of the cooling water systems, and their dependencies.

MR. PATTERSON: What they have is four 25 percent circulating water pumps, and modeling that wasn't, didn't give us a challenge in reaching a one times ten to the minus two failure rate.

But I'd have to come back to deal with anything --

MEMBER STETKAR: I'm not so concerned about four pumps failing, you know, put a common-cause failure on it, whatever you want to do. I'm a little bit more concerned about modeling the actual configuration of the plant with the fact that it does have four pumps but they're powered from four specific electrical buses. Failures of electrical power have then impacts on availability of cooling water.

I believe it's the circulating water

system supplies the auxiliary cooling water system. I don't know -- our problem is we don't enough about the plant yet, as a subcommittee, to go much further into systems designs, but I'm assuming the Auxiliary Cooling Water System cools some things by its nature.

I think it actually cools the turbine building closed cooling water system which cools everything in the turbine building.

And it's with those types of systems interactions and support system failures, that it's not clear that a ten to the minus two number -- or granted, a ten to the minus two number for failure of four pumps is an appropriately bounding number. It's not clear that that number bounds the effects of all of the cooling water systems in the integrated PRA.

Numerically, it might. I'm not trying to say that perhaps the plant-specific cooling water design is risk-significant, but it's not clear that that number justifies lack of a more detailed evaluation of that design and its dependencies and interactions.

MR. PATTERSON: Point taken. The issue was the level of confidence that we needed to come to the conclusion that this plant was in fact bounded by the EPR PRA.

MEMBER STETKAR: And that's the important thing. Remember that the design PRA, very small contributors to a very small number, is bounding for this perhaps slightly larger or slightly smaller contributor to a very small number. If, indeed, the real contribution is smaller, then indeed, the design PRA is bounding.

If a real model of the system shows a slightly higher contributor, then the design PRA is not bounding. It's not bounding. The overall risk might be acceptable, certainly, the contributors to the risk might be well-balanced, but it's difficult to state that the design PRA is a bounding PRA then, which is the statement that's being made.

MR. PATTERSON: Yes.

MEMBER STETKAR: I don't know --

MR. PATTERSON: I don't have any response for you other than to say that at the time of fuel load, a realistic plant PRA is expected to model those details. We weren't looking to find that level of detail in this PRA at the time of COL.

CHAIRMAN POWERS: Well, there you go.

MR. PATTERSON: On severe accidents, here, again, the Calvert Cliffs application incorporated the EPR design by reference. There is an issue, COL

Information Item 19.1-9, indicates that the COL applicant should review, as designed and as-built information, and conduct walkdowns, as necessary, to confirm that the assumptions used in the PRA remain valid. Obviously, this is not practical.

What has been done is that a license condition has been proposed to have this activity performed before fuel load, and the staff considers this acceptable.

Now we'll get to severe accidents. The applicant that references the US ERP design certification will develop and implement severe accident management guidelines prior to fuel loading using the operating strategies for severe accidents. We have a response from Calvert Cliffs and are tracking as an open item until it's resolved.

MR. PHAN: With that, the staff would be happy to take any questions you have on our evaluation.

MEMBER SHACK: Just one, that John sort of brought it up earlier, that you have two outs here. You know, if you meet essentially the deterministic criteria in the SRP, you can walk; otherwise, you have to go through this kind of screening criteria. And implicit in those deterministic criteria is probably

an assumption that the risk is small, and it used to be small compared to the baseline PRA.

But it's not at all clear to me that the risks from those sort of deterministic calculations are any different than the kind of semi-quantitative screenings we're now applying, and, you know, sometimes you get to walk and sometimes you don't.

Is there any thought to whether those are inconsistencies in the SRP criteria for, between the deterministic and the qualitative CDF/LRF screening kind of criteria.

MR. PHAN: Yes. The SRP allows the applicant to screen out the event if that event met the deterministic criteria of the SRP. However, from the staff performance, for those that we believe to have potential impacts to the baseline risks, such as airplane crash or transportation, or any, like tornadoes or high winds, we look into the probabilistic because the information provided in Chapter 19, that the PRA side, not the deterministic side. So we look into every single external events for both. If we believe, or if the applicant can justify that the events cannot have any significant impacts, as tsunami, then we can allow the screenings using just deterministic approach.

Otherwise, we look into the probabilistic side of it.

MEMBER SHACK: Okay. You know, when I have an EPR or an ESBWR, and my baseline risk is, you know, on the order of ten to the minus seven, you know, there was some implicit assumption in the choice of the deterministic criteria, even, I think, if the risks were small, and it's not clear that there's a consistency there.

MR. PATTERSON: Right. Where we have open items, it's because the staff thinks that these issues should be aired in the PRA and incorporated in the values adopted as the CDF for the plant. We're not saying that there's anything the applicant can do about accidental aircraft impact.

We're just saying this is the reality -- a large -- a larger percentage of your total risk is coming from external events, and that should affect the way we look at plants.

MR. PHAN: In RAI, we did request the applicant to enclose the CDF for external events, if that have like 10 percent contribution to the total core damage frequency, the baseline core damage frequency.

MR. DUBE: This is Don Dube, Office of New

Reactors. Just a little history behind this. The SRP screening sort of was a holder from IPEEE days, which was obviously for currently operating plants, and was fine for -- when the core damage frequency baselines are in the ten to minus five to ten to minus four range, but as you mentioned, you know, the current generation of plants we're seeing ten to minus eight, ten to minus seven, you know, at most ten to minus six kind of core damage frequencies.

And so it begs the question, you know, is the SRP and the ten to minus six, that's in the ASME/AMS standard appropriate for advanced light water reactors where the baselines are so much lower? And so as a result of that, in Draft Guide 1200, and now the revision to Reg Guide 1.200, which is on technical adequacy, we inserted this paragraph, kind of as a warning, or a caution, that, you know, those screening values were fine for currently-operating reactors, but obviously it's inadequate for when the baseline or internal events core damage frequency is so much lower, and then one should use an appropriately lower screening value.

We were careful not to specify any particular number, leave it to the applicant, but we had that concern.

MEMBER SHACK: I was just wondering if there was any consistency, because you haven't adjusted the deterministic requirements, which again, while they don't explicitly have a risk to them, you implicitly believe that if you follow the deterministic requirements, the risk was small, and it's certainly small compared to ten to the minus four.

MR. DUBE: Right.

MEMBER SHACK: Whether it's small to ten to the minus seven or ten to the minus eight is a slightly different question.

MR. DUBE: Right.

MEMBER SHACK: And I guess the answer is nobody's thought about that yet. We're just -- you just sort of -- you're still using those deterministic as a get out of jail free card and --

MR. DUBE: Well, actually, the way it was -- and we have actually an action to come with another revision to Reg Guide 1.200, because the way this caution that I mentioned was put into the Reg Guide was probably put in the wrong place, grammatically, so that the SRP is -- can be used, and it really should have been an overall escape, regardless of the SRP.

One still should look at these external

events and --

MEMBER SHACK: Well, I suppose you need risk metrics for these new reactors first.

MR. DUBE: Right. And so even if it meets the 75 SRP, if the baseline -- if the potential contribution of an external event is of the order of internal events, it shouldn't be screened out. So we're actually looking to revise Reg Guide 1.200, on an expedited basis, to address that concern, exactly what you mentioned.

MR. PHAN: Dr. Shack, in the SRP, the criterias, including that either deterministic or probabilistic. My personal thinking, that "or" ought to be an "and." And external events, that's an "and," not an "or," which means that they have to meet both deterministic and probabilistic performance.

MEMBER SHACK: It's another way to look at it. But I think most people treat them as an or gate rather than --

MR. PHAN: Yes.

MR. PATTERSON: It is hard to argue, though, that the deterministic requirements should be tightened, because we are achieving the safety goals.

MEMBER SHACK: You can make the same argument about the qualitative screening, although you

can argue that one, you're looking for a realistic assessment. But like I said, it does need some connection with the risk metrics that you're going to use for these advanced reactors.

MR. PATTERSON: We're looking for a complete assessment of risk and the point of screening was to say these don't contribute to risk, and that's --

MEMBER SHACK: But those deterministic ones that you're screening out, on the level that we're talking about, aren't so clear that they are contributors to risk.

Once we get down to these levels, it --

MEMBER STETKAR: When you have a small total that's comprised of, you know, 50 equal two percent contributors, it's really difficult to find something that's insignificant compared to any of those.

Malcolm, I wanted to ask you, just following up on one, back to the question I asked the applicant about their internal flood frequency. I noticed you had an RAI and a question about that, and you concluded that the frequency -- I'll quote it.

The staff's review concludes that the use of 3.3E to the minus 2 per year of NUREG/CR-2300 is

reasonable for CCNP Unit 3 turbine building flooding and does not have a significant impact on the results and insights of the PRA at the COL stage.

Why does the staff -- just simply because it's a number in a NUREG -- why does the staff accept a 30 year old estimate that's derived from a very small number of nuclear power plants in the United States, from probably only in the 1980s, as the basis for an internal flooding frequency for this particular plant?

MR. PHAN: In the AREVA EPR DC application, AREVA used generic numbers and the staff is asking why. And also in Question 19-14, the staff also asks the COL applicant to justify the use of that value.

In their response, they say in that because no detailed information available at the application stage, which means that they cannot correlate the frequency based on the pipe segments at this stage. So with that, the staff is expecting to see more details when the full PRA developed consistence with the ASME standard at the fuel load, and this information will be updated to reflect that.

At this point, because they justify case of no detail available, so the staff did accept the

numbers.

MEMBER STETKAR: The staff has it as -- I can't speak clearly -- but the staff has available the IPEEE studies that were submitted from every plant in the United States, is that correct?

MR. PHAN: Yes.

MEMBER STETKAR: Did they quantify frequencies of internal flooding in the turbine building?

MR. PHAN: I don't have the answer to that.

MEMBER STETKAR: Since you don't have that answer, my next question was did you go back and look at those IPEEEs--

MR. PHAN: Yes, I --

MEMBER STETKAR: -- to see what frequencies were used in those studies and recognizing --

MR. PHAN: Yes, I --

MEMBER STETKAR: Let me finish.

MR. PHAN: Yes.

MEMBER STETKAR: -- recognizing that they are, in principle, plant-specific studies, but look at the range of those plant-specific frequencies and see how they, at least, on a -- as a generic estimator

with some uncertainty, some variability anyway, compared to this 3.3E to the minus two number?

MR. PHAN: Yes, I did look at NUREG-1507 for the IPEEE. However, I did not look into specific flooding frequency for the turbine building.

MEMBER STETKAR: I think that would be an interesting piece of information, recognizing that those frequencies are probably out of date, because they're also at least 20 years old now. But it would be an interesting piece of information to gain some confidence, at least, in whether this number is, you know, high, low, or indifferent compared to those frequencies.

CHAIRMAN POWERS: I would like to revisit the staff's view on this other thing, on things like the frequencies of intense tornadoes, hurricanes, and things like that, where we tend to do that primarily based on the historical record, and now we have people calling into question the applicability of that historical record.

What do we do about that?

MR. PHAN: The staff has one open item on the tornado frequency. The applicant provides the values of -- I apologize, I have to say this correctly.

MEMBER SHACK: 6.1 times ten to the minus five.

MR. PHAN: Thank you, sir.

Without any justification. So that's being tracked as an open item.

MEMBER SHACK: But he's going to go back and compute that out of NUREG/CR-4461, which doesn't address Dr. Powers's question. Although it's a 2007 revision. I mean, it's about --

CHAIRMAN POWERS: It doesn't matter. I'm more worried about the 2067 frequencies of tornadoes and hurricanes, and I have a community of people that claim they know things about hurricane frequencies. I'm not in a position to independently judge the quality of their information. And in that community, there seems to be two schools of thought.

One says -- they all seem to think that the hurricane frequencies go up. One school of thought claims that very intense hurricane frequencies also goes up in approximate proportion to the number of intense hurricanes that we have now. And the other one says no, verily, it goes down, and we have lots of hurricanes but there are not so many intense ones.

I have no basis for judging this information, except to say, okay, here's some expert

opinion of people that study these things. They, sadly, have a vested interest in the outcome of this, I'm finding. And I don't know what to do about it.

And since I know the staff is much brighter on these matters than I will ever hope to be, if I stay up at night studying, I'll ask you guys. What do you do about this? Since you're about to certify or license, in this case, a plant that, it could be around till 2067, when some people claim that the world will come to an end.

I know you don't care if the world's going to come to an end.

MR. PHAN: One step that the staff can be taking is to Google the history -- we've got to Google the history about Calvert Cliffs to see any hurricanes in the past and --

CHAIRMAN POWERS: But they say that -- I mean, I know the hurricane frequency on the Atlantic Coast. The history is known extremely well. I mean, if we were working on a Gulf Coast plant, then I'd say, well, maybe we don't know too much. But that's not the problem. The problem is that we now have oil flooding into the only intakes, and things like that.

But for the Atlantic Coast, we're in good shape. We know how often hurricanes hit, and

hurricanes hit the Maryland coast only if they're very intense and take a very peculiar track.

I have people telling me that, now all that historical record is out, and indeed, the tracking of hurricanes is going to be different. I have no idea whether they're right. So what do we do about that?

MR. PATTERSON: My bias is to update the data as new data appears.

CHAIRMAN POWERS: The difficulty of course is the plant's going to be built, and you're going to come along and say, oh, these guys were right, these intense hurricanes are going to go up. But there's nothing we can do about it because the plant's already built and we've given it a license. That's the problem.

MEMBER STETKAR: Let me join in the philosophical fray here. I know you're asking the staff, but I look at it, Dana, as -- it's an excellent question. Can the plant do anything about severe hurricanes once it's built? No, it certainly can't. If hurricanes were, under the current frequencies and severities that are assigned, if they were a very significant contributor to the plant, A, I'd be worried about it today, and I'd be more worried about

it in the future.

If it's a very small contribution today and can be justified, it might get larger in the future, but it's unlikely that it would raise to, you know, a factor of ten times higher from its current contribution. That's philosophical because you can argue about the numbers.

On the other hand, if hurricanes are screened out entirely and are never revisited again as we gather more data, without the ability to actually quantify the effects of changes, measured changes or projected changes in climatological data, we've lost the ability to understand what that risk might be.

So I view it, you know, if it's screened out entirely at this stage in the game, it's not likely to ever be reintroduced. That's the way PRA works. And if the hazard becomes much higher in the future, unless the really catastrophic hurricane just happens to hit the Calvert Cliffs site, it's very unlikely that the PRA will ever go back and revisit those screening analyses. So your concerns I translate more into a even more importance assigned to whether or not those issues, those climatological issues are screened out and forever to not be revisited in terms of this PRA.

Because at least if it's in there, if you have some evidence, you can --

CHAIRMAN POWERS: Let me get you a little more excited. The issues of hurricanes is just one issue here. The problem is hurricanes, especially the more intense hurricanes, spawn tornadoes.

MEMBER STETKAR: They spawn tornadoes. That's right.

CHAIRMAN POWERS: And we have on this site a peculiar railway for the offsite power. What is your response?

MEMBER STETKAR: The same thing. I'd certainly want them in the PRA.

CHAIRMAN POWERS: Would you treat them -- would you treat the hurricane and, consequently, the tornado frequency as an uncertain feature of the PRA and try to quantify the magnitude and the uncertainty?

MEMBER STETKAR: I would try to do that; yes.

CHAIRMAN POWERS: I mean, my perception is that people have predicted frequencies for hurricanes, and I presume one can provide frequencies of tornadoes, and the two schools of thought I spoke of have different degrees --

MEMBER STETKAR: Right. And you can

assign uncertainties based on those schools of thought. Indeed. And indeed in some studies, that type of analysis has been done. Even trying to project out into the future.

CHAIRMAN POWERS: That's exactly what we do on seismic right now.

MEMBER STETKAR: Right.

CHAIRMAN POWERS: And so we come out with seismic hazard curves. Instead of seismic hazard curves, we come out with deleterious tornado curves, or something. I don't know --

MEMBER STETKAR: Yes. I mean, the good news is at least here, in tornado and hurricane land, we at least have a reasonable library of historical data, even site-centered historical data, to somewhat anchor that thought process better than --

CHAIRMAN POWERS: Yes. We're in vastly better shape here because we have extremely good data for -- back to 1750 on hurricane frequencies on the Atlantic Coast. So I mean, yes, the bands are not going to --

MEMBER STETKAR: The uncertainty bands --

CHAIRMAN POWERS: -- the uncertainty bands are going to be totally driven by this prognostication of the future, and I just don't know -- I don't know

how to do it and how to handle it here. So like I said, I will kick it into the hands of the technically superb staff, and they can tell me about this. But I think it's going to come up again.

Any other questions for the presenters?

MEMBER RYAN: No, sir.

CHAIRMAN POWERS: You have none?

I want to pose a question to the subcommittee, and perhaps we will reserve answers, answering this question until after we've heard from our next speaker. And that is John's raised this issue about the use of the NUREG/CR-2300 value in these analyses of flooding, turbine building flooding, and their relatively geriatric and questionable nature.

Is this an issue -- it's a generic issue. It, as I see it right now, is not a question for -- peculiar to Calvert Cliffs. It's a generic issue that we ought to bring to the ACRS's attention and try to understand further what the data are that constitute this recommended number.

And is there a better number that could be formulated? I mean, I don't --people have to use what they have in the processes that are used for this RCOLA, and I don't raise questions about that so much

as the more generic question of, okay, people are going to use this number because that's the number that they have available, and they can't invent it out of whole cloth and here it is.

But, quite frankly, I know that at the time NUREG/CR-2300 was written, we were not particularly sensitized to the issue of floods. And in fact we only got sensitized to the issue of floods after we did the IPEEE in connection, and a very good engineer at Oconee thought about floods carefully and said, whoops, I've got a problem.

And then subsequently other information's been generated. I also know that the information generated in the particular 2300 was, you know, based on LERs and reportable floods, whereas flood frequency -- I mean, a lot of floods just don't get reported. And in fact what's reported in LER as a flood you might not actually think is a flood.

And so I pose that question to the committee, and we may choose to answer that later.

(Coughing.)

MEMBER STETKAR: You've choked me up, Dr. Powers. I think it is -- and it is it's generic. I mean, it's not directly relevant to this particular proceeding. But I think there are a number of areas

where, as you describe them, geriatric type numbers --

CHAIRMAN POWERS: Oh, I'm extremely familiar with geriatric topics.

MEMBER STETKAR: -- and methods are floating around. They're being used to support PRA analyses, screening analyses. I think it is an issue. We've talked about a couple of others, in other subcommittee meetings, where it may be time for the agency to revisit some of those values that are still trudging around in NUREGs and Reg Guides and methods and things like that, especially in the area of things like external events, flooding. Fires is a little bit better only because of the more recent --

CHAIRMAN POWERS: It's gotten --

MEMBER STETKAR: It is a -- recent attention. But the issue of flooding events, internal flooding events, and certainly the whole issue of external events, I think, does make sense. But, again, it's a generic question that we should probably discuss either as a committee, or a PRA subcommittee, or something like that.

CHAIRMAN POWERS: Why don't we -- well, we're certainly going to listen to the next speaker, but maybe we should formulate a note to the P&P Committee and ask them if this is not an issue that

they should consider addressing. I mean, part of our job is to gather relevant information, and it doesn't really have to be specific to the task before us. But if it's one that emerges, that looks like it's something that we ought to have more information about, especially it is my perception that these advanced plants have become incredibly safe with respect to the classic internal initiators that we consider, and now it's all these ancillary things that were, oh, by the way, in the past because the internal event frequencies were high enough that you weren't concerned about them.

Now these things are emerging as more of a concern. Maybe we can -- a note to send to P&P and let -- we'll kick the ball over into their court and let them handle it.

MEMBER SHACK: Just to be fair to the staff, though, I mean, the COL applicant concluded that was a bounding thing. The staff just said it was reasonable and it didn't have a significant impact on the results and insights for the PRA at the COL stage, which is a more prudential statement.

MEMBER STETKAR: That's okay. It is, but, again, I'll come back to the fact that the staff has made the determination that the COL -- that the design

PRA is, indeed, a bounding PRA, so --

MEMBER SHACK: Well, that's not what it says here.

MEMBER STETKAR: It doesn't say for that particular line item, but the overarching is that the PRA is a bounding PRA. So the question is, is the staff confident that that frequency, not as reasonable and as a small contributor, but, indeed, as a bounding frequency based on the available generic information they have available at their --

CHAIRMAN POWERS: Again, my concern has nothing to do with this RCOLA, or the Certification. It is a generic issue. I have no reason to doubt the statements made in the -- by the applicant here. He's confident that he's done a bounding -- that the number is bounding for his case. He knows his plant far better than I do. He will get a chance to correct his statement, if he's wrong, prior to fuel load. I'm concerned more in a generic sense, where it gets used elsewhere, even in existing plants.

So I'm not putting any burden on -- I mean, you guys aren't going to be the ones that are going to respond to this, it's going to be somebody else, and whatnot.

Okay. We do have another speaker on our

agenda. I think he's going to have to provide us a very detailed introduction on why he's qualified to speak before this august body before we listen to a word he has to say, otherwise.

Mr. Stetkar.

MEMBER STETKAR: Good heavens. I'm qualified to speak because I was the only member who would do this. What more do you want?

MEMBER RYAN: Sounds good enough to me.

MEMBER STETKAR: Look up my CV. It's somewhere.

CHAIRMAN POWERS: Well, let me just interrupt. Thank you very much.

MR. CARNEAL: Thank you.

MEMBER STETKAR: What I want to do is we have a somewhat out-of-the-ordinary exercise that I participated in for two and a half days, April 21st to the 23rd of this year, where, because the PRA itself -- and by the PRA I mean the actual models and the physical PRA models. The event trees are submitted in Chapter 19, but the fault trees and a lot of the supporting analyses are not because they're not available to us. It's difficult for us, as a subcommittee, to draw any independent conclusions regarding the technical quality of the PRA or its

adequacy to support any of the conclusions that are drawn.

And that's one of our roles, is to not just look at the staff's review, and it's something that we do routinely when we have the information available.

Since the information wasn't available, I had a meeting with the AREVA PRA team, and, first of all, before I talk about the details of the meeting, I'd really like to honestly thank the AREVA folks for just being tremendously cooperative.

They came down here with their models on a computer. They had precisely the right people who came. We had a wonderfully open technical interchange, shared information. It was just a really, really good experience, and I know it was difficult for them to support logistically. I know that they weren't quite sure what they were getting into when they started.

So I just would like to really, really express my appreciation to AREVA for doing that. Honestly, it really --

CHAIRMAN POWERS: What kind of a lunch did they buy for you anyway?

(Laughter.)

MEMBER STETKAR: They cannot buy me lunch and I -- no. It was really good, and I honestly really, really appreciate that. I think that it was -- there is no way, independently, if I had been given -- even if I had been given the model on a computer, there's no way I could have done what I did as efficiently, and there's certainly no way that I could have done that if I just had stacks and stacks of printouts of fault trees.

We had the person who was the puppet-master, if I can qualify it that way, of the model, so he knew how to navigate through the model immediately to show me things I was asking about. It was very good.

Why did I do that? Well, as I said, it was basically an effort to develop an independent sense of confidence, if nothing else, in the quality and level of detail in the PRA. In other words, the PRA has presented numerical results and contributors to support both the DCD and, now, the COL since it's been adopted, and for us, as a subcommittee, to gain confidence that, indeed, those are reasonable assessments of the risk of this plant, without being unduly influenced by either the staff's review or AREVA's presentation. I thought this was a worthwhile

exercise.

So I spent two and a half days. A single person doing a two-and-a-half day spot check, and I'll call it that -- I will not call it a review because it was not a review.

A single person doing a two-and-a-half day spot check of bits and pieces of the model certainly is not a full review of the PRA, in any way, shape, or form. So take anything that I have to say within that context. And that's an important context.

What I did do is I selected, for a context, five nominal event scenarios. And they were not selected at random. They were selected to examine specific parts of the model that had been troublesome in the past, both horizontally, if I can characterize it that way -- it's kind of a three-dimensional matrix. Horizontally, in the sense of different categories of initiating events. Horizontally, in the sense of Level 1 straight through Level 2 models.

And then vertically, using those scenarios as a context for mining down selectively into some of the details of the fault tree models to understand whether or not they're constructed to support the context of those scenarios, and also a more generic sense of what is modeled, what is not modeled. I find

that a fairly useful type of format to do these kind of spot checks rather than trying to just take a look at a generic event tree, for example, the loss of offsite power, loss of feedwater event tree, and try to think about all of the possible issues of it.

So I looked at a loss of offsite power initiating event that eventually transpired to a high-pressure melt scenario because high-pressure melts are generally interesting and I wanted to make sure that, indeed, all features of that type of scenario were captured, and I wanted to understand how high-pressure melts were indeed treated as we went from the Level 1 models to the Level 2 models.

And loss of offsite power, in itself, generally presents some interesting modeling issues. I selected a steam generator tube rupture initiating event because the tube rupture models also tend to apply some quite interesting modeling and analysis challenges in terms of event timing and operator interactions.

And, of course, tube ruptures can be an important contributor to offsite releases, so I wanted to see how they were treated, again, from the Level 1 through the Level 2 models.

I selected a loss of component cooling

water initiating event, which also eventually resulted in a high-pressure melt scenario. I wasn't as concerned about the high-pressure melt aspects of it in the Level 2 models. I wanted to make sure how the Level 1 models treated interactions with support systems.

We looked at a fire initiating event, in particular, a fire in the cable floor, to see how they'd modeled fires and how they were evaluated through the modeling process.

And we looked at a loss of component cooling water initiating event during a particular plant shutdown state to examine how they'd done that during shutdown. So that gives -- gave me a little bit of a sense across the different types of models, different categories of initiating events. That's basically the scope of what we looked at.

Now overall conclusions. Let me hit high-level things first, and we can go into as much excruciating detail as the subcommittee would like.

High-level conclusions. This is my personal opinion. This is not the subcommittee's, certainly not the ACRS's opinion.

The models are quite detailed. They -- is the -- if I were to be asked a question, is the level

of detail and the level of sophistication in the PRA, if I can use the term sophistication, adequate to support the conclusion that the overall risk from this plant is well below the safety goal, for example, criteria both for core damage frequency and for large release frequency? My answer to that question would be yes, it is. It's a -- for this stage of the plant design, it's a very well-developed, detailed PRA.

CHAIRMAN POWERS: You're saying that if one attempted to do analyses necessary to compare the risk of this plant to the safety goals, the model is adequate to do that, because they certainly have not done those analyses?

MEMBER STETKAR: I didn't quite go that far. I'm talking about adequate to support confidence in a margin, where that margin is not a precisely-defined numerical value. For example, the -- let me go on a little bit further to try to explain what I'm talking about.

CHAIRMAN POWERS: Okay.

MEMBER STETKAR: Do I have any confidence that, indeed, the published core damage frequency and large release frequency are the actual core damage frequency and large release frequency for this plant? No. I don't. I don't.

CHAIRMAN POWERS: Of course not.

MEMBER STETKAR: In fact there's reasonable evidence, at least even in the limited stuff that I looked at, to say that it's quite likely that they're optimistic.

CHAIRMAN POWERS: Yes.

MEMBER STETKAR: How optimistic -- and I'm going to ignore the seismic issue completely for the moment because they've not quantified seismic. How optimistic? I can't make that type of determination. There's been -- I have examples, specific examples, where I think I've identified sources of optimism, both in the Level 1 model and the Level 2 model, that would make those numbers increase.

How much do I think they would increase? I don't think that they would increase by an order of magnitude, either one of them, the large release frequency or the core damage frequency. They might come close to an order of magnitude. But that still gives me ample margin below those -- the safety goal values.

CHAIRMAN POWERS: No, you can't -- they simply have not done the analyses to compare to the safety --

MEMBER STETKAR: That's true.

CHAIRMAN POWERS: Okay. What you're saying is -- I mean, you're saying that they're not going to increase by an order of magnitude, says something but --

MEMBER STETKAR: That says something. But, again, what I'm going for here is that as a committee or as an agency I think that we have to be sensitive to two things, and that is, what is the PRA being used for?

That in the design stage, it's being used, as best as I can tell, for a couple of different purposes. One purpose is to gain some confidence about where the risk of this particular design is, relative to our current fleet of operating plants and relative to the safety goals, without being too quantitative about that comparison.

And my conclusion regarding the quality and level of detail in the PRA, for that purpose, is that it's adequate to gain that confidence, that, indeed, it can be used for that purpose, and the overall conclusions are justified, without being very, very precise about the numbers.

Okay. The second important use of the PRA, at least in this particular design center -- and I'm not going to talk about severe accident management

because it's a separate issue.

CHAIRMAN POWERS: Yes. It's somebody else's issue.

MEMBER STETKAR: So I'll keep within what we've been talking about. The second use of the PRA is to populate the lists that are used for the Reliability Assurance Program.

We've had presentations on Chapter 17, and there seems to be, at the current time, some uncertainty about how those Reliability Assurance Program lists will be characterized at the point of COL issuance.

I've heard -- I believe in the presentation for Chapter 15 we heard that at the moment they're characterized at only the system level, which is fine. I've heard concepts that perhaps they might be characterized at not the system level but at the sub-system level, for example, flow paths, trains, or something like that.

That doesn't exist right now. That's simply something I've heard. I've also heard that they might be characterized at the level of detail of individual components and failure modes. For example, a reliability of a particular valve failing to open on demand might be the level of detail in the Reliability

Assurance Program list.

Now with regard to the PRA, quality and level of detail to support that type of use of the PRA, can it be used to identify systems that are -- should be on the Reliability Assurance Program list? Absolutely, it can. Absolutely, without a doubt. No problem at all. I'm even confident enough -- and, again, this is personal confidence -- I'm even confident enough that it can be used to identify sub-system on the level of flow paths and trains.

Can it be used to identify individual components or even a subset of that down to individual failure modes for those components? No. It cannot. The reason for that is there are too many assumptions that are put in the PRA, both potentially optimistic and known conservative assumptions that will, indeed, skew the risk importance measures, such that if you are trying to identify individual components, or even, at a lower level, specific failure modes, based on very, very specific risk-importance measures of a Fussell-Vesely importance greater than .005 or a Risk Achievement Worth of greater than 2.000. I would be concerned about using those very, very strict numerical criteria at that level of detail, at the current moment.

I think it's -- could you identify large pumps and diesel generators? Well, yes, you could, but --

CHAIRMAN POWERS: You can do that without --

MEMBER STETKAR: But you can do that with -- but going down to identify a particular motor-operated valve, let's say, in a particular flow path, and the fact that it does not need to be on the importance list because its Risk Achievement Worth is 1.995 and its Fussell-Vesely importance is .0045 for any failure mode that could be modeled, is something that the current PRA can't be used for.

So that's a caution in terms of the level of detail that will be developed in those Reliability Assurance Program lists and how the PRA will be used to support that. And in terms of high level, I think that's pretty much all I wanted to say as far as getting things on the record.

Now I'm certainly willing to talk about more specific details of things that I looked at. It's pretty much -- this is a report for the subcommittee.

CHAIRMAN POWERS: Right.

MEMBER STETKAR: It's the Subcommittee's

members, what do you want to hear?

CHAIRMAN POWERS: Yes. Are you going to provide us a written report?

MEMBER STETKAR: I can provide you a written report.

CHAIRMAN POWERS: Why don't you do that.

MEMBER STETKAR: I will do that.

CHAIRMAN POWERS: I think that would be of interest. I think the -- to my mind, the outcome of our first meeting on Chapter 19 was an interest in doing just exactly what you have done, to pursue a few things in some detail, and it sounds like, that you have done that.

MEMBER STETKAR: Yes.

CHAIRMAN POWERS: And that we have benefitted greatly from that.

Are there other comments people would like to make?

MEMBER SHACK: Did you look at the impact of human reliability --

MEMBER STETKAR: I did.

MEMBER SHACK: -- which is a controversial topic?

MEMBER STETKAR: I did. A couple of things that I have to mention, if we want to talk a

little bit about details.

One thing that I did not look at, and I actively did not look at this, is the underlying failure rates for equipment. The underlying human error probabilities, for example. I did not look at the human reliability analysis, at that level of detail.

I didn't look at the data analysis to see where they derived data for the failure rate for a pump. I didn't look at the initiating event frequency analyses. I probably should have, given what I've learned about the loss of offsite power. But I didn't because my basic focus was, in two and a half days, to gain some confidence about what is in the PRA and what is not in the PRA, rather than that level of detail.

That being said, one of the areas that I did pay very close attention to was the treatment, for example, of human dependencies and timing of human actions within the context of these scenarios.

I looked at that issue for the loss of offsite power model. I looked at it pretty closely for the tube rupture model because human performance tends to be quite important and through the process, from Level 1 to Level 2, because people have operator actions out in the Level 2 models that oftentimes are

completely dissociated from the same people in the Level 1 model. From what I saw, they did it wonderfully. They treated the dependencies -- now the dependencies, you can't find them in the model when you look at the model because the dependencies are treated off-line in post-processing of the cutsets.

There's a bit of a philosophical problem doing that because you only post-process the cutsets that survive above your truncation scheme. But they set the truncation values reasonably low. And in the four or five instances where I looked at and challenged them to see whether or not they had treated the dependencies, they had always treated them.

Now whether or not the numbers that were assigned for those dependencies are adequate, whether or not -- is a different issue. But, indeed, they were explicitly treated and done in a very systematic manner. But, again, offline. You can't see that by just looking at the fault trees. In fact, you can't see it by looking at the initial cutsets that the fault trees generate.

The initial cutsets generate human errors as if they are completely independent. Those cutsets are then run through a post-processor with rules, which if I were doing a detailed review of the PRA,

I'd be really interested in looking at those rules, to then determine which combinations of specific actions are coupled through a dependency model.

They did have, you know, the appropriate human actions identified for responses, you know, typical responses to events. So that was one area where I was pleasantly surprised, actually.

One thing from -- that I did identify, and I should have mentioned this earlier, from a modeling perspective, is that in the FSAR, Chapter 19 of the FSAR, as I mentioned earlier, there are not fault trees presented. However, the event trees are presented in Chapter 19 of the FSAR. Both the Level 1 event trees and the Level 2 event trees are presented.

What is not presented is what I believe -- I've been using the term bridge trees. Do you guys use the term bridge trees?

MR. REINERT: Bridge trees.

MEMBER STETKAR: Bridge trees. There are bridge trees. The Level 2 event trees are not directly linked to the end of the Level 1 event tree sequences, as you might be led to believe reading the PRA summary information.

Indeed, there's an intermediate processing that's done. Now in many cases, that intermediate

processing is an artifice of the particular software that they're using because they use an intermediate logic structure to essentially hang identification flags on specific sequences so that particular conditions can then be identified later in the Level 2 trees.

It would be the equivalent, logical equivalent, of identifying house events or boundary conditions. They've done the bookkeeping through a logic branching process. But it's -- that does not affect the sequence progression. It's simply a bookkeeping issue.

However, those bridge trees that do not appear in Chapter 19 indeed do include functional models for things. For example, they, in the loss of offsite power event tree, they include models for electric power recovery, for both in-vessel core damage mitigation and for eventual containment mitigation. So there are a couple of different electric power recovery models hidden in that bridge tree.

There are models for the operators actively depressurizing the primary system during high-pressure melt scenarios. There is a model for that in the Level 2 event tree also.

So there's a little bit of a complex information -- for example, in the loss of offsite power model, in the Level 1 tree, I have models for operators initiating bleed-and-feed cooling, which involves them opening up relief paths. In the bridge tree, I have a model for operators depressurizing the primary system, which involves them opening up relief paths, and in the Level 2 event tree, I have a model for operators opening relief paths to depressurize.

I looked at those models, and they're actually quantified correctly because once you link everything together, indeed, the model solution will come out with the right contributors.

From a review, a staff's-review perspective, I don't know whether they looked at the bridge trees because they indeed will have some -- some of those, some fraction of the initial high-pressure sequences to a low-pressure late tree.

In the tube rupture model, for example, the bridge tree for the tube rupture model has in it -- I have to be careful here. This is one I don't remember. I said I have a report, and it's a lengthy report.

Now I can't find the -- I can't find it right now. It's -- I believe it's --

MEMBER SHACK: If you were doing this electronically, John, you'd just search for "tube," and we'd find it.

MEMBER STETKAR: Well, I've got the tube, I'm -- it's -- any bridge tree for the tube rupture model, the Level 2 models differentiate between whether or not I have a scrubbed release or an unscrubbed release. The determination -- some sequences coming out of the Level 1 model, it's clear that they're not scrubbed. Those are transferred directly to the Level 2 model.

Some sequences coming out of the Level 1 model, it's actually indeterminate whether they'd be scrubbed or not. That determination is made in the bridge tree, and then subsequently, they're sent to either a scrubbed release Level 2 tree or an unscrubbed release 2.

So the message is that, indeed, there is an actual part of the entire PRA model in these bridge trees, that is not in the Chapter 19 documentation. On the other hand, none of the fault trees are in the Chapter 19 documentation either. So we know that Chapter 19's only a summary.

CHAIRMAN POWERS: I think we look forward to looking at what you had to say, but I'm going to

come out of this thinking that most of the queries that we had about the PRA at the conclusion of our first meeting with the Certification Applicant on Chapter 19 have been largely allayed.

MEMBER STETKAR: This was a real confidence-builder. It actually was.

CHAIRMAN POWERS: And that's what we're looking for.

MEMBER STETKAR: That's right.

CHAIRMAN POWERS: It was not -- I mean, it's not like we had any pointed -- we had a couple pointed questions, but that was not the purpose of this exercise.

MEMBER STETKAR: Right, right. There's still -- I mean, when you see the report, there are a lot of details here. You look at -- there are identified sources of conservatism, there are identified sources of optimism, but, again, they're focused issues, and they shouldn't necessarily, when you read the report, be interpreted as a broad statement regarding the overall quality or conclusions, which is what I'm trying to back out, at least through this presentation.

So, yes, I think you're right, Dana, that this exercise did resolve a lot of those kind of

uneasiness issues that we had at the conclusion of the subcommittee meeting.

CHAIRMAN POWERS: I don't know there was uneasiness, but it's just part of our job to have some confidence in the PRA.

MEMBER STETKAR: Yes, yes.

CHAIRMAN POWERS: And we never expected a presentation, oral presentation, in a limited amount of time, to give us that confidence. But I think that little check box -- I mean, 19 is one of our big time-consumers here, and that check box on 19 is now -- I think we can check that, and we have a couple of things in Severe Accident we'll check, and then what I'm driving for is at some point we have to tell the Certification Applicant he can move chapters from 3 to 4 -- and we need to think about doing that. So we'll go through our checks and get on with it. Very useful.

MR. WIDMAYER: Logistically, is it appropriate to addend the report to the minutes of this meeting? Is that what you want to do, or --

CHAIRMAN POWERS: Well, right now, I think I want to look at it.

MR. WIDMAYER: Right.

CHAIRMAN POWERS: And then we'll -- we may

have to append it. We'll chat as we formulate the minutes here.

MR. WIDMAYER: Okay.

MEMBER STETKAR: I think that's probably the best one. Let me circulate it to the subcommittee members and see whether you want any higher-level conclusions, for example, or whether what I have here is--

CHAIRMAN POWERS: I mean, I think anything that we write, or we suggest to the full committee to write, will be fairly high level --

MEMBER STETKAR: Yes. And that's the subcommittee. What I plan to do is submit what I have here in my hand, which, by and large, is a fairly -- the results are fairly detailed information.

CHAIRMAN POWERS: Yes.

MEMBER STETKAR: If you want higher-level information, I'd like some feedback from the subcommittee--

CHAIRMAN POWERS: Yes. I mean --

MEMBER STETKAR: -- you know, in that sense, before we --

CHAIRMAN POWERS: -- we have time to work on them.

MEMBER STETKAR: Before we take, you know,

take any formal action on this report.

CHAIRMAN POWERS: Very good. Very good. Any other comments the committee would like to make? It's becoming a tradition for all of these things -- outstanding presentations, very informative, very useful.

Sir.

MR. GIBSON: Dr. Stetkar, did you want to follow up on that one item that we had with regard to the credit for the load reduction in the PRA? Also I do have one minor correction on a particular slide we would like to make also.

MEMBER STETKAR: That would be great, if we can do it in 15 minutes, without boring the rest of the subcommittee.

MR. GIBSON: I believe we can.

MEMBER STETKAR: Okay.

MR. GIBSON: Vesna will be available --

MS. SLOAN: Can you just make sure, can you ask, make sure Vesna's on the line?

MEMBER STETKAR: Vesna, are you on the line? Theron, can we open it up the other direction. Vesna?

MS. DIMITRIJEVIC: Yes. I am on the line.

MEMBER STETKAR: State -- just for the

record, Vesna, state your name and affiliation.

MS. DIMITRIJEVIC: I'm Vesna Dimitrijevic. I'm a lead, technical lead on the EPR PRA for Design Certification.

MEMBER STETKAR: Vesna, step back a bit from the microphone because our recorder is wincing. Just -- we can hear you real well.

MS. DIMITRIJEVIC: I do have a loud voice. Very definitely. Well, I just want to confirm that there was misunderstanding in my communication with Mr. Stetkar because my interpretation of his question -- because he did ask did we model, you know, the load rejection in the PRA. My response was, no, we didn't model, and then I said but we consider it through the frequency.

MEMBER STETKAR: Yes. I didn't, I didn't make that note, Vesna. So that could have been my problem.

MS. DIMITRIJEVIC: Yes. Then I -- you said that you look in frequency, it was another ten to minus two, it look reasonable, and then we never continue on that discussion.

MEMBER STETKAR: Right. Yes. And as I mentioned, I was focusing less on numbers.

Now since you're on the line, can you --

has the load rejection capability been included anywhere else as a numerical modifier for any other initiating event frequency?

MS. DIMITRIJEVIC: Not for any other initiating event or -- but it was considered also in recovery of offsite power. So it is -- I mean, it is all included in frequencies of the offsite power, loss of offsite power and recovery of offsite power.

MEMBER STETKAR: Well, in --

MS. DIMITRIJEVIC: Not in any other initiating event.

MEMBER STETKAR: Yes.

MS. DIMITRIJEVIC: Not in any initiating event which is not related to offsite power.

MEMBER STETKAR: That was my question, in terms of initiating event.

MS. DIMITRIJEVIC: Yes.

MEMBER STETKAR: So if I were to look for the treatment of that load reject capability -- or I'd call it a plant-runback capability, the only model that that would affect would be loss of offsite power; is that correct?

MS. DIMITRIJEVIC: Right. And not model, actually, only sequence. We didn't really consider --

MEMBER STETKAR: I use model -- yes. I

use model in the generic sense as everything from initiating event frequency through all of the numbers, through, you know, logic structure. That's probably where we miscommunicated because my concept of the model is everything --

MS. DIMITRIJEVIC: Yes. That's where we miscommunicated. Yes. I just wanted to state that we didn't model configuration where the power is supplied from the generator. We just consider -- I mean, we modified frequency.

MEMBER STETKAR: Right, right. Okay. Thank you. You had one other, you said?

MR. GIBSON: Yes. We had one other. It's Slide 23.

MR. HUGHES: Yes, on Slide 23, the slide has an error in the left-hand column. It describes shutdown, loss of offsite power recovery. And it should be shutdown, loss of offsite power, non-recovery. So please make that note.

MEMBER STETKAR: Thank you.

MR. HUGHES: Actually, thank you.

CHAIRMAN POWERS: Good.

MEMBER STETKAR: Thank you.

CHAIRMAN POWERS: Any other comments anybody would care to make?

Again, I thank the staff as well for all your hard work, and I think at that point we can adjourn.

(Whereupon, at 11:48 a.m., the above-entitled matter was adjourned.)

UNISTAR NUCLEAR ENERGY

Presentation to ACRS
U.S. EPR™ Subcommittee
Calvert Cliffs Nuclear Power Plant Unit 3 FSAR Chapter 19, Probabilistic Risk Assessment and Severe Accident Evaluation
MAY 21, 2010

Chapter 19, Probabilistic Risk Assessment and Severe Accident Evaluation

Introduction

- RCOLA authored using ‘Incorporate by Reference’ (IBR) methodology.
- To simplify document presentation and review, only supplemental information, or site-specific information, or departures from the U.S. EPR FSAR are contained in the COLA.
- Eleven COL Information Items, as specified by U.S. EPR FSAR, are addressed in Calvert Cliffs Unit 3 FSAR Chapter 19.
- AREVA - ACRS Meeting for U.S. EPR FSAR Chapter 19, Probabilistic Risk Assessment and Severe Accident Evaluation, occurred on February 18-19, 2010 and April 21-23, 2010.

Chapter 19, Probabilistic Risk Assessment and Severe Accident Evaluation

Introduction

- Today's presentation was prepared by UniStar and is supported by AREVA (U.S. EPR Supplier).
  - Gene Hughes (UniStar Acting Director of PRA)
  - Josh Reinert (AREVA COLA PRA Lead)
- Gene Hughes, UniStar Acting Director of PRA, will present the Calvert Cliffs Unit 3 COLA Chapter 19, Probabilistic Risk Assessment and Severe Accident Evaluation.

Chapter 19, Probabilistic Risk Assessment and Severe Accident Evaluation

Agenda

- Calvert Cliffs 3 COLA PRA
- Update During Design and Construction, Transition to Long Term Operation
- Departures and Exemptions (COLA Part 7) and Site-Specific Features
- Internal Events
  - General Summary
  - Loss of Offsite Power (LOOP)
  - Internal Fire
  - Internal Flooding
- Seismic Margins Assessment
- External Flooding
- External Fire
- Other External Events
- Conclusion

Chapter 19, Probabilistic Risk Assessment and Severe Accident Evaluation

Calvert Cliffs 3 COLA PRA

- U.S. EPR FSAR Chapter 19 is IBR
  - Section 19.1, Probabilistic Risk Assessment
  - Section 19.2, Severe Accident Evaluations
- U.S. EPR FSAR PRA is the Calvert Cliffs 3 COLA PRA
- Calvert Cliffs site-specific features considered - Bounded
- Site-specific external events screened out
- Risk of Calvert Cliffs 3 bounded by U.S. EPR FSAR PRA

Chapter 19, Probabilistic Risk Assessment and Severe Accident Evaluation

Calvert Cliffs 3 COLA PRA

Summary of U.S. EPR FSAR and Calvert Cliffs 3 PRA Results
At-Power Events

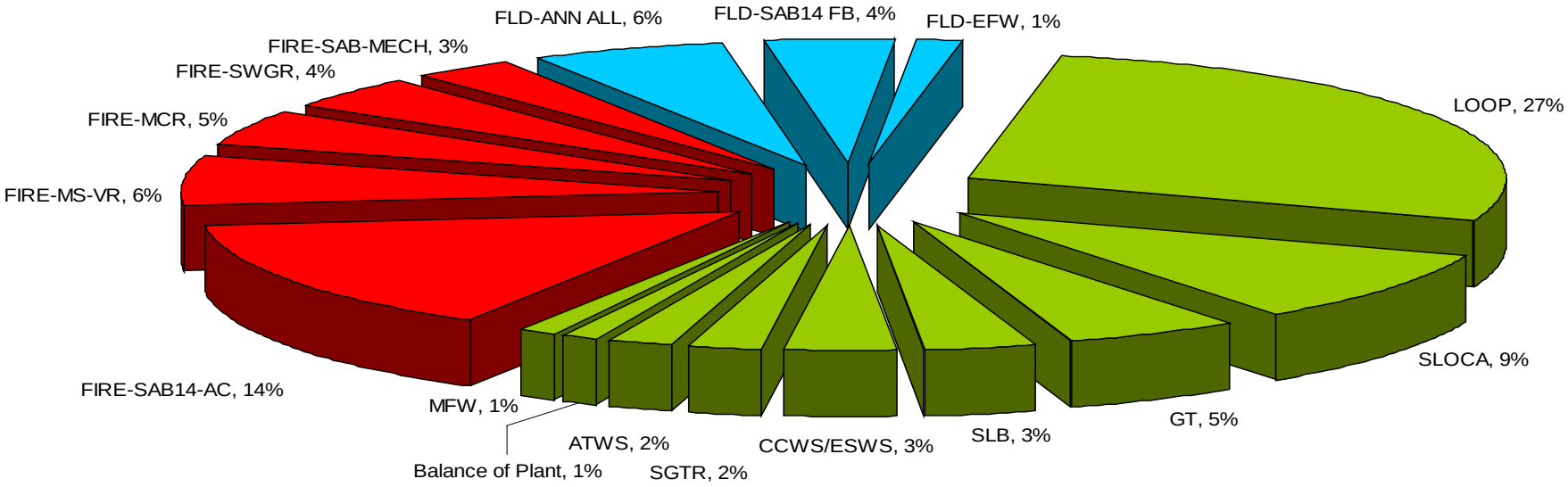

Total At Power CDF = 5.3E-07

Chapter 19, Probabilistic Risk Assessment and Severe Accident Evaluation

Calvert Cliffs 3 COLA PRA

Summary of U.S. EPR FSAR and Calvert Cliffs 3 PRA Results Shutdown Events

CA - RHR to Draindown
CB - Draindown to Head Off
D - Head Off to Cavity Flood
E - Cavity Flood to Defuel

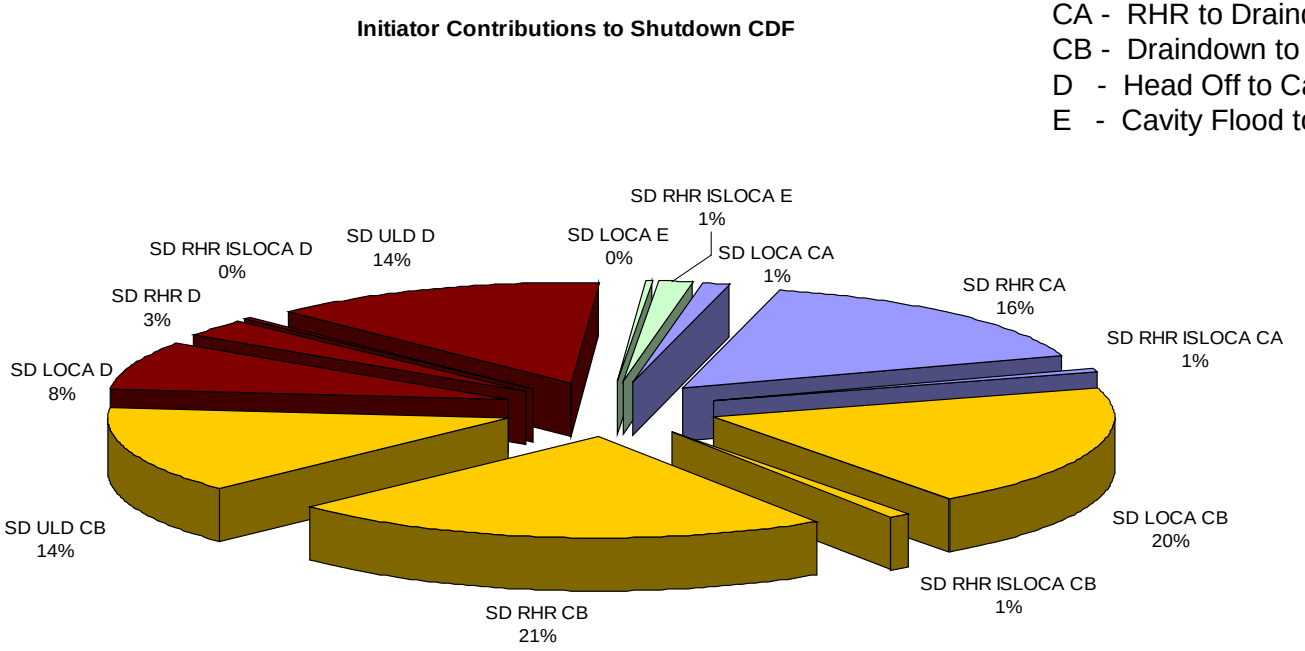

Chapter 19, Probabilistic Risk Assessment and Severe Accident Evaluation

Calvert Cliffs 3 COLA PRA

Summary of U.S. EPR FSAR and Calvert Cliffs 3 PRA Results
Large Release Frequency

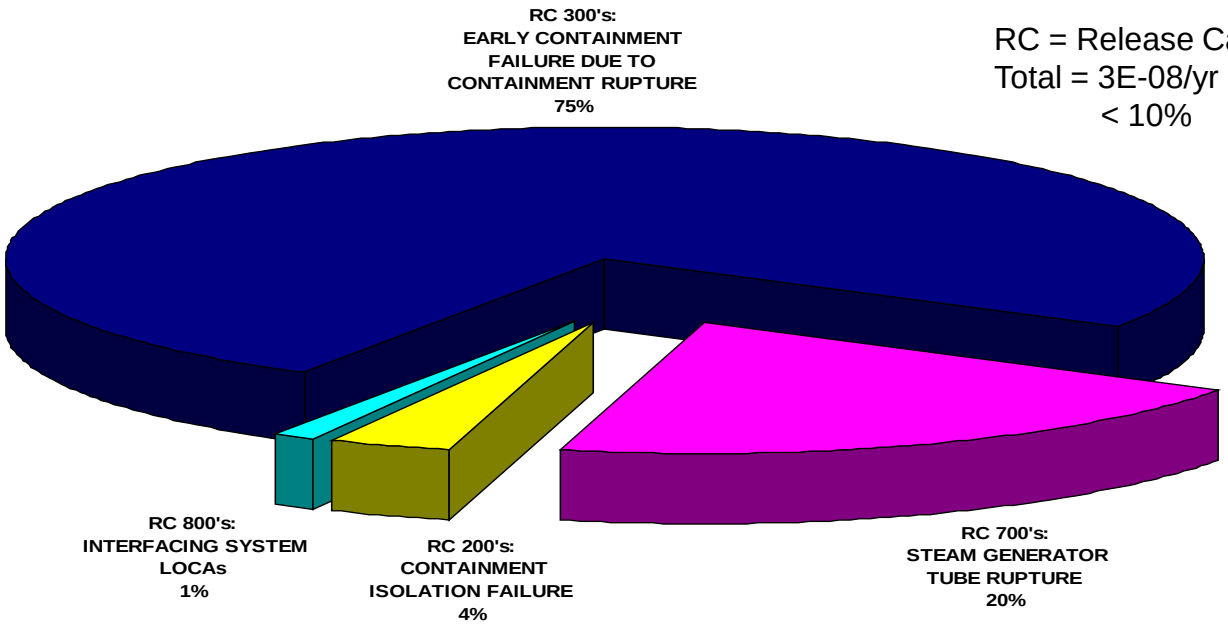

RC = Release Category
Total = 3E-08/yr
< 10%

Chapter 19, Probabilistic Risk Assessment and Severe Accident Evaluation

Calvert Cliffs 3 COLA PRA

Summary of U.S. EPR FSAR and Calvert Cliffs 3 PRA Results
Large Release Frequency For Shutdown

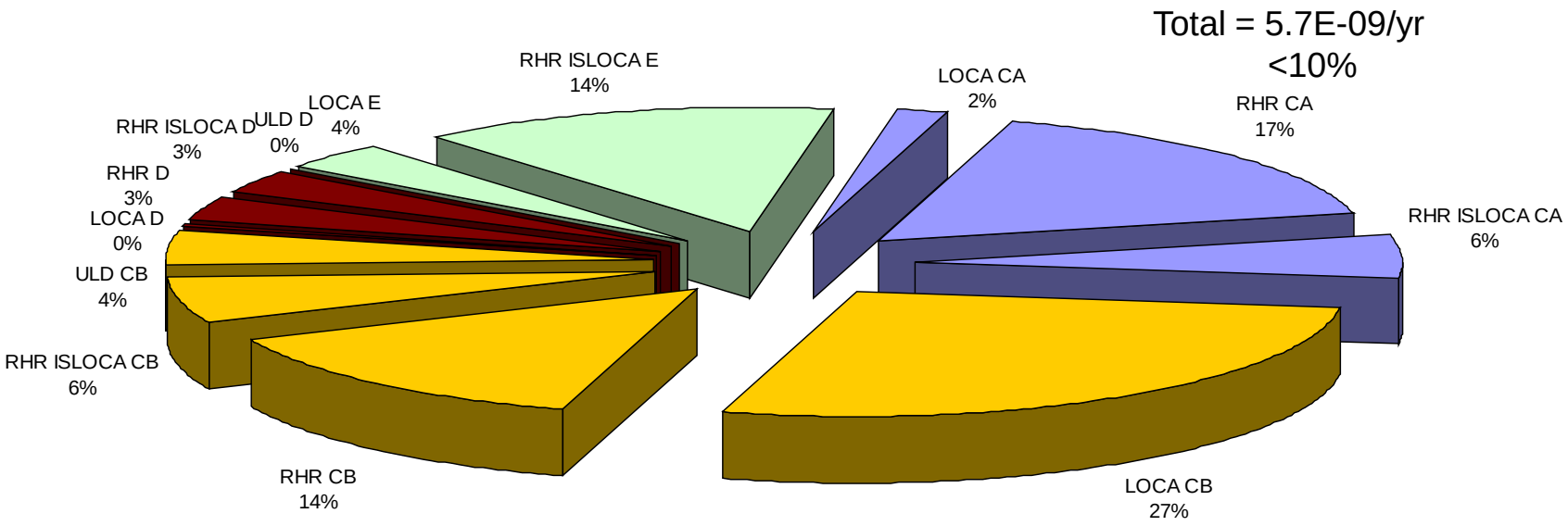

Chapter 19, Probabilistic Risk Assessment and Severe Accident Evaluation
Update During Design and Construction

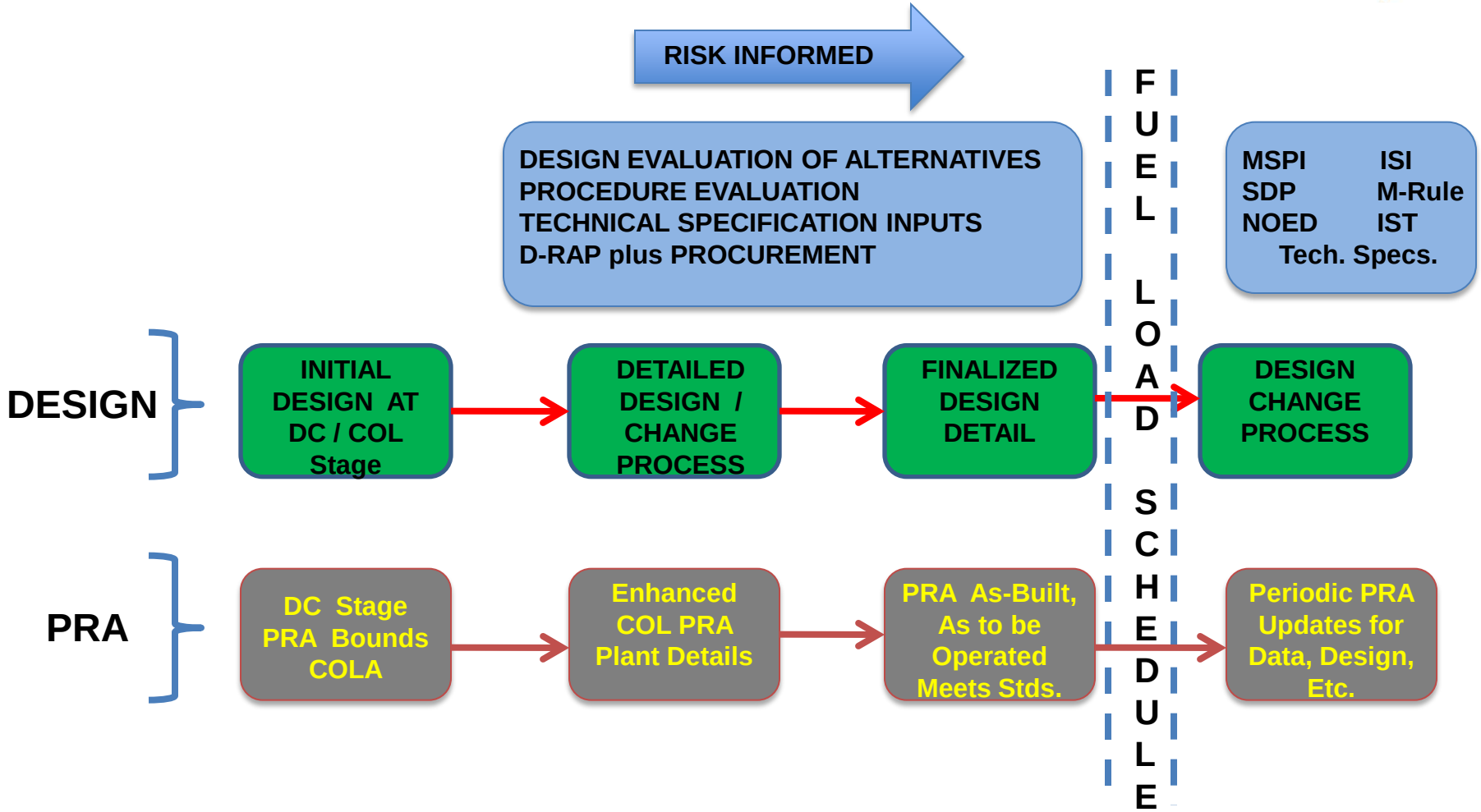

Chapter 19, Probabilistic Risk Assessment and Severe Accident Evaluation

Departures, Exemptions, Site-Specific Features

- 7 Departures from DC
- 8 Exemptions
- Calvert Cliffs 3 Site-Specific Refinements

Chapter 19, Probabilistic Risk Assessment and Severe Accident Evaluation

Departures from U.S. EPR FSAR

1. Maximum Differential Settlement (across the base-mat)
   - Structural issue not in PRA
2. Maximum Annual Average Atmospheric Dispersion Factor (0.5 mile – limiting sector)
   - Design basis issue – does not impact SAMDA
3. Accident Atmospheric Dispersion Factor (0-2 hour, Low Population Zone, 1.5 miles)
   - Design basis issue – does not impact SAMDA
4. Toxic Gas Detection and Isolation
   - System removed

Chapter 19, Probabilistic Risk Assessment and Severe Accident Evaluation

Departures from U.S. EPR FSAR

(continued)

5. Soil Shear Wave Velocity (SWV)
   - Nuclear Island meets U.S. EPR FSAR design basis SWV (1000 ft/sec)
   - ESWB soil SWV best estimate 1080 ft/sec versus 720 ft/sec limit
     - high confidence, no design problem / SMA impact under evaluation
   - EPGB soil SWV best estimate 900 ft/sec versus 630 ft/sec limit
     - high confidence, no design problem / SMA impact under evaluation

Chapter 19, Probabilistic Risk Assessment and Severe Accident Evaluation

Departures from U.S. EPR FSAR

(continued)

6. In-Structure Response Spectra (ISRS)
   - Calvert Cliffs 3 ISRS exceedance from low frequency SSE exceedance
   - Seismic margins assessment (SMA) based upon ground motion response spectrum (GMRS)
   - Calvert Cliffs 3 GMRS bounded by EPR SSE
   - No impact on SMA
7. Normal Power Supply System
   - 480V to 6.9kV cooling tower fans

Chapter 19, Probabilistic Risk Assessment and Severe Accident Evaluation

Exemptions Required

1. *Maximum Differential Settlement (across the basemat)*
2. *Maximum Annual Average Atmospheric Dispersion Factor (0.5 mile – limiting sector)*
3. *Accident Atmospheric Dispersion Factor (0-2 hour, Low Population Zone, 1.5 miles)*
4. Fitness For Duty Program – Schedule Issue, not in PRA
5. Use of M5™ Advanced Zirconium Alloy Fuel Rod Cladding
   - Included in MAAP Analysis deck / Severe Accident assessments
6. *Toxic Gas Detection and Isolation*
7. *Shear Wave Velocity*
8. Generic Technical Specifications and Bases - Setpoint Control Program – Schedule Issue, not in PRA

Chapter 19, Probabilistic Risk Assessment and Severe Accident Evaluation

Site Specific Features

- UHS Makeup Water System – Adequate capacity 72 hour plus makeup
- Circulating Water System – Evaluated and treatment confirmed
- Raw Water System, includes Essential Service Water Normal Makeup Supply – Not in PRA (no recovery action to credit Raw Water System)
- Sewage Water Treatment System – Not in PRA
- Security Access Facility, including warehouse – Not in PRA
- Central Gas Distribution System – Discussed under External Events
- Potable and Sanitary Water Systems – Not in PRA

Chapter 19, Probabilistic Risk Assessment and Severe Accident Evaluation

Site Specific Features

(continued)

- Fire Suppression Systems – Credited in Turbine Building and for RCPs
- Fire Water Supply System – Included in Flooding PRA; only credited to support Fire Suppression Systems in Fire PRA
- Site-Specific Structures
  - Turbine building
  - Switchgear building
  - Grid systems control building plus duct banks - switchyard

Chapter 19, Probabilistic Risk Assessment and Severe Accident Evaluation

Loss of Offsite Power

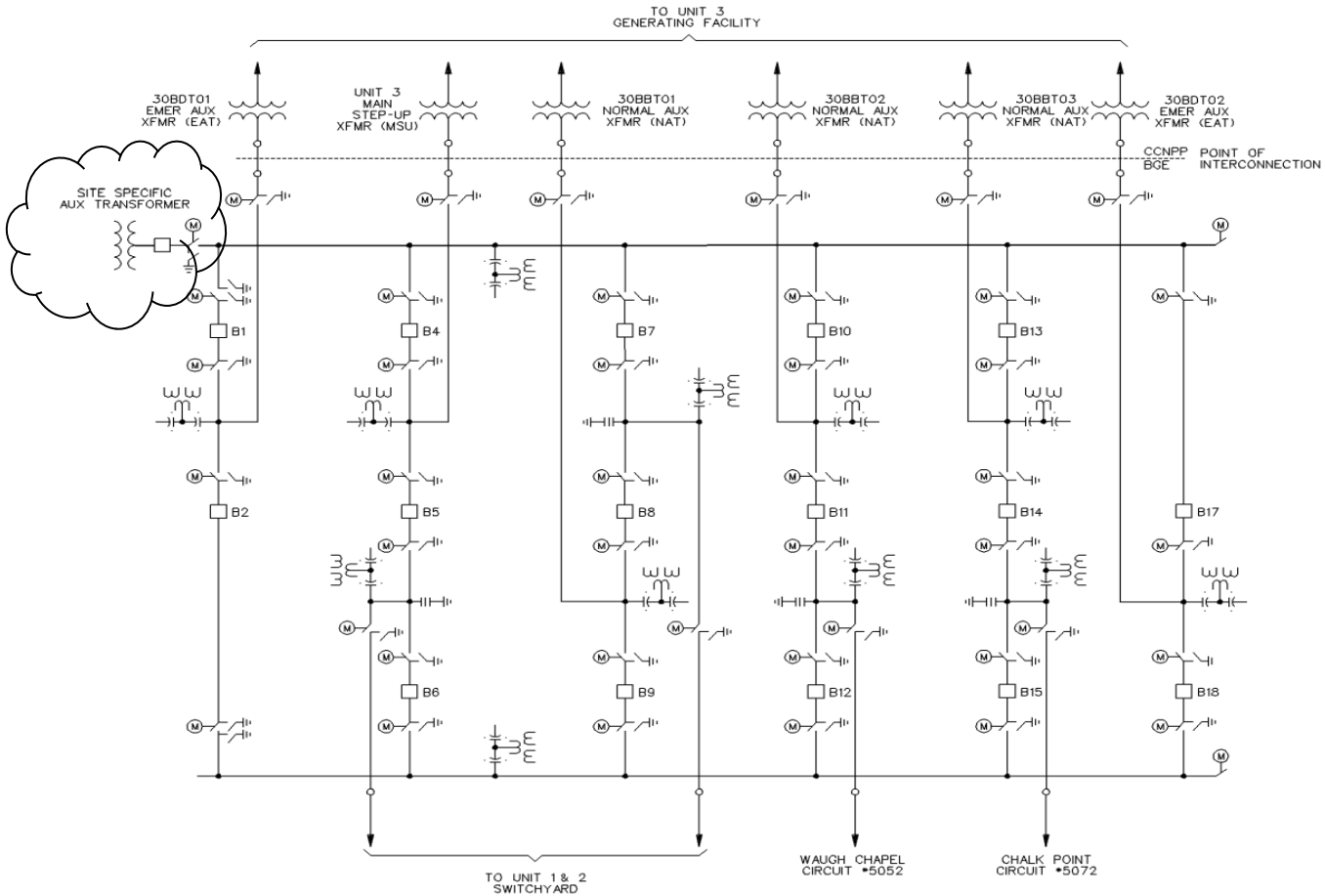

UNIT 3 SWITCHYARD

Chapter 19, Probabilistic Risk Assessment and Severe Accident Evaluation

Loss of Offsite Power

- U.S. EPR FSAR has only conceptual switchyard design
- Breaker-and-a-half scheme in conceptual switchyard design adopted in COLA – no change from U.S. EPR FSAR
- Capability for runback and supply to house loads from main generator in the event of a load rejection (Island Mode) – no change from U.S. EPR FSAR
- Site specific transformer added – plume abatement, waste water treatment, desalinization plant

Chapter 19, Probabilistic Risk Assessment and Severe Accident Evaluation

Loss of Offsite Power

Switchyard Key PRA Features

- Solid design – better to best industry practice
- Allows maximum flexibility
- No single failure will cause LOOP
- Any single component can be out of service with no disruption of power connections
- Capability for runback and supply to house loads from main generator in the event of a load rejection (Island Mode) - prevents reactor trip in such cases
- Restoration of power can rely on one of two breakers (one close coil each)
- Battery (two divisions) monitored – detail design ongoing

Chapter 19, Probabilistic Risk Assessment and Severe Accident Evaluation

Loss of Offsite Power

Table 19.1-1 CCNPP Unit 3 LOOP Frequency Derivation

LOOP Category	NUREG/CR-6890 Generic Values (/yr)	U.S. EPR Generic Values (/yr)	NUREG/CR-6890 for CCNPP Units 1 and 2 (/yr)	CCNPP Unit 3 (/yr)
Plant-centered	2.07E-3	2.07E-3	2.01E-3	2.07E-3
Switchyard-centered	1.04E-2	6.21E-3 (modified for consequential LOOP)	9.02E-3	6.21E-3
Grid-related	1.86E-2	1.86*0.32 = 5.96E-3 (modified for load rejection)	1.47E-2	1.47E-2*0.32 = 4.7E-3
Weather-related	4.83E-3	4.83E-3	3.84E-3	3.84E-3
All	3.59E-2	1.91E-2	2.96E-2	1.68E-2

Chapter 19, Probabilistic Risk Assessment and Severe Accident Evaluation

Loss of Offsite Power

LOOP Recovery - PRA Treatment (RAI 17 Response)

Table 19-1-1: At-Power LOOP Recovery Basic Events

ID	Description	U.S. EPR Value	Equivalent CCNPP Unit 3 Value
REC OSP 1HR	Failure to Recover Offsite Power Within 1 Hour	5.30E-01	5.16E-01
REC OSP 2HR	Failure to Recover Offsite Power Within 2 Hours	3.18E-01	3.07E-01
LOOP24+REC	Loss of Offsite Power During Mission Time and Failure of Recovery Within 1 Hour	4.80E-05	3.70E-05

Chapter 19, Probabilistic Risk Assessment and Severe Accident Evaluation

Loss of Offsite Power

LOOP at SHUTDOWN Event: SD LOOP24+REC

Description	U.S. EPR Value	Equivalent CCNPP
Shutdown LOOP Frequency	0.2/yr	Unit 1 = 0.183 Unit 2 = 0.184
Shutdown LOOP Recovery	0.413/event	0.413/event

Chapter 19, Probabilistic Risk Assessment and Severe Accident Evaluation

Internal Flooding

- Nuclear island unchanged from U.S. EPR FSAR – IBR
- Nuclear Island flooding treated in PRA – no changes
- BOP Challenges – Turbine Building = 3.3E-02/yr in base PRA
- Calvert Cliffs 3 qualitative evaluation confirmed treatment
  - Conservative NUREG/CR-2300 value adopted
  - Includes Circulating Water System
  - Detailed design ongoing

Chapter 19, Probabilistic Risk Assessment and Severe Accident Evaluation

Internal Fire

Internal Fire Risk Assessment Incorporated by Reference

- Nuclear Island Internal Fire – No Calvert Cliffs 3 departures
- Turbine Building Internal Fire – No Calvert Cliffs 3 departures
  - U.S. EPR FSAR design description is conceptual
    - Main Feedwater
    - Startup and Shutdown
    - Condenser
    - Circulating Water System
    - Turbine Bypass valves
    - Closed Cooling Water System
    - Auxiliary Cooling Water System
  - Calvert Cliffs 3 site-specific preliminary design consistent with U.S. EPR FSAR conceptual design

Chapter 19, Probabilistic Risk Assessment and Severe Accident Evaluation

Seismic Margins Assessment

- Seismic Margins Assessment (SMA) - IBR in entirety
- No unique plant features that impact the SMA
- Soil features
  - Shear wave velocity addressed as a departure
  - SMA impact under evaluation
  - Ground water issue addressed – no longer a departure
- Site-specific structures

  HCLPF > 1.67 X GMRS

Chapter 19, Probabilistic Risk Assessment and Severe Accident Evaluation

External Events

- High Winds and Tornado Risk Evaluation
  - High Wind Load
  - Tornado Wind Load
  - Tornado Missiles
- External Flooding Evaluation
- External Fire Evaluation
- Aircraft Crash Hazard Risk Evaluation
- Industrial and Transportation Accidents Risk Evaluation
  - Highway Hazards
  - Waterway Hazards
  - Pipeline Hazards
  - Railway Hazards
  - Nearby Facilities Hazards
- Other External Events easily screened

Chapter 19, Probabilistic Risk Assessment and Severe Accident Evaluation

External Events

<u>High Winds - Tornado Risk</u>

- Nuclear island designed for 155 mph 3-sec gust
- Non-safety structures designed to ASCE 7-05
- Failure of non-safety related structures will not impact nuclear island
- Tornado: 230 mph design basis (RG 1.76 Region 1, most severe)
  - Safety related structures meet design above
  - Non-safety structures assumed destroyed at 102 mph
  - Missile analysis also designed for Region 1
  - CDF = 5.4E-08/yr (approximately 10% of Baseline CDF)

★ Risk very, very low

Chapter 19, Probabilistic Risk Assessment and Severe Accident Evaluation

External Events

External Flooding Evaluation

- Qualitative
- Safety-related structures would not flood using FSAR Section 2 Analysis
- UHS makeup water intake structure and electrical building meet deterministic flooding protection measures (SRP 2.4.10)

★ Risk very, very low

Chapter 19, Probabilistic Risk Assessment and Severe Accident Evaluation

External Events

External Fire

- Qualitative treatment
- FSAR Section 2 analysis
- Cleared zone around the plant
- Habitability of control room protected by isolation, recirculation, operation at positive pressure, capacity for 8 people to occupy for 70 hours without makeup air, breathing apparatus

★ Risk very, very low

Chapter 19, Probabilistic Risk Assessment and Severe Accident Evaluation

External Events

Airplane Crash

- DOE Standard: STD-3014-2006 applied
  - Three target sets considered
  - CDF = 1.1E-07/yr

★ Risk level very, very low

Chapter 19, Probabilistic Risk Assessment and Severe Accident Evaluation

Offsite Hazards

Hazard	Conclusion
Highway Hazard	All too far away to impact plant
Waterway	All too far away to impact plant except for ammonia: < 5 shipments / year (50 limit for screening)
Pipeline	All too far away to impact plant
Railroads	All too far away to impact plant (railroads > 5 miles)
Nearby Facilities: • Calvert Cliffs 1, 2, & 3 • LNG Terminal	All too far away to impact plant except: • Gasoline – explosion and/or vapor release • Ammonium hydroxide Each of these have initiating event frequency < 1E-06/yr

Chapter 19, Probabilistic Risk Assessment and Severe Accident Evaluation

Conclusions

- No ASLB Contentions
- U.S. EPR FSAR PRA bounds Calvert Cliffs 3 COLA PRA
- Departures and Exemptions – Bounded by U.S. EPR FSAR PRA
- Plant Unique Features – Bounded by U.S. EPR FSAR PRA
- Risk of Calvert Cliffs 3 represented by U.S. EPR FSAR PRA
- Severe accident evaluations for Calvert Cliffs 3 represented by U.S. EPR FSAR severe accident evaluations

Acronyms

- ACRS – Advisory Committee on Reactor Safeguards
- ASLB – Atomic Safety & Licensing Board
- ASCE – American Society of Civil Engineers
- CCWS Component Cooling Water System
- CDF – Core Damage Frequency
- CFR – Code of Federal Regulations
- COL – Combined License
- COLA – Combined License Application
- CWS – Circulating Water System
- DC – Design Certification
- DOE – Department of Energy
- EDF – Électricité de France
- EFWS – Emergency Feedwater System
- EPGB – Emergency Power Generating Building
- ESW(S) – Essential Service Water (System)
- ESWB – Essential Service Water Building (Consisting of ESWCT & ESWPB)
- ESWCT(S) – Essential Service Water Cooling Tower (Structure)
- EOP – Emergency Operating Procedures
- FIRE-SAB-MECH – Fire in Safeguard Buildings, Mechanical Areas
- FIRE-SWGR – Fire in Switchgear Building
- FIRE-SAB14-AC – Fire in Safeguard Buildings 1 or 4 Switchgear Room
- FIRE-MS-VR – Fire in MFWS (Main Feedwater) / MSS (Main Steam) Valve Room
- FLD-ANN ALL – Flooding in containment annulus that disables all 4 safety trains.
- FSAR – Final Safety Analysis Report
- ESWPB – Essential Service Water Pump Building
- Fire-MCR – Fire in the Main Control Room
- FLD-EFW – Flooding from the EFW system
- FLD-SAB14 FB – Flooding in a Safeguard Building
- FSER – Final Safety Evaluation Report
- GMRS – Ground Motion Response Spectra
- GT – General Transient
- HCLPF – High Confidence, Low Probability of Failure

Acronyms

- IBR – Incorporate by Reference
- ISLOCA – Interfacing System Loss of Coolant Accident
- ISRS – In-Structure Response Spectra
- LOCA – Loss of Coolant Accident
- LOOP – Loss of Offsite Power
- LRF – Large Release Frequency
- MAAP – Modular Accident Analysis Program
- MCR – Main Control Room
- MFW(S) Main Feedwater (System)
- MSPI - Mitigating System Performance Index
- NEI – Nuclear Energy Institute
- NOED – Notice of Enforcement Discretion
- NRC – Nuclear Regulatory Commission
- OSP – Offsite Power
- PRA – Probabilistic Risk Assessment
- RCOLA – Reference COL Application
- RCP – Reactor Coolant Pump
- RHR(S) – Residual Heat Removal (System)
- SAMDA – Severe Accident Mitigation Design Alternatives
- SD – Shutdown
- SDP – Significance Determination Process
- SER – Safety Evaluation Report
- SGTR Steam Generator Tube Rupture
- SLBI – Steam Line Break Inside Containment
- SLBO – Steam Line Break Outside Containment
- SLOCA – Small Loss of Coolant Accident
- SMA – Seismic Margins Assessment
- SRP – Standard Review Plan
- SSC – Structures, Systems, and Components
- SSE – Safe Shutdown Earthquake
- UHS – Ultimate Heat Sink
- ULD – Uncontrolled Level Drop

U.S.NRC

United States Nuclear Regulatory Commission

Protecting People and the Environment

Presentation to the ACRS Subcommittee

Calvert Cliffs Nuclear Power Plant Unit 3 Combined License Application Review

Safety Evaluation Report with Open Items

General Presentation

May 21, 2010

Review Schedule
(Public Milestones)

Phase - Activity	Target Date
Phase 1 - Preliminary Safety Evaluation Report (SER) and Request for Additional Information (RAI)	April 12, 2010
Phase 2 - SER with Open Items	April 27, 2011
Phase 3 – Advisory Committee on Reactor Safeguards (ACRS) Review of SER with Open Items	July 27, 2011
Phase 4 - Advanced SER with No Open Items	January 31, 2012
Phase 5 - ACRS Review of Advanced SER with No Open Items	May 17, 2012
Phase 6 – Final SER with No Open Items	July 17, 2012

ACRS Phase 3 Review Plan

FSAR CHAPTERS GROUPED BY COMPLETION DATES

Group	Chapter(s)	Issue Date	ACRS Meeting
3A-1	8	1/6/2010	2/18/2010
3B-1	4 5 12 17	3/20/2010 3/22/2010 3/12/2010 3/19/2010	4/20/2010
3B-2	19	4/20/2010	5/21/2010
3B3, 3B4, 3B5	Remaining 13 Chapters		Meeting Dates not yet finalized

Information Incorporated by Reference

Several chapters of the COLA FSAR incorporate by reference the U.S. EPR Design Certification application, which is currently being reviewed under Docket No. 52-020.

The staff's review of the COL FSAR for the chapters or sections, which incorporate US EPR FSAR by reference, ensures that the combination of the information incorporated by reference from the U.S. EPR FSAR and the information included in the COL FSAR represents the complete scope of information relating to a specific review topic. A generic RAI 222, Question 01-5, has been issued for tracking the open item pertinent to the concurrent review of the US EPR FSAR.

Generic Open Item:

RAI 222, Question 01-5 tracks the ongoing review of the U.S EPR FSAR as an open item for all COLA chapters. This OI will be closed after the design certification is complete.

U.S.NRC

United States Nuclear Regulatory Commission

Protecting People and the Environment

Presentation to the ACRS Subcommittee

Calvert Cliffs Nuclear Power Plant Unit 3
Combined License Application Review

Safety Evaluation Report with Open Items

Chapter 19: PROBABILISTIC RISK ASSESSMENT & SEVERE ACCIDENT EVALUATION

May 21, 2010

Staff Review Team

- **Technical Staff**

  PRA and Severe Accidents Branch

  - **Hanh Phan** (Lead), Senior Reliability & Risk Engineer
  - **Edward Fuller,** Senior Reliability & Risk Engineer
  - **Malcolm Patterson,** Reliability & Risk Engineer
  - **Eric Powell,** Reliability & Risk Engineer

  Structural Engineering Branch 2

  - **Jim Xu,** Senior Structural Engineer

- **Project Managers**
  - **Surinder Arora**
  - **Jason Carneal**
  - **Prosanta Chowdhury**

Presentation Outline

Section 19.1 - Probabilistic Risk Assessment

- COL Information Items
  1) Open Items
  2) Technical Topics of Interest

Section 19.2 - Severe Accident Evaluation

- COL Information Item
  1) Open Item
  2) Technical Topics of Interest

Overview of Calvert Cliffs Combined License Application

Chapter 19 – Probabilistic Risk Assessment and Severe Accident Mitigation		
SE Section (Application Section)	**Subject**	**Number of SE Open Items**
19.1	Probabilistic Risk Assessment	6
19.2	Severe Accident Evaluation	1
	Totals	**7**
Total Number of RAIs = 6; Number of Questions = 25		

Description of SE Open Items

- **RAI 160, Question 19-19 (Seismic Accident Sequences):** requests the COL applicant provide an update to the system model developed in the U.S. EPR FSAR for the PRA-based seismic margin assessment
- **RAI 198, Questions 19-20 (External Events):** requests the COL applicant reassess external events and show in applicable cases that the resulting CDF and LRF would be significantly lower than the total baseline U.S. EPR CDF and LRF
- **RAI 198, Question 19-21 (Airplane Crash Events):** requests the COL applicant provide analysis which demonstrates that more realistic CDF and LRF resulting from the airplane crash events are significantly lower than the baseline U.S. EPR CDF and LRF
- **RAI 198, Question 19-22 (Toxic Chemical Release):** requests the COL applicant reassess the toxic chemical release accidents according to RG 1.200 screening criteria

Description of SE Open Items

- **RAI 198, Question 19-23 (Tornado Strike Frequency):** requests the COL applicant describe the basis for CCNPP Unit 3 site-specific tornado strike frequency in sufficient detail to allow the staff to confirm the conclusion drawn in the COL FSAR
- **RAI 198, Question 19-24 (Hurricanes):** requests the COL applicant describe the frequencies and potential consequences of hurricanes at the CCNPP Unit 3 site
- **RAI 241, Question 19-25 (Severe Accident Management Guidelines):** requests that the COL applicant add COL Information Item 19.2-1 to the application and to provide a schedule for implementing the severe accident management guidelines prior to fuel loading

Review Approach (General)

- Discussed plant-specific information with other technical branches
- Discussed technical issues with other NRC offices (e.g., RES and NRR)
- Ensured consistency with other COL applications
- Ensured consistency with the analyses documented in COL FSAR (e.g., Chapter 2, “Site Characteristics” and Chapter 3, “Design of Structures, Components, Equipment, and Systems”)

Review Approach (Screening)

- For the deterministic screening assessment, confirmed that:
  - The potential hazard associated with the postulated external event does not adversely affect the plant
  - The plant/site is designed to accommodate the “maximum size” of the postulated external event
- For the probabilistic screening assessment, confirmed conformance with RG 1.200 quantitative screening criteria, specifically:

  Can be shown using a demonstrably conservative analysis that the CDF and LRF is reasonably lower than the baseline risk values

COL Information Item 19.0-1

- This item directs the COL applicant to either confirm that the PRA in the DC bounds the site-specific design information and any design changes or departures, or update the PRA to reflect this information.
- The COL FSAR states that the U.S. EPR design-specific PRA bounds CCNPP Unit 3.
- The staff's conclusion on COL Information Item 19.0-1 depends on the evaluation of other areas:
  - Supplemental information provided by the COL applicant to address site-specific design information
  - Site-specific effects of seismic hazards (**open item**)
  - Site-specific external events (**open item**)

COL Information Item 19.1-1

- This item directs the COL applicant to describe the uses of PRA in support of licensee programs and to identify and describe risk-informed applications being implemented during the **COL application phase.**

- The COL FSAR states that during the COL application phase, no risk-informed applications are proposed. The uses of PRA during the COL application phase include:
  - Identifying risk-informed safety insights
  - Providing PRA importance measures
  - Gaining risk insights
  - Providing input to the procedure development process

COL Information Item 19.1-2

- This item directs the COL applicant to describe the uses of PRA in support of licensee programs and to identify and describe risk-informed applications being implemented during the **construction phase.**
- The COL FSAR states that during the construction phase, no specific PRA uses are anticipated and no risk-informed applications are proposed.

COL Information Item 19.1-3

- This item directs the COL applicant to describe the uses of the PRA in support of licensee programs and to identify and describe risk-informed applications being implemented during the **operational phase**.
- The COL FSAR states that during the operational phase, no risk-informed applications are proposed.
- The PRA will be used during this phase to support typical licensee programs such as SDP, MSPI, and the maintenance rule program.

COL Information Item 19.1-4

- This item directs the COL applicant to conduct a peer review of the PRA relative to the ASME PRA standard prior to use of the PRA to support risk-informed applications or before fuel load.

- The following statement is included as a proposed **license condition** in Part 10, Section 2 of the CCNPP Unit 3 COL application:

  A peer review of the PRA relative to the American Society of Mechanical Engineers (ASME) PRA Standard shall be performed prior to use of the PRA to support risk-informed applications or before initial fuel load.

COL Information Item 19.1-5

- This item directs the COL applicant to describe the COL applicant's PRA maintenance and upgrade program.
- The following statement is included as a proposed **license condition** in Part 10, Section 2 of the CCNPP Unit 3 COL application:

> The CCNPP Unit 3 PRA shall be treated as a living document. A PRA Configuration Control Program shall be put in place to maintain (update) or upgrade the PRA, as defined in ASME Standard RA-Sc-2007 and as clarified by RG 1.200.

COL Information Item 19.1-6

- This item directs the COL applicant to confirm that the U.S. EPR design-specific PRA-based seismic margins assessment is bounding for their specific site.
- RAI 160, Question 19-19, requested that the COLA provide an update to the system model developed in the U.S. EPR FSAR to identify and incorporate as applicable any site-specific capacity reductions due to site-specific effects (soil liquefaction, slope failure) and site-specific structures (site-specific intake structure, intake tunnel heat sink). In addition, the COLA should demonstrate the plant seismic margin (in terms of the sequence-level HCLPF capacity) to be 1.67 times the site SSE.
- The staff is currently reviewing the response. **Question 19-19 is being tracked as an open item.**

COL Information Item 19.1-7

- This item directs the COL applicant to perform site-specific screening analysis and site-specific risk analysis for applicable external events.
- The applicant addressed all external events listed in Appendix A of the ANSI/ANS 58.21-2003, "External Events in PRA Methodology," and followed the guidance in that standard as well as guidance in NUREG-1407, "Procedural and Submittal Guidance for the Individual Plant Examination of External Events (IPEEE) for Severe Accident Vulnerabilities."

COL Information Item 19.1-7 (Continued)

- RG 1.200, Section C.1.2.5, states

  It is recognized that for those new reactor designs with substantially lower risk profiles (e.g., internal events CDF below 1E-6/year), the quantitative screening value should be adjusted according to the relative baseline risk value.

- RAI 93, Question 19-13 and follow-up RAI 198, Question 19-20, requested that the COL applicant reassess the external events using an appropriate PRA screening value, or quantitatively justify that when all conservatisms are removed from the analysis, the resulting CDF and LRF would be significantly lower than the total baseline U.S. EPR CDF and LRF.

- **Question 19-20 is being tracked as an open item.**

COL Information Item 19.1-8

- This item directs the COL applicant to describe the uses of PRA in support of site-specific design programs and processes during the design phase.
- The COL FSAR states that during the design phase, no additional PRA-related design activities are anticipated for CCNPP Unit 3.

Review Approach (Internal Events)

- Confirmation that site-specific and plant-specific features are consistent with assumptions of the EPR PRA at design certification
  - Loss of offsite power (LOOP)
    - Frequency
    - Recovery
  - Balance-of-plant systems (e.g., circulating water)
- Confirmation that PRA insights and assumptions are preserved.

COL Information Item 19.1-9

- This item directs the COL ***applicant*** to review as-designed and as-built information and conduct walk-downs as necessary to confirm that the assumptions used in the PRA (including PRA inputs to RAP and SAMDA) remain valid. However, this activity cannot be completed prior to licensing and construction.

- The following statement is part of a proposed **license condition** in Part 10, Section 2 of the CCNPP Unit 3 COL application:
  - As-designed and as-built information shall be reviewed, and walk-downs shall be performed, as necessary, to confirm that the assumptions used in the Probabilistic Risk Assessment (PRA)… remain valid….

COL Information Item 19.2-1

- A COL applicant that references the U.S. EPR design certification will develop and implement severe accident management guidelines prior to fuel loading using the operating strategies for severe accidents (OSSA) methodology described in U.S. EPR FSAR Tier 2, Section 19.2.5.
- The staff is currently reviewing the response. **Question 19-25 is being tracked as an open item.**

ACRONYMS

- **ASME -** American Society of Mechanical Engineers
- **CDF -** core damage frequency
- **CFR -** Code of Federal Regulations
- **COL -** combined construction permit and operating license
- **DC -** design certification
- **EPRI -** Electric Power Research Institute
- **HCLPF -** high-confidence-and-low-probability-of-failure
- **LOOP -** loss of offsite power
- **LRF -** large release frequency
- **OSSA -** operational strategies for severe accidents
- **PRA -** probabilistic risk assessment
- **RAI -** request for additional information
- **SAMDA -** severe accident mitigation design alternatives
- **SE -** safety evaluation
- **SMA -** seismic margin assessment