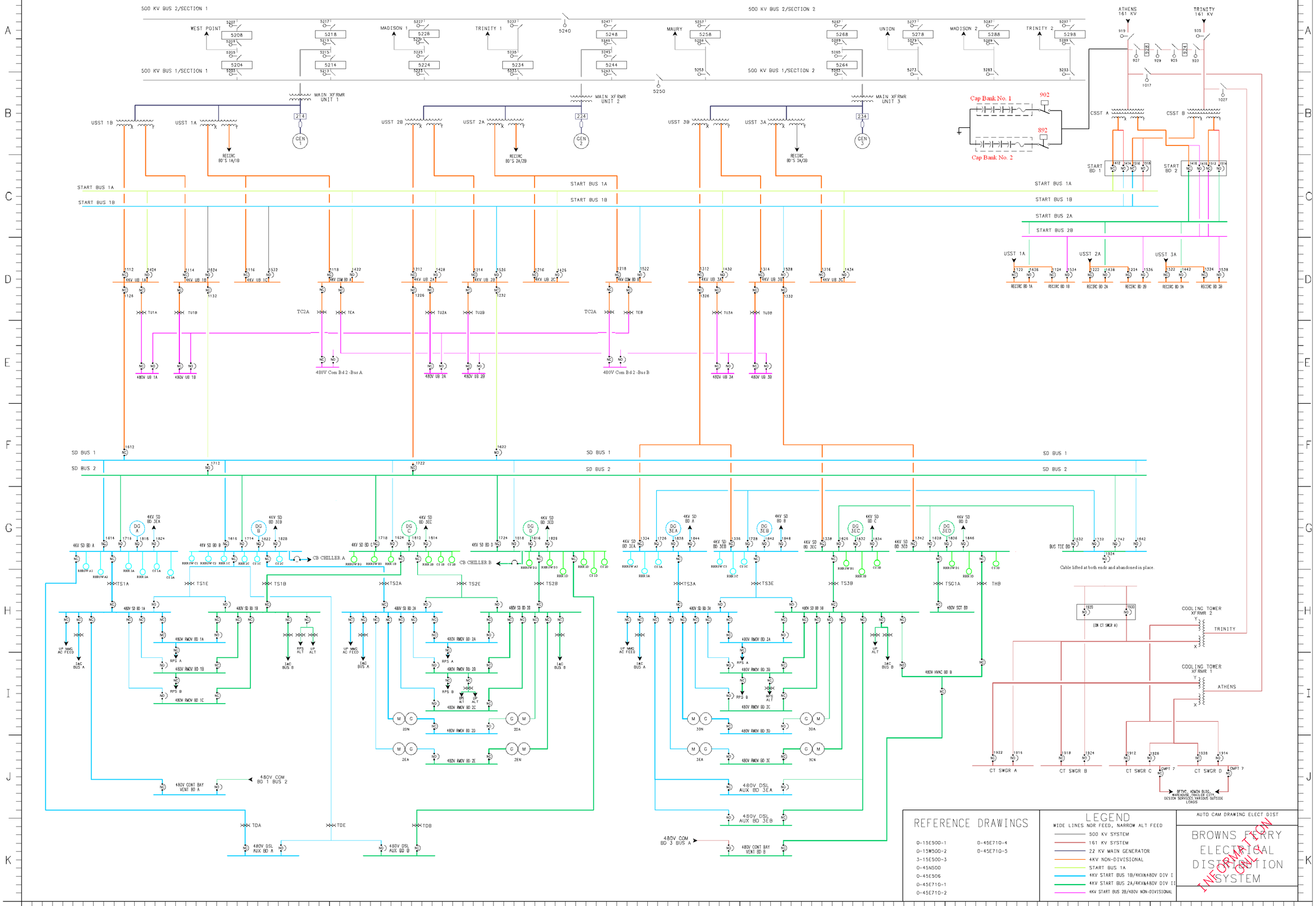
500 KV BUS 2/SECTION 1
500 KV BUS 1/SECTION 1
500 KV BUS 2/SECTION 2
500 KV BUS 1/SECTION 2
WEST POINT
MADISON 1
TRINITY 1
MAURY
UNION
MADISON 2
TRINITY 2
ATHENS 161 KV
TRINITY 161 KV
MAIN XFRMR UNIT 1
MAIN XFRMR UNIT 2
MAIN XFRMR UNIT 3
USST 1B
USST 1A
USST 2B
USST 2A
USST 3B
USST 3A
CEN 1
CEN 2
CEN 3
RECIRC BD'S 1A/1B
RECIRC BD'S 2A/2B
RECIRC BD'S 3A/3B
Cap Bank No. 1
Cap Bank No. 2
CSST A
CSST B
START BD 1
START BD 2
START BUS 1A
START BUS 1B
START BUS 2A
START BUS 2B
4KV UB 1A
4KV UB 1B
4KV UB 1C
4KV COM BD A
4KV UB 2A
4KV UB 2B
4KV UB 2C
4KV COM BD B
4KV UB 3A
4KV UB 3B
4KV UB 3C
TC2A
480V Com Bd 2-Bus A
480V Com Bd 2-Bus B
480V UB 1A
480V UB 1B
480V UB 2A
480V UB 2B
480V UB 3A
480V UB 3B
SD BUS 1
SD BUS 2
DG A
DG B
DG C
DG D
DG 3EA
DG 3EB
DG 3EC
DG 3ED
4KV SD BD 3EA
4KV SD BD 3EB
4KV SD BD 3EC
4KV SD BD 3ED
4KV SD BD A
4KV SD BD B
4KV SD BD C
4KV SD BD D
CB CHILLER A
CB CHILLER B
BUS TIE BD
Cable lifted at both ends and abandoned in place.
480V SD BD 1A
480V SD BD 1B
480V SD BD 2A
480V SD BD 2B
480V SD BD 3A
480V SD BD 3B
480V SDT BD
480V RMOV BD 1A
480V RMOV BD 1B
480V RMOV BD 1C
480V RMOV BD 2A
480V RMOV BD 2B
480V RMOV BD 2C
480V RMOV BD 2D
480V RMOV BD 2E
480V RMOV BD 3A
480V RMOV BD 3B
480V RMOV BD 3C
480V RMOV BD 3D
480V RMOV BD 3E
480V HVAC BD B
480V CONT BAY VENT BD A
480V CONT BAY VENT BD B
480V COM BD 1 BUS 2
480V COM BD 3 BUS A
480V DSL AUX BD A
480V DSL AUX BD B
480V DSL AUX BD 3EA
480V DSL AUX BD 3EB
COOLING TOWER XFRMR 2
COOLING TOWER XFRMR 1
TRINITY
ATHENS
CT SWGR A
CT SWGR B
CT SWGR C
CT SWGR D
REFERENCE DRAWINGS
0-15E500-1
0-15W500-2
3-15E500-3
0-45N500
0-45E506
0-45E710-1
0-45E710-2
0-45E710-4
0-45E710-5
LEGEND
WIDE LINES NOR FEED, NARROW ALT FEED
500 KV SYSTEM
161 KV SYSTEM
22 KV MAIN GENERATOR
4KV NON-DIVISIONAL
START BUS 1A
4KV START BUS 1B/4KV&480V DIV I
4KV START BUS 2A/4KV&480V DIV II
4KV START BUS 2B/480V NON-DIVISIONAL
AUTO CAM DRAWING ELECT DIST
BROWNS FERRY ELECTRICAL DISTRIBUTION SYSTEM
INFORMATION ONLY
ELECT DIST 9-25-02