PMSTPCOL NPEmails

From: Chappell, Coley [ccchappell@STPEGS.COM]
Sent: Thursday, June 03, 2010 10:13 PM
To: Wunder, George; Wunder, George
Cc: Joseph, Stacy
Subject: ACRS Presentation - Action Items for 6-8-10_DRAFT
Attachments: ACRS Presentation - Action Items for 6-8-10_DRAFT.pdf

George,

Attached is a draft STP 3&4 presentation of ACRS action items, scheduled for 6/8, as requested.

Regards,

Coley Chappell
STP 3&4 Licensing

Hearing Identifier: SouthTexas34NonPublic_EX
Email Number: 3027

Mail Envelope Properties (C7F098E3C31A0141A02043F0B8E656EE2692A21F9D)

Subject: ACRS Presentation - Action Items for 6-8-10_DRAFT
Sent Date: 6/3/2010 10:12:36 PM
Received Date: 6/3/2010 10:12:45 PM
From: Chappell, Coley

Created By: ccchappell@STPEGS.COM

Recipients:
"Joseph, Stacy" <Stacy.Joseph@nrc.gov>
Tracking Status: None
"Wunder, George" <George.Wunder@nrc.gov>
Tracking Status: None
"Wunder, George" <George.Wunder@nrc.gov>
Tracking Status: None

Post Office: exgmb1.CORP.STPEGS.NET

Files	**Size**	**Date & Time**
MESSAGE	159	6/3/2010 10:12:45 PM
ACRS Presentation - Action Items for 6-8-10_DRAFT.pdf	700413	

Options
Priority: Standard
Return Notification: No
Reply Requested: No
Sensitivity: Normal
Expiration Date:
Recipients Received:

DRAFT

South Texas Project Units 3 & 4 Presentation to ACRS Subcommittee

ACRS Action Items

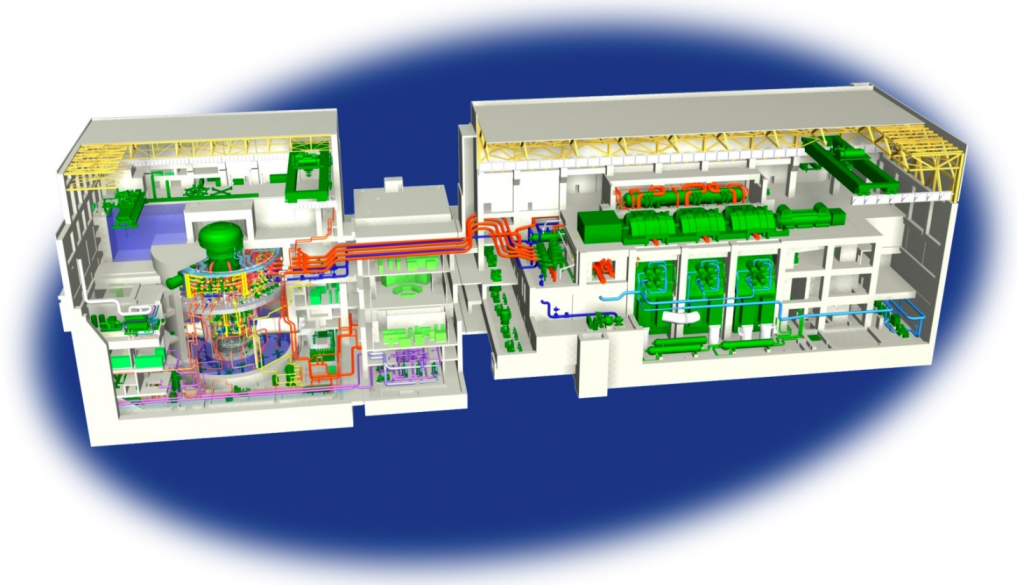

DRAFT

DRAFT

Agenda

- Review of Action Items List
- Action Items Discussion

DRAFT

DRAFT

Attendees

DRAFT

DRAFT

Review of Action Items List

No.	Action Item	Owner/s – *Status*
1	Fuel-related topical reports and fuel change (amendment to COL)	ACRS
2	Address DG qualification to 60°C, occupancy issues and HVAC changes	– *Resolved DG EQ on 3/18*; *remainder to discuss in Ch 9*
3	Part 21 reports issued on stability analysis	– *Resolved 3/18*
4	**Part 21 issues that affect the ABWR design**	**STP** / NRO
5	Deletion of MSIV closure and scram on high radiation	– *Resolved 3/2*
6	FW line break mitigation, accident is not described in Chapter 15	STP / NRO – *discuss in Ch 6*
7	Address FPGA in more detail	– ***Discussed on 5/20***
8	Address GSI-191 flow blockage (not just for fuel)	STP / NRO – *discuss in Ch 6*
9	Address underground piping carrying radioactive liquids	–
10	New GALE code	– *Resolved 3/18*
11	Disparity between presentations related to x/q values bounded by DCD	– *Resolved 3/2*
12	How specific DAC acceptance criteria are amenable to staff inspection	ACRS
13	How adding wetwell pressure indication on SPDS gives higher assurance of control room capability post accident	NRO
14	EDG qualification to increased ambient temperature	– *Resolved 3/18*
15	SER conclusion on operator ability to switch from digital MCR to analog RSS	NRO
16	Staff review of HFE	ACRS / NRO

DRAFT

DRAFT

Review of Action Items List (cont'd)

No.	Action Item	Owner/s – *Status*
17	Staff needs to formalize handling of DAC	ACRS / NRO (See #12)
18	SER open item 1-3 on aging management	ACRS / NRO
19	Comparison of occupational doses	– *Resolved 3/18*
20	**RCIC cycles during an 8 hour SBO event**	**STP**
21	Rx vessel EOL fluence value and error band	– *Resolved 3/18*
22	Consistent use of a set of units (either English or Metric) in plant documents	STP
23	RCS leakage Tech Spec limits and instrument sensitivity	STP
24	**East transmission lines capacity**	**STP**
25	**Single or double closing coils on switchyard breakers**	**STP**
26	**Switchyard control system backup battery discharge time**	**STP**
27	**Switching logic under various electrical transients**	**STP**
28	SBO rule, operator actions, and CTG startup time within 10 minutes	NRO
29	**Qualification of submerged 345 KV cables**	**STP**
30	**D-RAP list and staff review**	**STP** / NRO
31	**RAT 4.16 kV winding capability**	**STP**
32	Identification of ESF (and RPS) overlap testing, end-to-end testing	STP
33	Steam velocity numbers for STP 3 & 4	STP – *discuss in Ch 3*

DRAFT

DRAFT

Review of Action Items List (cont'd)

No.	Action Item	Owner/s – *Status*
34	Apparent discrepancy between STD DEP 7.2-2 text and Figure 7.2-8	STP
35	Cyber Security ITAAC	NRO
36	Staff to provide FIV reports for ACRS review	NRO

DRAFT

DRAFT

Action Items for Discussion

- Part 21 issues that affect ABWR design (#4)
- East transmission line capacity (#24)
- Switchyard breakers closing coils (#25)
- Switchyard control system backup battery discharge time (#26)
- Qualification of submerged 345 KV cables (#29)
- Switching logic under various electrical transients (#27)
- RAT 4.16 kV winding capability to feed PIP and safety buses (#31)
- RCIC cycles during an 8 hour SBO event (#20)
- D-RAP list and staff review (#30)

DRAFT

DRAFT

Action Item #4

Part 21 issues that affect the ABWR design.

Response: STP reviewed Part 21 reports from 1995 to the present

- Identified a total of 45 reports filed with NRC (some were supplemental to the initial filing) related to BWR issues
- Performed a preliminary review to determine potential applicability to STP 3&4
- Performed a detailed review for final determination

Part 21 issues applicable to STP 3 & 4 are the application of Stability Option III and the calculation of SLMCPR.

These are currently known and addressed in the STP 3&4 COLA.

DRAFT

DRAFT

Action Item #4 (cont'd)

Part 21 issues to be addressed for STP 3&4:

Topic / Feature	Applicable Part 21 reports	How addressed for STP 3&4
Stability Option III	2001-23, 2002-27, 2002-31, 2003-25	COLA Part 2 Section 4.4 provides a commitment (COM 4.4-3) to provide an updated Stability Option III analysis for the final fuel design selection. The supporting documentation for this COM clearly notes the Part 21 issues.
SLMCPR	1996-47, 2004-20	COLA Part 2 Section 4.4 provides a commitment (COM 4.4-2) to provide an analysis to determine the thermal limits, which includes SLMCPR. The analysis methodology addresses the full range of flows at 100% power.

DRAFT

DRAFT

Action Item #24

Confirm that the east offsite transmission lines (Velasco) are capable of supplying power to all four units' safety loads when other lines are lost.

Response: The east offsite transmission lines (Velasco) can provide power to all four units.

The load analysis was performed with all four units offline and the entire standby switchyard load (60 MW each for STP 1&2, 100 MW each for STP 3&4) being supplied by the respective circuit of the Velasco line.

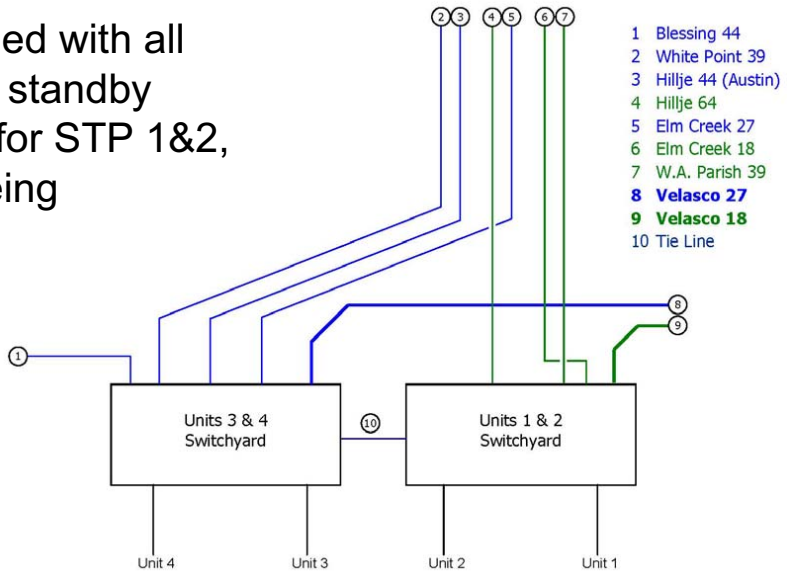

DRAFT

DRAFT

Action Item #25

State if there are single or double closing coils on switchyard breakers.

Response: The switchyard breakers have single closing coils.

DRAFT

DRAFT

Action Item #26

Provide switchyard control system backup battery discharge time.

Response: Regarding the capability of the switchyard controls to operate on the battery backup during SBO, the batteries are

- Sized to operate the switchyard DC loads for 10 hours
- Sized with a 25% aging margin and a 10% design margin
- Have an expected life of 15 to 20 years

The batteries are designed to supply 10 hours of load at the 15 year point, although the 10% design margin will allow them to last longer.

DRAFT

DRAFT

Action Item #29

Address qualification of submerged 345 KV cables.

Response: Lead sheath cable is designed for use in a wet environment.

Several industry standards and organizations acknowledge that cables with continuous metallic sheaths are impervious to water (IEEE 141, NEMA WC 71, NEMA WC 74, NFPA 70 (National Electric Code)).

For example, NEMA WC 71, 5.3.1 and NEMA WC 74 7.3.1 say:

“A lead or smooth aluminum sheath, with or without outer supplementary protection, shall be used when an impervious covering is required.”

From discussion with a transmission service provider, underground lead sheath cable which has been in service for 40 years produced test results similar to a new cable.

DRAFT

DRAFT

Action Item #27

Performance of switching logic under various electrical transients.

Response: For the loss of a UAT:

- Generator breaker and switchyard breakers for the generator OPEN.
- Source breakers from UATs to all PG buses, all PIP buses, and the Division I and II Class 1E buses OPEN.
- DGs for Divisions 1 and II START on bus undervoltage and Divisions I and II CONNECT to their respective DGs.
- Division III Class 1E bus remains energized on RAT A.
- CTG starts on loss of power (undervoltage) to two PIP buses, CTG3 bus remains energized through RAT B.
- Two pre-selected PIP buses are powered upon transfer to bus CTG3.

DRAFT

DRAFT

Action Item #27 (cont'd)

Switching logic for the loss of a UAT electrical transient:

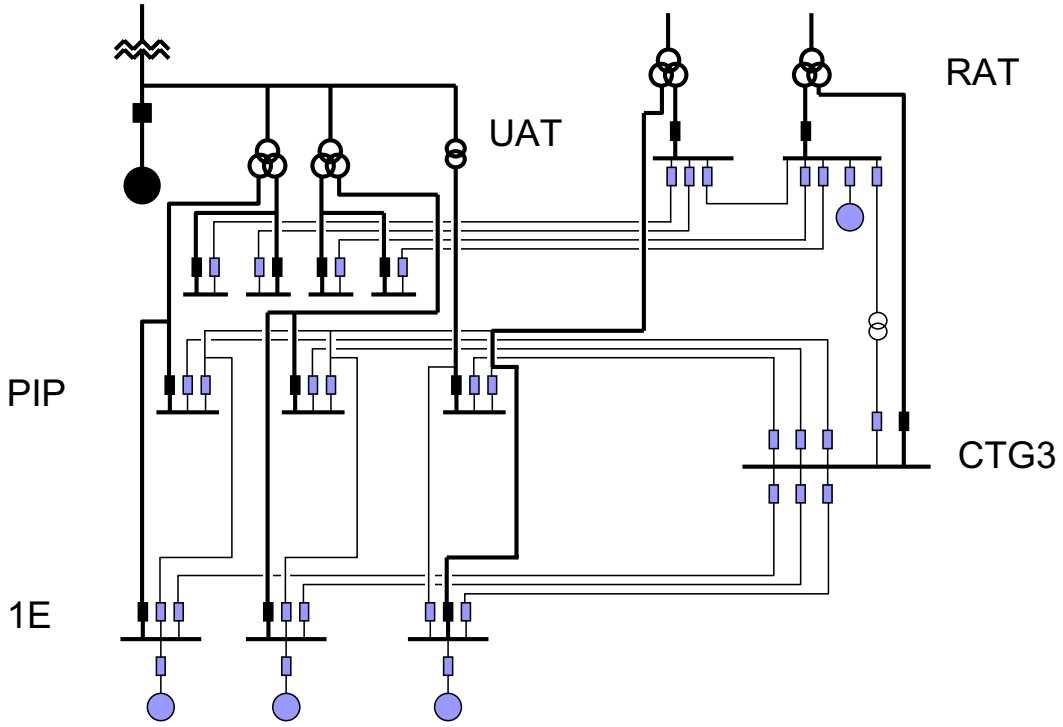

DRAFT

DRAFT

Action Item #27 (cont'd)

Switching logic for the loss of a UAT electrical transient:

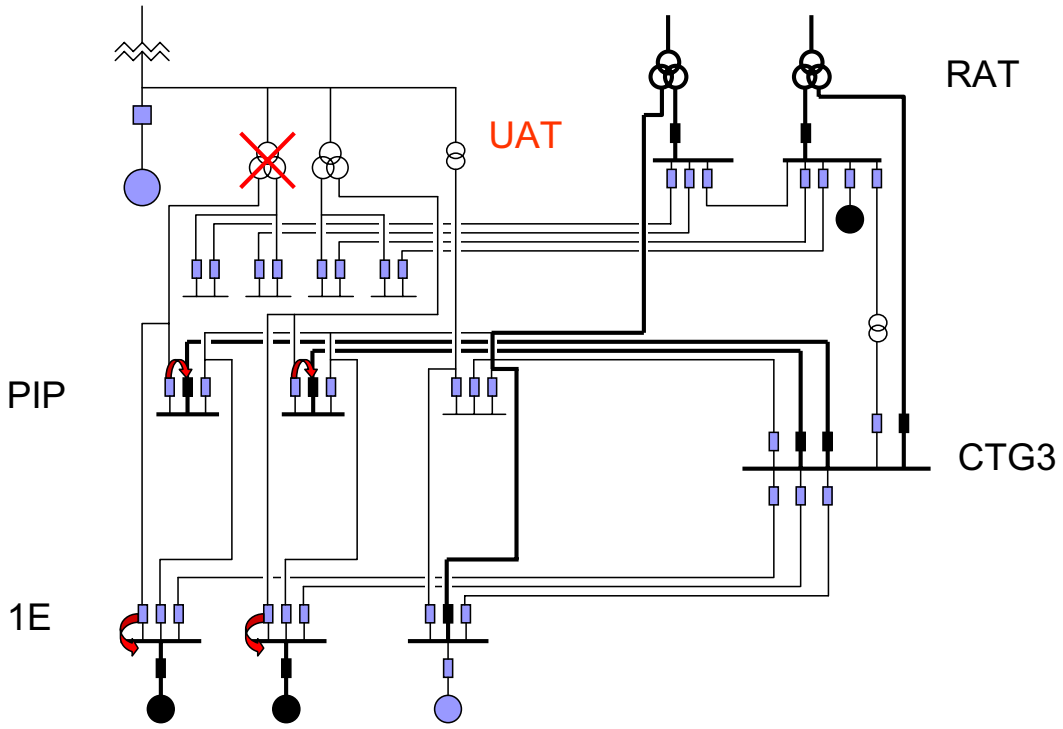

DRAFT

DRAFT

Action Item #31

RAT 4.16 kV winding capability to feed PIP and safety buses.

Response: Two PIP buses and one safety bus (1E) can be supplied from the 4.16 kV winding for RAT B directly connected to bus CTG3, as well as from the RAT A or B 13.8 kV winding via CTG1 to CTG3.

DRAFT

DRAFT

Action Item #20

Number of times RCIC is expected to cycle on and off during an 8 hour SBO event.

Response: Analysis performed shows that RCIC system is expected to cycle on and off (automatically, between Level 2 and Level 8) approximately four times during an 8 hour SBO event.

Reactor water level under SBO (8 hours):

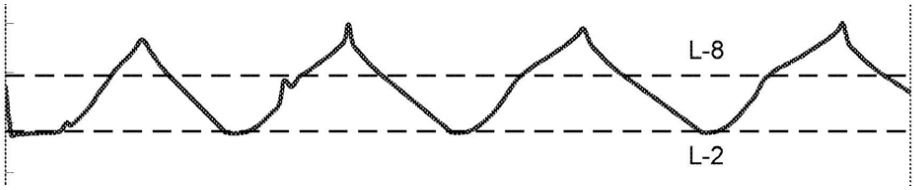

RCIC pump is a Turbine Water Lubricated (TWL) Pump (STD DEP T1 2.4-3).

DRAFT

DRAFT

Action Item #20 (cont'd)

The TWL governor directly senses pump flow and adjusts the throttle valve through a direct linkage.

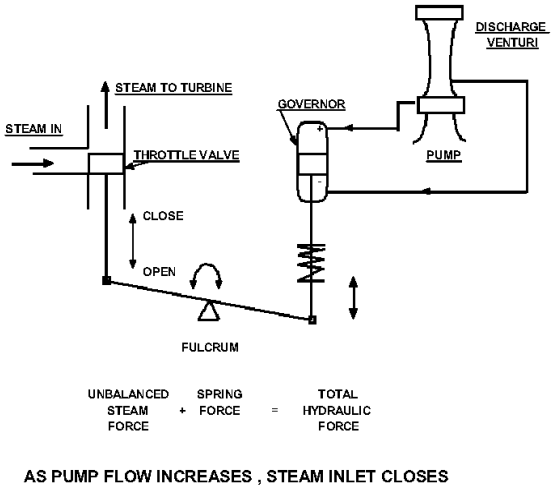

TWL pump achieves a rapid (3-10 seconds), controlled startup with no over-speed.

Typical start transient :

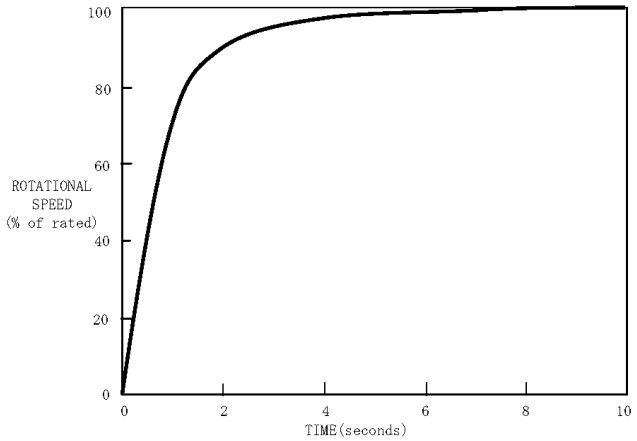

DRAFT

DRAFT

Action Item #30

Address when D-RAP list will be effectively populated.

Response: From RAI 17.4-9 Response, Revision 2, dated 5/19/2010:

The PRA input to D-RAP is included in FSAR Tables 19K-1, 19K-2 and 19K-4.

Appropriate SSCs will be evaluated by the D-RAP Expert Panel using the process described in FSAR Section 17.4S.1.4 as detailed design progresses. Current schedule is to complete a majority of the system reviews by the end of 2010 and to complete all of the system reviews, provide a list of the set of D-RAP SSCs, and have the program elements in place to control future activities, by 3rd quarter of 2011. The FSAR will be updated (10CFR50.71(e)) to provide the Expert Panel Failure Modes and RAP activities recommendations for this set of risk-significant equipment. (Refer to COM 17.4-1.)

DRAFT

DRAFT

ACRS Action Items

Questions and Comments

DRAFT