ArevaEPRDCPEm Resource

From: BRYAN Martin (EXTERNAL AREVA) [Martin.Bryan.ext@areva.com]
Sent: Thursday, June 24, 2010 6:38 PM
To: Tesfaye, Getachew
Cc: KOWALSKI David (AREVA); BALLARD Robert (AREVA); ROMINE Judy (AREVA); COLEMAN Sue (AREVA); PATTON Jeff (AREVA); SANDERS Harris (AREVA); GARDNER George Darrell (AREVA)
Subject: DRAFT Response to U.S. EPR Design Certification Application RAI No. 277, FSAR Ch. 9, Supplement 8
Attachments: RAI 277 Supplement 8 Response US EPR DC - DRAFT.pdf

Getachew,

Attached is a draft response for RAI 277 Supplement 8. Earlier today, AREVA submitted Supplement 7 that provided a date for the final response as July 28, 2010. Let us know if you have any further questions or if we can submit as final.

Sincerely,

Martin (Marty) C. Bryan
U.S. EPR Design Certification Licensing Manager
AREVA NP Inc.
Tel: (434) 832-3016
702 561-3528 cell
Martin.Bryan.ext@areva.com

From: BRYAN Martin (EXT)
Sent: Thursday, June 24, 2010 4:31 PM
To: 'Tesfaye, Getachew'
Cc: DELANO Karen V (AREVA NP INC); ROMINE Judy (AREVA NP INC); BENNETT Kathy A (OFR) (AREVA NP INC); KOWALSKI David J (AREVA NP INC)
Subject: Response to U.S. EPR Design Certification Application RAI No. 277, FSAR Ch. 9, Supplement 7

Getachew,

AREVA NP Inc. provided responses to 5 of the 12 questions of RAI No. 277 on October 16, 2009. Supplement 1 response to RAI No. 277 was sent on December 9, 2009 to provide a revised schedule for the remaining questions. Supplement 2 response to RAI No. 277 was sent on February 4, 2010 to address 1 of the remaining 7 questions. Supplement 3 response to RAI No. 277 was sent on March 11, 2010 to address 1 of the remaining 6 questions. Supplement 4, Supplement 5 and Supplement 6 responses to RAI No. 277 were sent on April 14, 2010, May 6, 2010 and May 27, 2010, respectively, to provide a revised schedule.

To allow time for interaction between AREVA and the NRC staff, a revised schedule is provided in this e-mail.

The schedule for technically correct and complete responses to the questions has been revised and is provided below:

Question #	Response Date
RAI 277 — 09.04.01-1	July 28, 2010

RAI 277 — 09.04.02-1	July 28, 2010
RAI 277 — 09.04.03-1	July 28, 2010
RAI 277 — 09.04.03-3	July 28, 2010
RAI 277 — 09.04.05-2	July 28, 2010

Sincerely,

Martin (Marty) C. Bryan
U.S. EPR Design Certification Licensing Manager
AREVA NP Inc.
Tel: (434) 832-3016
702 561-3528 cell
Martin.Bryan.ext@areva.com

From: BRYAN Martin (EXT)
Sent: Thursday, May 27, 2010 7:05 AM
To: 'Tesfaye, Getachew'
Cc: DELANO Karen V (AREVA NP INC); ROMINE Judy (AREVA NP INC); BENNETT Kathy A (OFR) (AREVA NP INC); KOWALSKI David J (AREVA NP INC)
Subject: Response to U.S. EPR Design Certification Application RAI No. 277, FSAR Ch. 9, Supplement , Supplement 6

Getachew,

AREVA NP Inc. provided responses to 5 of the 12 questions of RAI No. 277 on October 16, 2009. Supplement 1 response to RAI No. 277 was sent on December 9, 2009 to provide a revised schedule for the remaining questions. Supplement 2 response to RAI No. 277 was sent on February 4, 2010 to address 1 of the remaining 7 questions. Supplement 3 response to RAI No. 277 was sent on March 11, 2010 to address 1 of the remaining 6 questions. Supplement 4 and Supplement 5 responses to RAI No. 277 were sent on April 14, 2010 and May 6, 2010 to provide a revised schedule. Since additional time is needed for AREVA to discuss the responses to the questions with the NRC, an updated schedule is provided in this e-mail.

The schedule for technically correct and complete responses to the questions has been revised as provided below:

Question #	Response Date
RAI 277 — 09.04.01-1	June 24, 2010
RAI 277 — 09.04.02-1	June 24, 2010
RAI 277 — 09.04.03-1	June 24, 2010
RAI 277 — 09.04.03-3	June 24, 2010
RAI 277 — 09.04.05-2	June 24, 2010

Sincerely,

Martin (Marty) C. Bryan
U.S. EPR Design Certification Licensing Manager
AREVA NP Inc.
Tel: (434) 832-3016
702 561-3528 cell
Martin.Bryan.ext@areva.com

From: BRYAN Martin (EXT)
Sent: Thursday, May 06, 2010 3:59 PM
To: 'Tesfaye, Getachew'
Cc: DELANO Karen V (AREVA NP INC); ROMINE Judy (AREVA NP INC); BENNETT Kathy A (OFR) (AREVA NP INC); KOWALSKI David J (AREVA NP INC)
Subject: Response to U.S. EPR Design Certification Application RAI No. 277, FSAR Ch. 9, Supplement , Supplement 5

Getachew,

AREVA NP Inc. provided responses to 5 of the 12 questions of RAI No. 277 on October 16, 2009. Supplement 1 response to RAI No. 277 was sent on December 9, 2009 to provide a revised schedule for the remaining questions. Supplement 2 response to RAI No. 277 was sent on February 4, 2010 to address 1 of the remaining 7 questions. Supplement 3 response to RAI No. 277 was sent on March 11, 2010 to address 1 of the remaining 6 questions. Supplement 4 response to RAI No. 277 was sent on April 14, 2010 to provide a revised schedule.

To allow time for AREVA to discuss the responses to the remaining questions with the NRC, a revised schedule is provided in this e-mail that has been agreed to by the NRC.

The schedule for technically correct and complete responses to the remaining questions has been revised as provided below:

Question #	Response Date
RAI 277 — 09.04.01-1	May 27, 2010
RAI 277 — 09.04.02-1	May 27, 2010
RAI 277 — 09.04.03-1	May 27, 2010
RAI 277 — 09.04.03-3	May 27, 2010
RAI 277 — 09.04.05-2	May 27, 2010

Sincerely,

Martin (Marty) C. Bryan
U.S. EPR Design Certification Licensing Manager
AREVA NP Inc.
Tel: (434) 832-3016
702 561-3528 cell
Martin.Bryan.ext@areva.com

From: BRYAN Martin (EXT)
Sent: Wednesday, April 14, 2010 3:51 PM
To: 'Tesfaye, Getachew'
Cc: DELANO Karen V (AREVA NP INC); ROMINE Judy (AREVA NP INC); BENNETT Kathy A (OFR) (AREVA NP INC); KOWALSKI David J (AREVA NP INC)
Subject: Response to U.S. EPR Design Certification Application RAI No. 277, FSAR Ch. 9, Supplement , Supplement 4

Getachew,

AREVA NP Inc. provided responses to 5 of the 12 questions of RAI No. 277 on October 16, 2009. Supplement 1 response to RAI No. 277 was sent on December 9, 2009 to provide a revised schedule for the remaining questions. Supplement 2 response to RAI No. 277 was sent on February 4, 2010 to address 1 of the remaining 7 questions. Supplement 3 response to RAI No. 277 was sent on March 11, 2010 to address 1 of the remaining 6 questions.

To allow time for AREVA to discuss the responses to the remaining questions with the NRC, a revised schedule is provided in this e-mail.

The schedule for technically correct and complete responses to the remaining questions has been revised as provided below:

Question #	Response Date
RAI 277 — 09.04.01-1	May 6, 2010
RAI 277 — 09.04.02-1	May 6, 2010
RAI 277 — 09.04.03-1	May 6, 2010
RAI 277 — 09.04.03-3	May 6, 2010
RAI 277 — 09.04.05-2	May 6, 2010

Sincerely,

Martin (Marty) C. Bryan
Licensing Advisory Engineer
AREVA NP Inc.
Tel: (434) 832-3016
Martin.Bryan.ext@areva.com

From: BRYAN Martin (EXT)
Sent: Thursday, March 11, 2010 4:11 PM
To: 'Tesfaye, Getachew'
Cc: DELANO Karen V (AREVA NP INC); BENNETT Kathy A (OFR) (AREVA NP INC); ROMINE Judy (AREVA NP INC); KOWALSKI David J (AREVA NP INC)
Subject: Response to U.S. EPR Design Certification Application RAI No. 277, FSAR Ch. 9, Supplement 3

Getachew,

AREVA NP Inc. provided responses to 5 of the 12 questions of RAI No. 277 on October 16, 2009. Supplement 1 response to RAI No. 277 was sent on December 9, 2009 to provide a revised schedule for the remaining questions. Supplement 2 response to RAI No. 277 was sent on February 4, 2010 to address 1 of the remaining 7 questions.

The attached file, "RAI 277 Supplement 3 Response US EPR DC.pdf" provides a technically correct and complete response to 1 of the remaining 6 questions.

Appended to this file are affected pages of the U.S. EPR Final Safety Analysis Report in redline-strikeout format which supports the response to RAI 277 Question 09.02.05-21.

The following table indicates the respective pages in the response document, "RAI 277 Supplement 3 Response US EPR DC.pdf," that contain AREVA NP's response to the subject question.

Question #	Start Page	End Page
RAI 277 — 09.02.05-21	2	3

The schedule for a technically correct and complete response to the remaining 5 questions is unchanged and provided below:

Question #	Response Date
RAI 277 — 09.04.01-1	April 14, 2010
RAI 277 — 09.04.02-1	April 14, 2010
RAI 277 — 09.04.03-1	April 14, 2010
RAI 277 — 09.04.03-3	April 14, 2010
RAI 277 — 09.04.05-2	April 14, 2010

Sincerely,

Martin (Marty) C. Bryan
Licensing Advisory Engineer
AREVA NP Inc.
Tel: (434) 832-3016
Martin.Bryan.ext@areva.com

From: DUNCAN Leslie E (AREVA NP INC)
Sent: Thursday, February 04, 2010 3:14 PM
To: 'Tesfaye, Getachew'
Cc: DELANO Karen V (AREVA NP INC); BENNETT Kathy A (OFR) (AREVA NP INC); KOWALSKI David J (AREVA NP INC)
Subject: Response to U.S. EPR Design Certification Application RAI No. 277, FSAR Ch. 9, Supplement 2

Getachew,

AREVA NP Inc. provided responses to 5 of the 12 questions of RAI No. 277 on October 16, 2009. AREVA NP submitted Supplement 1 to the response on December 9, 2009 to provide a revised schedule. The attached file, "RAI 277 Supplement 2 Response US EPR DC.pdf" provides a technically correct and complete response to one of the remaining seven questions. The schedule for the remaining six questions has been revised.

Appended to this file are affected pages of the U.S. EPR Final Safety Analysis Report in redline-strikeout format which supports the response to RAI 277 Question 09.04.03-2.

The following table indicates the respective pages in the response document, "RAI 277 Supplement 2 Response US EPR DC.pdf," that contain AREVA NP's response to the subject question.

Question #	Start Page	End Page
RAI 277 — 09.04.03-2	2	2

The schedule for technically correct and complete responses to the remaining questions has been changed and is provided below:

Question #	Response Date
RAI 277 — 09.02.05-21	March 12, 2010
RAI 277 — 09.04.01-1	April 14, 2010
RAI 277 — 09.04.02-1	April 14, 2010
RAI 277 — 09.04.03-1	April 14, 2010
RAI 277 — 09.04.03-3	April 14, 2010
RAI 277 — 09.04.05-2	April 14, 2010

Sincerely,

Les Duncan

Licensing Engineer
AREVA NP Inc.
An AREVA and Siemens Company
Tel: (434) 832-2849
Leslie.Duncan@areva.com

From: Pederson Ronda M (AREVA NP INC)
Sent: Wednesday, December 09, 2009 4:03 PM
To: 'Tesfaye, Getachew'
Cc: BENNETT Kathy A (OFR) (AREVA NP INC); DELANO Karen V (AREVA NP INC); KOWALSKI David J (AREVA NP INC)
Subject: Response to U.S. EPR Design Certification Application RAI No. 277, FSAR Ch. 9, Supplement 1

Getachew,

AREVA NP Inc. provided responses to 5 of the 12 questions of RAI No. 277 on October 16, 2009. AREVA NP also provided a schedule for technically correct and complete responses to the remaining 7 questions.

Since responses to the remaining questions remain in process, a revised schedule is provided in this email.

The schedule for technically correct and complete responses to the remaining questions has been changed as provided below:

Question #	Response Date
RAI 277 — 09.02.05-21	February 4, 2010
RAI 277 — 09.04.01-1	February 4, 2010
RAI 277 — 09.04.02-1	February 4, 2010
RAI 277 — 09.04.03-1	February 4, 2010
RAI 277 — 09.04.03-2	February 4, 2010
RAI 277 — 09.04.03-3	February 4, 2010
RAI 277 — 09.04.05-2	February 4, 2010

Sincerely,

Ronda Pederson
ronda.pederson@areva.com
Licensing Manager, U.S. EPR Design Certification
AREVA NP Inc.
An AREVA and Siemens company
3315 Old Forest Road
Lynchburg, VA 24506-0935
Phone: 434-832-3694
Cell: 434-841-8788

From: Pederson Ronda M (AREVA NP INC)
Sent: Friday, October 16, 2009 5:33 PM
To: 'Tesfaye, Getachew'
Cc: BENNETT Kathy A (OFR) (AREVA NP INC); DELANO Karen V (AREVA NP INC); KOWALSKI David J (AREVA NP INC)
Subject: Response to U.S. EPR Design Certification Application RAI No. 277, FSAR Ch. 9

Getachew,

Attached please find AREVA NP Inc.'s response to the subject request for additional information (RAI). The attached file, "RAI 277 Response US EPR DC.pdf" provides technically correct and complete responses to 5 of the 12 questions.

Appended to this file are affected pages of the U.S. EPR Final Safety Analysis Report in redline-strikeout format which supports the response to RAI 277 Questions 09.04.02-2, 09.04.04-1, and 09.05.01-71.

The following table indicates the respective page(s) in the response document, "RAI 277 Response US EPR DC.pdf," that contain AREVA NP's response to the subject questions.

Question #	Start Page	End Page
RAI 277 — 09.02.05-21	2	2
RAI 277 — 09.04.01-1	3	3
RAI 277 — 09.04.02-1	4	4
RAI 277 — 09.04.02-2	5	5
RAI 277 — 09.04.03-1	6	6
RAI 277 — 09.04.03-2	7	7
RAI 277 — 09.04.03-3	8	8
RAI 277 — 09.04.04-1	9	10
RAI 277 — 09.04.04-2	11	11
RAI 277 — 09.04.05-2	12	12
RAI 277 — 09.05.01-71	13	13
RAI 277 — 09.05.06-12	14	14

A complete answer is not provided for 7 of the 12 questions. The schedule for a technically correct and complete response to these questions is provided below.

Question #	Response Date
RAI 277 — 09.02.05-21	December 10, 2009
RAI 277 — 09.04.01-1	December 10, 2009
RAI 277 — 09.04.02-1	December 10, 2009
RAI 277 — 09.04.03-1	December 10, 2009
RAI 277 — 09.04.03-2	December 10, 2009
RAI 277 — 09.04.03-3	December 10, 2009
RAI 277 — 09.04.05-2	December 10, 2009

Sincerely,

Ronda Pederson
ronda.pederson@areva.com
Licensing Manager, U.S. EPR Design Certification
AREVA NP Inc.
An AREVA and Siemens company
3315 Old Forest Road
Lynchburg, VA 24506-0935
Phone: 434-832-3694
Cell: 434-841-8788

From: Tesfaye, Getachew [mailto:Getachew.Tesfaye@nrc.gov]
Sent: Wednesday, September 16, 2009 12:52 PM
To: ZZ-DL-A-USEPR-DL
Cc: Wheeler, Larry; Segala, John; ODriscoll, James; Jackson, Christopher; Snodderly, Michael; McCann, Edward; Radlinski, Robert; Wolfgang, Robert; Hearn, Peter; Colaccino, Joseph; ArevaEPRDCPEm Resource
Subject: U.S. EPR Design Certification Application RAI No. 277(3538,3371,3372,3376,3374,3375,3399,2995)), FSAR Ch. 9

Attached please find the subject requests for additional information (RAI). A draft of the RAI was provided to you on August 17, 2009, and discussed with your staff on August 31, 2009. Draft RAI Questions 09.05.01-70 was deleted as a result of that discussion. The schedule we have established for review of your application assumes technically correct and complete responses within 30 days of receipt of RAIs. For any RAIs that cannot be answered within 30 days, it is expected that a date for receipt of this information will be provided to the staff within the 30 day period so that the staff can assess how this information will impact the published schedule.

Thanks,
Getachew Tesfaye
Sr. Project Manager
NRO/DNRL/NARP
(301) 415-3361

Hearing Identifier: AREVA_EPR_DC_RAIs
Email Number: 1609

Mail Envelope Properties (BC417D9255991046A37DD56CF597DB7106A75E8E)

Subject: DRAFT Response to U.S. EPR Design Certification Application RAI No. 277, FSAR Ch. 9, Supplement 8
Sent Date: 6/24/2010 6:38:07 PM
Received Date: 6/24/2010 6:38:24 PM
From: BRYAN Martin (EXTERNAL AREVA)

Created By: Martin.Bryan.ext@areva.com

Recipients:
"KOWALSKI David (AREVA)" <David.Kowalski@areva.com>
Tracking Status: None
"BALLARD Robert (AREVA)" <Robert.Ballard@areva.com>
Tracking Status: None
"ROMINE Judy (AREVA)" <Judy.Romine@areva.com>
Tracking Status: None
"COLEMAN Sue (AREVA)" <Sue.Coleman@areva.com>
Tracking Status: None
"PATTON Jeff (AREVA)" <Jeff.Patton@areva.com>
Tracking Status: None
"SANDERS Harris (AREVA)" <Harris.Sanders@areva.com>
Tracking Status: None
"GARDNER George Darrell (AREVA)" <Darrell.Gardner@areva.com>
Tracking Status: None
"Tesfaye, Getachew" <Getachew.Tesfaye@nrc.gov>
Tracking Status: None

Post Office: AUSLYNCMX02.adom.ad.corp

Files	**Size**	**Date & Time**
MESSAGE	15757	6/24/2010 6:38:24 PM
RAI 277 Supplement 8 Response US EPR DC - DRAFT.pdf	2078407	

Options
Priority: Standard
Return Notification: No
Reply Requested: No
Sensitivity: Normal
Expiration Date:
Recipients Received:

Response to

Request for Additional Information No. 277, Supplement 8

9/16/2009

U.S. EPR Standard Design Certification
AREVA NP Inc.
Docket No. 52-020
SRP Section: 09.02.05 - Ultimate Heat Sink
SRP Section: 09.04.01 - Control Room Area Ventilation System
SRP Section: 09.04.02 - Spent Fuel Pool Area Ventilation System
SRP Section: 09.04.03 - Auxiliary and Radwaste Area Ventilation System
SRP Section: 09.04.04 - Turbine Area Ventilation System
SRP Section: 09.04.05 - Engineered Safety Feature Ventilation System
SRP Section: 09.05.01 - Fire Protection Program
SRP Section: 09.05.06 - Emergency Diesel Engine Starting System

Application Section: 9.2.9

QUESTIONS for Balance of Plant Branch 2 (ESBWR/ABWR) (SBPB)
QUESTIONS for Containment and Ventilation Branch 1 (AP1000/EPR Projects) (SPCV)
QUESTIONS for Balance of Plant Branch 1 (AP1000/EPR Projects) (SBPA)

DRAFT

Question 09.04.01-1:

Discuss method by which the capability of the safety-related ventilation systems will be verified.

The applicant has provided the performance requirements for the various safety-related ventilation systems (Described in FSAR sections 9.4.1,2,5,6,9,11) but has not provided detailed design information related to the sizing of the ventilation systems. Adequate sizing of the system is assured through the surveillance requirements (for example SR 3.7.11.1) which verifies the capability or the system to remove the design heat load.

The applicant did not verify the capability of the systems. For each safety related ventilation system, provide the following:

1. Provide a description in the FSAR that verifies the capability of the system to remove the design heat load. The applicant should describe the method for verification (by testing and/or analysis) as well as a description of the methods for determining the design heat loads including the limiting or bounding assumptions for all modes of operation including normal and outage, and during all anticipated occurrences including postulated accident events.
2. Include this demonstration as part of ITAAC. Existing ITAAC (e.g., Reference Section Number 6.1 in Tier 1 Table 2.6.1-3) acceptance criteria is not adequate to verify the system's capability to maintain ambient temperature conditions in the Control Room Envelope for all modes of operation.
3. The staff noted that the CRACS space heaters are non-safety augmented quality (NS-AQ) and Seismic Category II. The staff has also noted that the heaters associated with the control room air intake and iodine filtration system are safety related. Please describe the analysis that demonstrates the failure of the CRACS space heaters would not challenge the operability of MCR equipment, adversely affect human performance in the MCR, or would still allow the minimum MCR temperature of 68°F to be met, for all outside temperature ranges stated in FSAR Table 2.1-1. Alternatively, designate the heaters safety-related and include the design basis for the heaters in the FSAR.
4. This is SER/OI Open Item 9.4.1-1

Response to Question 09.04.01-1:

1. The following U.S. EPR FSAR Tier 1 and Tier 2 sections will be revised to provide design information for determining design heat loads for various modes of operation for sizing of the system and ITAAC testing data:
   - U.S. EPR FSAR Tier 1, Table 2.6.1-3—Main Control Room Air Conditioning System ITAAC.
   - U.S. EPR FSAR Tier 1, Section 2.6.6 and Table 2.6.6-3—Safeguard Building Controlled-Area Ventilation System ITAAC.
   - U.S. EPR FSAR Tier 1, Table 2.6.7-3—Electrical Division of Safeguard Building Ventilation System ITAAC.
   - U.S. EPR FSAR Tier 1, Section 2.6.9 and Table 2.6.9-3—Emergency Power Generating Building Ventilation System ITAAC.

DRAFT

- U.S. EPR FSAR Tier 1, Section 2.6.13 and Table 2.6.13-3—Essential Service Water Pump Building Ventilation System ITAAC.
- U.S. EPR FSAR Tier 2, Sections 9.4.1.1, 9.4.1.6, 9.4.2.1, 9.4.2.6, 9.4.5.1, 9.4.5.6, 9.4.6.1, 9.4.6.6, 9.4.9.1, 9.4.9.6, 9.4.11.1, and 9.4.11.6.

2. U.S. EPR FSAR Tier 1, Table 2.6.1-3—Main Control Room Air Conditioning System ITAAC, Item 6.1 will be revised to verify the system capability to maintain ambient temperature.
3. The main control room air conditioning system (CRACS) space heaters (supply air duct heaters) will be reclassified as safety-related and Seismic Category I.

   U.S. EPR FSAR Tier 1, Figure 2.6.1-3—CRE Air Supply and Recirculation Subsystem Functional Arrangement, U.S. EPR FSAR Tier 2, Table 3.2.2-1—Classification Summary, Table 3.10-1—List of Seismically and Dynamically Qualified Mechanical and Electrical Equipment, and Figure 9.4.1-3—Control Room Envelope Air Supply and Recirculation Subsystem will be revised to reflect this change in classification.
4. Refer to Parts 1, 2, and 3 of this response.

FSAR Impact:

U.S. EPR FSAR Tier 1, Section 2.6.6, Section 2.6.9 and Section 2.6.13, Table 2.6.1-3, Table 2.6.6-3, Table 2.6.7-3, Table 2.6.9-3, Table 2.6.13-3, and Figure 2.6.1-3 will be revised as described in the response and indicated on the enclosed markup.

U.S. EPR FSAR Tier 2, Sections 9.4.1.1, 9.4.1.6, 9.4.2.1, 9.4.2.6, 9.4.5.1, 9.4.5.6, 9.4.6.1, 9.4.6.6, 9.4.9.1, 9.4.9.6, 9.4.11.1, 9.4.11.6, Table 3.2.2-1, Table 3.10-1, and Figure 9.4.1-3 will be revised as described in the response and indicated on the enclosed markup.

DRAFT

Question 09.04.02-1:

Heating is defined as a safety related function in tier 1 (para 2.6.4.1)- Tier 2 has heating listed as both a safety and non safety function. Confirm that Tier 1 drawing on SFP system be revised to include heaters. If heaters are safety related, they should be listed in Tier 1 table 2.6.4.2 I&C sheets for displays and controls. If the heaters are not safety-related, an explanation should be provided justifying the heaters non safety related status.

Response to Question 09.04.02-1:

U.S. EPR FSAR Tier 1, Table 2.6.4-1—Fuel Building Ventilation System Equipment Mechanical Design and Table 2.6.4-2—Fuel Building Ventilation System Equipment I&C and Electrical Design will be revised to include safety-related heaters.

U.S. EPR FSAR Tier 1, Figure 2.6.4-1—Fuel Building Ventilation System Functional Arrangement will be revised to reflect safety-related heaters.

U.S. EPR FSAR Tier 2, Sections 9.4.2.1, 9.4.2.2.3, and 9.4.2.3 will be revised to clarify the safety-related and non-safety-related functions of the heaters.

Justification for assigning a safety-related or non-safety-related classification to the heaters is provided as follows:

- Safety-related heaters are provided for heating the extra borating system (EBS) pump rooms and EBS pipe chase to maintain a minimum temperature of 68˚F in the rooms and surrounding areas. This action is required to prevent boron crystallization and is a safety-related functional requirement.
- Non-safety-related heaters are provided to maintain a minimum required ambient temperature in other rooms.

U.S. EPR FSAR Tier 2, Figure 9.4.2-1—Fuel Building Ventilation System will be revised to include safety-related and non-safety-related heaters.

U.S. EPR FSAR Tier 2, Table 3.2.2-1—Classification Summary will be revised to clarify the description and identification of safety-related heating units and supplemented grade heating units, and provide a description and identification of non-safety-related space heating units that serve various spaces within the Fuel Building to provide the minimum required ambient temperature. This table will be revised to include the manual dampers for the supply and exhaust air.

U.S. EPR FSAR Tier 2, Table 3.10-1—List of Seismically and Dynamically Qualified Mechanical and Electrical Equipment and U.S. EPR FSAR Tier 2, Table 3.11-1—List of Environmentally Qualified Electrical/I&C Equipment will be revised to reflect this change.

FSAR Impact:

U.S. EPR FSAR Tier 1, Table 2.6.4-1, Table 2.6.4-2, and Figure 2.6.4-1 will be revised as described in the response and indicated on the enclosed markup.

DRAFT

U.S. EPR FSAR Tier 2, Table 3.2.2-1, Table 3.10-1, Table 3.11-1, Sections 9.4.2.1, 9.4.2.2.3, 9.4.2.3, and Figure 9.4.2-1 will be revised as described in the response and indicated on the enclosed markup.

DRAFT

Question 09.04.03-1:

To ensure reliable in-place testing, Regulatory Guide 1.140, Position C3.2, states that the volumetric air-flow rate of a single cleanup unit should be limited to approximately 30,000 cfm. RAI No. 135, Question 09.04.05-1 (#8) requested the applicant to provide data indicating that the maximum flow rate for a single cleanup unit would not exceed 30,000 cfm or multiple units should be selected. While the low flow purge subsystem flowrate of 3,000 cfm was provided, the response did not specify that the maximum flowrates for single cleanup unit would not exceed 30,000 cfm or require multiple units for the internal filtration subsystem, the containment building cooling subsystem and the service and equipment compartment cooling subsystem. The open item can be resolved by providing a statement indicating that the volumetric air-flow rate of a single cleanup unit will not exceed 30,000 cfm or multiple units will be selected for the internal filtration subsystem, the containment building cooling subsystem and the service and equipment compartment cooling subsystem. If the applicant elects not to follow the recommendation of Regulatory Guide 1.140, Position C3.2; then an alternative approach demonstrating compliance with GDC 60 should be provided.

A normal atmosphere cleanup system housings and ductwork should be designed to exhibit, on test a maximum total leakage rate as defined in Article SA-4500 of ASME AG-1-1997 Ref. 3, Regulatory Guide 1.140, Position C3.6. The applicant did indicate in FSAR Tier 2, Section 9.4.7.2.1 that the containment purge subsystem is designed in accordance with ASME AG-1-2003. However, the applicant did not provide information indicating that the internal filtration subsystem, the containment building cooling subsystem and the service and equipment compartment cooling subsystem are designed to ASME AG-1-2003. The applicant should state that the above systems are designed in accordance with ASME AG-1-2003. If the applicant elects not to follow the recommendation of Regulatory Guide 1.140, Position C3.6; then provide an alternative approach demonstrating compliance with GDC 60.

Response to Question 09.04.03-1:

The internal filtration subsystem has a nominal flow rate of 4,120 cfm. This flow rate complies with RG 1.140, Position C3.2, which specifies that the volumetric air flow rate of a single cleanup unit be limited to approximately 30,000 cfm.

The 30,000 cfm limit supports the performance of reliable in-place testing of the cleanup units. The containment building cooling subsystem and the service compartments cooling subsystem are air cooling systems and do not include cleanup units. These subsystems are not required to comply with Position C3.6 of RG 1.140.

The containment building cooling subsystem and service compartments cooling subsystem are designed to the applicable sections of ASME AG-1 that address ventilation air conditioning systems. The corresponding subsections in U.S. EPR FSAR Tier 2, Section 9.4.7.2.1 will be revised to reflect this change.

U.S. EPR FSAR Tier 2, Table 1.9-2—U.S. EPR Conformance with Regulatory Guides will be revised to include U.S. EPR FSAR Tier 2, Section 9.4.7.2.1.

DRAFT

FSAR Impact:

U.S. EPR FSAR Tier 2, Table 1.9-2 and Section 9.4.7.2.1 will be revised as described in the response and indicated on the enclosed markup.

DRAFT

Question 09.04.03-3:

Clarify the role of the CBVS in meeting GDC 41 and GDC 42

The FSAR in section 9.4.7.1 states "The containment purge subsystems remove radioactive materials via iodine filtration trains prior to release to the atmosphere (GDC 41)." However, the containment building ventilation system does not meet the requirements for General Design Criterion 41, because it is not designated as a safety system. Although these systems are designed to Seismic Category I requirements, it is not designated as a safety system. The FSAR in section 9.3.7.3 states, "The CBVS is not an engineered safety feature and has no safety-related function except the containment isolation and low-flow purge." This is inconsistent with crediting it as the system designed to meet GDC 41 which requires a safety system capable of performing the safety function assuming a single failure and loss of offsite power. The applicant needs to clarify the role of the CBVS in meeting GDC 41. The applicant needs to state how GDC 41 is met (this is typically described in FSAR section 6.2.5 and 6.5). If the CBVS system is credited the applicant needs to describe the meeting of the requirements of GDC 41.

The containment building ventilation system has not been shown to meet the requirements of GDC 41. As a result, the staff is unable to determine if the requirements for General Design Criterion 42 are met until it can determine if the requirements of GDC 41 are met.

Response to Question 09.04.03-3:

The containment building ventilation system is composed of separate subsystems and is described in U.S. EPR FSAR Tier 2, Section 9.4.7.2.1. The containment low-flow purge exhaust subsystem is designated as a safety-related, Seismic Category I, engineered safety features ventilation system and meets the requirements of GDC 41. U.S. EPR FSAR Tier 2, Section 6.5 describes the compliance of the low-flow purge exhaust subsystem with GDC 41.

The internal filtration subsystem is considered a normal atmosphere cleanup system and is designed to RG 1.140 and ASME AG-1.

U.S. EPR FSAR Tier 2, Section 9.4.7.1 will be revised to provide clarification.

FSAR Impact:

U.S. EPR FSAR Tier 2, Section 9.4.7.1 will be revised as described in the response and indicated on the enclosed markup.

DRAFT

Question 09.04.05-2:

GDC 2 requires the Engineered Safety Function Ventilation System being capable of withstanding the effects of earthquakes. SRP 9.4.5 includes GDC 2 as specific acceptance criteria. FSAR Tier 2 Section 9.4.5.1 indicates that the Safeguard Building Controlled Area Ventilation system is designed to Seismic Category I except for the following:

a. Supply air ductwork which is classified as supplemented grade safety (NS-AQ) and designed to Seismic Category II requirements.

b. Electric air heating convectors which are non-safety-related and Non-Seismic.

FSAR Table 3.2.2-1 indicates that the fire dampers are supplemented grade safety (NS-AQ) and designed to Seismic Category II requirements.

Since the SBVS fire dampers are classified as Seismic Category II (FSAR Tier 2 Table 3.2.2-1), they are not expected to function after an SSE (RG 1.29 Position C.2). The fire dampers after an SSE can be assumed to fail closed, thereby isolating the SB rooms from the normal and accident exhaust trains in each of the four SBVS divisions. Additionally, Seismic Category II ductwork can be assumed to deform (restricting airflow) but not impact or cause harm to a Seismic Category I SSC. Finally any nonsafety-related active component can be assumed to fail when challenged during any accident.

The applicant is requested to either show that potential failure of these components will not reduce the safety function of the SBVS or classify the components as Seismic Category I.

Response to Question 09.04.05-2:

a) The safeguard building controlled area ventilation system (SBVS) supply ventilation ductwork has been reclassified as safety-related, Quality Group C and Seismic Category I.

   U.S. EPR FSAR Tier 1, Figure 2.6.6-1—Safeguard Building Controlled-Area Ventilation System Air Supply Functional Arrangement will be revised to reflect this change in classification.

   U.S. EPR FSAR Tier 2, Section 9.4.5.1 will be revised to reflect this change. Refer to the Response to Question 09.04.01-1, Part 1.

   U.S. EPR FSAR Tier 2, Figure 9.4.5-1—Safeguard Building Controlled-Area Ventilation System Air Supply Subsystem and Figure 9.4.5-2—Safeguard Building Controlled-Area Ventilation System Exhaust Air Subsystem will be revised to reflect this change in classification. Refer to the Response to Question 09.04.01-1, Part 1.

b) Electric air heating convectors such as wall- or ceiling-mounted electric unit heaters for the SBVS provide personnel comfort heating only for stairwells and access areas during normal plant operation. These heaters are not required to maintain the minimum ambient design temperature (50°F) for the Safeguard Building controlled area.

   The SBVS fire dampers will be reclassified as safety-related, Quality Group C and Seismic Category I.

DRAFT

U.S. EPR FSAR Tier 2, Table 3.2.2-1—Classification Summary, Table 3.10-1—List of Seismically and Dynamically Qualified Mechanical will be revised to reflect this change.

U.S. EPR FSAR Tier 2, Section 9.4.5.1 will be revised to reflect this change. Refer to the Response to Question 09.04.01-1, Part 1.

U.S. EPR FSAR Tier 2, Figure 9.4.5-1—Safeguard Buildings Air Supply Subsystem and Figure 9.4.5-2—Safeguard Buildings Exhaust Air Subsystem will be revised to reflect this change.

FSAR Impact:

U.S. EPR FSAR Tier 1, Figure 2.6.6-1 will be revised as described in the response and indicated on the enclosed markup.

U.S. EPR FSAR Tier 2, Table 3.2.2-1, Table 3.10-1, Section 9.4.5.1, Figure 9.4.5-1, and Figure 9.4.5-2 will be revised as described in the response and indicated on the enclosed markup.

DRAFT

U.S. EPR Final Safety Analysis Report Markups

DRAFT

Table 2.6.1-3—Main Control Room Air Conditioning System ITAAC (~~4~~ 5 Sheets)

Commitment Wording		Inspections, Tests, Analyses	Acceptance Criteria
5.2	Motor operated dampers listed in Table 2.6.1-2 fail to the position as shown in Table 2.6.1-2 on loss of power.	Testing will be performed for the motor operated dampers listed in Table 2.6.1-2 to verify the position of dampers on loss of power.	Following loss of power, the motor operated dampers listed in Table 2.6.1-2 fail to the position as shown in Table 2.6.1-2.
6.1	The CRACS maintains ~~ambient conditions and~~ a positive pressure in the CRE areas relative to the outside environment and adjacent areas.	Tests will be performed on the capability of the system to maintain a positive pressure in the CRE areas relative to the outside environment and adjacent areas.	The test confirms that a positive pressure of greater than or equal to 1/8 inches water gauge is maintained inside the CRE area (while operating in a design basis accident alignment) relative to the outside environment and adjacent areas. 09.04.01 The test confirms that a positive pressure of greater than or equal to 0.01 inches water gauge is maintained inside the CRE area (while operating in a normal alignment) relative to the outside and adjacent areas.
6.2	Upon receipt of a containment isolation signal (CIS), or high radiation alarm signal in the air intake duct, the iodine filtration train will start automatically, outside air supply to the CRE area is diverted through the iodine filtration train, and a minimum recirculation flowrate is established from the CRE area to the iodine filtration train.	a. A test will be performed to verify that upon receipt of a CIS, the iodine filtration train will start automatically; and the outside air supply is diverted through the iodine filtration train. Test is performed separately for each iodine filtration train. b. A test will be performed to verify that upon receipt of high radiation alarm signal in the air intake duct, the iodine filtration train will start automatically; and the outside air supply is diverted through the iodine filtration train. Test is performed separately for each iodine filtration train.	a. A separate test for each iodine filtration train confirms that upon receipt of a CIS, the iodine filtration train will start automatically within 60 seconds; and the outside air supply is diverted through the iodine filtration train. b. A separate test for each iodine filtration train confirms that upon receipt of high radiation alarm signal in the air intake duct, the iodine filtration train will start automatically within 60 seconds; and the outside air supply is diverted through the iodine filtration train.

DRAFT

Table 2.6.1-3—Main Control Room Air Conditioning System ITAAC (~~4~~ 5 Sheets)

Commitment Wording		Inspections, Tests, Analyses	Acceptance Criteria
		c. A test will be performed to verify that a minimum recirculation flowrate for each iodine filtration train is achieved.	c. A separate test for each iodine filtration train confirms a CRE recirculation flowrate of greater than or equal to 3000 scfm.
6.3	Upon actuation of the plant toxic gas alarm signal, the outside air intake dampers close automatically and the CRE air is in recirculation mode without outside air.	A test will be performed to verify that upon actuation of the plant toxic gas alarm signal, the outside air intake dampers close automatically and the CRE air is in recirculation mode without outside air. Test is performed separately for each air intake train.	A separate test for each air intake train confirms that upon actuation of the plant toxic gas alarm signal, the outside air intake dampers close automatically and the CRE air is in recirculation mode without outside air.
6.4	The CRE area ventilation unfiltered air in-leakage is minimized in order to maintain the MCR habitability.	Test will be performed to measure the unfiltered air in-leakage inside the CRE area boundary.	The test confirms that the unfiltered air in-leakage inside the CRE area boundary is less than or equal to 50 scfm.
6.5	Each CRACS train has the capability to remove the design heat load.	a. An inspection of the manufacturer's documentation of the CRACS cooling coils will be performed.	a. Each CRACS cooling coil (30SAB01/02/03/04 AC001) shall have been tested and certified for a total cooling capacity of 470,000 Btu/hr.

09.04.01-1

DRAFT

Table 2.6.1-3—Main Control Room Air Conditioning System ITAAC (~~4~~ 5 Sheets)

Commitment Wording	Inspections, Tests, Analyses	Acceptance Criteria
09.04.01	b.Tests will be performed to verify that ambient temperatures are being maintained in the CRE rooms.	b. The test shall confirm that: • Main control room temperature is greater than or equal to 68° F and less than or equal to 78° F. • I&C, computer, and rest rooms temperature is greater than or equal to 65°F and less than or equal to 78° F. • CRE HVAC rooms temperature is greater than or equal to 50° F and less than or equal to 95° F. • Other areas of the CRE, temperature is greater than or equal to 68° F and less than or equal to 78° F. • Verify the CRACS fan (30SAB01/02/03/04 AN 001) design air flow is a nominal 12,050 scfm (for each of two operating units).

DRAFT

Next File

Figure 2.6.1-3—CRE Air Supply and Recircul

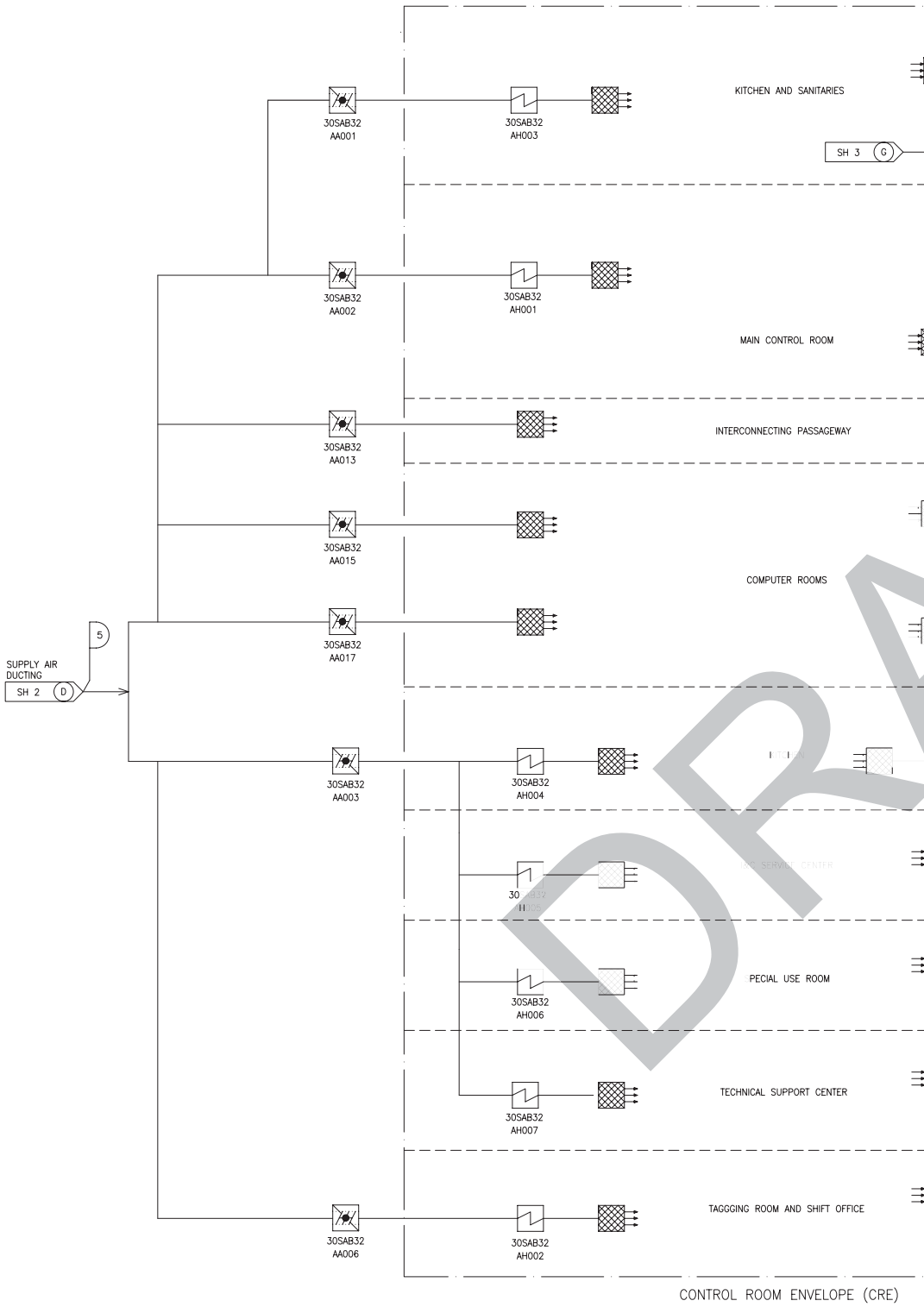

DRA

Table 2.6.4-1—Fuel Building Ventilation System Equipment Mechanical Design (3 Shee

~~Equipment~~ Description	~~Equipment~~ Tag Number [1]	~~Equipment~~ Location	ASME AG-1 Code	Function
Air Cooling Coil	30KLL64AC001	Fuel Building	Yes	N/A
Moisture Separator	30KLL64AT001	Fuel Building	Yes	N/A
Recirculation Fan	30KLL64AN001	Fuel Building	Yes	Run
Recirculation Cooling Units for the Fuel Pool Cooling System Pump Rooms				
Air Cooling Coil	30KLL61AC002	Fuel Building	Yes	N/A
Recirculation Fan	30KLL61AN002	Fuel Building	Yes	Run
Air Cooling Coil	30KLL61AC003	Fuel Building	Yes	N/A
Recirculation Fan	30KLL61AN003	Fuel Building	Yes	Run
Air Cooling Coil	30KLL64AC002	Fuel Building	Yes	N/A
Recirculation Fan	30KLL64AN002	Fuel Building	Yes	Run
Air Cooling Coil	30KLL64AC003	Fuel Building	Yes	N/A
Recirculation Fan	30KLL64AN003	Fuel Building	Yes	Run
Moisture Separator	30KLL61AT002	Fuel Building	Yes	N/A
Moisture Separator	09.04.02-1 LL61AT003	Fuel Building	Yes	N/A
Moisture Separator	30KLL64AT002	Fuel Building	Yes	N/A
Moisture Separator	30KLL64AT003	Fuel Building	Yes	N/A
Electric Heaters for the Extra Borating System Pump Rooms and Pipe Chase				
Electric Heaters	30KLL61/64AH 001/002/003/004	Fuel Building	Yes	On/Off

1) Equipment tag numbers are provided for information only and are not part of the certified design.

DRAFT

Table 2.6.4-2—Fuel Building Ventilation System Equipment I&C and Electrical Desig
(4 Sheets)

09.04.02-1

~~Equipment~~ Description	~~Equipment~~ Tag Number (1)	~~Equipment~~ Location	IEEE Class 1E (2)	Failure Position	EQ – Harsh Env.	PACS	MCR Disp
Recirculation Fan	30KLL64AN003	Fuel Building	Division 4 N Division 3 A	N/A	Yes	Yes	On-Of C
Electric Heaters for the Extra Borating System Pump Rooms and Pipe Chase							
Electric Heaters	30KLL61AH 001/002/003/004	Fuel Building	Division 1 N Division 2 A	N/A	Yes	Yes	On-Of C
Electric Heaters	30KLL64AH 001/002/003/004	Fuel Building	Division 4 N Division 3 A	N/A	Yes	Yes	On-Of C

1) Equipment tag numbers are provided for information only and are not part of the certified design.

2) N denotes division the component is normally powered from, while A denotes division the component is powered fr is implemented.

DRAFT

Figure 2.6.4-1—Fuel Building Ventila

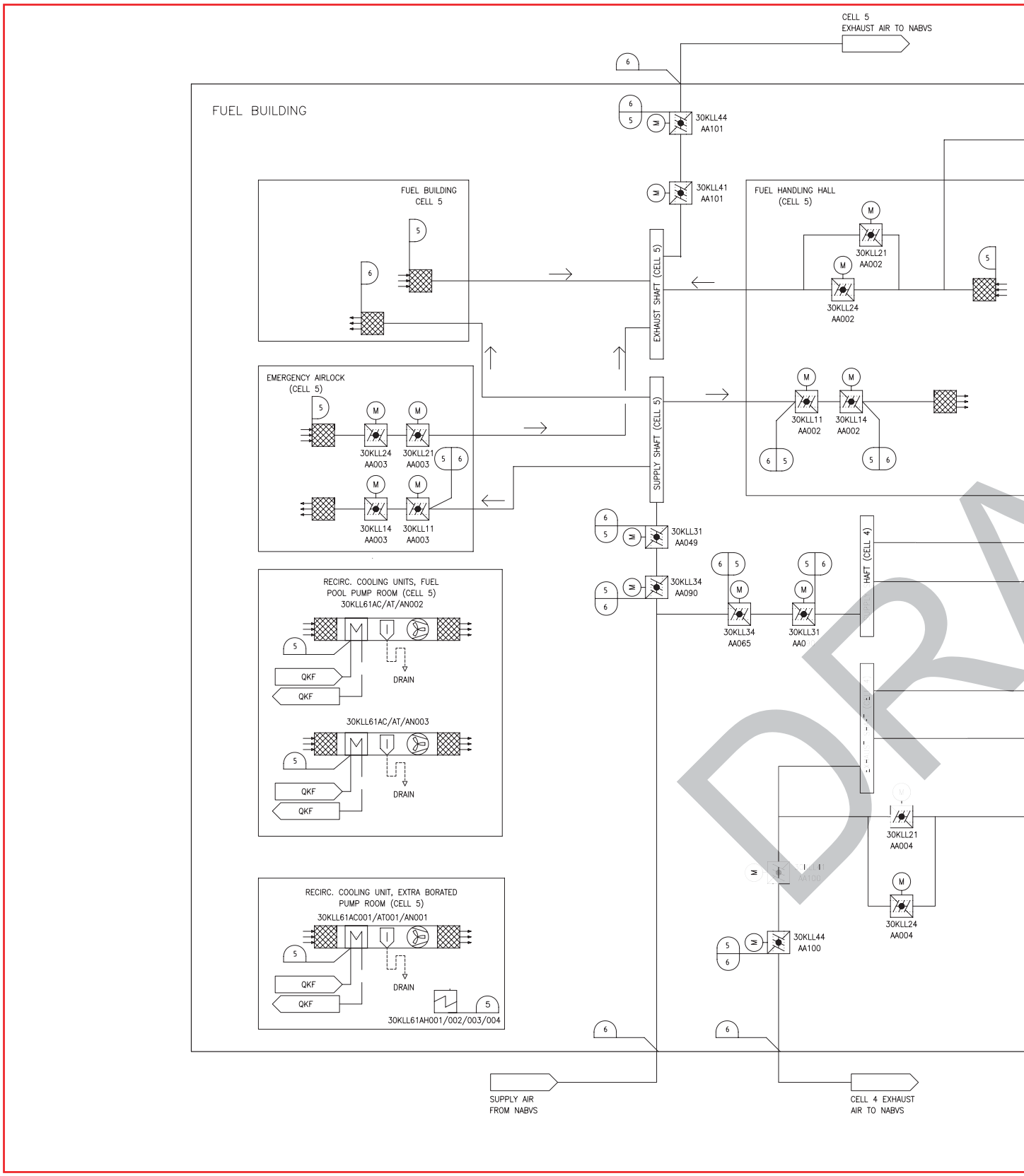

DRA

09.04.02-1

4.3 Equipment listed as being controlled by a priority and actuator control system (PACS) module in Table 2.6.6-2 responds to the state requested by a test signal.

5.0 Electrical Power Design Features

5.1 The equipment designated as Class 1E in Table 2.6.6-2 are powered from the Class 1E division as listed in Table 2.6.6-2 in a normal or alternate feed condition.

5.2 Motor operated dampers listed in Table 2.6.6-2 fail to the position as shown in Table 2.6.6-2 on loss of power.

6.0 Environmental Qualifications

6.1 Components in Table 2.6.6-2, that are designated as harsh environment, will perform the function listed in Table 2.6.6-1 in the environments that exist during and following design basis events.~~Electrical drivers for equipment listed in Table 2.6.6-2 for harsh environment can perform the safety function in Table 2.6.6-1 following exposure to the design basis environments for the time required.~~

09.04.01-1

6.2 The SBVS provides recirculation cooling and has the capability to remove design heat load from Safeguard Building hot mechanical rooms.

7.0 Equipment and System Performance

7.1 The SBVS maintains a negative pressure relative to the outside environment in the hot mechanical areas of the Safeguards Buildings during normal operation.

7.2 Upon receipt of a high radiation signal in the hot mechanical area of a Safeguard Building division during normal operation, supply and exhaust air flow is configured such that the SBVS exhaust is automatically directed to the NAVBS iodine exhaust filters.

7.3 Upon receipt of a high radiation signal ~~as a result of a fuel handling accident~~ in the FB, or ~~fuel handling accident in~~ the Reactor Building, both SBVS iodine filtration trains start automatically, the isolation dampers open to the building where ~~the accident occurred~~the high radiation signal is initiated~~,~~ (either the FB or the Reactor Building), and the accident air is directed through the SBVS iodine filtration trains.

7.4 Upon receipt of a containment isolation signal or high radiation signal in the Reactor Building, the SBVS is isolated from the SBVSE and NAVBS by automatically closing the air supply and exhaust isolation dampers, both SBVS iodine filtration trains start automatically, and the FB and SB exhaust air is directed through the iodine filtration trains to maintain a negative pressure inside the FB and SB.

8.0 Inspections, Tests, Analyses and Acceptance Criteria

Table 2.6.6-3 lists the SBVS ITAAC.

DRAFT

Table 2.6.6-3—Safeguard Building Controlled-Area Ventilation System ITAAC (6 Sheets)

Commitment Wording		Inspections, Tests, Analyses	Acceptance Criteria
		b. Components listed as harsh environment in Table 2.6.6-2 will be inspected to verify installation in accordance with the construction drawings including the associated wiring, cables and terminations. Deviations to the construction drawings will be reconciled to the EQDP.~~b. For equipment listed for harsh environment in Table 2.6.6-2 an inspection will be performed of the as-installed Class 1E equipment and the associated wiring, cables and terminations.~~	b. Inspection reports exists and conclude that the components listed in Table 2.6.6-2 as harsh environment has been installed per the construction drawings and any deviations have been reconciled to the EQDP.~~b. Inspection concludes that the as-installed Class 1E equipment and associated wiring, cables and terminations as listed in Table 2.6.6-2 for harsh environment conform to the design.~~
6.2	The SBVS provides recirculation cooling and has the capability to remove design heat load from Safeguard Building hot mechanical rooms.	Tests will be performed to verify capability of the system to maintain the ambient conditions within each division Safeguard Building for the hot mechanical rooms	a. Each SBVS cooling coil is to have been tested and certified for a total cooling capacity of : • KLC 51/54 AN001 64,800 Btu/hr. • KLC 51/54 AN002 32,400 Btu/hr. • KLC 51/54 AN003 21,600 Btu/hr. • KLC 52/53 AN001 54,000 Btu/hr. • KLC 52/53 AN002 32,400 Btu/hr.

09.04.01-1

DRAFT

Table 2.6.6-3—Safeguard Building Controlled-Area Ventilation System ITAAC (6 Sheets)

Commitment Wording		Inspections, Tests, Analyses	Acceptance Criteria
		09.04.01-1	b. A separate test for each Division of the Safeguard Building hot mechanical rooms to verify that: Ambient temperature shall be maintained between between 50°F and 104°F. The nominal air flow shall be: • KLC 51/54 AN001 3,000 scfm. • KLC 51/54 AN002 1,500 scfm. • KLC 51/54 AN003 1,000 scfm. • KLC 52/53 AN001 2,500 scfm. • KLC 52/53 AN002 1,500 scfm.
7.1	The SBVS maintains a negative pressure relative to the outside environment in the hot mechanical areas of the Safeguard Buildings during normal operation.	Tests will be performed on the capability of the SBVS to maintain a negative pressure relative to the outside environment in the hot mechanical areas of the Safeguard Buildings during normal operation.	The SBVS maintains a negative pressure of at least 0.25 inches of water gauge relative to the outside environment in the hot mechanical areas of the Safeguard Buildings during normal operation.

DRAFT

Figure 2.6.6-1—Safeguard Building Controlled-Area V

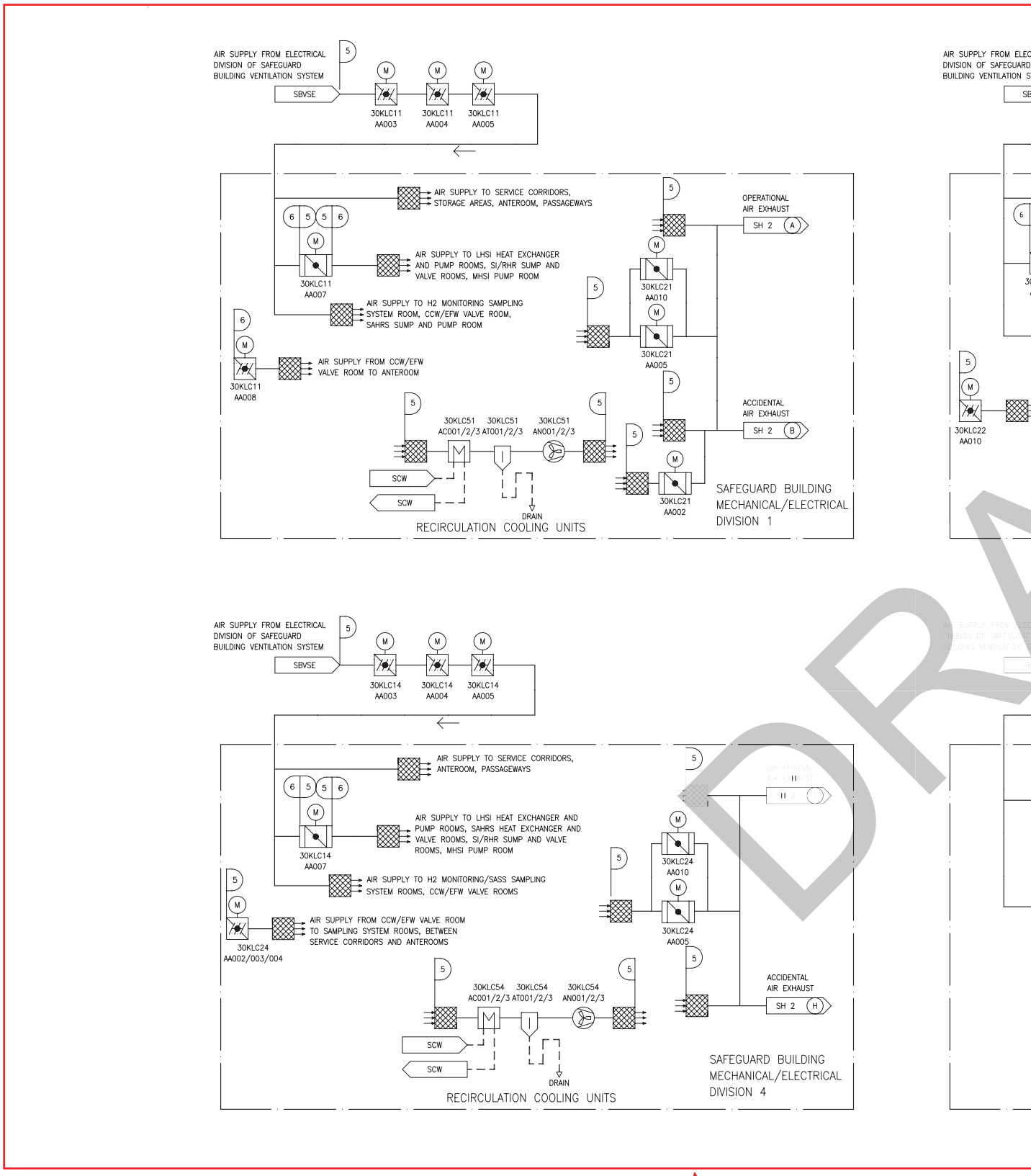

09.04.05-2

Table 2.6.7-3—Electrical Division of Safeguard Building Ventilation System ITAAC (3 Sheets)

Commitment Wording		Inspections, Tests, Analyses	Acceptance Criteria
6.1	Each SBVSE air intake train has the capability to remove the design heat load.~~The SBVSE automatically maintains ambient conditions by recirculation airflows and exhaust airflows within the Safeguard Buildings depending on the outside air temperature.~~ 09.04.01-1	a. An inspection of the manufacturer's documentation of the SBVSE supply air handling unit cooling coils will be performed. b. Test will be performed to verify capability of the SBVSE supply and recirc/exhaust units to maintain ambient conditions within the Electrical Division of the Safeguard Buildings.	a. Verify that each SBVSE 30 SAC 01/02/03/04 AC001 unit has a total cooling capacity of 1,134,900 Btu/hr. b. The test shall confirm that Switchgear Rooms are maintained between 59° F and 104° F, that I&C rooms are maintained between 68° F and 82° F, that all other areas are maintained between 41° F and 104° F. • Verify the SBVSE supply cooling fan has a nominal air flow of 29,500 scfm. • Verify the SBVSE recir/exhaust fan has a nominal air flow of 29,500 scfm.
6.2	The recirculation cooling units start and stop automatically in the emergency feedwater system and the component cooling water system pump rooms when the room temperature reaches preset maximum and minimum temperatures in the pump rooms	A test will be performed to verify that recirculation cooling units start and stop automatically when the pump room temperature reaches preset maximum and minimum temperatures in the pump rooms.	a. The recirculation cooling units start automatically when the pump room temperature is greater than or equal to 95°F. b. The recirculation cooling units stop automatically when the pump room temperature is less than or equal to 85°F.

DRAFT

Next File

09.04.01-1

6.0 Equipment and System Performance

6.1 The EPGBVS provides ventilation and is capable of removing design heat load of each division of EPGBs.

7.0 Inspections, Tests, Analyses and Acceptance Criteria

Table 2.6.9-3 lists the EPGBVS ITAAC.

DRAFT

Table 2.6.9-3—Emergency Power Generating Building Ventilation System ITAAC (3 Sheets)

	Commitment Wording	Inspections, Tests, Analyses	Acceptance Criteria
6.1	The EPGBVS provides ventilation and is capable of removing design heat load of each division of EPGBs.	Tests will be performed to verify capability of the system to maintain design condition within~~the flow rate for each fan in~~ each division in the EPGBs. Test is performed separately for each division.	a. A cooling capacity verification is not required because this system does not contain any cooling coils. b. A test shall confirm for each division the air flow rates for each fan: • Diesel hall supply fan is a nominal 85,000 scfm. • Diesel hall exhaust fan is a nominal 85,000 scfm. • Fuel tank room exhaust fan is a nominal 3,200 scfm. • EDG control/electrical room supply fan is a nominal 6,000 scfm and greater than 1,814 scfm. The test shall confirm for each division (with diesel in operation) that: • The diesel hall temperature is maintained between 59°F and 140°F. • The diesel control/electrical room is maintained between 59°F and 95°F. ~~A separate test for each division verifies the following flow rates for each fan in each division:~~ ~~a. Diesel hall supply fan is greater than or equal to 85,000 scfm.~~

09.04.01-1

DRAFT

Table 2.6.9-3—Emergency Power Generating Building Ventilation System ITAAC (3 Sheets)

Commitment Wording	Inspections, Tests, Analyses	Acceptance Criteria
		~~b. Diesel hall exhaust fan is greater than or equal to 85,000 scfm.~~ ~~c. Fuel tank room exhaust fan is greater than or equal to 3,200 scfm.~~ ~~d. EDG control/electrical room supply fan is less than 6,000 scfm and greater than 1,814 scfm.~~

09.04.01-1

DRAFT

Next File

3.5 Components listed in Table 2.6.13-1 as ASME AG-1 Code are fabricated in accordance with ASME AG-1 Code requirements, including welding requirements.

3.6 Components listed in Table 2.6.13-1 as ASME AG-1 Code are inspected and tested in accordance with ASME AG-1 Code requirements.

4.0 Displays and Controls

4.1 Displays listed in Table 2.6.13-2—Essential Service Water Pump Building Ventilation System Equipment I&C and Electrical Design, are retrievable in the main control room (MCR) and the remote shutdown station (RSS) as listed.

4.2 The ESWPBVS equipment controls are provided in the MCR and RSS as listed in Table 2.6.13-2.

4.3 Equipment listed as being controlled by a priority and actuator control system (PACS) module in Table 2.6.13-2 responds to the state requested by a test signal.

5.0 Electrical Power Design Features

5.1 The equipment designated as Class 1E in Table 2.6.13-2 are powered from the Class 1E division as listed in Table 2.6.13-2 in a normal feed condition.

6.0 Equipment and System Performance

09.04.01-1

6.1 The ESWPBVS provides ventilation and has the capability to remove design heat load for~~of~~ each ESWS Pump Building.

7.0 Inspections, Tests, Analyses and Acceptance Criteria

Table 2.6.13-3 lists the ESWPBVS ITAAC.

DRAFT

Table 2.6.13-3—Essential Service Water Pump Building Ventilation System ITAAC (3 Sheets)

Commitment Wording		Inspections, Tests, Analyses	Acceptance Criteria
5.1	The components designated as Class 1E in Table 2.6.13-2 are powered from the Class 1E division as listed in Table 2.6.13-2 in a normal feed condition.	Testing will be performed for the components designated as Class 1E in Table 2.6.13-2 by providing a test signal in each normally aligned division.	The test signal provided in the normally aligned division is present at the respective Class 1E components identified in Table 2.6.13-2.
6.1	The ESWPBVS provides ventilation and has the capability to remove design heat load for ~~of~~ each ESWPB.	Tests will be performed to verify capability of the system to maintain ambient conditions within ~~the flow rate for each fan in~~ each division in each ESWPB. ~~Test is performed separately for each building.~~	a. Each ESWPBVS Cooling Coil shall be tested and certified to have a total cooling capacity of 1,242,000 Btu/hr capacity b. A separate test for each building verifies that the ambient temperature is between 41° F and 104° F. The nominal supply fan air flow rate for each fan in each division is 115,000 scfm. ~~A separate test for each building verifies the following flow rate for each fan in each division:~~ ~~Supply fan is greater than or equal to 115,000 scfm.~~

09.04.01-1

DRAFT

Next File

Table 1.9-2—U.S. EPR Conformance with Regulatory Guides
Sheet 4 of 19

RG / Rev	Description	U.S. EPR Assessment	FSAR Section(s)
1.40, 03/1973	Qualification Tests of Continuous-Duty Motors Installed Inside the Containment of Water-Cooled Nuclear Power Plants	Y	3.11
1.41, 03/1973	Preoperational Testing of Redundant On-Site Electric Power Systems To Verify Proper Load Group Assignments	Y	14.2
1.43, 05/1973	Control of Stainless Steel Weld Cladding of Low-Alloy Steel Components	Y	5.2.3
1.44, 05/1973	Control of the Use of Sensitized Stainless Steel	Y	3.6.3.3.4
			5.2.3
			6.1.1
1.45, R1, 5/2008	Reactor Coolant Pressure Boundary Leakage Detection Systems	Y	3.6.3
			5.2.5
1.47, 05/1973	Bypassed and Inoperable Status Indication for Nuclear Power Plant Safety Systems	Y	7.1
			7.5.2.2.4
			Table 8.1-1
			8.3.2.2.4
1.50, 05/1973	Control of Preheat Temperature for Welding of Low-Alloy Steel	Y	5.2.3
			6.1.1
1.52, R3	Design, Inspection, and Testing Criteria for Air Filtration and Adsorption Units of Post-Accident Engineered-Safety-Feature Atmosphere Cleanup Systems in Light-Water-Cooled Nuclear Power Plants	Y EXCEPTION (ASME AG-1-2003 and ANSI/ASME N 509-2002 used)	6.2.3.2
			6.4.2.2
			6.5
			9.4.1.1
			9.4.5.1.1
		09.04.03-1	9.4.7.2.1
			12.3.3.3~~.2~~
			12.3.6.5.6
			~~14.2.7~~14.2
1.53, R2	Application of the Single-Failure Criterion to Nuclear Power Plant Protection Systems	Y	7.1
			8.1.4
			8.3.2.2.3
			15.2
			15.3

DRAFT

Table 3.2.2-1—Classification Summary
Sheet 156 of 185

KKS System or Component Code	SSC Description	Safety Classification (Note 15)	Quality Group Classification	Seismic Category (Note 16)	10 CFR 50 Appendix B Program (Note 5)	Locatio (Note 1
SMA01	Manual Hoists	NS	N/A	NSC	No	All
SMZ01	Outdoor Crane	NS-AQ	N/A	II	Yes	UZT
SMJ01	Polar Crane	NS-AQ	N/A	II	Yes	UJA
SMJ07/08/09/10	Steam Generator Cubicle Cranes	NS-AQ	N/A	II	Yes	UJA
((UKE	**Access Building**	NS-AQ	N/A	~~CS~~II	No	UKE
UBZ	**Buried Conduit Duct Bank**	S	N/A	I	Yes	UBZ))
HVAC SYSTEMS						
SAB	**Main Control Room Air Conditioning System**					
30SAB11/14 AT003	Carbon Adsorbers	S	C	I	Yes	UJK
30SAB01/02/03/04 AT004	Demisters	S	C	I	Yes	UJK
30SAB45 AA004	Downstream Exhaust Air Isolation Damper	S	C	I	Yes	UJK
30SAB32 AH001-007	Electric Air Heaters	~~NS-AQ~~S	~~D~~C	~~H~~I	~~No~~Yes	UJK
SAB	Safety-Related Fire Dampers	S	C	I	Yes	UJK

09.04.01-1

DRAFT

Table 3.2.2-1—Classification Summary
Sheet 170 of 185

KKS System or Component Code	SSC Description	Safety Classification (Note 15)	Quality Group Classification	Seismic Category (Note 16)	10 CFR 50 Appendix B Program (Note 5)	Locatio (Note 1
30KLC22 AA010	Dampers, Isolation Div 2 personnal air lock exhaust	S	C	I	Yes	UJH
30KLC12 AA009/010	Dampers, Isolation Div 2 personnal air lock supply	S	C	I	Yes	UJH
30KLC24 AA002-004	Dampers, Isolation Div 4 JMQ rooms	S	C	I	Yes	UJH
30KLC21/22/23/24 AA007/008	Dampers, Isolation Operational Exhaust	S	C	I	Yes	UJH
30KLC11/12/13/14 AA004/005	Dampers, Isolation Operational Supply	S	C	I	Yes	UJH
30KLC45 AA001/002	Dampers, Safeguard Building Isolation	S	C	I	Yes	UJH
30KLC21/22/23/24 AA006	Dampers, Volume Control Operational Exhaust	S	C	I	Yes	UJH
30KLC11/12/13/14 AA003	Dampers, Volume Control Operational Supply	S	C	I	Yes	UJH
30KLC41/42 AN001	Exhaust Fans for KLC filtration Units	S	C	I	Yes	UFA
KLC	Fire Dampers	S ~~NS-AQ~~	C ~~D~~	I ~~II~~	Yes ~~No~~	UJH

09.04.05-2

DRAFT

Table 3.2.2-1—Classification Summary
Sheet 178 of 185

KKS System or Component Code	SSC Description	Safety Classification (Note 15)	Quality Group Classification	Seismic Category (Note 16)	10 CFR 50 Appendix B Program (Note 5)	Locatio (Note 1
KLL	**Fuel Building Ventilation System**					
KLL	Ductwork between KLL and KLC for Iodine Exhaust from the Fuel Handling Hall	S	C	I	Yes	UFA
30KLL21/24 AA001-003	Exhaust Isolation Dampers	S	C	I	Yes	UFA
30KLL21/24 AA004	Fuel Building Exhaust/KLC Isolation Dampers	S	C	I	Yes	UFA
30KLL41/44 AA100/101	Fuel Building Exhaust Air Isolation Dampers	S	C	I	Yes	UFA
30KLL31 AA049	Fuel Building Supply Air Isolation Damper	S	C	I	Yes	UFA
30KLL31/34 AA090	Fuel Building Supply Air Isolation Damper	S	C	I	Yes	UFA
30KLL34 AA065	Fuel Building Supply Air Isolation Damper	S	C	I	Yes	UFA
30KLL61AH010/011 30KLL64AH012-014 ~~KLL~~	Non-Safety Related Electric Heating Units in supply air duct	NS-AQ	D	II	Yes	UFA

09.04.02-1

DRAFT

Table 3.2.2-1—Classification Summary
Sheet 179 of 185

KKS System or Component Code	SSC Description	Safety Classification (Note 15)	Quality Group Classification	Seismic Category (Note 16)	10 CFR 50 Appendix B Program (Note 5)	Locatio (Note 1
30KLL61/64 AC/AT/AN002/003	Recirculation Cooling Units in FAK Pump Rooms	S	C	I	Yes	UFA
30KLL61/64 AC/AT/AN001	Recirculation Cooling Units in JDH Pump Rooms	S	C	I	Yes	UFA
30KLL61/64AH001-004 ~~KLL~~	Safety Related Electric Heating Units in JDH Pump Rooms and Pipe Chase	S	C	I	Yes	UFA
30KLL11/14 AA001-003	Supply Isolation Dampers	S	C	I	Yes	UFA
30KLL11 AA010	Supply Pressure Control Damper	NS-AQ	D	II	Yes	UFA
KLL	Balance of KLL System	NS-AQ	D	II	Yes	UFA
KLL	Exhaust Air Duct	S	C	I	Yes	UFA
30KLL64AH020/021 30KLL61AH022-028	Non-safety-related Space Electric Heating Units	NS	E	NSC	No	UFA
30KLL31AA009 30KLL34AA011	Supply Air Manual Isolation Dampers	NS-AQ	D	II	Yes	UFA
30KLL41AA004 30KLL44AA022	Exhaust Air Manual Isolation Dampers	S	C	I	Yes	UFA

DRAFT

09.04.02-1

Table 3.10-1 List of Seismically and Dynamically Qualified Mechanical and Electrical Equipment
Sheet 135 of 170

Name Tag (Equipment Description)	Tag Number	Local Area KKS ID (Room Location)	EQ Environment (Note 1)	Radiation Environment Zone (Note 2)	EQ Designated Function (Note 3)	Safety Cla (Note 4)
Annulus Ventilation System (AVS)						
MOTOR OPERATED SUPPLY DAMPER (TRAIN 21)	30KLB21AA003	30UFA17084	M	H	ES SI	S
MOTOR OPERATERED EXHAUST DAMPER	30KLB21AA004	30UFA17084	M	H	ES SI	S
BACKDRAFT DAMPER (TRAIN 21)	30KLB21AA006	30UFA17083	M	H	ES SI	S
KLB KLA DP Sens Valv 1	30KLB21AA701	30UFA10052	M	H	SII	NS-AQ
ELECTRIC HEATER (TRAIN 21)	30KLB21AH001	30UFA17084	M	H	ES SI	S
EXHAUST FAN (TRAIN 21)	30KLB21AN001	30UFA17083	M	H	ES SI	S
PRE-FILTER (TRAIN 21)	30KLB21AT001	30UFA17084	M	H	ES SI	S
UPSTREAM HEPA FILTER (TRAIN 21)	30KLB21AT002	30UFA17084	M	H	ES SI	S
IODINE ADSORBER (TRAIN 21)	30KLB21AT003	30UFA17084	M	H	ES SI	S
DOWNSTREAM HEPA FILTER (TRAIN 21)	30KLB21AT004	30UFA17084	M	H	ES SI	S
MOTOR OPERATED SUPPLY DAMPER (TRAIN 24)	30KLB24AA003	30UFA17082	M	H	ES SI	S
MOTOR OPERATED EXHAUST DAMPER (TRAIN 24)	30KLB24AA004	30UFA17082	M	H	ES SI	S
BACKDRAFT DAMPER (TRAIN 24)	30KLB24AA006	30UFA17081	M	H	ES SI	S
KLB KLA DP Sens Valv 2	30KLB24AA701	30UFA13004	M	H	SII	NS-AQ
ELECTRIC HEATER (TRAIN 24)	30KLB24AH001	30UFA17082	M	H	ES SI	S
EXHAUST FAN (TRAIN 24)	30KLB24AN001	30UFA17081	M	H	ES SI	S
PRE-FILTER (TRAIN 24)	30KLB24AT001	30UFA17082	M	H	ES SI	S
UPSTREAM HEPA FILTER (TRAIN 24)	30KLB24AT002	30UFA17082	M	H	ES SI	S
IODINE ADSORBER (TRAIN 24)	30KLB24AT003	30UFA17082	M	H	ES SI	S
DOWNSTREAM HEPA FILTER	30KLB24AT004	30UFA17082	M	H	ES SI	S
SUPPLY MOTOR OPERATED ISOLATION DAMPER	30KLB34AA002	30UFA21095	M	H	ES SI	S
SUPPLY MOTOR OPERATED ISOLATION DAMPER	30KLB34AA003	30UFA21095	M	H	ES SI	S
EXHAUST MOTOR OPERATED ISOLATION DAMPER	30KLB44AA002	30UFA29054	M	H	ES SI	S
EXHAUST MOTOR OPERATED ISOLATION DAMPER	30KLB44AA003	30UFA29054	M	H	ES SI	S
ELECTRIC HEATER (TRAIN 21)	30KLB21AH001	30UFA17084	M	H	ES SI	S
ELECTRIC HEATER (TRAIN 24)	30KLB24AH001	30UFA17082	M	H	ES SI	S
EXHAUST FAN (TRAIN 21)	30KLB21AN001	30UFA17083	M	H	ES SI	S
EXHAUST FAN (TRAIN 24)	30KLB24AN001	30UFA17081	M	H	ES SI	S
KLB KLA DP Sens Valv 1	30KLB21AA701	30UFA10052	M	H	ES SI	S
KLB KLA DP Sens Valv 2 09.04.05-2	30KLB24AA701	30UFA13004	M	H	ES SI	S
Safeguard Building Controlled Area Ventilation System (SBVS)						
fire dmpr sup ICP, SG1	30KLC11AA002	31UJH10004	M	H	SI~~I~~	S ~~NS-AQ~~
vol cont dmpr sup, div 1	30KLC11AA003	31UJH05025	M	H	SI	S
iso dmpr 1 sup, div 1	30KLC11AA004	31UJH05025	M	H	SI	S

DRAFT

Table 3.10-1 List of Seismically and Dynamically Qualified Mechanical and Electrical Equipment
Sheet 136 of 170

09.04.05-2

Name Tag (Equipment Description)	Tag Number	Local Area KKS ID (Room Location)	EQ Environment (Note 1)	Radiation Environment Zone (Note 2)	EQ Designated Function (Note 3)	Safety Cla (Note 4)
iso dmpr 2 sup, div 1	30KLC11AA005	31UJH05025	M	H	SI	S
fire dmpr sup, div 1, SG1	30KLC11AA006	31UJH05008	M	H	SI~~I~~	S ~~NS-AQ~~
sup is dmpr, div 1, SG1	30KLC11AA007	31UJH05006	M	H	SI	S
sup dmpr KAA vlv rm, anteroom, SG1	30KLC11AA008	31UJH10004	M	H	SI~~I~~	S ~~NS-AQ~~
fire dmpr ICP 1, SG2	30KLC12AA002	32UJH10003	M	H	SI~~I~~	S ~~NS-AQ~~
vol cont dmpr sup, div 2	30KLC12AA003	32UJH01020	M	H	SI	S
sup iso dmpr 1, div 2	30KLC12AA004	32UJH01020	M	H	SI	S
sup iso dmpr 2, div 2	30KLC12AA005	32UJH01020	M	H	SI	S
fire dmpr 1 sup, div 2	30KLC12AA006	32UJH01005	M	H	SI~~I~~	S ~~NS-AQ~~
fire dmpr 2 sup, div 2	30KLC12AA008	32UJH01001	M	H	SI~~I~~	S ~~NS-AQ~~
sup iso dmpr 1, air lock, SG2	30KLC12AA009	32UJH10006	M	H	SI	S
sup iso dmpr 2, air lock, SG2	30KLC12AA010	32UJH10006	M	H	SI	S
sup fire dmpr, ICP, SG3	30KLC13AA002	33UJH10003	M	H	SI~~I~~	S ~~NS-AQ~~
vol cont dmpr sup, div 3	30KLC13AA003	33UJH01020	M	H	SI	S
sup iso dmpr 1, div 3	30KLC13AA004	33UJH01020	M	H	SI	S
sup iso dmpr 2, div 3	30KLC13AA005	33UJH01020	M	H	SI	S
sup fire dmpr, serv corr, div 3	30KLC13AA006	33UJH01005	M	H	SI~~I~~	S ~~NS-AQ~~
sup fire dmpr, staircase, div 3	30KLC13AA008	33UJH01001	M	H	SI~~I~~	S ~~NS-AQ~~
sup fire dmpr 1, ICP, SG4	30KLC14AA002	34UJH10002	M	H	SI~~I~~	S ~~NS-AQ~~
vol cont dmpr sup, div 4	30KLC14AA003	34UJH05025	M	H	SI	S
sup iso dmpr 1, div 4	30KLC14AA004	34UJH05025	M	H	SI	S
sup iso dmpr 2, div 4	30KLC14AA005	34UJH05025	M	H	SI	S
sup fire dmpr, serv corr, div 4	30KLC14AA006	34UJH05006	M	H	SI~~I~~	S ~~NS-AQ~~
sup iso dmpr, div 4	30KLC14AA007	34UJH05006	M	H	SI	S
fire dmpr exh ICP, SG1	30KLC21AA001	31UJH10011	M	H	SI~~I~~	S ~~NS-AQ~~
exh iso dmpr, SG1	30KLC21AA005	31UJH10004	M	H	SI	S
oper ex vol cntrl dmpr, div 1	30KLC21AA006	31UJH10010	M	H	SI	S
oper ex iso dmpr 1, div 1	30KLC21AA007	31UJH10010	M	H	SI	S
oper ex iso dmpr 2, div 1	30KLC21AA008	31UJH10010	M	H	SI	S
oper ex fire dmpr, div 1	30KLC21AA009	31UJH10004	M	H	SI~~I~~	S ~~NS-AQ~~
fire dmpr ICP 2, SG2	30KLC22AA001	32UJH10003	M	H	SI~~I~~	S ~~NS-AQ~~
oper ex vol cntrl dmpr, div 2	30KLC22AA006	32UJH10002	M	H	SI	S
oper ex iso dmpr 1, div 2	30KLC22AA007	32UJH10002	M	H	SI	S
oper ex iso dmpr 2, div 2	30KLC22AA008	32UJH10002	M	H	SI	S
oper ex iso dmpr 2, div 2	30KLC22AA009	32UJH10002	M	H	SI~~I~~	S ~~NS-AQ~~
exh iso dmpr, air lock, SG2	30KLC22AA010	32UJH10006	M	H	SI	S
stairwell fire dmpr 1, SG2	30KLC22AA011	32UJH05001	M	H	SI~~I~~	S ~~NS-AQ~~
exh fire dmpr, ICP, SG3	30KLC23AA001	33UJH10003	M	H	SI~~I~~	S ~~NS-AQ~~
oper ex vol cntrl dmpr, div 3	30KLC23AA006	33UJH10002	M	H	SI	S

DRAFT

Table 3.10-1 List of Seismically and Dynamically Qualified Mechanical and Electrical Equipment
Sheet 137 of 170

09.04.05-2

Name Tag (Equipment Description)	Tag Number	Local Area KKS ID (Room Location)	EQ Environment (Note 1)	Radiation Environment Zone (Note 2)	EQ Designated Function (Note 3)	Safety Cla (Note 4)
oper ex iso dmpr 1, div 3	30KLC23AA007	33UJH10002	M	H	SI	S
oper ex iso dmpr 2, div 3	30KLC23AA008	33UJH10002	M	H	SI	S
oper ex fire dmpr, div 3	30KLC23AA009	33UJH10002	M	H	SI~~I~~	S ~~NS-AQ~~
stairwell fire dmpr 1, SG3	30KLC23AA011	33UJH05001	M	H	SI~~I~~	S ~~NS-AQ~~
sup fire dmpr 2, ICP, SG4	30KLC24AA001	34UJH10011	M	H	SI~~I~~	S ~~NS-AQ~~
sup iso dmpr, JMU rm, SG4	30KLC24AA002	34UJH10004	M	H	SI	S
sup iso dmpr, anteroom, div 4	30KLC24AA003	34UJH05006	M	H	SI	S
sup iso dmpr, anteroom, div 4	30KLC24AA004	34UJH01011	M	H	SI	S
exh iso dmpr, div 4	30KLC24AA005	34UJH10004	M	H	SI	S
oper ex vol cntrl dmpr, div 4	30KLC24AA006	34UJH10010	M	H	SI	S
oper ex iso dmpr 1, div 4	30KLC24AA007	34UJH10010	M	H	SI	S
oper ex iso dmpr 2, div 4	30KLC24AA008	34UJH10010	M	H	SI	S
oper ex fire dmpr, div 4	30KLC24AA009	34UJH10004	M	H	SI~~I~~	S ~~NS-AQ~~
acc ex iso dmpr vlv rm, div 1	30KLC31AA001	31UJH10004	M	H	SI	S
acc ex fire dmpr vlv rm, div 1	30KLC31AA002	31UJH10004	M	H	SI~~I~~	S ~~NS-AQ~~
acc ex iso dmpr vlv rm, div 2	30KLC32AA001	32UJH10002	M	H	SI	S
acc ex fire dmpr vlv rm, div 2	30KLC32AA002	32UJH10002	M	H	SI~~I~~	S ~~NS-AQ~~
acc ex iso dmpr vlv rm, div 3	30KLC33AA001	33UJH10002	M	H	SI	S
acc ex fire dmpr vlv rm, div 3	30KLC33AA002	33UJH10002	M	H	SI~~I~~	S ~~NS-AQ~~
acc ex iso dmpr vlv rm, div 4	30KLC34AA001	34UJH10004	M	H	SI	S
acc ex fire dmpr vlv rm, div 4	30KLC34AA002	34UJH10004	M	H	SI~~I~~	S ~~NS-AQ~~
iso dmpr 1, acc ex tr 1	30KLC41AA001	30UFA21082	M	H	SI	S
iso dmpr 2, acc ex tr 1	30KLC41AA002	30UFA21082	M	H	SI	S
check dmpr, acc ex tr 1	30KLC41AA003	30UFA21083	M	H	SI	S
elec air preheater, accident filt tr 1	30KLC41AH001	30UFA21082	M	H	SI	S
exhaust fan, accident filtr tr 1	30KLC41AN001	30UFA21083	M	H	SI	S
prefilter/moisture separator, accident filtr tr 1	30KLC41AT001	30UFA21082	M	H	SI	S
HEPA prefilter, accident filtr tr 1	30KLC41AT002	30UFA21082	M	H	SI	S
iodine filter, accident filtr tr 1	30KLC41AT003	30UFA21082	M	H	SI	S
HEPA postfilter, accident filtr tr 1	30KLC41AT004	30UFA21082	M	H	SI	S
iso dmpr 1, acc ex tr 2	30KLC42AA001	30UFA21084	M	H	SI	S
iso dmpr 2, acc ex tr 2	30KLC42AA002	30UFA21084	M	H	SI	S
check dmpr, acc ex tr 2	30KLC42AA003	30UFA21083	M	H	SI	S
elec air preheater, accident filt tr 2	30KLC42AH001	30UFA21084	M	H	SI	S
exhaust fan, accident filtr tr 2	30KLC42AN001	30UFA21081	M	H	SI	S
prefilter/moisture separator, accident filtr tr 2	30KLC42AT001	30UFA21084	M	H	SI	S
HEPA prefilter, accident filtr tr 2	30KLC42AT002	30UFA21084	M	H	SI	S
iodine filter, accident filtr tr 2	30KLC42AT003	30UFA21084	M	H	SI	S
HEPA postfilter, accident filtr tr 2	30KLC42AT004	30UFA21084	M	H	SI	S

DRAFT

Table 3.10-1 List of Seismically and Dynamically Qualified Mechanical and Electrical Equipment
Sheet 150 of 170

Name Tag (Equipment Description)	Tag Number	Local Area KKS ID (Room Location)	EQ Environment (Note 1)	Radiation Environment Zone (Note 2)	EQ Designated Function (Note 3)	Safety Cla (Note 4)
FIRE DAMPER	30SAC16AA001	32UJH05020	M	H	SI	S
FIRE DAMPER	30SAC16AA002	32UJH05020	M	H	SI	S
FIRE DAMPER	30SAC16AA003	32UJH01020	M	H	SI	S
OUTSIDE AIR ISOLATION DAMPER	30SAC03AA002	33UJK34005	M	M	SI	S
OUTSIDE AIR CONTROL DAMPER	30SAC03AA003	33UJK34005	M	M	SI	S
RECIRC AIR CONTROL DAMPER	30SAC03AA004	33UJK31032	M	M	SI	S
SUPPLY AIR BACKDRAFT DAMPER	30SAC03AA005	33UJK31007	M	M	SI	S
FIRE DAMPER	30SAC16AA004	32UJH01040	M	H	SI	S
FIRE DAMPER	30SAC16AA005	32UJH01040	M	H	SI	S
FIRE DAMPER	30SAC17AA001	33UJH05020	M	H	SI	S
FIRE DAMPER	30SAC17AA002	33UJH05020	M	H	SI	S
FIRE DAMPER	30SAC17AA003	33UJH01020	M	H	SI	S
FIRE DAMPER	30SAC17AA004	33UJH01040	M	H	SI	S
FIRE DAMPER	30SAC17AA005	33UJH01040	M	H	SI	S
FIRE DAMPER	30SAC18AA001	34UJH10022	M	H	SI	S
FIRE DAMPER	30SAC18AA002	34UJH05021	M	H	SI	S
FIRE DAMPER	30SAC18AA003	34UJH05022	M	H	SI	S
FIRE DAMPER	30SAC18AA004	34UJH05021	M	H	SI	S
FIRE DAMPER	30SAC18AA005	34UJH01022	M	H	SI	S
FIRE DAMPER	30SAC18AA006	34UJH05021	M	H	SI	S
FIRE DAMPER	30SAC18AA007	34UJH01022	M	H	SI	S
FIRE DAMPER	30SAC21AA001	31UJK34022	M	M	SI	S
FIRE DAMPER	30SAC21AA003	31UJK34024	M	M	SI	S
Fuel Building Ventilation System (FBVS)						
~~41~~ Air Heater, EPS Pipe Chase ~~Boron RM~~	30KLL64AH003	30UFA060871~~088~~	M	H	SI	S
~~42~~ Air Heater, EPS Pipe Chase ~~Boron RM~~	30KLL64AH004	30UFA060871~~0071~~	M	H	SI	S
~~43 Air Heater, Boron RM~~	~~30KLL64AH005~~	~~30UFA10071~~	~~M~~	~~H~~	~~SI~~	~~S~~
~~44 Air Heater, Boron RM~~	~~30KLL64AH006~~	~~30UFA03057~~	~~M~~	~~H~~	~~SI~~	~~S~~
~~45 Air Heater, Boron RM~~	~~30KLL64AH007~~	~~30UFA03057~~	~~M~~	~~H~~	~~SI~~	~~S~~
~~46 Air Heater, Boron RM~~	~~30KLL64AH008~~	~~30UFA03057~~	~~M~~	~~H~~	~~SI~~	~~S~~
~~47 Air Heater, Boron RM~~	~~30KLL64AH009~~	~~30UFA03057~~	~~M~~	~~H~~	~~SI~~	~~S~~
~~48 Air Heater, Boron RM~~	~~30KLL64AH010~~	~~30UFA03057~~	~~M~~	~~H~~	~~SI~~	~~S~~
~~49 Air Heater, Boron RM~~	~~30KLL64AH011~~	~~30UFA05076~~	~~M~~	~~H~~	~~SI~~	~~S~~
~~50~~ Air Heater, Corridor Duct ~~Boron RM~~	30KLL64AH012	30UFA060575~~076~~	M	H	SII	S ~~NS-AQ~~
~~51~~ Air Heater, Corridor Duct ~~Boron RM~~	30KLL64AH013	30UFA06056~~82~~	M	H	SII	S ~~NS-AQ~~
~~52~~ Air Heater, Corridor Duct ~~Boron RM~~	30KLL64AH014	30UFA240560~~6084~~	M	H	SII	S ~~NS-AQ~~

09.04.02-1

DRAFT

09.04.02-1

Table 3.10-1 List of Seismically and Dynamically Qualified Mechanical and Electrical Equipment
Sheet 151 of 170

Name Tag (Equipment Description)	Tag Number	Local Area KKS ID (Room Location)	EQ Environment (Note 1)	Radiation Environment Zone (Note 2)	EQ Designated Function (Note 3)	Safety Cla (Note 4)
~~53 Air Heater, Boron RM~~	~~30KLL64AH015~~	~~30UFA06085~~	~~M~~	~~H~~	~~SI~~	~~S~~
~~54 Air Heater, Boron RM~~	~~30KLL64AH016~~	~~30UFA06086~~	~~M~~	~~H~~	~~SI~~	~~S~~
~~55 Air Heater, Boron RM~~	~~30KLL64AH017~~	~~30UFA06095~~	~~M~~	~~H~~	~~SI~~	~~S~~
~~56 Air Heater, Boron RM~~	~~30KLL64AH018~~	~~30UFA06095~~	~~M~~	~~H~~	~~SI~~	~~S~~
~~57 Air Heater, Boron RM~~	~~30KLL64AH019~~	~~30UFA10070~~	~~M~~	~~H~~	~~SI~~	~~S~~
~~58 Air Heater, Boron RM~~	~~30KLL64AH020~~	~~30UFA10082~~	~~M~~	~~H~~	~~SI~~	~~S~~
~~59 Air Heater, Boron RM~~	~~30KLL64AH021~~	~~30UFA10089~~	~~M~~	~~H~~	~~SI~~	~~S~~
~~60 Air Heater, Boron RM~~	~~30KLL64AH022~~	~~30UFA10095~~	~~M~~	~~H~~	~~SI~~	~~S~~
~~61 Air Heater, Boron RM~~	~~30KLL64AH023~~	~~30UFA10095~~	~~M~~	~~H~~	~~SI~~	~~S~~
~~62 Air Heater, Boron RM~~	~~30KLL64AH024~~	~~30UFA13025~~	~~M~~	~~H~~	~~SI~~	~~S~~
~~63 Air Heater, Boron RM~~	~~30KLL64AH025~~	~~30UFA13025~~	~~M~~	~~H~~	~~SI~~	~~S~~
~~64 Air Heater, Boron RM~~	~~30KLL64AH026~~	~~30UFA13025~~	~~M~~	~~H~~	~~SI~~	~~S~~
~~65 Air Heater, Boron RM~~	~~30KLL64AH027~~	~~30UFA13025~~	~~M~~	~~H~~	~~SI~~	~~S~~
~~66 Air Heater, Boron RM~~	~~30KLL64AH028~~	~~30UFA13070~~	~~M~~	~~H~~	~~SI~~	~~S~~
~~67 Air Heater, Boron RM~~	~~30KLL64AH029~~	~~30UFA13070~~	~~M~~	~~H~~	~~SI~~	~~S~~
~~68 Air Heater, Boron RM~~	~~30KLL64AH030~~	~~30UFA17025~~	~~M~~	~~H~~	~~SI~~	~~S~~
~~69 Air Heater, Boron RM~~	~~30KLL64AH031~~	~~30UFA17025~~	~~M~~	~~H~~	~~SI~~	~~S~~
~~70 Air Heater, Boron RM~~	~~30KLL64AH032~~	~~30UFA17057~~	~~M~~	~~H~~	~~SI~~	~~S~~
~~71 Air Heater, Boron RM~~	~~30KLL64AH033~~	~~30UFA17057~~	~~M~~	~~H~~	~~SI~~	~~S~~
~~72 Air Heater, Boron RM~~	~~30KLL64AH034~~	~~30UFA17056~~	~~M~~	~~H~~	~~SI~~	~~S~~
~~73 Air Heater, Boron RM~~	~~30KLL64AH035~~	~~30UFA17056~~	~~M~~	~~H~~	~~SI~~	~~S~~
~~74 Air Heater, Boron RM~~	~~30KLL64AH036~~	~~30UFA17072~~	~~M~~	~~H~~	~~SI~~	~~S~~
~~75 Air Heater, Boron RM~~	~~30KLL64AH037~~	~~30UFA17072~~	~~M~~	~~H~~	~~SI~~	~~S~~
~~93 Air Heater, Boron RM~~	~~30KLL64AH059~~	~~30UFA10070~~	~~M~~	~~H~~	~~SI~~	~~S~~
~~94 Air Heater, Boron RM~~	~~30KLL64AH062~~	~~30UFA01083~~	~~M~~	~~H~~	~~SI~~	~~S~~
~~95 Air Heater, Boron RM~~	~~30KLL64AH063~~	~~30UFA01083~~	~~M~~	~~H~~	~~SI~~	~~S~~
~~96 Air Heater, Boron RM~~	~~30KLL64AH065~~	~~30UFA01085~~	~~M~~	~~H~~	~~SI~~	~~S~~
~~97 Air Heater, Boron RM~~	~~30KLL64AH066~~	~~30UFA01085~~	~~M~~	~~H~~	~~SI~~	~~S~~
~~76 Air Heater, Boron RM~~	~~30KLL64AH038~~	~~30UFA21057~~	~~M~~	~~H~~	~~SI~~	~~S~~
~~77 Air Heater, Boron RM~~	~~30KLL64AH039~~	~~30UFA21057~~	~~M~~	~~H~~	~~SI~~	~~S~~
~~78 Air Heater, Boron RM~~	~~30KLL64AH040~~	~~30UFA21057~~	~~M~~	~~H~~	~~SI~~	~~S~~
~~79 Air Heater, Boron RM~~	~~30KLL64AH042~~	~~30UFA21072~~	~~M~~	~~H~~	~~SI~~	~~S~~
~~80 Air Heater, Boron RM~~	~~30KLL64AH043~~	~~30UFA21072~~	~~M~~	~~H~~	~~SI~~	~~S~~
~~81 Air Heater, Boron RM~~	~~30KLL64AH044~~	~~30UFA21095~~	~~M~~	~~H~~	~~SI~~	~~S~~
~~82 Air Heater, Boron RM~~	~~30KLL64AH045~~	~~30UFA21095~~	~~M~~	~~H~~	~~SI~~	~~S~~
~~83 Air Heater, Boron RM~~	~~30KLL64AH046~~	~~30UFA21095~~	~~M~~	~~H~~	~~SI~~	~~S~~
~~84 Air Heater, Boron RM~~	~~30KLL64AH047~~	~~30UFA17025~~	~~M~~	~~H~~	~~SI~~	~~S~~
~~85 Air Heater, Boron RM~~	~~30KLL64AH048~~	~~30UFA24070~~	~~M~~	~~H~~	~~SI~~	~~S~~
~~86 Air Heater, Boron RM~~	~~30KLL64AH049~~	~~30UFA24070~~	~~M~~	~~H~~	~~SI~~	~~S~~

DRAFT

09.04.02-1

Table 3.10-1 List of Seismically and Dynamically Qualified Mechanical and Electrical Equipment
Sheet 152 of 170

Name Tag (Equipment Description)	Tag Number	Local Area KKS ID (Room Location)	EQ Environment (Note 1)	Radiation Environment Zone (Note 2)	EQ Designated Function (Note 3)	Safety Cla (Note 4)
~~87 Air Heater, Boron RM~~	~~30KLL64AH050~~	~~30UFA24072~~	~~M~~	~~H~~	~~SI~~	~~S~~
~~88 Air Heater, Boron RM~~	~~30KLL64AH051~~	~~30UFA24072~~	~~M~~	~~H~~	~~SI~~	~~S~~
~~89 Air Heater, Boron RM~~	~~30KLL64AH052~~	~~30UFA24080~~	~~M~~	~~H~~	~~SI~~	~~S~~
~~90 Air Heater, Boron RM~~	~~30KLL64AH053~~	~~30UFA24080~~	~~M~~	~~H~~	~~SI~~	~~S~~
~~91 Air Heater, Boron RM~~	~~30KLL64AH054~~	~~30UFA24095~~	~~M~~	~~H~~	~~SI~~	~~S~~
~~92 Air Heater, Boron RM~~	~~30KLL64AH055~~	~~30UFA24095~~	~~M~~	~~H~~	~~SI~~	~~S~~
~~98 Air Heater, Boron RM~~	~~30KLL64AH069~~	~~30UFA05054~~	~~M~~	~~H~~	~~SI~~	~~S~~
~~99 Air Heater, Boron RM~~	~~30KLL64AH070~~	~~30UFA05054~~	~~M~~	~~H~~	~~SI~~	~~S~~
~~100 Air Heater, Boron RM~~	~~30KLL64AH071~~	~~30UFA05076~~	~~M~~	~~H~~	~~SI~~	~~S~~
~~101 Air Heater, Boron RM~~	~~30KLL64AH077~~	~~30UFA17025~~	~~M~~	~~H~~	~~SI~~	~~S~~
~~102 Air Heater, Boron RM~~	~~30KLL64AH078~~	~~30UFA24081~~	~~M~~	~~H~~	~~SI~~	~~S~~
~~103 Air Heater, Boron RM~~	~~30KLL64AH079~~	~~30UFA24081~~	~~M~~	~~H~~	~~SI~~	~~S~~
~~104 Air Heater, Boron RM~~	~~30KLL64AH080~~	~~30UFA24095~~	~~M~~	~~H~~	~~SI~~	~~S~~
~~105 Air Heater, Boron RM~~	~~30KLL64AH084~~	~~30UFA06082~~	~~M~~	~~H~~	~~SI~~	~~S~~
~~106 Air Heater, Boron RM~~	~~30KLL64AH085~~	~~30UFA10082~~	~~M~~	~~H~~	~~SI~~	~~S~~
~~107 Air Heater, Boron RM~~	~~30KLL64AH086~~	~~30UFA01088~~	~~M~~	~~H~~	~~SI~~	~~S~~
~~108 Air Heater, Boron RM~~	~~30KLL64AH087~~	~~30UFA03057~~	~~M~~	~~H~~	~~SI~~	~~S~~
~~109 Air Heater, Boron RM~~	~~30KLL64AH092~~	~~30UFA06084~~	~~M~~	~~H~~	~~SI~~	~~S~~
~~110 Air Heater, Boron RM~~	~~30KLL64AH093~~	~~30UFA06085~~	~~M~~	~~H~~	~~SI~~	~~S~~
~~111 Air Heater, Boron RM~~	~~30KLL64AH094~~	~~30UFA06086~~	~~M~~	~~H~~	~~SI~~	~~S~~
~~112 Air Heater, Boron RM~~	~~30KLL64AH095~~	~~30UFA06095~~	~~M~~	~~H~~	~~SI~~	~~S~~
~~114 Air Heater, Boron RM~~	~~30KLL64AH097~~	~~30UFA10089~~	~~M~~	~~H~~	~~SI~~	~~S~~
~~115 Air Heater, Boron RM~~	~~30KLL64AH098~~	~~30UFA10095~~	~~M~~	~~H~~	~~SI~~	~~S~~
~~4~~ Recirc Fan, Ex Borating Pump RM	30KLL64AN001	30UFA01088	M	H	SI	S
~~5~~ Recirc Fan, FP Cooling Pump RM	30KLL64AN002	30UFA01076	M	H	SI	S
~~6~~ Recirc Fan, FP Cooling Pump RM	30KLL64AN003	30UFA01077	M	H	SI	S
~~2~~ Moist Sep, Ex Boratng Pump RM	30KLL64AT001	30UFA01088~~6089~~	M	H	SI	S
~~1~~ Recirc Cooling Coils, Ex Borating Pump	30KLL61AC001	30UFA01038~~6039~~	M	H	SI	S
~~2~~ Recirc Cooling Coils, FP Cooling Pump	30KLL61AC002	30UFA01026	M	H	SI	S
~~3~~ Recirc Cooling Coils, FP Cooling Pump	30KLL61AC003	30UFA05082~~1027~~	M	H	SI	S
Moist Sep, FP Cooling Pump RM	30KLL61AT002	30UFA01026	M	H	SI	S
Moist Sep, FP Cooling Pump RM	30KLL61AT003	30UFA05082	M	H	SI	S
~~1~~ Air Heater, EBS Pump Room ~~Boron RM~~	30KLL61AH001	30UFA01038	M	H	SI	S
~~2~~ Air Heater, EBS Pump Room ~~Boron RM~~	30KLL61AH002	30UFA01038~~5~~	M	H	SI	S
~~3~~ Air Heater, EBS Pipe Chase ~~Boron RM~~	30KLL61AH003	30UFA06039~~1035~~	M	H	SI	S
~~4~~ Air Heater, EBS Pipe Chase ~~Boron RM~~	30KLL61AH004	30UFA06039~~3006~~	M	H	SI	S
~~5 Air Heater, Boron RM~~	~~30KLL61AH005~~	~~30UFA03006~~	~~M~~	~~H~~	~~SI~~	~~S~~
~~6 Air Heater, Boron RM~~	~~30KLL61AH008~~	~~30UFA06035~~	~~M~~	~~H~~	~~SI~~	~~S~~
~~7 Air Heater, Boron RM~~	~~30KLL61AH009~~	~~30UFA06035~~	~~M~~	~~H~~	~~SI~~	~~S~~

DRAFT

09.04.02-1

Table 3.10-1 List of Seismically and Dynamically Qualified Mechanical and Electrical Equipment
Sheet 153 of 170

Name Tag (Equipment Description)	Tag Number	Local Area KKS ID (Room Location)	EQ Environment (Note 1)	Radiation Environment Zone (Note 2)	EQ Designated Function (Note 3)	Safety Cla (Note 4)
~~8~~ Air Heater, Loading Hall Duct ~~Boron RM~~	30KLL61AH010	30UFA100150~~6036~~	M	H	SII	S ~~NS-AQ~~
~~9~~ Air Heater, Pipe Pene. Duct ~~Boron RM~~	30KLL61AH011	30UFA150450~~6036~~	M	H	SII	S ~~NS-AQ~~
~~10 Air Heater, Boron RM~~	~~30KLL61AH012~~	~~30UFA01049~~	~~M~~	~~H~~	~~SI~~	~~S~~
~~11 Air Heater, Boron RM~~	~~30KLL61AH013~~	~~30UFA01049~~	~~M~~	~~H~~	~~SI~~	~~S~~
~~12 Air Heater, Boron RM~~	~~30KLL61AH014~~	~~30UFA06045~~	~~M~~	~~H~~	~~SI~~	~~S~~
~~13 Air Heater, Boron RM~~	~~30KLL61AH015~~	~~30UFA06045~~	~~M~~	~~H~~	~~SI~~	~~S~~
~~14 Air Heater, Boron RM~~	~~30KLL61AH018~~	~~30UFA10039~~	~~M~~	~~H~~	~~SI~~	~~S~~
~~15 Air Heater, Boron RM~~	~~30KLL61AH019~~	~~30UFA10045~~	~~M~~	~~H~~	~~SI~~	~~S~~
~~16 Air Heater, Boron RM~~	~~30KLL61AH020~~	~~30UFA10045~~	~~M~~	~~H~~	~~SI~~	~~S~~
~~17 Air Heater, Boron RM~~	~~30KLL61AH023~~	~~30UFA13071~~	~~M~~	~~H~~	~~SI~~	~~S~~
~~18 Air Heater, Boron RM~~	~~30KLL61AH024~~	~~30UFA13071~~	~~M~~	~~H~~	~~SI~~	~~S~~
~~19 Air Heater, Boron RM~~	~~30KLL61AH025~~	~~30UFA03006~~	~~M~~	~~H~~	~~SI~~	~~S~~
~~20 Air Heater, Boron RM~~	~~30KLL61AH026~~	~~30UFA15045~~	~~M~~	~~H~~	~~SI~~	~~S~~
~~21 Air Heater, Boron RM~~	~~30KLL61AH027~~	~~30UFA15045~~	~~M~~	~~H~~	~~SI~~	~~S~~
~~22 Air Heater, Boron RM~~	~~30KLL61AH028~~	~~30UFA15045~~	~~M~~	~~H~~	~~SI~~	~~S~~
~~23 Air Heater, Boron RM~~	~~30KLL61AH029~~	~~30UFA18045~~	~~M~~	~~H~~	~~SI~~	~~S~~
~~24 Air Heater, Boron RM~~	~~30KLL61AH030~~	~~30UFA18045~~	~~M~~	~~H~~	~~SI~~	~~S~~
~~25 Air Heater, Boron RM~~	~~30KLL61AH032~~	~~30UFA21045~~	~~M~~	~~H~~	~~SI~~	~~S~~
~~26 Air Heater, Boron RM~~	~~30KLL61AH033~~	~~30UFA21045~~	~~M~~	~~H~~	~~SI~~	~~S~~
~~27 Air Heater, Boron RM~~	~~30KLL61AH035~~	~~30UFA18045~~	~~M~~	~~H~~	~~SI~~	~~S~~
~~28 Air Heater, Boron RM~~	~~30KLL61AH039~~	~~30UFA24071~~	~~M~~	~~H~~	~~SI~~	~~S~~
~~29 Air Heater, Boron RM~~	~~30KLL61AH042~~	~~30UFA01033~~	~~M~~	~~H~~	~~SI~~	~~S~~
~~30 Air Heater, Boron RM~~	~~30KLL61AH043~~	~~30UFA01033~~	~~M~~	~~H~~	~~SI~~	~~S~~
~~31 Air Heater, Boron RM~~	~~30KLL61AH044~~	~~30UFA01033~~	~~M~~	~~H~~	~~SI~~	~~S~~
~~32 Air Heater, Boron RM~~	~~30KLL61AH048~~	~~30UFA24071~~	~~M~~	~~H~~	~~SI~~	~~S~~
~~33 Air Heater, Boron RM~~	~~30KLL61AH049~~	~~30UFA05004~~	~~M~~	~~H~~	~~SI~~	~~S~~
~~34 Air Heater, Boron RM~~	~~30KLL61AH050~~	~~30UFA05004~~	~~M~~	~~H~~	~~SI~~	~~S~~
~~35 Air Heater, Boron RM~~	~~30KLL61AH053~~	~~30UFA01038~~	~~M~~	~~H~~	~~SI~~	~~S~~
~~36 Air Heater, Boron RM~~	~~30KLL61AH055~~	~~30UFA10039~~	~~M~~	~~H~~	~~SI~~	~~S~~
~~37 Air Heater, Boron RM~~	~~30KLL61AH056~~	~~30UFA06045~~	~~M~~	~~H~~	~~SI~~	~~S~~
~~38 Air Heater, Boron RM~~	~~30KLL61AH058~~	~~30UFA10045~~	~~M~~	~~H~~	~~SI~~	~~S~~
~~1~~ Recirc Fan, Ex Borating Pump RM	30KLL61AN001	30UFA01038	M	H	SI	S
~~2~~ Recirc Fan, FP Cooling Pump RM	30KLL61AN002	30UFA01026	M	H	SI	S
~~3~~ Recirc Fan, FP Cooling Pump RM	30KLL61AN003	30UFA050821~~027~~	M	H	SI	S
~~1~~ Moist Sep, Ex Borating Pump RM	30KLL61AT001	30UFA010386~~039~~	M	H	SI	S
~~4~~ Recirc Cooling Coils, Ex Borating Pump	30KLL64AC001	30UFA010886~~089~~	M	H	SI	S
~~5~~ Recirc Cooling Coils, FP Cooling Pump	30KLL64AC002	30UFA01076	M	H	SI	S
~~6~~ Recirc Cooling Coils FP Cooling Pump R	30KLL64AC003	30UFA01077	M	H	SI	S
Moist Sep, FP Cooling Pump RM	30KLL64AT002	30UFA01076	M	H	SI	S

DRAFT

09.04.02-1

Table 3.10-1 List of Seismically and Dynamically Qualified Mechanical and Electrical Equipment
Sheet 154 of 170

Name Tag (Equipment Description)	Tag Number	Local Area KKS ID (Room Location)	EQ Environment (Note 1)	Radiation Environment Zone (Note 2)	EQ Designated Function (Note 3)	Safety Cla (Note 4)
Moist Sep, FP Cooling Pump RM	30KLL64AT003	30UFA01077	M	H	SI	S
~~39~~ Air Heater, EBS Pump Room ~~Boron RM~~	30KLL64AH001	30UFA01088~~2~~	M	H	SI	S
~~40~~ Air Heater, EBS Pump Room ~~Boron RM~~	30KLL64AH002	30UFA01088~~2~~	M	H	SI	S
Sup Iso Dmpr, Fuel Hdlg Hall Div 1	30KLL11AA002	30UFA29045	M	H	SI	S
Sup Iso Dmpr, Emer Airlock Div 1	30KLL11AA003	30UFA29005	M	H	SI	S
Sup Iso Dmpr, Equip Hatch Div 4	30KLL14AA001	30UFA29090	M	H	SI	S
Sup Iso Dmpr, Fuel Hdlg Hall Div 4	30KLL14AA002	30UFA29015~~90~~	M	H	SI	S
Sup Iso Dmpr, Emer Airlock Div 4	30KLL14AA003	30UFA29004	M	H	SI	S
Exh Iso Dmpr, Emer Airlock Div 1 ~~KLL24 Louver Damper~~	30KLL21AA003	30UFA29005	M	H	SI	S
Exh Iso Dmpr, Equip Hatch Div 4	30KLL24AA001	30UFA29090	M	H	SI	S
Exh Iso Dmpr, Fuel Hdlg Hall Div 4	30KLL24AA002	30UFA29045	M	H	SI	S
Supp Iso Dmpr Equip Hatch ~~KLL11 Louver Damper~~	30KLL11AA001	30UFA29090	M	H	SI	S
Exh Iso Dmpr Equip Hatch ~~KLL21 Louver Damper~~	30KLL21AA001	30UFA29090	M	H	SI	S
Sup Iso/Cntr Dmpr (KLE to KLL - Cell 5)	30KLL31AA049	30UFA24045	M	H	SI	S
Sup Iso Dmpr (KLE to KLL - Cell 5)	30KLL34AA090	30UFA24045	M	H	SI	S
Exh Iso Dmpr (KLL - Cell 5 to KLE)	30KLL41AA101	30UFA24056	M	H	SI	S
Exh Iso Dmpr (KLL - Cell 5 to KLE)	30KLL44AA101	30UFA24056	M	H	SI	S
Sup Iso/Cntr Dmpr (KLE to KLL - Cell 4)	30KLL34AA065	30UFA24095	M	H	SI	S
Sup Iso Dmpr (KLE to KLL - Cell 4)	30KLL31AA090	30UFA24095	M	H	SI	S
Exh Iso Dmpr (KLL - Cell 4 to KLE)	30KLL41AA100	30UFA29054	M	H	SI	S
Exh Iso Dmpr (KLL - Cell 4 to KLE)	30KLL44AA100	30UFA29054	M	H	SI	S
Sup Iso/Cntr Dmpr, Fuel Pool Flr	30KLL11AA010	30UFA29015	M	H	SII	NS-AQ
Exh Iso Dmpr, Fuel Pool Flr to KLC	30KLL21AA002	30UFA29015	M	H	SI	S
Exh Iso Dmpr (KLL - Cell 4 to KLE)	30KLL21AA004	30UFA29015	M	H	SI	S
Exh Iso Dmpr (KLL - Cell 4 to KLE)	30KLL24AA004	30UFA29015	M	H	SI	S
Exh Iso Dmpr, Emer Airlock	30KLL24AA003	30UFA29005	M	H	SI	S
Main Control Room Air Conditioning System (CRACS)						
Makeup Air Pre-filters - Div 4	30SAB04AT001	33UJK31034	M	M	SI	S
Moisture / Condensate Separator - Div 4	30SAB04AT004	33UJK31034	M	M	SI	S
Recirc. HEPA Filter - Div 4	30SAB04AT005	33UJK31034	M	M	SI	S
Recirc. Return Silencer - Div 4	30SAB04BS001	33UJK31034	M	M	SI	S
Recirc. Fan Inlet Silencer - Div 4	30SAB04BS002	33UJK31034	M	M	SI	S
Recirc. Fan Outlet Silencer - Div 4	30SAB04BS003	33UJK31034	M	M	SI	S
Iodine Filtr. Booster Fan - Div 1	30SAB11AN001	32UJK31034	M	M	SI	S
Iodine Filtr. Pre-filter - Div 1	30SAB11AT001	32UJK31034	M	M	SI	S
Iodine Filtr. Inlet HEPA Filter - Div 1	30SAB11AT002	32UJK31034	M	M	SI	S

DRAFT

Table 3.10-1 List of Seismically and Dynamically Qualified Mechanical and Electrical Equipment

Sheet 158 of 170

Name Tag (Equipment Description)	Tag Number	Local Area KKS ID (Room Location)	EQ Environment (Note 1)	Radiation Environment Zone (Note 2)	EQ Designated Function (Note 3)	Safety Cla (Note 4)
Interconnect Passage Exhaust Fire Damp-B	30SAB42AA007	32UJK26020	M	M	SI	S
SICS1/Computer Rm1 Exhaust Air Fire Damp	30SAB42AA008	32UJK26002	M	M	SI	S
MCR Exhaust Fire Damper	30SAB42AA010	32UJK26031	M	M	SI	S
TechSupport Exhaust Fire Damper	30SAB42AA013	33UJK26006	M	M	SI	S
I&CServ/SpecialUse Exhaust Fire Damp	30SAB42AA015	33UJK26044	M	M	SI	S
Tag/ShiftOffice Exhaust Fire Damper	30SAB42AA017	32UJK26029	M	M	SI	S
Exhaust Air Fire Damper	30SAB45AA001	32UJK31020	M	M	SI	S
Bathrooms Exhaust Air Fire Damper	30SAB45AA008	32UJK26020	M	M	SI	S
Kitchen Exhaust Fire Damper	30SAB45AA009	33UJK26033	M	M	SI	S
SAB11 Filtr Train Iso dmpr dwnstrm	30SAB11AA003	32UJK31034	M	M	SI	S
SAB11 Filtration Trn Elec Preheater	30SAB11AH001	32UJK31034	M	M	SI	S
SAB14 Iodine Filtration Train Check Dmpr	30SAB14AA002	33UJK31034	M	M	SI	S
SAB14 Filtr Train Iso Dmpr Dwnstrm	30SAB14AA003	33UJK31034	M	M	SI	S
SAB14 Iodine filtration train preheater	30SAB14AH001	33UJK31034	M	M	SI	S
Electric Duct Heater Division 2	30SAB32AH001	32UJK26030	M	M	SI	S
Electric Duct Heater Division 3	30SAB32AH002	33UJK26030	M	M	SI	S
Electric Duct Heater Division 2	30SAB32AH003	32UJK26015	M	M	SI	S
Electric Duct Heater Division 3	30SAB32AH004	33UJK26044	M	M	SI	S
Electric Duct Heater Division 3	30SAB32AH005	33UJK26034	M	M	SI	S
Electric Duct Heater Division 3	30SAB32AH006	33UJK26032	M	M	SI	S
Electric Duct Heater Division 3	30SAB32AH007	33UJK26030	M	M	SI	S
Essential Service Water Pump Building Ventilation System (ESWPBVS)						
Recirc Chiller Bldg 1	30SAQ01AC001	31UQB02001	M	M	SI	S
Elec Heater Bldg 1	30SAQ01AH001	31UQB02001	M	M	SI	S
Recirc Fan Bldg 1	30SAQ01AN001	31UQB02001	M	M	SI	S
Impact Sep Bldg 1	30SAQ01AT001	31UQB02001	M	M	SI	S
Recirc Chiller Bldg 2	30SAQ02AC001	32UQB02001	M	M	SI	S
Elec Heater Bldg 2	30SAQ02AH001	32UQB02001	M	M	SI	S
Recirc Fan Bldg 2	30SAQ02AN001	32UQB02001	M	M	SI	S
Impact Sep Bldg 2	30SAQ02AT001	32UQB02001	M	M	SI	S
Recirc Chiller Bldg 3	30SAQ03AC001	33UQB02001	M	M	SI	S
Elec Heater Bldg 3	30SAQ03AH001	33UQB02001	M	M	SI	S
Recirc Fan Bldg 3	30SAQ03AN001	33UQB02001	M	M	SI	S
Impact Sep Bldg 3	30SAQ03AT001	33UQB02001	M	M	SI	S
Recirc Chiller Bldg 4	30SAQ04AC001	34UQB02001	M	M	SI	S
Elec Heater Bldg 4	30SAQ04AH001	34UQB02001	M	M	SI	S
Recirc Fan Bldg 4	30SAQ04AN001	34UQB02001	M	M	SI	S

09.04.01-1

DRAFT

Table 3.11-1—List of Environmentally Qualified Electrical/I&C Equipment
Sheet 84 of 98

Name Tag (Equipment Description)	Tag Number	Local Area KKS ID (Room Location)	EQ Environment (Note 1)	Radiation Environment Zone (Note 2)	EQ Designated Function (Note 3)	Safety Class (Note 4)
SUPPLY AIR TEMPERATURE SENSOR	30SAC01CT502	31UJK22026	M	M	SI	S 1E EMC
BATTERY ROOM SUPPLY AIR FLOW SENSOR	30SAC14CF001	34UJK18027	M	M	SI	S 1E EMC
BATTERY RM SUPPLY AIR FLOW SENSOR	30SAC14CF002	34UJK14026	M	M	SI	S 1E EMC
SUPPLY AIR FLOW SENSOR	30SAC14CF003	34UJK26026	M	M	SI	S 1E EMC
POSITION INDICATOR MAINT SUPPLY AIR	30SAC14CG003A	34UJK22024	M	M	SI	S 1E EMC
POSITION INDICATOR MAINT SUPPLY AIR	30SAC14CG003B	34UJK22024	M	M	SI	S 1E EMC
BATTERY ROOM SUPPLY AIR TEMP SENSOR	30SAC14CT001	34UJK18027	M	M	SI	S 1E EMC
BATTERY RM AIR TEMPERATURE SENSOR	30SAC14CT002	34UJK18028	M	M	SI	S 1E EMC
I&C AREA TEMPERATURE SENSOR	30SAC14CT003	34UJK18024	M	M	SI	S 1E EMC
BATTERY RM SUPPLY AIR TEMPERATURE SENSOR	30SAC14CT004	34UJH01026	M	H	SI	S 1E EMC
BATTERY ROOM AIR TEMPERATURE SENSOR	30SAC14CT005	34UJK14028	M	M	SI	S 1E EMC
SWITCHGEAR RM AIR TEMP SENSOR	30SAC14CT006	34UJK18026	M	M	SI	S 1E EMC
SUPPLY AIR HEATER TEMPERATURE SEN	30SAC14CT008	34UJK26024	M	M	SI	S 1E EMC
RM AIR TEMPERATURE SENSOR	30SAC14CT009	34UJK26026	M	M	SI	S 1E EMC
SUPPLY AIR FLOW SENSOR	30SAC15CF001	31UJH10024	M	H	SI	S 1E EMC
SUPPLY AIR HEATER TEMPERATURE SEN	30SAC15CT001	31UJH10024	M	H	SI	S 1E EMC
RM AIR TEMPERATURE SENSOR	30SAC15CT002	31UJH10024	M	H	SI	S 1E EMC
POSITION INDICATOR INLET CONTROL DAMPER	30SAC03CG003	33UJK34005	M	M	SI	S 1E EMC
POSITION INDICATOR RECIRC CONTROL DAMPER	30SAC03CG004	33UJK31018	M	M	SI	S 1E EMC
SUPPLY AIR HUMIDITY SENSOR	30SAC03CM002	33UJK31005	M	M	SI	S 1E EMC
SUPPLY AIR HUMIDITY SENSOR	30SAC03CM003	33UJK31005	M	M	SI	S 1E EMC
PRE FILTER DIFF PRESSURE SENSOR	30SAC03CP501	33UJK31018	M	M	SI	S 1E EMC
FILTER DIFFERENTIAL PRESSURE SENSOR	30SAC03CP502	33UJK31018	M	M	SI	S 1E EMC
OUTSIDE AIR TEMPERATURE SENSOR	30SAC03CT001	33UJK38006	M	M	SI	S 1E EMC
OUTSIDE AIR TEMPERATURE SENSOR	30SAC03CT002	33UJK38006	M	M	SI	S 1E EMC
SUPPLY AIR TEMPERATURE SENSOR	30SAC03CT003	33UJK34008	M	M	SI	S 1E EMC
SUPPLY AIR TEMPERATURE SENSOR	30SAC03CT004	33UJK34008	M	M	SI	S 1E EMC
SUPPLY AIR TEMPERATURE SENSOR	30SAC03CT005	33UJK34008	M	M	SI	S 1E EMC
SUPPLY AIR FLOW SENSOR	30SAC18CF001	34UJH10024	M	H	SI	S 1E EMC
SUPPLY AIR HEATER TEMPERATURE SEN	30SAC18CT001	34UJH10024	M	H	SI	S 1E EMC
RM AIR TEMPERATURE SENSOR	30SAC18CT002	34UJH10024	M	H	SI	S 1E EMC
Fuel Building Ventilation System (FBVS)						
Emer Pushbutton FP	30KLL10EY001	30UFA29015	M	H	SI	S 1E EMC
Emer Pushbutton FP	30KLL10EY002	30UFA29015	M	H	SI	S 1E EMC
Supp Iso Dmpr Equip Hatch ~~KLL11 Louver Damper~~	30KLL11AA001	30UFA29090	M	H	SI	S 1E EMC
Sup Iso Dmpr, Fuel Hdlg Hall Div 1	30KLL11AA002	30UFA29045	M	H	SI	S 1E EMC
Sup Iso Dmpr, Emer Airlock Div 1	30KLL11AA003	30UFA29005	M	H	SI	S 1E EMC
Sup Iso Dmpr, Equip Hatch Div 4	30KLL14AA001	30UFA29090	M	H	SI	S 1E EMC
Sup Iso Dmpr, Fuel Hdlg Hall Div 4	30KLL14AA002	30UFA29015~~90~~	M	H	SI	S 1E EMC
Sup Iso Dmpr, Emer Airlock Div 4	30KLL14AA003	30UFA29004	M	H	SI	S 1E EMC
Exh Iso Dmpr, Equip Hatch ~~KLL21 Louver Damper~~	30KLL21AA001	30UFA29090	M	H	SI	S 1E EMC
Exh Iso Dmpr, Emer Airlock ~~KLL24 Louver Damper~~	30KLL21AA003	30UFA29005	M	H	SI	S 1E EMC
Exh Iso Dmpr, Equip Hatch Div 4	30KLL24AA001	30UFA29090	M	H	SI	S 1E EMC
Exh Iso Dmpr, Fuel Hdlg Hall Div 4	30KLL24AA002	30UFA29045	M	H	SI	S 1E EMC
Exh Iso Dmpr, Emer Airlock ~~KLL21 Louver Damper 2~~	30KLL24AA003	30UFA29004	M	H	SI	S 1E EMC
Sup Iso/Cntr Dmpr (KLE to KLL - Cell 5)	30KLL31AA049	30UFA24045	M	H	SI	S 1E EMC

09.04.02-1

DRAFT

09.04.02-1

Table 3.11-1—List of Environmentally Qualified Electrical/I&C Equipment
Sheet 85 of 98

Name Tag (Equipment Description)	Tag Number	Local Area KKS ID (Room Location)	EQ Environment (Note 1)	Radiation Environment Zone (Note 2)	EQ Designated Function (Note 3)	Safety Class (Note 4)
Sup Iso Dmpr (KLE to KLL - Cell 5)	30KLL34AA090	30UFA24045	M	H	SI	S 1E EMC
Exh Iso Dmpr (KLL - Cell 5 to KLE)	30KLL41AA101	30UFA24056	M	H	SI	S 1E EMC
Exh Iso Dmpr (KLL - Cell 5 to KLE)	30KLL44AA101	30UFA24056	M	H	SI	S 1E EMC
Sup Iso/Cntr Dmpr (KLE to KLL - Cell 4)	30KLL34AA065	30UFA24095	M	H	SI	S 1E EMC
Sup Iso Dmpr (KLE to KLL - Cell 4)	30KLL31AA090	30UFA24095	M	H	SI	S 1E EMC
Exh Iso Dmpr (KLL - Cell 4 to KLE)	30KLL41AA100	30UFA29054	M	H	SI	S 1E EMC
Exh Iso Dmpr (KLL - Cell 4 to KLE)	30KLL44AA100	30UFA29054	M	H	SI	S 1E EMC
Sup Iso/Cntr Dmpr, Fuel Pool Flr	30KLL11AA010	30UFA29015	M	H	SII	NS-AQ EMC
Exh Iso Dmpr, Fuel Pool Flr to KLC	30KLL21AA002	30UFA29015	M	H	SI	S 1E EMC
Exh Iso Dmpr (KLL - Cell 4 to KLE)	30KLL21AA004	30UFA29015	M	H	SI	S 1E EMC
Exh Iso Dmpr (KLL - Cell 4 to KLE)	30KLL24AA004	30UFA29015	M	H	SI	S 1E EMC
~~1~~ Air Heater, EBS Pump Room ~~Boron RM~~	30KLL61AH001	30UFA01038	M	H	SI	S 1E EMC
~~2~~ Air Heater, EBS Pump Room ~~Boron RM~~	30KLL61AH002	30UFA01038~~5~~	M	H	SI	S 1E EMC
~~3~~ Air Heater, EBS Pipe Chase ~~Boron RM~~	30KLL61AH003	30UFA06039~~1035~~	M	H	SI	S 1E EMC
~~4~~ Air Heater, EBS Pipe Chase ~~Boron RM~~	30KLL61AH004	30UFA06039~~3006~~	M	H	SI	S 1E EMC
~~5 Air Heater, Boron RM~~	~~30KLL61AH005~~	~~30UFA03006~~	~~M~~	~~H~~	~~SI~~	~~S 1E EMC~~
~~6 Air Heater, Boron RM~~	~~30KLL61AH008~~	~~30UFA06035~~	~~M~~	~~H~~	~~SI~~	~~S 1E EMC~~
~~7 Air Heater, Boron RM~~	~~30KLL61AH009~~	~~30UFA06035~~	~~M~~	~~H~~	~~SI~~	~~S 1E EMC~~
~~8~~ Air Heater, Loading Hall Duct ~~Boron RM~~	30KLL61AH010	30UFA100150~~6036~~	M	H	SII	~~S~~ NS-AQ 1E EMC
~~9~~ Air Heater, Pipe Pene Duct ~~Boron RM~~	30KLL61AH011	30UFA150450~~6036~~	M	H	SII	~~S~~ NS-AQ 1E EMC
~~10 Air Heater, Boron RM~~	~~30KLL61AH012~~	~~30UFA01049~~	~~M~~	~~H~~	~~SI~~	~~S 1E EMC~~
~~11 Air Heater, Boron RM~~	~~30KLL61AH013~~	~~30UFA01049~~	~~M~~	~~H~~	~~SI~~	~~S 1E EMC~~
~~12 Air Heater, Boron RM~~	~~30KLL61AH014~~	~~30UFA06045~~	~~M~~	~~H~~	~~SI~~	~~S 1E EMC~~
~~13 Air Heater, Boron RM~~	~~30KLL61AH015~~	~~30UFA06045~~	~~M~~	~~H~~	~~SI~~	~~S 1E EMC~~
~~14 Air Heater, Boron RM~~	~~30KLL61AH018~~	~~30UFA10039~~	~~M~~	~~H~~	~~SI~~	~~S 1E EMC~~
~~15 Air Heater, Boron RM~~	~~30KLL61AH019~~	~~30UFA10045~~	~~M~~	~~H~~	~~SI~~	~~S 1E EMC~~
~~16 Air Heater, Boron RM~~	~~30KLL61AH020~~	~~30UFA10045~~	~~M~~	~~H~~	~~SI~~	~~S 1E EMC~~
~~17 Air Heater, Boron RM~~	~~30KLL61AH023~~	~~30UFA13071~~	~~M~~	~~H~~	~~SI~~	~~S 1E EMC~~
~~18 Air Heater, Boron RM~~	~~30KLL61AH024~~	~~30UFA13071~~	~~M~~	~~H~~	~~SI~~	~~S 1E EMC~~
~~19 Air Heater, Boron RM~~	~~30KLL61AH025~~	~~30UFA03006~~	~~M~~	~~H~~	~~SI~~	~~S 1E EMC~~
~~20 Air Heater, Boron RM~~	~~30KLL61AH026~~	~~30UFA15045~~	~~M~~	~~H~~	~~SI~~	~~S 1E EMC~~
~~21 Air Heater, Boron RM~~	~~30KLL61AH027~~	~~30UFA15045~~	~~M~~	~~H~~	~~SI~~	~~S 1E EMC~~
~~22 Air Heater, Boron RM~~	~~30KLL61AH028~~	~~30UFA15045~~	~~M~~	~~H~~	~~SI~~	~~S 1E EMC~~
~~23 Air Heater, Boron RM~~	~~30KLL61AH029~~	~~30UFA18045~~	~~M~~	~~H~~	~~SI~~	~~S 1E EMC~~
~~24 Air Heater, Boron RM~~	~~30KLL61AH030~~	~~30UFA18045~~	~~M~~	~~H~~	~~SI~~	~~S 1E EMC~~
~~25 Air Heater, Boron RM~~	~~30KLL61AH032~~	~~30UFA21045~~	~~M~~	~~H~~	~~SI~~	~~S 1E EMC~~
~~26 Air Heater, Boron RM~~	~~30KLL61AH033~~	~~30UFA21045~~	~~M~~	~~H~~	~~SI~~	~~S 1E EMC~~
~~27 Air Heater, Boron RM~~	~~30KLL61AH035~~	~~30UFA18045~~	~~M~~	~~H~~	~~SI~~	~~S 1E EMC~~
~~28 Air Heater, Boron RM~~	~~30KLL61AH039~~	~~30UFA24071~~	~~M~~	~~H~~	~~SI~~	~~S 1E EMC~~
~~29 Air Heater, Boron RM~~	~~30KLL61AH042~~	~~30UFA01033~~	~~M~~	~~H~~	~~SI~~	~~S 1E EMC~~
~~30 Air Heater, Boron RM~~	~~30KLL61AH043~~	~~30UFA01033~~	~~M~~	~~H~~	~~SI~~	~~S 1E EMC~~
~~31 Air Heater, Boron RM~~	~~30KLL61AH044~~	~~30UFA01033~~	~~M~~	~~H~~	~~SI~~	~~S 1E EMC~~
~~32 Air Heater, Boron RM~~	~~30KLL61AH048~~	~~30UFA24071~~	~~M~~	~~H~~	~~SI~~	~~S 1E EMC~~
~~33 Air Heater, Boron RM~~	~~30KLL61AH049~~	~~30UFA05004~~	~~M~~	~~H~~	~~SI~~	~~S 1E EMC~~
~~34 Air Heater, Boron RM~~	~~30KLL61AH050~~	~~30UFA05004~~	~~M~~	~~H~~	~~SI~~	~~S 1E EMC~~
~~35 Air Heater, Boron RM~~	~~30KLL61AH053~~	~~30UFA01038~~	~~M~~	~~H~~	~~SI~~	~~S 1E EMC~~
~~36 Air Heater, Boron RM~~	~~30KLL61AH055~~	~~30UFA10039~~	~~M~~	~~H~~	~~SI~~	~~S 1E EMC~~
~~37 Air Heater, Boron RM~~	~~30KLL61AH056~~	~~30UFA06045~~	~~M~~	~~H~~	~~SI~~	~~S 1E EMC~~

DRAFT

09.04.02-1

Table 3.11-1—List of Environmentally Qualified Electrical/I&C Equipment
Sheet 86 of 98

Name Tag (Equipment Description)	Tag Number	Local Area KKS ID (Room Location)	EQ Environment (Note 1)	Radiation Environment Zone (Note 2)	EQ Designated Function (Note 3)	Safety Class (Note 4)
~~38 Air Heater, Boron RM~~	~~30KLL61AH058~~	~~30UFA10045~~	~~M~~	~~H~~	~~SI~~	~~S 1E EMC~~
~~1~~ Recirc Fan, Ex Borating Pump RM	30KLL61AN001	30UFA01038	M	H	SI	S 1E EMC
~~2~~ Recirc Fan, FP Cooling Pump RM	30KLL61AN002	30UFA01026	M	H	SI	S 1E EMC
~~3~~ Recirc Fan, FP Cooling Pump RM	30KLL61AN003	30UFA05082~~1027~~	M	H	SI	S 1E EMC
~~1~~ TEMP ROOM UFA01038	30KLL61CT001	30UFA01038	M	H	SI	S 1E EMC
~~1~~ TEMP ROOM UFA01038~~5~~	30KLL61CT002	30UFA01038~~5~~	M	H	SI	S 1E EMC
~~2~~ TEMP ROOM UFA06039~~1035~~	30KLL61CT003	30UFA06039~~1035~~	M	H	SI	S 1E EMC
~~1~~ TEMP ROOM UFA06039~~3006~~	30KLL61CT004	30UFA06039~~3006~~	M	H	SI	S 1E EMC
~~2 TEMP ROOM UFA03006~~	~~30KLL61CT005~~	~~30UFA03006~~	~~M~~	~~H~~	~~SI~~	~~S 1E EMC~~
~~1 TEMP ROOM UFA06035~~	~~30KLL61CT008~~	~~30UFA06035~~	~~M~~	~~H~~	~~SI~~	~~S 1E EMC~~
~~2 TEMP ROOM UFA06035~~	~~30KLL61CT009~~	~~30UFA06035~~	~~M~~	~~H~~	~~SI~~	~~S 1E EMC~~
~~1~~ TEMP ROOM UFA100150~~6036~~	30KLL61CT010	30UFA100150~~6036~~	M	H	SII	~~S~~ NS-AQ 1E EMC
~~2~~ TEMP ROOM UFA210450~~6036~~	30KLL61CT011	30UFA210450~~6036~~	M	H	SI	S 1E EMC
~~1TEMP ROOM UFA01049~~	~~30KLL61CT012~~	~~30UFA01049~~	~~M~~	~~H~~	~~SI~~	~~S 1E EMC~~
~~2 TEMP ROOM UFA01049~~	~~30KLL61CT013~~	~~30UFA01049~~	~~M~~	~~H~~	~~SI~~	~~S 1E EMC~~
~~1 TEMP ROOM UFA06045~~	~~30KLL61CT014~~	~~30UFA06045~~	~~M~~	~~H~~	~~SI~~	~~S 1E EMC~~
~~2 TEMP ROOM UFA06045~~	~~30KLL61CT015~~	~~30UFA06045~~	~~M~~	~~H~~	~~SI~~	~~S 1E EMC~~
~~1 TEMP ROOM UFA10039~~	~~30KLL61CT018~~	~~30UFA10039~~	~~M~~	~~H~~	~~SI~~	~~S 1E EMC~~
~~1~~ TEMP ROOM UFA290151~~0045~~	30KLL61CT0201~~9~~	30UFA290151~~0045~~	M	H	SI	S 1E EMC
~~2 TEMP ROOM UFA10045~~	~~30KLL61CT020~~	~~30UFA10045~~	~~M~~	~~H~~	~~SI~~	~~S 1E EMC~~
~~1 TEMP ROOM UFA13071~~	~~30KLL61CT023~~	~~30UFA13071~~	~~M~~	~~H~~	~~SI~~	~~S 1E EMC~~
~~2 TEMP ROOM UFA13071~~	~~30KLL61CT024~~	~~30UFA13071~~	~~M~~	~~H~~	~~SI~~	~~S 1E EMC~~
~~TEMP ROOM UFA03006~~	~~30KLL61CT025~~	~~30UFA03006~~	~~M~~	~~H~~	~~SI~~	~~S 1E EMC~~
~~1 TEMP ROOM UFA15045~~	~~30KLL61CT026~~	~~30UFA15045~~	~~M~~	~~H~~	~~SI~~	~~S 1E EMC~~
~~2 TEMP ROOM UFA15045~~	~~30KLL61CT027~~	~~30UFA15045~~	~~M~~	~~H~~	~~SI~~	~~S 1E EMC~~
~~3 TEMP ROOM UFA15045~~	~~30KLL61CT028~~	~~30UFA15045~~	~~M~~	~~H~~	~~SI~~	~~S 1E EMC~~
~~4 TEMP ROOM UFA18045~~	~~30KLL61CT029~~	~~30UFA18045~~	~~M~~	~~H~~	~~SI~~	~~S 1E EMC~~
~~5 TEMP ROOM UFA18045~~	~~30KLL61CT030~~	~~30UFA18045~~	~~M~~	~~H~~	~~SI~~	~~S 1E EMC~~
~~1 TEMP ROOM UFA21045~~	~~30KLL61CT032~~	~~30UFA21045~~	~~M~~	~~H~~	~~SI~~	~~S 1E EMC~~
~~2 TEMP ROOM UFA21045~~	~~30KLL61CT033~~	~~30UFA21045~~	~~M~~	~~H~~	~~SI~~	~~S 1E EMC~~
~~6 TEMP ROOM UFA18045~~	~~30KLL61CT035~~	~~30UFA18045~~	~~M~~	~~H~~	~~SI~~	~~S 1E EMC~~
~~1 TEMP ROOM UFA24071~~	~~30KLL61CT039~~	~~30UFA24071~~	~~M~~	~~H~~	~~SI~~	~~S 1E EMC~~
~~1 TEMP ROOM UFA01033~~	~~30KLL61CT042~~	~~30UFA01033~~	~~M~~	~~H~~	~~SI~~	~~S 1E EMC~~
~~2 TEMP ROOM UFA01033~~	~~30KLL61CT043~~	~~30UFA01033~~	~~M~~	~~H~~	~~SI~~	~~S 1E EMC~~
~~3 TEMP ROOM UFA01033~~	~~30KLL61CT044~~	~~30UFA01033~~	~~M~~	~~H~~	~~SI~~	~~S 1E EMC~~
~~2 TEMP ROOM UFA24071~~	~~30KLL61CT048~~	~~30UFA24071~~	~~M~~	~~H~~	~~SI~~	~~S 1E EMC~~
~~1 TEMP ROOM UFA05004~~	~~30KLL61CT049~~	~~30UFA05004~~	~~M~~	~~H~~	~~SI~~	~~S 1E EMC~~
~~2 TEMP ROOM UFA05004~~	~~30KLL61CT050~~	~~30UFA05004~~	~~M~~	~~H~~	~~SI~~	~~S 1E EMC~~
~~2 TEMP ROOM UFA01038~~	~~30KLL61CT053~~	~~30UFA01038~~	~~M~~	~~H~~	~~SI~~	~~S 1E EMC~~
~~2 TEMP ROOM UFA10039~~	~~30KLL61CT055~~	~~30UFA10039~~	~~M~~	~~H~~	~~SI~~	~~S 1E EMC~~
~~TEMP ROOM UFA06045~~	~~30KLL61CT056~~	~~30UFA06045~~	~~M~~	~~H~~	~~SI~~	~~S 1E EMC~~
~~TEMP ROOM UFA10045~~	~~30KLL61CT058~~	~~30UFA10045~~	~~M~~	~~H~~	~~SI~~	~~S 1E EMC~~
~~TEMP ROOM UFA01038~~	~~30KLL61CT101~~	~~30UFA01038~~	~~M~~	~~H~~	~~SI~~	~~S 1E EMC~~
TEMP ROOM UFA01026~~1035~~	30KLL61CT102	30UFA01026~~1035~~	M	H	SI	S 1E EMC
TEMP ROOM UFA05082~~3006~~	30KLL61CT103~~4~~	30UFA05082~~3006~~	M	H	SI	S 1E EMC
TEMP ROOM UFA290150~~6035~~	30KLL61CT140~~8~~	30UFA290150~~6035~~	M	H	SI	S 1E EMC
TEMP ROOM UFA100150~~6036~~	30KLL61CT110	30UFA100150~~6036~~	M	H	SII	~~S~~ NS-AQ 1E EMC
TEMP ROOM UFA150450~~1049~~	30KLL61CT111~~2~~	30UFA150450~~1049~~	M	H	SII	~~S~~ NS-AQ 1E EMC

DRAFT

09.04.02-1

Table 3.11-1—List of Environmentally Qualified Electrical/I&C Equipment
Sheet 87 of 98

Name Tag (Equipment Description)	Tag Number	Local Area KKS ID (Room Location)	EQ Environment (Note 1)	Radiation Environment Zone (Note 2)	EQ Designated Function (Note 3)	Safety Class (Note 4)
~~TEMP ROOM UFA06045~~	~~30KLL61CT114~~	~~30UFA06045~~	~~M~~	~~H~~	~~SI~~	~~S 1E EMC~~
~~TEMP ROOM UFA10039~~	~~30KLL61CT118~~	~~30UFA10039~~	~~M~~	~~H~~	~~SI~~	~~S 1E EMC~~
~~TEMP ROOM UFA10045~~	~~30KLL61CT119~~	~~30UFA10045~~	~~M~~	~~H~~	~~SI~~	~~S 1E EMC~~
~~TEMP ROOM UFA13071~~	~~30KLL61CT123~~	~~30UFA13071~~	~~M~~	~~H~~	~~SI~~	~~S 1E EMC~~
~~TEMP ROOM UFA15045~~	~~30KLL61CT126~~	~~30UFA15045~~	~~M~~	~~H~~	~~SI~~	~~S 1E EMC~~
~~TEMP ROOM UFA18045~~	~~30KLL61CT129~~	~~30UFA18045~~	~~M~~	~~H~~	~~SI~~	~~S 1E EMC~~
~~TEMP ROOM UFA21045~~	~~30KLL61CT132~~	~~30UFA21045~~	~~M~~	~~H~~	~~SI~~	~~S 1E EMC~~
~~TEMP ROOM UFA24071~~	~~30KLL61CT139~~	~~30UFA24071~~	~~M~~	~~H~~	~~SI~~	~~S 1E EMC~~
~~TEMP ROOM UFA01033~~	~~30KLL61CT142~~	~~30UFA01033~~	~~M~~	~~H~~	~~SI~~	~~S 1E EMC~~
~~TEMP ROOM UFA05004~~	~~30KLL61CT149~~	~~30UFA05004~~	~~M~~	~~H~~	~~SI~~	~~S 1E EMC~~
~~TEMP ROOM UFA01026~~	~~30KLL61CT198~~	~~30UFA01026~~	~~M~~	~~H~~	~~SI~~	~~S 1E EMC~~
~~TEMP ROOM UFA01027~~	~~30KLL61CT199~~	~~30UFA01027~~	~~M~~	~~H~~	~~SI~~	~~S 1E EMC~~
~~39~~ Air Heater, EBS Pump Room ~~Boron RM~~	30KLL64AH001	30UFA01088~~2~~	M	H	SI	S 1E EMC
~~40~~ Air Heater, EBS Pump Room ~~Boron RM~~	30KLL64AH002	30UFA01088~~2~~	M	H	SI	S 1E EMC
~~41~~ Air Heater, EBS Pipe Chase ~~Boron RM~~	30KLL64AH003	30UFA06087~~1088~~	M	H	SI	S 1E EMC
~~42~~ Air Heater, EBS Pipe Chase ~~Boron RM~~	30KLL64AH004	30UFA06087~~10071~~	M	H	SI	S 1E EMC
~~43 Air Heater, Boron RM~~	~~30KLL64AH005~~	~~30UFA10071~~	~~M~~	~~H~~	~~SI~~	~~S 1E EMC~~
~~44 Air Heater, Boron RM~~	~~30KLL64AH006~~	~~30UFA03057~~	~~M~~	~~H~~	~~SI~~	~~S 1E EMC~~
~~45 Air Heater, Boron RM~~	~~30KLL64AH007~~	~~30UFA03057~~	~~M~~	~~H~~	~~SI~~	~~S 1E EMC~~
~~46 Air Heater, Boron RM~~	~~30KLL64AH008~~	~~30UFA03057~~	~~M~~	~~H~~	~~SI~~	~~S 1E EMC~~
~~47 Air Heater, Boron RM~~	~~30KLL64AH009~~	~~30UFA03057~~	~~M~~	~~H~~	~~SI~~	~~S 1E EMC~~
~~48 Air Heater, Boron RM~~	~~30KLL64AH010~~	~~30UFA03057~~	~~M~~	~~H~~	~~SI~~	~~S 1E EMC~~
~~49 Air Heater, Boron RM~~	~~30KLL64AH011~~	~~30UFA05076~~	~~M~~	~~H~~	~~SI~~	~~S 1E EMC~~
~~50~~ Air Heater, Corridor Duct ~~Boron RM~~	30KLL64AH012	30UFA06057~~5076~~	M	H	SII	~~S~~ NS-AQ ~~1E~~ EMC
~~51~~ Air Heater, Corridor Duct ~~Boron RM~~	30KLL64AH013	30UFA06056~~82~~	M	H	SII	~~S~~ NS-AQ ~~1E~~ EMC
~~52~~ Air Heater, Corridor Duct ~~Boron RM~~	30KLL64AH014	30UFA24056~~06084~~	M	H	SII	~~S~~ NS-AQ ~~1E~~ EMC
~~53 Air Heater, Boron RM~~	~~30KLL64AH015~~	~~30UFA06085~~	~~M~~	~~H~~	~~SI~~	~~S 1E EMC~~
~~54 Air Heater, Boron RM~~	~~30KLL64AH016~~	~~30UFA06086~~	~~M~~	~~H~~	~~SI~~	~~S 1E EMC~~
~~55 Air Heater, Boron RM~~	~~30KLL64AH017~~	~~30UFA06095~~	~~M~~	~~H~~	~~SI~~	~~S 1E EMC~~
~~56 Air Heater, Boron RM~~	~~30KLL64AH018~~	~~30UFA06095~~	~~M~~	~~H~~	~~SI~~	~~S 1E EMC~~
~~57 Air Heater, Boron RM~~	~~30KLL64AH019~~	~~30UFA10070~~	~~M~~	~~H~~	~~SI~~	~~S 1E EMC~~
~~58 Air Heater, Boron RM~~	~~30KLL64AH020~~	~~30UFA10082~~	~~M~~	~~H~~	~~SI~~	~~S 1E EMC~~
~~59 Air Heater, Boron RM~~	~~30KLL64AH021~~	~~30UFA10089~~	~~M~~	~~H~~	~~SI~~	~~S 1E EMC~~
~~60 Air Heater, Boron RM~~	~~30KLL64AH022~~	~~30UFA10095~~	~~M~~	~~H~~	~~SI~~	~~S 1E EMC~~
~~61 Air Heater, Boron RM~~	~~30KLL64AH023~~	~~30UFA10095~~	~~M~~	~~H~~	~~SI~~	~~S 1E EMC~~
~~62 Air Heater, Boron RM~~	~~30KLL64AH024~~	~~30UFA13025~~	~~M~~	~~H~~	~~SI~~	~~S 1E EMC~~
~~63 Air Heater, Boron RM~~	~~30KLL64AH025~~	~~30UFA13025~~	~~M~~	~~H~~	~~SI~~	~~S 1E EMC~~
~~64 Air Heater, Boron RM~~	~~30KLL64AH026~~	~~30UFA13025~~	~~M~~	~~H~~	~~SI~~	~~S 1E EMC~~
~~65 Air Heater, Boron RM~~	~~30KLL64AH027~~	~~30UFA13025~~	~~M~~	~~H~~	~~SI~~	~~S 1E EMC~~
~~66 Air Heater, Boron RM~~	~~30KLL64AH028~~	~~30UFA13070~~	~~M~~	~~H~~	~~SI~~	~~S 1E EMC~~
~~67 Air Heater, Boron RM~~	~~30KLL64AH029~~	~~30UFA13070~~	~~M~~	~~H~~	~~SI~~	~~S 1E EMC~~
~~68 Air Heater, Boron RM~~	~~30KLL64AH030~~	~~30UFA17025~~	~~M~~	~~H~~	~~SI~~	~~S 1E EMC~~
~~69 Air Heater, Boron RM~~	~~30KLL64AH031~~	~~30UFA17025~~	~~M~~	~~H~~	~~SI~~	~~S 1E EMC~~
~~70 Air Heater, Boron RM~~	~~30KLL64AH032~~	~~30UFA17057~~	~~M~~	~~H~~	~~SI~~	~~S 1E EMC~~
~~71 Air Heater, Boron RM~~	~~30KLL64AH033~~	~~30UFA17057~~	~~M~~	~~H~~	~~SI~~	~~S 1E EMC~~
~~72 Air Heater, Boron RM~~	~~30KLL64AH034~~	~~30UFA17056~~	~~M~~	~~H~~	~~SI~~	~~S 1E EMC~~
~~73 Air Heater, Boron RM~~	~~30KLL64AH035~~	~~30UFA17056~~	~~M~~	~~H~~	~~SI~~	~~S 1E EMC~~
~~74 Air Heater, Boron RM~~	~~30KLL64AH036~~	~~30UFA17072~~	~~M~~	~~H~~	~~SI~~	~~S 1E EMC~~

DRAFT

09.04.02-1

Table 3.11-1—List of Environmentally Qualified Electrical/I&C Equipment
Sheet 88 of 98

Name Tag (Equipment Description)	Tag Number	Local Area KKS ID (Room Location)	EQ Environment (Note 1)	Radiation Environment Zone (Note 2)	EQ Designated Function (Note 3)	Safety Class (Note 4)		
~~75 Air Heater, Boron RM~~	~~30KLL64AH037~~	~~30UFA17072~~	~~M~~	~~H~~	~~SI~~	~~S~~	~~1E~~	~~EMC~~
~~76 Air Heater, Boron RM~~	~~30KLL64AH038~~	~~30UFA21057~~	~~M~~	~~H~~	~~SI~~	~~S~~	~~1E~~	~~EMC~~
~~77 Air Heater, Boron RM~~	~~30KLL64AH039~~	~~30UFA21057~~	~~M~~	~~H~~	~~SI~~	~~S~~	~~1E~~	~~EMC~~
~~78 Air Heater, Boron RM~~	~~30KLL64AH040~~	~~30UFA21057~~	~~M~~	~~H~~	~~SI~~	~~S~~	~~1E~~	~~EMC~~
~~79 Air Heater, Boron RM~~	~~30KLL64AH042~~	~~30UFA21072~~	~~M~~	~~H~~	~~SI~~	~~S~~	~~1E~~	~~EMC~~
~~80 Air Heater, Boron RM~~	~~30KLL64AH043~~	~~30UFA21072~~	~~M~~	~~H~~	~~SI~~	~~S~~	~~1E~~	~~EMC~~
~~81 Air Heater, Boron RM~~	~~30KLL64AH044~~	~~30UFA21095~~	~~M~~	~~H~~	~~SI~~	~~S~~	~~1E~~	~~EMC~~
~~82 Air Heater, Boron RM~~	~~30KLL64AH045~~	~~30UFA21095~~	~~M~~	~~H~~	~~SI~~	~~S~~	~~1E~~	~~EMC~~
~~83 Air Heater, Boron RM~~	~~30KLL64AH046~~	~~30UFA21095~~	~~M~~	~~H~~	~~SI~~	~~S~~	~~1E~~	~~EMC~~
~~84 Air Heater, Boron RM~~	~~30KLL64AH047~~	~~30UFA17025~~	~~M~~	~~H~~	~~SI~~	~~S~~	~~1E~~	~~EMC~~
~~85 Air Heater, Boron RM~~	~~30KLL64AH048~~	~~30UFA24070~~	~~M~~	~~H~~	~~SI~~	~~S~~	~~1E~~	~~EMC~~
~~86 Air Heater, Boron RM~~	~~30KLL64AH049~~	~~30UFA24070~~	~~M~~	~~H~~	~~SI~~	~~S~~	~~1E~~	~~EMC~~
~~87 Air Heater, Boron RM~~	~~30KLL64AH050~~	~~30UFA24072~~	~~M~~	~~H~~	~~SI~~	~~S~~	~~1E~~	~~EMC~~
~~88 Air Heater, Boron RM~~	~~30KLL64AH051~~	~~30UFA24072~~	~~M~~	~~H~~	~~SI~~	~~S~~	~~1E~~	~~EMC~~
~~89 Air Heater, Boron RM~~	~~30KLL64AH052~~	~~30UFA24080~~	~~M~~	~~H~~	~~SI~~	~~S~~	~~1E~~	~~EMC~~
~~90 Air Heater, Boron RM~~	~~30KLL64AH053~~	~~30UFA24080~~	~~M~~	~~H~~	~~SI~~	~~S~~	~~1E~~	~~EMC~~
~~91 Air Heater, Boron RM~~	~~30KLL64AH054~~	~~30UFA24095~~	~~M~~	~~H~~	~~SI~~	~~S~~	~~1E~~	~~EMC~~
~~92 Air Heater, Boron RM~~	~~30KLL64AH055~~	~~30UFA24095~~	~~M~~	~~H~~	~~SI~~	~~S~~	~~1E~~	~~EMC~~
~~93 Air Heater, Boron RM~~	~~30KLL64AH059~~	~~30UFA10070~~	~~M~~	~~H~~	~~SI~~	~~S~~	~~1E~~	~~EMC~~
~~94 Air Heater, Boron RM~~	~~30KLL64AH062~~	~~30UFA01083~~	~~M~~	~~H~~	~~SI~~	~~S~~	~~1E~~	~~EMC~~
~~95 Air Heater, Boron RM~~	~~30KLL64AH063~~	~~30UFA01083~~	~~M~~	~~H~~	~~SI~~	~~S~~	~~1E~~	~~EMC~~
~~96 Air Heater, Boron RM~~	~~30KLL64AH065~~	~~30UFA01085~~	~~M~~	~~H~~	~~SI~~	~~S~~	~~1E~~	~~EMC~~
~~97 Air Heater, Boron RM~~	~~30KLL64AH066~~	~~30UFA01085~~	~~M~~	~~H~~	~~SI~~	~~S~~	~~1E~~	~~EMC~~
~~98 Air Heater, Boron RM~~	~~30KLL64AH069~~	~~30UFA05054~~	~~M~~	~~H~~	~~SI~~	~~S~~	~~1E~~	~~EMC~~
~~99 Air Heater, Boron RM~~	~~30KLL64AH070~~	~~30UFA05054~~	~~M~~	~~H~~	~~SI~~	~~S~~	~~1E~~	~~EMC~~
~~100 Air Heater, Boron RM~~	~~30KLL64AH071~~	~~30UFA05076~~	~~M~~	~~H~~	~~SI~~	~~S~~	~~1E~~	~~EMC~~
~~101 Air Heater, Boron RM~~	~~30KLL64AH077~~	~~30UFA17025~~	~~M~~	~~H~~	~~SI~~	~~S~~	~~1E~~	~~EMC~~
~~102 Air Heater, Boron RM~~	~~30KLL64AH078~~	~~30UFA24081~~	~~M~~	~~H~~	~~SI~~	~~S~~	~~1E~~	~~EMC~~
~~103 Air Heater, Boron RM~~	~~30KLL64AH079~~	~~30UFA24081~~	~~M~~	~~H~~	~~SI~~	~~S~~	~~1E~~	~~EMC~~
~~104 Air Heater, Boron RM~~	~~30KLL64AH080~~	~~30UFA24095~~	~~M~~	~~H~~	~~SI~~	~~S~~	~~1E~~	~~EMC~~
~~105 Air Heater, Boron RM~~	~~30KLL64AH084~~	~~30UFA06082~~	~~M~~	~~H~~	~~SI~~	~~S~~	~~1E~~	~~EMC~~
~~106 Air Heater, Boron RM~~	~~30KLL64AH085~~	~~30UFA10082~~	~~M~~	~~H~~	~~SI~~	~~S~~	~~1E~~	~~EMC~~
~~107 Air Heater, Boron RM~~	~~30KLL64AH086~~	~~30UFA01088~~	~~M~~	~~H~~	~~SI~~	~~S~~	~~1E~~	~~EMC~~
~~108 Air Heater, Boron RM~~	~~30KLL64AH087~~	~~30UFA03057~~	~~M~~	~~H~~	~~SI~~	~~S~~	~~1E~~	~~EMC~~
~~109 Air Heater, Boron RM~~	~~30KLL64AH092~~	~~30UFA06084~~	~~M~~	~~H~~	~~SI~~	~~S~~	~~1E~~	~~EMC~~
~~110 Air Heater, Boron RM~~	~~30KLL64AH093~~	~~30UFA06085~~	~~M~~	~~H~~	~~SI~~	~~S~~	~~1E~~	~~EMC~~
~~111 Air Heater, Boron RM~~	~~30KLL64AH094~~	~~30UFA06086~~	~~M~~	~~H~~	~~SI~~	~~S~~	~~1E~~	~~EMC~~
~~112 Air Heater, Boron RM~~	~~30KLL64AH095~~	~~30UFA06095~~	~~M~~	~~H~~	~~SI~~	~~S~~	~~1E~~	~~EMC~~
~~114 Air Heater, Boron RM~~	~~30KLL64AH097~~	~~30UFA10089~~	~~M~~	~~H~~	~~SI~~	~~S~~	~~1E~~	~~EMC~~
~~115 Air Heater, Boron RM~~	~~30KLL64AH098~~	~~30UFA10095~~	~~M~~	~~H~~	~~SI~~	~~S~~	~~1E~~	~~EMC~~
~~4~~ Recirc Fan, Ex Borating Pump RM	30KLL64AN001	30UFA01088	M	H	SI	S	1E	EMC
~~5~~ Recirc Fan, FP Cooling Pump RM	30KLL64AN002	30UFA01076	M	H	SI	S	1E	EMC
~~6~~ Recirc Fan, FP Cooling Pump RM	30KLL64AN003	30UFA01077	M	H	SI	S	1E	EMC
~~1~~ TEMP ROOM UFA01088~~2~~	30KLL64CT001	30UFA01088~~2~~	M	H	SI	S	1E	EMC
~~2~~ TEMP ROOM UFA01088~~2~~	30KLL64CT002	30UFA01088~~2~~	M	H	SI	S	1E	EMC
TEMP ROOM UFA06087~~1088~~	30KLL64CT003	30UFA06087~~1088~~	M	H	SI	S	1E	EMC
~~1~~ TEMP ROOM UFA06087~~10071~~	30KLL64CT004	30UFA06087~~10071~~	M	H	SI	S	1E	EMC
~~2 TEMP ROOM UFA10071~~	~~30KLL64CT005~~	~~30UFA10071~~	~~M~~	~~H~~	~~SI~~	~~S~~	~~1E~~	~~EMC~~

DRAFT

09.04.02-1

Table 3.11-1—List of Environmentally Qualified Electrical/I&C Equipment
Sheet 89 of 98

Name Tag (Equipment Description)	Tag Number	Local Area KKS ID (Room Location)	EQ Environment (Note 1)	Radiation Environment Zone (Note 2)	EQ Designated Function (Note 3)	Safety Class (Note 4)
~~1 TEMP ROOM UFA03057~~	~~30KLL64CT006~~	~~30UFA03057~~	~~M~~	~~H~~	~~SI~~	~~S 1E EMC~~
~~2 TEMP ROOM UFA03057~~	~~30KLL64CT007~~	~~30UFA03057~~	~~M~~	~~H~~	~~SI~~	~~S 1E EMC~~
~~3 TEMP ROOM UFA03057~~	~~30KLL64CT008~~	~~30UFA03057~~	~~M~~	~~H~~	~~SI~~	~~S 1E EMC~~
~~4 TEMP ROOM UFA03057~~	~~30KLL64CT009~~	~~30UFA03057~~	~~M~~	~~H~~	~~SI~~	~~S 1E EMC~~
~~5~~ TEMP ROOM UFA240720~~3057~~	30KLL64CT010	30UFA240720~~3057~~	M	H	SI	S 1E EMC
~~1~~ TEMP ROOM UFA05076	30KLL64CT011	30UFA05076	M	H	SI	S 1E EMC
~~2~~ TEMP ROOM UFA0~~60565076~~	30KLL64CT012	30UFA0~~60565076~~	M	H	SII	~~S~~ NS-AQ ~~1E~~ EMC
TEMP ROOM UFA06056~~82~~	30KLL64CT013	30UFA06056~~82~~	M	H	SII	~~S~~ NS-AQ ~~1E~~ EMC
TEMP ROOM UFA100710~~6082~~	30KLL64CT014~~3~~	30UFA100710~~6082~~	M	H	SI	S 1E EMC
~~TEMP ROOM UFA06084~~	~~30KLL64CT014~~	~~30UFA06084~~	~~M~~	~~H~~	~~SI~~	~~S 1E EMC~~
~~TEMP ROOM UFA06084~~	~~30KLL64CT014~~	~~30UFA06084~~	~~M~~	~~H~~	~~SI~~	~~S 1E EMC~~
TEMP ROOM UFA130700~~6085~~	30KLL64CT015	30UFA130700~~6085~~	M	H	SI	S 1E EMC
~~TEMP ROOM UFA06085~~	~~30KLL64CT015~~	~~30UFA06085~~	~~M~~	~~H~~	~~SI~~	~~S 1E EMC~~
TEMP ROOM UFA240700~~6086~~	30KLL64CT016	30UFA240700~~6086~~	M	H	SI	S 1E EMC
~~TEMP ROOM UFA06086~~	~~30KLL64CT016~~	~~30UFA06086~~	~~M~~	~~H~~	~~SI~~	~~S 1E EMC~~
~~1~~ TEMP ROOM UFA240560~~6095~~	30KLL64CT017	30UFA240560~~6095~~	M	H	SII	~~S~~ NS-AQ ~~1E~~ EMC
~~2 TEMP ROOM UFA06095~~	~~30KLL64CT018~~	~~30UFA06095~~	~~M~~	~~H~~	~~SI~~	~~S 1E EMC~~
~~TEMP ROOM UFA10070~~	~~30KLL64CT019~~	~~30UFA10070~~	~~M~~	~~H~~	~~SI~~	~~S 1E EMC~~
~~TEMP ROOM UFA10082~~	~~30KLL64CT020~~	~~30UFA10082~~	~~M~~	~~H~~	~~SI~~	~~S 1E EMC~~
~~TEMP ROOM UFA10089~~	~~30KLL64CT021~~	~~30UFA10089~~	~~M~~	~~H~~	~~SI~~	~~S 1E EMC~~
~~1 TEMP ROOM UFA10095~~	~~30KLL64CT022~~	~~30UFA10095~~	~~M~~	~~H~~	~~SI~~	~~S 1E EMC~~
~~2 TEMP ROOM UFA10095~~	~~30KLL64CT023~~	~~30UFA10095~~	~~M~~	~~H~~	~~SI~~	~~S 1E EMC~~
~~1~~ TEMP ROOM UFA13025	30KLL64CT024	30UFA13025	M	H	SI	S 1E EMC
~~2 TEMP ROOM UFA13025~~	~~30KLL64CT025~~	~~30UFA13025~~	~~M~~	~~H~~	~~SI~~	~~S 1E EMC~~
~~3 TEMP ROOM UFA13025~~	~~30KLL64CT026~~	~~30UFA13025~~	~~M~~	~~H~~	~~SI~~	~~S 1E EMC~~
~~4 TEMP ROOM UFA13025~~	~~30KLL64CT027~~	~~30UFA13025~~	~~M~~	~~H~~	~~SI~~	~~S 1E EMC~~
~~1 TEMP ROOM UFA13070~~	~~30KLL64CT028~~	~~30UFA13070~~	~~M~~	~~H~~	~~SI~~	~~S 1E EMC~~
~~2 TEMP ROOM UFA13070~~	~~30KLL64CT029~~	~~30UFA13070~~	~~M~~	~~H~~	~~SI~~	~~S 1E EMC~~
~~1 TEMP ROOM UFA17025~~	~~30KLL64CT030~~	~~30UFA17025~~	~~M~~	~~H~~	~~SI~~	~~S 1E EMC~~
~~2 TEMP ROOM UFA17025~~	~~30KLL64CT031~~	~~30UFA17025~~	~~M~~	~~H~~	~~SI~~	~~S 1E EMC~~
~~1 TEMP ROOM UFA17057~~	~~30KLL64CT032~~	~~30UFA17057~~	~~M~~	~~H~~	~~SI~~	~~S 1E EMC~~
~~2 TEMP ROOM UFA17057~~	~~30KLL64CT033~~	~~30UFA17057~~	~~M~~	~~H~~	~~SI~~	~~S 1E EMC~~
~~1 TEMP ROOM UFA17056~~	~~30KLL64CT034~~	~~30UFA17056~~	~~M~~	~~H~~	~~SI~~	~~S 1E EMC~~
~~2 TEMP ROOM UFA17056~~	~~30KLL64CT035~~	~~30UFA17056~~	~~M~~	~~H~~	~~SI~~	~~S 1E EMC~~
~~1 TEMP ROOM UFA17072~~	~~30KLL64CT036~~	~~30UFA17072~~	~~M~~	~~H~~	~~SI~~	~~S 1E EMC~~
~~2 TEMP ROOM UFA17072~~	~~30KLL64CT037~~	~~30UFA17072~~	~~M~~	~~H~~	~~SI~~	~~S 1E EMC~~
~~1 TEMP ROOM UFA21057~~	~~30KLL64CT038~~	~~30UFA21057~~	~~M~~	~~H~~	~~SI~~	~~S 1E EMC~~
~~2 TEMP ROOM UFA21057~~	~~30KLL64CT039~~	~~30UFA21057~~	~~M~~	~~H~~	~~SI~~	~~S 1E EMC~~
~~3 TEMP ROOM UFA21057~~	~~30KLL64CT040~~	~~30UFA21057~~	~~M~~	~~H~~	~~SI~~	~~S 1E EMC~~
~~1 TEMP ROOM UFA21072~~	~~30KLL64CT042~~	~~30UFA21072~~	~~M~~	~~H~~	~~SI~~	~~S 1E EMC~~
~~2 TEMP ROOM UFA21072~~	~~30KLL64CT043~~	~~30UFA21072~~	~~M~~	~~H~~	~~SI~~	~~S 1E EMC~~
~~1 TEMP ROOM UFA21095~~	~~30KLL64CT044~~	~~30UFA21095~~	~~M~~	~~H~~	~~SI~~	~~S 1E EMC~~
~~2 TEMP ROOM UFA21095~~	~~30KLL64CT045~~	~~30UFA21095~~	~~M~~	~~H~~	~~SI~~	~~S 1E EMC~~
~~3 TEMP ROOM UFA21095~~	~~30KLL64CT046~~	~~30UFA21095~~	~~M~~	~~H~~	~~SI~~	~~S 1E EMC~~
~~1 TEMP ROOM UFA24070~~	~~30KLL64CT048~~	~~30UFA24070~~	~~M~~	~~H~~	~~SI~~	~~S 1E EMC~~
~~2 TEMP ROOM UFA24070~~	~~30KLL64CT049~~	~~30UFA24070~~	~~M~~	~~H~~	~~SI~~	~~S 1E EMC~~
~~1 TEMP ROOM UFA24072~~	~~30KLL64CT050~~	~~30UFA24072~~	~~M~~	~~H~~	~~SI~~	~~S 1E EMC~~
~~2 TEMP ROOM UFA24072~~	~~30KLL64CT051~~	~~30UFA24072~~	~~M~~	~~H~~	~~SI~~	~~S 1E EMC~~

DRAFT

09.04.02-1

Table 3.11-1—List of Environmentally Qualified Electrical/I&C Equipment
Sheet 90 of 98

Name Tag (Equipment Description)	Tag Number	Local Area KKS ID (Room Location)	EQ Environment (Note 1)	Radiation Environment Zone (Note 2)	EQ Designated Function (Note 3)	Safety Class (Note 4)		
~~1 TEMP ROOM UFA24080~~	~~30KLL64CT052~~	~~30UFA24080~~	~~M~~	~~H~~	~~SI~~	~~S~~	~~1E~~	~~EMC~~
~~2 TEMP ROOM UFA24080~~	~~30KLL64CT053~~	~~30UFA24080~~	~~M~~	~~H~~	~~SI~~	~~S~~	~~1E~~	~~EMC~~
~~1 TEMP ROOM UFA24095~~	~~30KLL64CT054~~	~~30UFA24095~~	~~M~~	~~H~~	~~SI~~	~~S~~	~~1E~~	~~EMC~~
~~2 TEMP ROOM UFA24095~~	~~30KLL64CT055~~	~~30UFA24095~~	~~M~~	~~H~~	~~SI~~	~~S~~	~~1E~~	~~EMC~~
~~TEMP ROOM UFA10070~~	~~30KLL64CT059~~	~~30UFA10070~~	~~M~~	~~H~~	~~SI~~	~~S~~	~~1E~~	~~EMC~~
~~1 TEMP ROOM UFA01083~~	~~30KLL64CT062~~	~~30UFA01083~~	~~M~~	~~H~~	~~SI~~	~~S~~	~~1E~~	~~EMC~~
~~2 TEMP ROOM UFA01083~~	~~30KLL64CT063~~	~~30UFA01083~~	~~M~~	~~H~~	~~SI~~	~~S~~	~~1E~~	~~EMC~~
~~1 TEMP ROOM UFA01085~~	~~30KLL64CT065~~	~~30UFA01085~~	~~M~~	~~H~~	~~SI~~	~~S~~	~~1E~~	~~EMC~~
~~2 TEMP ROOM UFA01085~~	~~30KLL64CT066~~	~~30UFA01085~~	~~M~~	~~H~~	~~SI~~	~~S~~	~~1E~~	~~EMC~~
~~1 TEMP ROOM UFA05054~~	~~30KLL64CT069~~	~~30UFA05054~~	~~M~~	~~H~~	~~SI~~	~~S~~	~~1E~~	~~EMC~~
~~2 TEMP ROOM UFA05054~~	~~30KLL64CT070~~	~~30UFA05054~~	~~M~~	~~H~~	~~SI~~	~~S~~	~~1E~~	~~EMC~~
~~TEMP ROOM UFA05076~~	~~30KLL64CT071~~	~~30UFA05076~~	~~M~~	~~H~~	~~SI~~	~~S~~	~~1E~~	~~EMC~~
~~TEMP ROOM UFA17025~~	~~30KLL64CT077~~	~~30UFA17025~~	~~M~~	~~H~~	~~SI~~	~~S~~	~~1E~~	~~EMC~~
~~1 TEMP ROOM UFA24081~~	~~30KLL64CT078~~	~~30UFA24081~~	~~M~~	~~H~~	~~SI~~	~~S~~	~~1E~~	~~EMC~~
~~2 TEMP ROOM UFA24081~~	~~30KLL64CT079~~	~~30UFA24081~~	~~M~~	~~H~~	~~SI~~	~~S~~	~~1E~~	~~EMC~~
~~TEMP ROOM UFA24095~~	~~30KLL64CT080~~	~~30UFA24095~~	~~M~~	~~H~~	~~SI~~	~~S~~	~~1E~~	~~EMC~~
~~1 TEMP ROOM UFA06082~~	~~30KLL64CT084~~	~~30UFA06082~~	~~M~~	~~H~~	~~SI~~	~~S~~	~~1E~~	~~EMC~~
~~2 TEMP ROOM UFA10082~~	~~30KLL64CT085~~	~~30UFA10082~~	~~M~~	~~H~~	~~SI~~	~~S~~	~~1E~~	~~EMC~~
~~TEMP ROOM UFA01088~~	~~30KLL64CT086~~	~~30UFA01088~~	~~M~~	~~H~~	~~SI~~	~~S~~	~~1E~~	~~EMC~~
~~TEMP ROOM UFA03057~~	~~30KLL64CT087~~	~~30UFA03057~~	~~M~~	~~H~~	~~SI~~	~~S~~	~~1E~~	~~EMC~~
~~TEMP ROOM UFA06084~~	~~30KLL64CT092~~	~~30UFA06084~~	~~M~~	~~H~~	~~SI~~	~~S~~	~~1E~~	~~EMC~~
~~TEMP ROOM UFA06085~~	~~30KLL64CT093~~	~~30UFA06085~~	~~M~~	~~H~~	~~SI~~	~~S~~	~~1E~~	~~EMC~~
~~TEMP ROOM UFA06086~~	~~30KLL64CT094~~	~~30UFA06086~~	~~M~~	~~H~~	~~SI~~	~~S~~	~~1E~~	~~EMC~~
~~TEMP ROOM UFA06095~~	~~30KLL64CT095~~	~~30UFA06095~~	~~M~~	~~H~~	~~SI~~	~~S~~	~~1E~~	~~EMC~~
~~TEMP ROOM UFA10089~~	~~30KLL64CT097~~	~~30UFA10089~~	~~M~~	~~H~~	~~SI~~	~~S~~	~~1E~~	~~EMC~~
TEMP ROOM UFA01076~~10095~~	30KLL64CT102~~098~~	30UFA01076~~10095~~	M	H	SI	S	1E	EMC
TEMP ROOM UFA01088~~2~~	30KLL64CT101	30UFA01088~~2~~	M	H	SI	S	1E	EMC
TEMP ROOM UFA01077~~88~~	30KLL64CT103	30UFA01077~~88~~	M	H	SI	S	1E	EMC
TEMP ROOM UFA06087~~10071~~	30KLL64CT104	30UFA06087~~10071~~	M	H	SI	S	1E	EMC
1 TEMP ROOM UFA10070~~03057~~	30KLL64CT106	30UFA10070~~03057~~	M	H	SI	S	1E	EMC
~~2 TEMP ROOM UFA03057~~	~~30KLL64CT109~~	~~30UFA03057~~	~~M~~	~~H~~	~~SI~~	~~S~~	~~1E~~	~~EMC~~
~~TEMP ROOM UFA05076~~	~~30KLL64CT111~~	~~30UFA05076~~	~~M~~	~~H~~	~~SI~~	~~S~~	~~1E~~	~~EMC~~
~~TEMP ROOM UFA06082~~	~~30KLL64CT113~~	~~30UFA06082~~	~~M~~	~~H~~	~~SI~~	~~S~~	~~1E~~	~~EMC~~
~~TEMP ROOM UFA06084~~	~~30KLL64CT114~~	~~30UFA06084~~	~~M~~	~~H~~	~~SI~~	~~S~~	~~1E~~	~~EMC~~
~~TEMP ROOM UFA06085~~	~~30KLL64CT115~~	~~30UFA06085~~	~~M~~	~~H~~	~~SI~~	~~S~~	~~1E~~	~~EMC~~
~~TEMP ROOM UFA06086~~	~~30KLL64CT116~~	~~30UFA06086~~	~~M~~	~~H~~	~~SI~~	~~S~~	~~1E~~	~~EMC~~
~~TEMP ROOM UFA06095~~	~~30KLL64CT117~~	~~30UFA06095~~	~~M~~	~~H~~	~~SI~~	~~S~~	~~1E~~	~~EMC~~
~~TEMP ROOM UFA10070~~	~~30KLL64CT119~~	~~30UFA10070~~	~~M~~	~~H~~	~~SI~~	~~S~~	~~1E~~	~~EMC~~
~~TEMP ROOM UFA10082~~	~~30KLL64CT120~~	~~30UFA10082~~	~~M~~	~~H~~	~~SI~~	~~S~~	~~1E~~	~~EMC~~
~~TEMP ROOM UFA10089~~	~~30KLL64CT121~~	~~30UFA10089~~	~~M~~	~~H~~	~~SI~~	~~S~~	~~1E~~	~~EMC~~
~~TEMP ROOM UFA10095~~	~~30KLL64CT122~~	~~30UFA10095~~	~~M~~	~~H~~	~~SI~~	~~S~~	~~1E~~	~~EMC~~
~~TEMP ROOM UFA13025~~	~~30KLL64CT124~~	~~30UFA13025~~	~~M~~	~~H~~	~~SI~~	~~S~~	~~1E~~	~~EMC~~
~~TEMP ROOM UFA13070~~	~~30KLL64CT129~~	~~30UFA13070~~	~~M~~	~~H~~	~~SI~~	~~S~~	~~1E~~	~~EMC~~
TEMP ROOM UFA17025	30KLL64CT130	30UFA17025	M	H	SI	S	1E	EMC
TEMP ROOM UFA17057	30KLL64CT132	30UFA17057	M	H	SI	S	1E	EMC
~~TEMP ROOM UFA17056~~	~~30KLL64CT134~~	~~30UFA17056~~	~~M~~	~~H~~	~~SI~~	~~S~~	~~1E~~	~~EMC~~
~~TEMP ROOM UFA17072~~	~~30KLL64CT136~~	~~30UFA17072~~	~~M~~	~~H~~	~~SI~~	~~S~~	~~1E~~	~~EMC~~
~~1 TEMP ROOM UFA21057~~	~~30KLL64CT138~~	~~30UFA21057~~	~~M~~	~~H~~	~~SI~~	~~S~~	~~1E~~	~~EMC~~

DRAFT

09.04.02-1

Table 3.11-1—List of Environmentally Qualified Electrical/I&C Equipment
Sheet 91 of 98

Name Tag (Equipment Description)	Tag Number	Local Area KKS ID (Room Location)	EQ Environment (Note 1)	Radiation Environment Zone (Note 2)	EQ Designated Function (Note 3)	Safety Class (Note 4)		
~~2 TEMP ROOM UFA21057~~	~~30KLL64CT140~~	~~30UFA21057~~	~~M~~	~~H~~	~~SI~~	~~S~~	~~1E~~	~~EMC~~
~~TEMP ROOM UFA21072~~	~~30KLL64CT142~~	~~30UFA21072~~	~~M~~	~~H~~	~~SI~~	~~S~~	~~1E~~	~~EMC~~
~~TEMP ROOM UFA21095~~	~~30KLL64CT144~~	~~30UFA21095~~	~~M~~	~~H~~	~~SI~~	~~S~~	~~1E~~	~~EMC~~
~~TEMP ROOM UFA24070~~	~~30KLL64CT149~~	~~30UFA24070~~	~~M~~	~~H~~	~~SI~~	~~S~~	~~1E~~	~~EMC~~
~~TEMP ROOM UFA24072~~	~~30KLL64CT150~~	~~30UFA24072~~	~~M~~	~~H~~	~~SI~~	~~S~~	~~1E~~	~~EMC~~
~~TEMP ROOM UFA24080~~	~~30KLL64CT152~~	~~30UFA24080~~	~~M~~	~~H~~	~~SI~~	~~S~~	~~1E~~	~~EMC~~
~~TEMP ROOM UFA24095~~	~~30KLL64CT154~~	~~30UFA24095~~	~~M~~	~~H~~	~~SI~~	~~S~~	~~1E~~	~~EMC~~
~~TEMP ROOM UFA01083~~	~~30KLL64CT162~~	~~30UFA01083~~	~~M~~	~~H~~	~~SI~~	~~S~~	~~1E~~	~~EMC~~
~~TEMP ROOM UFA01085~~	~~30KLL64CT165~~	~~30UFA01085~~	~~M~~	~~H~~	~~SI~~	~~S~~	~~1E~~	~~EMC~~
~~TEMP ROOM UFA05054~~	~~30KLL64CT169~~	~~30UFA05054~~	~~M~~	~~H~~	~~SI~~	~~S~~	~~1E~~	~~EMC~~
~~TEMP ROOM UFA24081~~	~~30KLL64CT178~~	~~30UFA24081~~	~~M~~	~~H~~	~~SI~~	~~S~~	~~1E~~	~~EMC~~
~~TEMP ROOM UFA01076~~	~~30KLL64CT198~~	~~30UFA01076~~	~~M~~	~~H~~	~~SI~~	~~S~~	~~1E~~	~~EMC~~
~~TEMP ROOM UFA01077~~	~~30KLL64CT199~~	~~30UFA01077~~	~~M~~	~~H~~	~~SI~~	~~S~~	~~1E~~	~~EMC~~
~~3 PRESS FP RM~~	~~30KLL81CP020~~	~~30UFA29015~~	~~M~~	~~H~~	~~SI~~	~~S~~	~~1E~~	~~EMC~~
Main Control Room Air Conditioning System (CRACS)								
Inlet Fire Damper - Div 1	30SAB01AA001	32UJK31034	M	M	SI	S		EMC
Inlet Isolation Damper - Div 1	30SAB01AA002	32UJK31034	M	M	SI	S	1E	EMC
Makeup Air Isolation Damper - Div 1	30SAB01AA003	32UJK31034	M	M	SI	S	1E	EMC
Recirc. Return Air Fire Damper - Div 1 A	30SAB01AA007	32UJK31034	M	M	SI	S		EMC
Recirc. Return Air Fire Damper - Div 1 B	30SAB01AA008	32UJK31034	M	M	SI	S		EMC
Recirc. Air Vol Control Damper - Div 1	30SAB01AA012	32UJK31034	M	M	SI	S	1E	EMC
Recirc. Supply Air Fire Damper - Div 1 A	30SAB01AA014	32UJK31034	M	M	SI	S		EMC
Recirc. Supply Air Fire Damper - Div 1 B	30SAB01AA015	32UJK31034	M	M	SI	S		EMC
Recirc. Vol. Cont. Posit. Indic. - Div1	30SAB01CG012	32UJK31034	M	M	SI	S	1E	EMC
Recirc. HEPA DP - Div 1	30SAB01CP002	32UJK31034	M	M	SI	S	1E	EMC
Makeup Air Pre-Filter DP - Div 1	30SAB01CP501	32UJK31034	M	M	SI	S	1E	EMC
Recirc. HEPA DP (Local) - Div 1	30SAB01CP504	32UJK31034	M	M	SI	S	1E	EMC
Makeup Air Inlet Temp - Div 1	30SAB01CT001	32UJK31034	M	M	SI	S	1E	EMC
Makeup Air Heater Outlet Temp - Div 1 A	30SAB01CT002	32UJK31034	M	M	SI	S	1E	EMC
Makeup Air Heater Outlet Temp - Div 1 B	30SAB01CT003	32UJK31034	M	M	SI	S	1E	EMC
Makeup Air Heater Outlet Temp - Div 1 C	30SAB01CT004	32UJK31034	M	M	SI	S	1E	EMC
Recirc. CoolCoil Inlet Temp (Local)-Div1	30SAB01CT501	32UJK31034	M	M	SI	S	1E	EMC
Recirc. CoolCoil Exit Temp (Local)-Div1	30SAB01CT502	32UJK31034	M	M	SI	S	1E	EMC
Recirc. Return Air Fire Damper - Div 2 A	30SAB02AA007	32UJK31035	M	M	SI	S		EMC
Recirc. Return Air Fire Damper - Div 2 B	30SAB02AA008	32UJK31035	M	M	SI	S		EMC
Recirc. Supply Air Fire Damper - Div 2 A	30SAB02AA014	32UJK31035	M	M	SI	S		EMC
Recirc. Supply Air Fire Damper - Div 2 B	30SAB02AA015	32UJK31035	M	M	SI	S		EMC
Recirc. HEPA DP - Div 2	30SAB02CP002	32UJK31035	M	M	SI	S	1E	EMC
Recirc. HEPA DP (Local) - Div 2	30SAB02CP504	32UJK31035	M	M	SI	S	1E	EMC
Recirc. CoolCoil Inlet Temp (Local)-Div2	30SAB02CT501	32UJK31035	M	M	SI	S	1E	EMC
Recirc. CCoil Outlet Temp (Local) - Div2	30SAB02CT502	32UJK31035	M	M	SI	S	1E	EMC
Recirc. Return Air Fire Damper - Div 3 A	30SAB03AA007	33UJK31035	M	M	SI	S		EMC
Recirc. Return Air Fire Damper - Div 3 B	30SAB03AA008	33UJK31035	M	M	SI	S		EMC
Recirc. Supply Air Fire Damper - Div 3 A	30SAB03AA014	33UJK31035	M	M	SI	S		EMC
Recirc. Supply Air Fire Damper - Div 3 B	30SAB03AA015	33UJK31035	M	M	SI	S		EMC
Recirc. HEPA DP - Div 3	30SAB03CP002	33UJK31034	M	M	SI	S	1E	EMC

DRAFT

9.4 Air Conditioning, Heating, Cooling and Ventilation Systems

The heating, ventilation, and air-conditioning (HVAC) system for each major building or area is provided in the following subsections.

9.4.1 Main Control Room Air Conditioning System

The main control room air conditioning system (CRACS) is designed to maintain a controlled environment in the control room envelope (CRE) area for the comfort and safety of control room personnel and to support operability of the control room components during normal operation, anticipated operational occurrences and design basis accidents. CRACS is also relied upon to cope with and recover from a station blackout (SBO) event.

The air conditioning system for the CRE area operates in the recirculation mode with fresh air makeup. The fresh outside air intake and recirculated air are filtered and conditioned through the filtration trains. The conditioned air is then supplied to the CRE area. During a site radiological contamination event, the fresh air intake is redirected through the iodine filtration trains.

The main control room (MCR) habitability system, including the definition of the CRE area, is addressed in Section 6.4.

Under emergency conditions, when the iodine filtration train subsystem of CRACS is utilized, the subsystem function is designated as control room emergency filtration (CREF). See Technical Specification 3.7.10 in Chapter 16. 09.04.01-1

9.4.1.1 Design Bases

The CRACS is primarily a safety-related system with portions serving non-safety-related functions.

The safety-related portions are designed to Seismic Category I criteria requirements.

The non-safety-related portions of the CRACS are the restroom/kitchen exhaust fan, and smoke detectors.

The U.S. EPR meets:

- GDC 2, as it relates to meeting the guidance of RG 1.29 (position C.1 for the safety-related portions of the CRACS and position C.2 for those non-safety-related portions of which failure could reduce the functioning of any safety-related or Seismic Category I system components to an unacceptable safety level). The CRACS components are located inside the Safeguard Building (SB) divisions two and three. These buildings are designed to withstand the effect of natural phenomena, such as earthquake, tornados, hurricanes, floods, and external missiles

DRAFT

- GDC 4, as it relates to the CRACS by design, to protect against adverse environmental conditions and dynamic effects. The CRACS accommodates the effects of, and is compatible with the environmental conditions associated with normal operation, maintenance, testing, and postulated accidents.

- GDC 5, as it relates to the CRACS system because safety-related components are not shared with any other nuclear power units.

- GDC 19, as it relates to the CRACS system to provide adequate protection against radiation and hazardous chemical releases to permit access to and occupancy of the control room under accident conditions. The control room occupancy protection requirements meet the guidance of RG 1.78. RG 1.52 and 1.140 (GDC 60). In case of an alarm from the inlet air radiation monitors, the CRACS directs the air intake automatically through activated carbon filtration beds. The air from CRE areas can also be recirculated through the same activated carbon filtration beds.

- GDC 60, as it relates to the release of radioactive materials to the environment.

~~All components of the CRACS except the restroom/kitchen exhaust fan, smoke detectors, and electric heaters to CRE rooms are safety related and designed to Seismic Category I requirements.~~

- ~~The CRACS components are located inside the Safeguard Building (SB) divisions two and three. These buildings are designed to withstand the effect of natural phenomena, such as earthquake, tornados, hurricanes, floods and external missiles (GDC 2).~~

- ~~The quality group classification (Section 3.2) meets the requirements of RG 1.26. The seismic design of the system meets the guidance of RG 1.29 (Position C.1 for the safety-related portion and Position C.2 for the non-safety-related portion).~~

~~The CRACS components are appropriately protected against dynamic effects and designed to accommodate the effects of, and be compatible with the environmental conditions of normal operation, maintenance, testing, and postulated accidents (GDC 4).~~ Consideration of the environmental and dynamic effects of internal and external missiles and postulated piping failures on the CRACS is addressed in Section 3.5.1.1, Section 3.5.2, and Section 3.6.1.

- ~~The safety-related components and systems of the CRACS are not shared among nuclear power units (GDC 5).~~

- ~~The CRACS provides adequate protection against radiation and hazardous chemical releases to permit access to and occupancy of the control room under accident conditions (GDC 19). The control room occupancy protection requirements meet the guidance of RG 1.78.~~

- ~~The release of radioactive materials to the environment is controlled by meeting the guidance of RG 1.52 and 1.140 (GDC 60). In case of an alarm from the area radiation monitors, the CRACS directs the air intake automatically through~~

DRAFT

09.04.01-1

~~activated carbon filtration beds. The air from CRE areas can also be recirculated through the same activated carbon filtration beds.~~

Capability for withstanding or coping with a SBO event is provided to comply with the requirements of 10CFR 50.63. Acceptance is based on meeting the applicable guidance of RG 1.155, including position C.3.2.4. Refer to Section 8.4 for a description of the design features to cope with the SBO event.

The CRACS maintains habitability of the CRE areas during a site radiological contamination event or toxic contamination of the environment (Refer to Section 6.4).

~~Control and~~During a postulated event, the control room is maintained at a minimum positive pressure of 0.125 inches water gauge relative to the surrounding environment ~~as a minimum within the CRE areas with respect to the surrounding area~~ to prevent uncontrolled incoming leakage.

During normal operation, the control room is maintained at a minimum positive pressure of 0.01 inches water gauge relative to the surrounding environment.

The CRACS maintains system performance in the event of failure of a single active safety-related component.

The CRACS outside air intake is capable of detecting radiation and smoke and toxic chemicals (see Section 6.4.2.4). Associated monitors actuate alarms in the MCR. Upon receipt of a containment isolation signal, or high radiation alarm signal in the air intake duct, the iodine filtration train starts automatically and the outside air and CRE recirculation air are automatically diverted through the iodine filtration train. The outside makeup air along with the CRE recirculation air maintains a positive pressure inside the CRE area relative to the adjacent areas. The CRE air inlet and recirculation dampers operate automatically.

Upon actuation of the plant toxic gas alarm signal, the outside air intake damper~~s~~ ~~close automatically~~ at the location of the high alarm will be closed by an operator and the CRE air is automatically diverted in the recirculation mode ~~without outside air~~ through the CREF filtration units.

09.04.01-1

The CRACS is capable of isolating all non-safety-related system penetrations of the CRE boundary so that occupation and habitability of the control room is not compromised.

Air conditioning and heating loads for the CRE rooms is calculated using methodology identified in ASHRAE Handbook (Reference 8) as follows:

- Summer air conditioning loads are calculated with a maximum outside air design temperature 0 percent exceedance value, using U.S. EPR Site Design Envelope

DRAFT

temperature (See Table 2.1-1). The analysis is completed for both a normal and accident plant alignment configuration.

- The CRACS cooling supply units are designed to provide cooling as required to prevent the CRE room temperatures from exceeding their maximum design temperature.

- Winter heating loads are calculated with the plant operating in an outage alignment configuration. Winter heat loads are calculated with a minimum outside air design temperature 0 percent exceedance value, using U.S. EPR Site Design Envelope temperature (See Table 2.1-1).

The CRACS supply air duct heaters are designed to operate for "comfort conditions only" as required when the CRE room temperature is less than the minimum "comfort temperature" set point value. The CRACS supply air duct heaters are not required to operate during accident conditions.

The CRACS maintains the following temperature ranges for the areas serviced:

Room	Temperature	Humidity
– Main Control Room:	68°F to 78°F	30 – 60%
– I&C Computer Rooms, Rest Rooms:	65°F to 78°F	30 – 60%
– HVAC Rooms:	50°F to 95°F	30 – 60%
– Other areas of CRE:	65°F to 79°F	20 – 80%

- ~~The CRACS maintains the following temperature ranges for the areas serviced:~~
  - ~~Main Control Room: 65°F to 76°F~~
  - ~~Other areas of CRE: 68°F to 79°F.~~

DRAFT

9.4.1.2 System Description

09.04.01-1

9.4.1.2.1 General Description

The CRACS is designed to maintain acceptable ambient conditions inside the CRE areas to provide for proper operation of equipment and for personnel access to conduct inspection, testing and maintenance. The CRE area is shown in Figures 6.4-1 through 6.4-3.

The CRACS consists of following subsystems:

- Air intake.

- Iodine filtration train.

6. ANSI/AMCA-300-1985, "Reverberant Room Method of Testing Fans for Rating Purposes," American National Standards Institute/Air Movement and Control Association International, 1985.

7. UL 555, "Standard for Fire Dampers," Underwriters Laboratories, Sixth Edition, June 1999.

09.04.01-1

8. "ASHRAE Handbook Fundamentals," American Society of Heating, Refrigeration and Air Conditioning Engineers, Inc., 2005.

DRAFT

Figure 9.4.1-3—Control Room Envelope

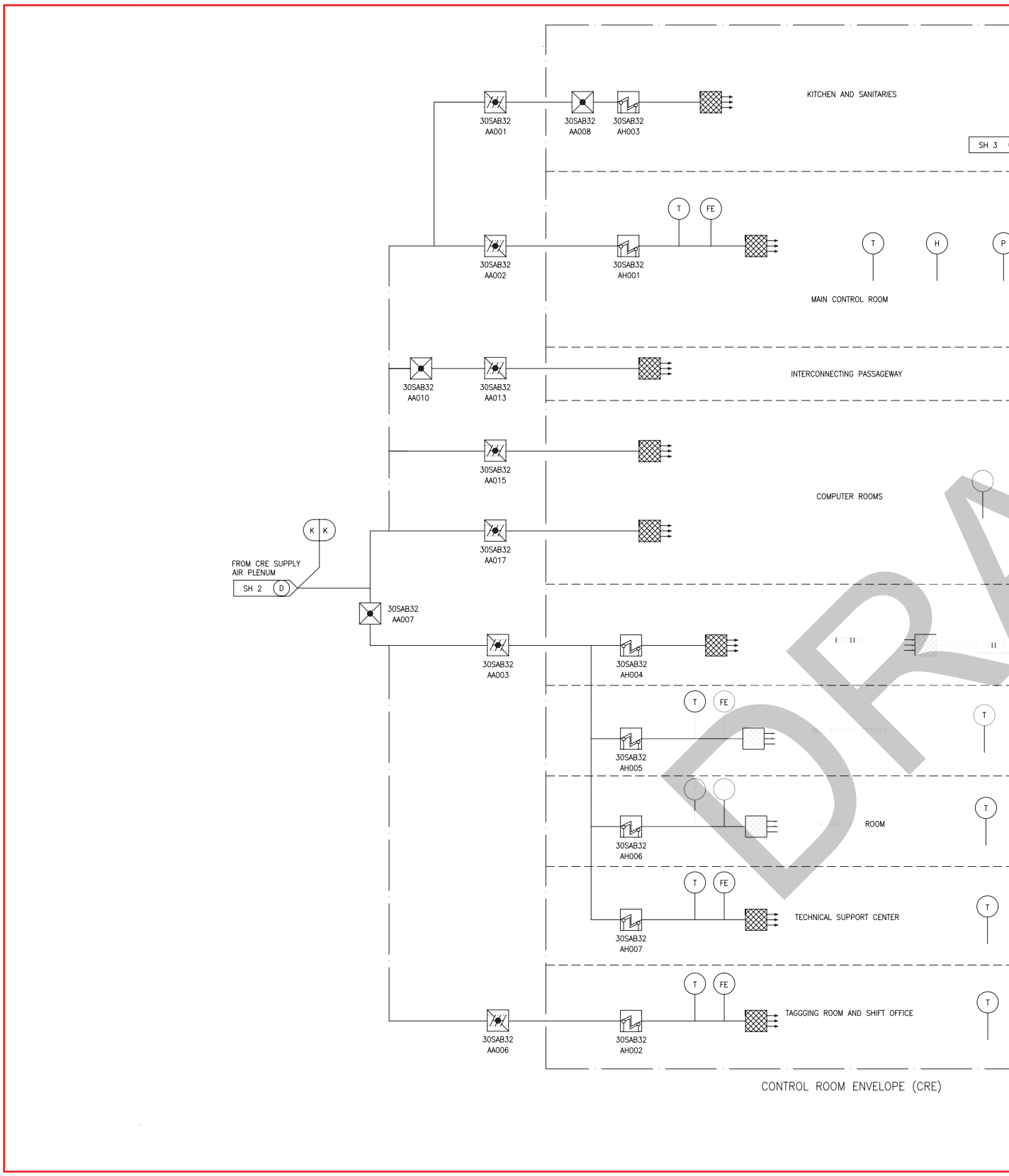

9.4.2 Fuel Building Ventilation System

The fuel building ventilation system (FBVS) is designed to maintain acceptable ambient conditions in the Fuel Building (FB), to permit personnel access, and to control airborne radioactivity in the area during normal operation, anticipated occurrences, and following fuel handling accidents.

The conditioned air supply to the FB is provided by the nuclear auxiliary building ventilation system (NABVS) (refer to Section 9.4.3). The exhaust from the building is also processed by the NABVS through a filtration train, and the exhaust air is directed to the plant stack (refer to Section 9.4.3).

9.4.2.1 Design Bases

The following components are safety-related and designed to Seismic Category I requirements:

- Fuel handling hall isolation dampers.
- Isolation dampers for the fuel handling hall located in front of the equipment hatch.
- Isolation dampers for the room located in front of the emergency airlock.
- NABVS supply and exhaust isolation dampers to and from FBVS.
- FB isolation dampers to safeguard building ventilation system (SBVS).
- Electric heaters for heating of ~~rooms which have safety-related systems, structures, or components containing borated fluid, and the rooms surrounding~~ the extra borating system pump room and pipe chase.~~tanks.~~
- Recirculation cooling units in the extra borating system pump rooms, and fuel pool cooling system pump rooms.
- FBVS exhaust duct.

09.04.02-1

The FBVS air supply duct and other components of the FBVS are designated as Supplemental Grade (NS-AQ) safety class and Seismic Category II.

The FBVS components are located inside the FB structure, which is designed to withstand the effects of natural phenomena, such as earthquake, tornados, hurricanes, floods and external missiles (GDC-2).

The safety functions of the FB ventilation system can be performed assuming a single active component failure coincident with the loss of offsite power (LOOP).

DRAFT

The seismic design of the system components meets the guidance of RG 1.29 (Position C.1 for safety-related portion and Position C.2 for non-safety-related portion). The quality group classification and Seismic Category of system components meet the requirements of RG 1.26 and 1.29.

The safety-related components and systems of the FB ventilation system are not shared among nuclear power units (GDC-5).

The release of radioactive material to the environment is controlled by meeting the guidance of RG 1.140, positions C.2 and C.3 (GDC-60). RG 1.52 is not applicable because the FBVS is not required to operate during post-accident engineered safety features (ESF) atmospheric cleanup. In case of radioactive contamination, the system will automatically direct the building exhaust through activated charcoal filtration beds located in the NABVS.

The FBVS provides appropriate ventilation and filtration to limit potential release of airborne radioactivity to the environment from the fuel storage facility under normal operation and in the event of a fuel handling accident in the fuel pool area. The design of the ventilation system meets the guidance of RG 1.13, Position C.4 (GDC-61).

The FBVS provides the following important non-safety-related functions:

- Controls and maintains a negative pressure during normal operation within the FB relative to the outside environment. Rooms identified as having possible radioactive contamination are designed to be at a negative pressure relative to the adjacent rooms to make sure air flows from areas of low radioactivity to areas of potentially higher radioactivity.
- Maintains these ambient conditions inside the FB during normal and fuel handling operation:

  A. Minimum temperature: 50°F.

  B. Maximum temperature: 113°F.

  C. Humidity: 25 to 70 percent.

  The following ambient conditions are maintained in the fuel pool area:

  D. Minimum temperature: 68°F.

  E. Maximum temperature: 104°F.

  F. Humidity: 30 to 70 percent.

09.04.02-1

- Provides heating via air supply duct heaters and fan heaters to maintain minimum ambient room temperature. ~~Provides heating, via electric heaters, in the boron~~

DRAFT

~~rooms to prevent crystallization in the borating system piping.~~ Electric heaters in the fuel pool rooms prevent condensation on the walls.

09.04.02-1

- Maintains the airborne radioactivity levels within the FB below the maximum permissible concentrations limits of 10CFR20 and consistent with the as low as reasonably achievable (ALARA) dose objectives of 10CFR50, Appendix I (refer also to Section 12.1 and Section 12.3.3).

9.4.2.2 System Description

A simplified diagram of the FBVS is shown in Figure 9.4.2-1—Fuel Building Ventilation System.

Refer to Section 12.3.6.5.6 for ventilation system design features which demonstrate compliance with the requirements of 10 CFR 20.1406.

9.4.2.2.1 General Description

The FBVS provides air distribution for ventilation of the FB. The air supply to, and exhaust from, each room of the FB is provided by a network of supply and exhaust ducts which are connected to the NABVS. The conditioned air is supplied to all levels of the building through a duct distribution network. The flow rate to each room is calculated based on the minimum air renewal rate, equipment heat loads, and heat balance between the rooms. This maintains ambient conditions during normal operation within prescribed limits for operation of equipment and personnel safety and comfort.

The supply air is the conditioned outside air that is filtered, cooled or heated, humidified by the NABVS, and delivered to the FB rooms through the FBVS supply duct network.

The FBVS exhaust system is designed to limit spread of the airborne contaminants and to maintain a negative pressure in the FB with respect to the outside environment. The FBVS exhaust is processed through the filtration trains of the NABVS prior to discharge through the plant stack. The FBVS is divided into two subsystems referred to as Cell 4 and Cell 5. The cells separate the ventilation systems serving the redundant systems in the FB and each cell serves approximately half of the building. The supply and exhaust duct branches to each room are fed from the main supply and exhaust HVAC shafts in the building. These HVAC shafts are connected to the NABVS.

If high radiation is detected within the FB, the exhaust air is diverted to the iodine filtration trains of the NABVS prior to discharge through the plant stack (refer to Section 9.4.3).

DRAFT

Recirculation cooling units are used for fuel pool cooling system pump rooms, and extra-borating system pump rooms to make sure that acceptable temperatures are maintained within the rooms for proper operation of the components and safe personnel access. The recirculation cooling units for the fuel pool cooling system pump rooms operate when the pumps are in operation. The recirculation cooling units for the extra-borating system pump rooms operate based on room temperature to provide recycled cool air.

During plant outages, the supply and exhaust ducts of the room in front of the equipment hatch are isolated so that the air flow is from the FB to the Reactor Building (RB). When the equipment hatch is opened, this room is considered as part of the RB and is therefore ventilated by the RB ventilation system.

In the event radioactive contamination is detected in the FB during normal operation, or a potential airborne radioactive hazard exists during maintenance of equipment or systems, the exhaust air is diverted to iodine filtration trains of the NABVS prior to discharge through the plant stack. Iodine activity is detected separately in each cell.

Abnormal Operating Conditions

Failure of Supply and Exhaust Air

The FBVS supply and exhaust air systems are non-safety related. Failure of supply and exhaust air systems in the NABVS will lead to the loss of supply and exhaust functions of FBVS. In this case, negative pressure with respect to the outside atmosphere and room temperatures of the FB cannot be maintained; however, the recirculation cooling units and heaters will maintain acceptable temperatures in the fuel pool cooling and extra borating system pump rooms.

09.04.02-1

Failure of Heaters and Recirculation Cooling Units

In each room provided with safety-related heaters, ~~a sufficient number of~~ two 100 percent capacity heaters are provided to fulfill the single failure criteria of the heaters. ~~Redundant heaters, two 100 percent capacity units, are provided in small rooms. Three 50 percent or four 33 percent capacity heaters are provided for larger rooms.~~ For heaters serving a safety-related function ~~the boron and fuel pool areas~~, the required power has been calculated based on failure of an electrical division. Thus, failure of one electrical division will not prevent other divisions from supplying power and fulfilling their functions.

Failure of one recirculation cooling unit will lead to the loss of cooling in the corresponding room. As a result, the extra borating and fuel pool cooling system pumps located in that room may not operate properly. Redundant extra borating and fuel pool cooling system pumps located in a separate room and served from a separate train will, however, still be operational.

DRAFT

The following equipment will remain operational during LOOP:

- Electric heaters in the extra borating pump rooms and pipe chase.~~boron system rooms.~~

09.04.02-1

- Recirculation cooling units in the fuel pool cooling system pump rooms, and extra borating system pump rooms.
- Dampers for isolating the fuel pool room and FB.

The power for the equipment listed above is supplied from the corresponding emergency diesel generators.

Station Blackout (SBO)

In the event of SBO, the following equipment will remain operational:

- Electric heaters in the extra borating system pump rooms and pipe chase.

09.04.02-1

- Isolation dampers for the fuel pool room so that the dampers can be closed in the event of high temperature in the fuel pool.

The power for the equipment listed above is supplied from the SBO emergency diesel generators (SBODG).

9.4.2.3 Safety Evaluation

The FBVS provides the following safety-related functions:

- Automatic isolation of the supply and exhaust air to the fuel handling hall in order to mitigate the consequences of a fuel handling accident in the hall.
- Manual isolation from the main control room (MCR) of the supply and exhaust airflow to the hall in front of the equipment hatch prior to opening of the hatch. This isolation mitigates the consequences of a fuel handling accident in the RB with the hatch opened.
- Automatic isolation of the supply airflow to the room in front of the emergency airlock in order to mitigate the consequences of a fuel handling accident in the RB. The isolation of the exhaust airflow from the room in front of the emergency airlock is performed manually from the MCR prior to opening of the emergency airlock.
- Automatic isolation of the FB from NABVS supply and exhaust ducts in the event of containment isolation signal or high radiation signal in the RB. The SBVS maintains negative pressure in the FB and filters the FB atmosphere through SBVS iodine filtration trains.

09.04.02-1

- ~~Maintains ambient conditions for boron rooms during normal operation, abnormal operation, and postulated accident events.~~

DRAFT

- Maintains ambient conditions in the extra borating system pump rooms and pipe chase and the fuel pool cooling system pump rooms during normal, abnormal, and postulated accident events.

09.04.02-1

- Safety-related components can function as required with failure of a single active component. The safety-related redundant components are powered from different electrical divisions so that the system can remain operable in case of failure of one of the electrical divisions.

9.4.2.4 Inspection and Testing Requirements

Refer to Section 14.2 (test abstracts #081and #203) for initial plant startup test program. Initial in-place acceptance testing of FBVS components will be performed in accordance with Reference 1.

9.4.2.5 Instrumentation Requirements

Indication of the operational status of the equipment, position of dampers, instrument indications and alarms are provided in the MCR. Fans, motor-operated dampers, heaters and cooling units are operable from the MCR. Local instruments are provided to measure ~~differential pressure across filters,~~ flow, temperature, and pressure. The fire detection and sensors information is delivered to the fire detection system. The radiation instrumentation requirements for controlling airborne radioactivity releases via the plant stack are addressed in Section 11.5.

~~The minimum instrumentation, indication and alarms for ESF filter systems are provided in Table 9.4.1-1.~~

9.4.2.6 References

1. ASME AG-1-2003, "Code on Nuclear Air and Gas Treatment," The American Society of Mechanical Engineers, 2003 (including the AG-1a, 2004 Addenda).

2. UL 555, "Standard for Fire Dampers," Underwriter's Laboratories, Sixth Edition, June 1999.

DRAFT

Next File

The seismic design of the system components meets the guidance of RG 1.29 (Position C.1 for the safety-related portion and Position C.2 for the non-safety-related portion). The quality group classification and Seismic Category of system components meet the requirements of RG 1.26 and 1.29.

09.04.01-1

The safety-related components and systems of the FB ventilation system are not shared among nuclear power units (GDC-5).

The release of radioactive material to the environment is controlled by meeting the guidance of RG 1.140, positions C.2 and C.3 (GDC-60). RG 1.52 is not applicable because the FBVS is not required to operate during post-accident engineered safety features (ESF) atmospheric cleanup. In case of radioactive contamination, the system will automatically direct the building exhaust through activated charcoal filtration beds located in the NABVS.

The FBVS provides appropriate ventilation and filtration to limit potential release of airborne radioactivity to the environment from the fuel storage facility under normal operation and in the event of a fuel handling accident in the fuel pool area. The design of the ventilation system meets the guidance of RG 1.13, Position C.4 (GDC-61).

Air conditioning and heating loads for the FB Rooms are calculated using methodology identified in ASHRAE Handbook (Reference 3).

- Summer air conditioning loads will be calculated with a maximum outside air design temperature 0 percent exceedance value, using U.S. EPR Site Design Envelope Temperature (See Table 2.1-1). The analysis will be completed for both a normal and accident plant alignment configuration.
- The cooling supply units are designed to provide cooling as required to prevent the FB room temperatures from exceeding their maximum design temperature.
- Winter heating loads will be calculated with the plant operating in an outage alignment configuration. Winter heat loads will be calculated with a minimum outside air design temperature 0 percent exceedance value, using U.S. EPR Site Design Envelope Temperature (See Table 2.1-1).

The FBVS provides the following important non-safety-related functions:

- Controls and maintains a negative pressure during normal operation within the FB relative to the outside environment. Rooms identified as having possible radioactive contamination are designed to be at a negative pressure relative to the adjacent rooms to make sure air flows from areas of low radioactivity to areas of potentially higher radioactivity.
- Maintains these ambient conditions inside the FB during normal and fuel handling operation:

DRAFT

A. Minimum temperature: 50°F.

B. Maximum temperature: 113°F.

C. Humidity: 25 to 70 percent.

The following ambient conditions are maintained in the fuel pool area:

D. Minimum temperature: 68°F.

E. Maximum temperature: 104°F.

F. Humidity: ~~30~~25 to 70 percent. 09.04.01-1

- Provides heating via air supply duct heaters and fan heaters to maintain minimum ambient room temperature. ~~Provides heating, via electric heaters, in the boron rooms to prevent crystallization in the borating system piping.~~ Electric heaters in the fuel pool rooms prevent condensation on the walls.

- Maintains the airborne radioactivity levels within the FB below the maximum permissible concentrations limits of 10CFR20 and consistent with the as low as reasonably achievable (ALARA) dose objectives of 10CFR50, Appendix I (refer also to Section 12.1 and Section 12.3.3).

9.4.2.2 System Description

A simplified diagram of the FBVS is shown in Figure 9.4.2-1—Fuel Building Ventilation System.

Refer to Section 12.3.6.5.6 for ventilation system design features which demonstrate compliance with the requirements of 10 CFR 20.1406.

9.4.2.2.1 General Description

The FBVS provides air distribution for ventilation of the FB. The air supply to, and exhaust from, each room of the FB is provided by a network of supply and exhaust ducts which are connected to the NABVS. The conditioned air is supplied to all levels of the building through a duct distribution network. The flow rate to each room is calculated based on the minimum air renewal rate, equipment heat loads, and heat balance between the rooms. This maintains ambient conditions during normal operation within prescribed limits for operation of equipment and personnel safety and comfort.

The supply air is the conditioned outside air that is filtered, cooled or heated, humidified by the NABVS, and delivered to the FB rooms through the FBVS supply duct network.

DRAFT

9.4.2.6 References

1. ASME AG-1-2003, "Code on Nuclear Air and Gas Treatment," The American Society of Mechanical Engineers, 2003 (including the AG-1a, 2004 Addenda).

2. UL 555, "Standard for Fire Dampers," Underwriter's Laboratories, Sixth Edition, June 1999.

3. "ASHRAE Handbook Fundamentals," American Society of Heating, Refrigeration and Air Conditioning Engineers, Inc., 2005.

09.04.01-1

DRAFT

Figure 9.4.2-1—Fuel Bui

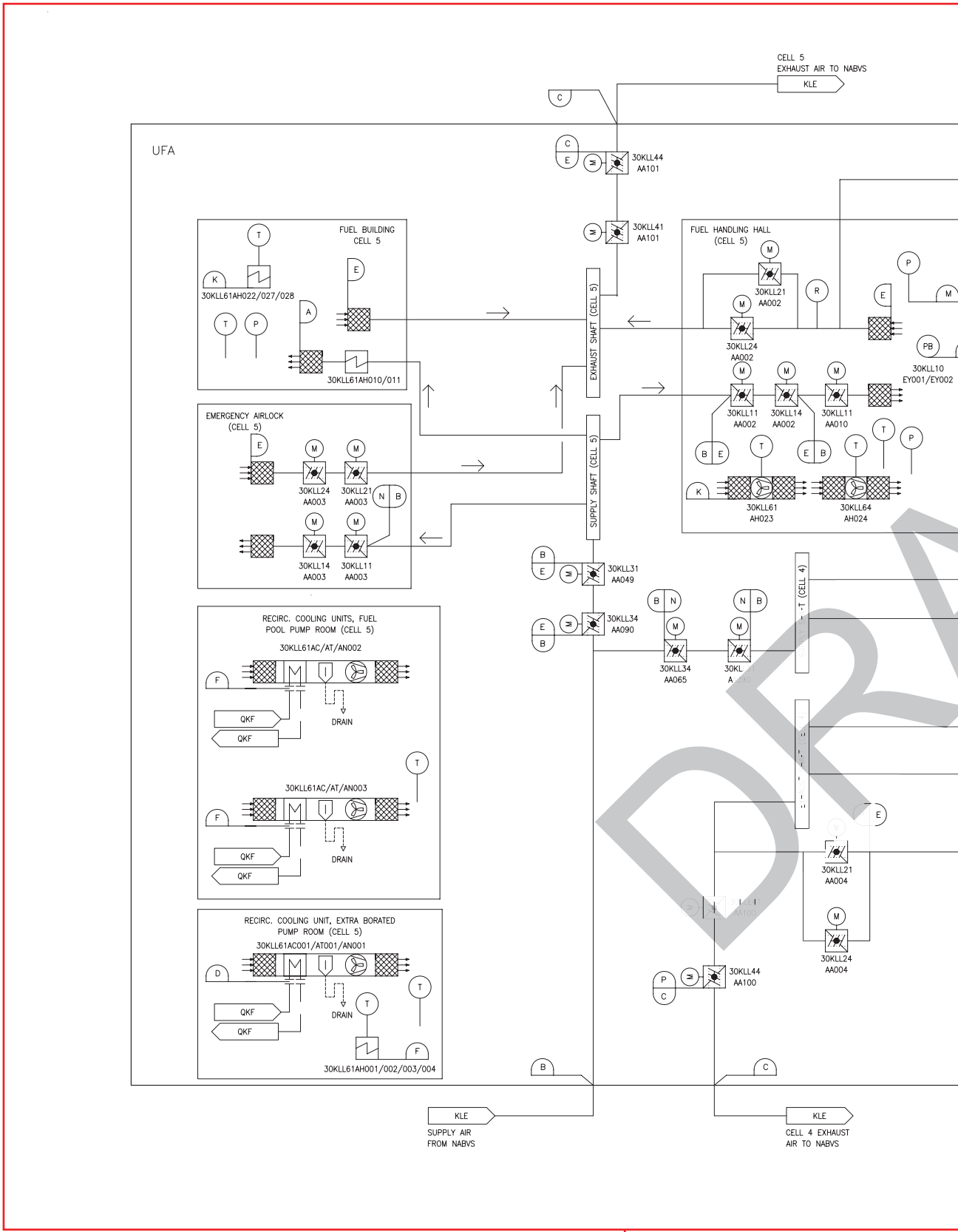

DRA

09.04.02-1

9.4.5 Safeguard Building Controlled-Area Ventilation System

Each of the four safeguard divisions is separated into two functional areas:

- Hot mechanical area serviced by the safeguard building controlled-area ventilation system (SBVS).
- Electrical, instrumentation and control (I&C) and heating, ventilation and air conditioning (HVAC) area serviced by the electrical division of the safeguard building ventilation system (SBVSE). Refer to Section 9.4.6.

The SBVS provides a suitable and controlled environment, in the mechanical areas of the Safeguard Buildings (SB) where engineered safety feature components are located, for personnel access and to allow safe operation of the equipment during normal plant operation, outages, under anticipated operational occurrences, and postulated accidental events.

The SBVS, through its interconnections to the SBVSE and the nuclear auxiliary building ventilation system (NABVS), provides conditioned air for ventilation to the mechanical part of the SBs. The conditioned air supply to all four divisions of SB is provided independently for each division by the SBVSE (refer to Section 9.4.6). The exhaust air (normal exhaust) from the four divisions of the SB is processed by the NABVS (refer to Section 9.4.3).

9.4.5.1 Design Bases

The SBVS is safety-related and designed to Seismic Category I requirements, except the following:

09.04.01-1

- ~~Supply air ductwork which is classified as supplemented grade safety (NS-AQ) and designed to Seismic Category II requirements.~~
- Electric air heating convectors (unit heaters) which are non-safety related and Non-Seismic. The heaters are located in stairwell and service access areas and are used for personnel comfort only.

The safety-related components of the SBVS are located inside the SB that is designed to withstand the effect of natural phenomena, such as earthquake, tornados, hurricanes, floods and external missiles (GDC 2). The SBVS vents and louvers are supplied by the SBVSE for supply and the NABVS for exhaust air.

The safety-related components of the SBVS are appropriately protected against dynamic effects and designed to accommodate the effects of, and to be compatible with, the environmental conditions associated with normal operation, maintenance, testing and postulated accidents. The safety-related components of the SBVS remain functional and perform their intended safety function after anticipated operational occurrences and design basis accidents, such as a fire, internal missiles, or pipe break

DRAFT

The SBVS can be used for containment building ventilation system (CBVS) low flow containment purge in an emergency for redundancy to the CBVS iodine filtration trains (refer to Section 9.4.7).

09.04.01-1

The seismic design of the system meets the guidance of RG 1.29 (position C.1 for the safety-related portions and position C.2 for the non-safety-related portions).

Air conditioning and heating loads for the SBVS rooms are calculated using methodology identified in ASHRAE Handbook (Reference 11).

- Summer air conditioning loads will be calculated with a maximum outside air design temperature 0 percent exceedance value, using U.S. EPR Site Design Envelope Temperature (See Table 2.1-1). The analysis will be completed for both a normal and accident plant alignment configuration.
- The recirculation cooling units are designed to provide cooling as required to prevent the SBVS room temperatures from exceeding their maximum design temperature.
- Winter heating loads are calculated with the plant operating in an outage alignment configuration. Winter heat loads will be calculated with a minimum outside air design temperature 0 percent exceedance value, using U.S. EPR Site Design Envelope Temperature (See Table 2.1-1).

The SBVS performs the following important non-safety-related system functions:

- With outside air ambient design temperature conditions of -40°F to 115°F, the SBVS maintains the following temperature and humidity ranges for the areas serviced.
  - Minimum temperature 50°F.
  - Maximum temperature ~~113~~104°F. 09.04.01-1
  - Humidity 25 to 70 percent.
- Controls and maintain a negative pressure within the hot mechanical areas of Safeguard Buildings relative to the outside environment.

09.04.01-1

The SBVS performs the following safety-related system functions:

- Maintains acceptable ambient conditions for the safety-related components in the hot mechanical rooms in the SB during accident conditions, taking into account internal and external heat loads.
- Maintains acceptable ambient conditions inside the emergency feed water system (EFWS) pumps and component cooling water system (CCWS) component rooms of the SB during accident conditions, taking into account internal and external heat loads.

DRAFT

09.04.01-1

The SBVS performs the following important non-safety-related system functions:

- Maintains acceptable ambient conditions (temperature and humidity) in the SB hot mechanical rooms for equipment operation and personnel comfort during normal plant operation and plant maintenance.
- Ventilates the hot mechanical rooms in the SB to maintain a good working environment for personnel in these areas during normal plant operation and plant maintenance.
- Provides personnel comfort heating for the service access areas and the stairwell areas during normal plant operation and plant maintenance.

9.4.5.2 System Description

9.4.5.2.1 General Description

The SBVS is composed of following subsystems:

- SB controlled-area air supply subsystem (see Figure 9.4.5-1).
- SB controlled-area exhaust air subsystem, (see Figure 9.4.5-2).

The SBVS provides ventilation to the four divisions of the SBs. The SB divisions one and four are located on opposite sides of the RB, while SB divisions two and three are housed together and located next to the RB.

The SBVS supplies conditioned air for ventilation to the mechanical area of the SB, divisions one, two, three and four. During normal operation the conditioned air supply to SB divisions is provided independently for each division by the SBVSE (refer to Section 9.4.6). The supply duct of each SB division is equipped with two isolation dampers and one volume control damper. The conditioned air is supplied to the cold and hot mechanical areas at all levels of the four SBs via a ductwork distribution network. The flow rate to each room is calculated based on the minimum air renewal rate, equipment heat loads and heat balance between the rooms to make sure that ambient conditions are maintained within prescribed limits for operation of equipment and the safety and comfort of personnel.

The SBVS air supply and exhaust flows are designed to prevent the spread of airborne contamination and to maintain a negative pressure in the SBs with respect to the outside environment.

The SBVS has two separate modes of exhaust:

- Operational Air Exhaust Mode–The exhaust air (normal exhaust) from all four divisions of the SBs (hot mechanical areas) connects to a single concrete duct in the annulus, which then runs via the FB and connects to the exhaust duct of the NABVS. The exhaust duct of each SB division is equipped with two isolation

DRAFT

2. ASME AG-1-2003, "Code on Nuclear Air and Gas Treatment," The American Society of Mechanical Engineers, 2003 (including the AG-1a, 2004 Addenda).

3. ANSI/ASHRAE Standard 52.2-1999, "Method of Testing General Ventilation Air-Cleaning Devices for Removal Efficiency by Particle Size," American National Standards Institute/American Society of Heating, Refrigerating and Air Conditioning Engineers, 1999.

4. ASME N510-1989 (R1995), "Testing of Nuclear Air-Treatment Systems," The American Society of Mechanical Engineers, 1989.

5. ANSI/AMCA-210-99, "Laboratory Methods of Testing Fans for Aerodynamic Performance Rating," American National Standards Institute/Air Movement and Control Association International, December 1999.

6. ANSI/AMCA-211-1987, "Certified Ratings Program–Air Performance," American National Standards Institute/Air Movement and Control Association International, 1987.

7. ANSI/AMCA-300-1985, "Reverberant Room Method of Testing Fans for Rating Purposes," American National Standards Institute/Air Movement and Control Association International, 1985.

8. UL 555, "Standard for Fire Dampers," Underwriters Laboratories, Sixth Edition, June 1999.

9. ASME N509, "Nuclear Power Plant Air-Cleaning Units and Components," American National Standards Institute/The American Society of Mechanical Engineers, 2002.

10. Regulatory Guide 1.52, Revision 3, "Design, Inspection, and Testing Criteria for Air Filtration and Adsorption Units of Post-Accident Engineered-Safety-Feature Atmosphere Cleanup Systems in Light-Water-Cooled Nuclear Power Plants," U.S. Nuclear Regulatory Commission, June 2001.

09.04.01-1

11. "ASHRAE Handbook Fundamentals," American Society of Heating, Refrigeration, and Air Conditioning Engineers, Inc., 2005.

DRAFT

Figure 9.4.5-1—Safeguard Building~~s~~ Controlled

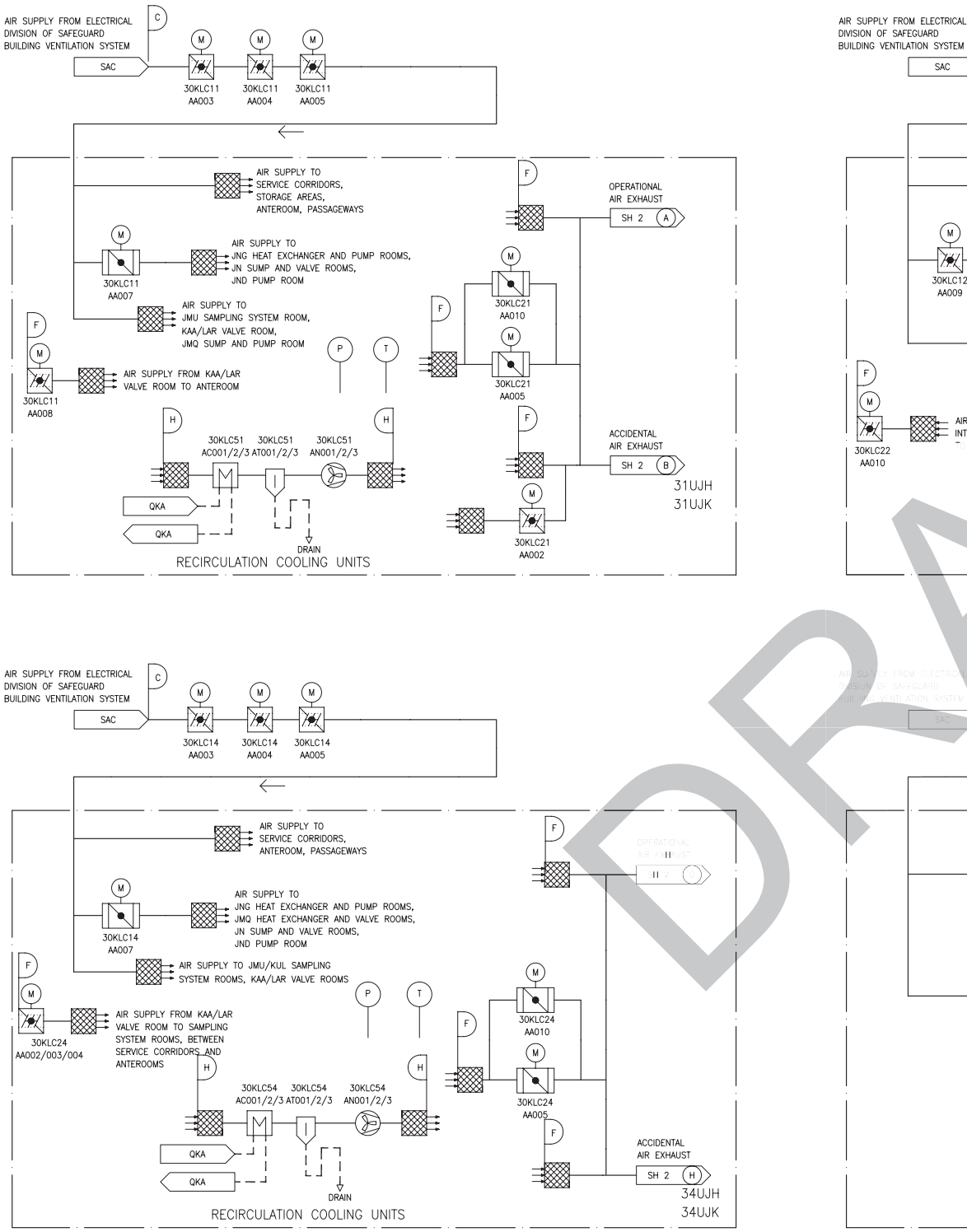

DRAFT

09.04.05-2

Figure 9.4.5-2—Safeguard Building~~s~~ Controlled-

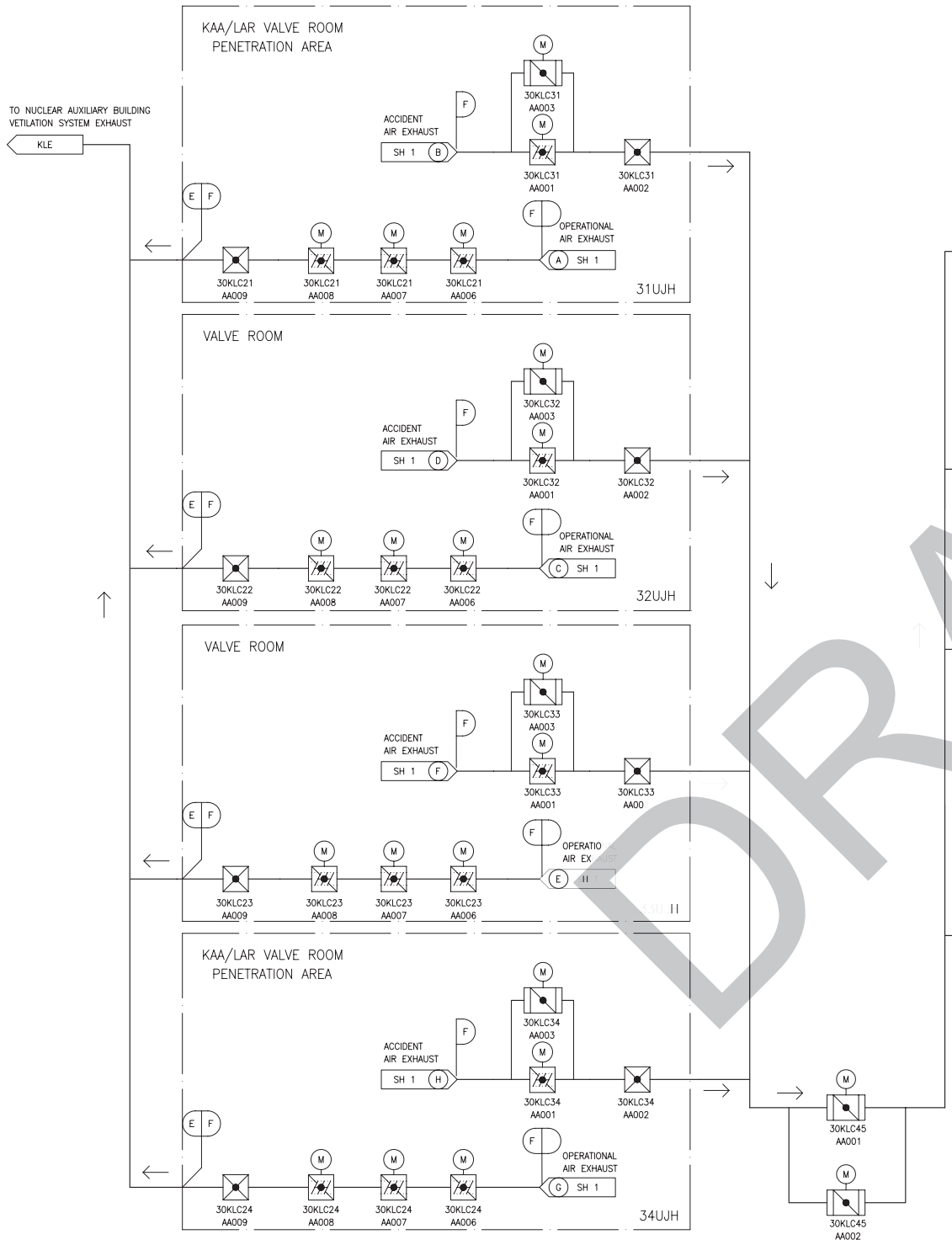

09.04.05-2

- 10CFR 50.63, as it relates to the SBSVE because during a station blackout (SBO), two of the four SBs are backed up by the SBO diesel generators alternate AC (AAC) power. An analysis to determine capability for withstanding or coping with a station blackout event as described by RG 1.155, position C.3.2.4, will be performed. The safety chilled water system (SCWS) chillers which provide cooling to the division 1 and 4 SBVSE air coolers and recirculation units are also powered by the SBO diesels and are available.

The SBVSE maintains acceptable ambient conditions in the SB during SBO conditions. It also ventilates the battery rooms and SCWS rooms in the SB during SBO conditions to maintain the hydrogen concentration and refrigerant concentration below the maximum allowable limits.

The SCWS chillers which provide cooling to the division 1 and 4 SBVSE air coolers and recirculation units are also powered by the SBO diesels and are available.

09.04.01-1

Air conditioning and heating loads for the SBVSE rooms are calculated using methodology identified in ASHRAE Handbook (Reference 3).

- Summer air conditioning loads will be calculated with a maximum outside air design temperature 0 percent exceedance value, using U.S. EPR Site Design Envelope Temperature (See Table 2.1-1). The analysis will be completed for both a normal and accident plant alignment configuration.
- The cooling supply units are designed to provide cooling as required to prevent the SBVSE room temperatures from exceeding their maximum design temperature.
- Winter heating loads will be calculated with the plant operating in an outage alignment configuration. Winter heat loads will be calculated with a minimum outside air design temperature 0 percent exceedance value, using U.S. EPR Site Design Envelope Temperature (See Table 2.1-1).
- The SBVSE supply air duct heaters are designed to operate as required when the supply air temperature is less than the minimum set point value.

DRAFT

With outside air ambient design temperature conditions of -40°F to 115°F, the SBVSE maintains the following temperature and humidity ranges for the areas serviced.

09.04.01-1

Room	Temperature	Humidity
Sanitary installations, changing rooms	6~~8~~5°F - 7~~7~~8°F	3~~5~~ 0- ~~7~~60%
I&C and Computer Room, RSS	68°F - 82°F	3~~5~~0 - ~~7~~60%
Switchboard Rooms	59°F - 86°F	3~~5~~0 - ~~7~~60%
Cable Floor	41°F - 95°F	~~2~~30 - ~~8~~60%

09.04.01-1

Battery Rooms	6~~8~~5°F - 77°F	3~~5~~0 - ~~7~~60%
HVAC Rooms	50°F - 95°F	20 - 80%
Cold Mechanical Areas, Emergency Feedwater Pump Rooms, and Component Cooling Water Pump Rooms	~~6~~50°F - ~~86~~104°F	30 - ~~7~~60%
Corridors	~~6~~50°F - ~~86~~104°F	30 - ~~7~~60%

The SBVSE performs the following safety-related system functions:

- Maintains acceptable ambient conditions for the safety-related components in the electrical and instrumentation and controls (I&C) rooms in the SB during accident conditions, taking into account internal and external heat loads.
- Maintains acceptable ambient conditions inside the emergency feed water system (EFWS) pumps and component cooling water system (CCWS) component rooms of the SB during accident conditions, taking into account internal and external heat loads.
- Ventilates the battery rooms and SCWS rooms in the SB to maintain the hydrogen and refrigerant concentration below maximum allowable limits during accident conditions.

The SBVSE performs the following important non-safety-related system functions:

- Maintains acceptable ambient conditions (temperature and humidity) in the SB for equipment operation and personnel comfort during normal plant operation and plant maintenance.
- Ventilates the battery rooms and safety chilled water system rooms in the SB to maintain the hydrogen concentration and the refrigerant concentration below maximum allowable limits during normal plant operation and plant maintenance.

9.4.6.2 System Description

9.4.6.2.1 General Description

The heating, ventilation and air conditioning (HVAC) of each electrical division (SBs 1 through 4) is provided by a separate and independent SBVSE train. In the normal operation state of the system, these functions are provided by a safety-related train. The SBVSE schematic diagram is shown in Figure 9.4.6-1 through Figure 9.4.6-4. Figure 9.4.6-1 and Figure 9.4.6-2 are simplified diagrams of the air intake, and the air supply and exhaust for SB divisions 1 and 4. Similarly, the simplified diagrams for SB divisions 2 and 3 are provided in Figure 9.4.6-3 and Figure 9.4.6-4.

DRAFT

9.4.6.4 Inspection and Testing Requirements

Refer to Section 14.2 (test abstracts #078 and #203) for initial plant startup test program. Initial inplace acceptance testing of SBVSE components will be performed in accordance with ASME AG-1-2003 (Reference 2).

The safety-related portions of the SBVSE are designed and located to permit required periodic testing.

9.4.6.5 Instrumentation Requirements

Indication of the operational status of the equipment, position of dampers, instrument indications and alarms are provided in the MCR. Fans, motor-operated dampers, heaters and cooling units are operable from the MCR. Local instruments are provided to measure differential pressure across filters, flow, temperature and pressure. The fire detection and sensors information is delivered to the fire detection system.

9.4.6.6 References

1. NUREG-CR/0660, Boner, G.L. and Hanners, H.W., "Enhancement of Onsite Emergency Diesel Generator Reliability," University of Dayton Research Institute UDR-TR-79-07 for U.S. Nuclear Regulatory Commission, January 1979.

2. ASME AG-1-2003, "Code on Nuclear Air and Gas Treatment," The American Society of Mechanical Engineers, 2003 (including the AG-1a, 2004 Addenda).

09.04.01-1

3. "ASHRAE Handbook Fundamentals," American Society of Heating, Refrigeration and Air Conditioning Engineers, Inc., 2005.

DRAFT

9.4.7 Containment Building Ventilation System

The containment building ventilation system (CBVS) is designed to maintain acceptable ambient conditions inside the Containment Building for proper operation of equipment and instrumentation during normal plant operation and normal shutdown (i.e., outages). The CBVS also provides acceptable ambient conditions for personnel access to the service compartment during normal plant operation, and equipment compartment during outage for conducting inspections, tests and maintenance during normal plant operation.

9.4.7.1 Design Bases

09.04.03-3

The containment low-flow purge exhaust subsystem outside of Containment is designated as a safety-related, Seismic Category I, ESF ventilation system.

The containment penetration isolation valves ~~and low-flow purge filtration system~~ are safety related and designed to Seismic Category I requirements. The reactor pit cooling fans and internal filtration system components are non-safety related but designed to Seismic Category I requirements. All other components of the CBVS are non-safety related and Non-Seismic.

The CBVS components are located inside buildings that are designed to withstand the effects of natural phenomena such as earthquakes, tornados, hurricanes, floods, and external missiles (GDC 2).

~~Containment atmospheric cleanup is performed by internal filtration for the equipment compartment.~~ The containment low-flow purge exhaust subsystem~~s~~ removes radioactive materials via iodine filtration trains prior to release to the atmosphere (GDC 41). The filtration system~~s~~ ~~are~~is designed to allow periodic inspection (GDC 42).

The internal filtration subsystem filters airborne radioactive materials from the equipment compartments during normal operation.

The containment isolation valves are automatically closed within five seconds upon receipt of a containment isolation signal, in accordance with BTP 6-4 (Reference 8), to maintain the integrity of the containment boundary and to limit the potential release of radioactive material.

The reactor pit area temperature is maintained less than 150°F under postulated accident conditions to prevent concrete degradation.

The CBVS performs the following important non-safety-related system functions:

- Controls and maintains a negative pressure in the Containment Building when the CBVS purge subsystem is operating.

DRAFT

downstream of the filtration train. The air is drawn from the equipment compartments, filtered, and returned to the equipment compartments.

Radiation monitors are located upstream of the filtration trains for monitoring the radiation in the equipment compartments prior to filtration.

The system is designed in accordance with Reference 1 and RG 1.140.

Containment Building Cooling Subsystem

The containment building cooling subsystem (See Figure 9.4.7-4—Containment Building Cooling Subsystem) provides cool air into a concrete circular header located above the residual heat removal-safety injection room, and into the reactor pit cooling fan plenum. The containment building cooling subsystem provides cool air to the reactor coolant pumps, steam generators, chemical volume control system (CVCS), control rod drive mechanism system (CRDMS), and vent and drain system. There are two trains of two main fans and four cooling coils located in the equipment compartments. The cooling coils receive cold water from the operational chilled water system (OCWS).

Two trains of two reactor pit cooling fans located in the equipment compartments supply cool air to the reactor pit area. These fans are used to ventilate the reactor pit during normal and station blackout (SBO) conditions. The reactor pit is cooled by air from a plenum between the main fans and the reactor pit cooling fans. The supply air subsystem to the reactor pit is composed of a 16 duct layout around the main coolant piping.

The exhaust from these areas is recycled through the cooling coils located in the equipment compartments.

The system is designed in accordance with Reference 1.

Service Compartments Cooling Subsystem

09.04.03-1

The service compartment cooling subsystem (See Figure 9.4.7-5—Containment Building Service Compartments Cooling Subsystem) contains 12 recirculating cooling units. Each air cooling unit is equipped with a cooling coil connected to the OCWS. The recirculation cooling units provide ventilation and cooling for the service compartments. The service compartments include safety injection system valve rooms, steam generator blowdown system tank and heat exchanger rooms, instrument measuring cabinets and table rooms, and containment dome and annular space.

The system is designed in accordance with Reference 1.

DRAFT

9.4.9 Emergency Power Generating Building Ventilation System

The emergency power generating building ventilation system (EPGBVS) maintains acceptable ambient conditions and air renewals of the diesel hall, electrical room, and main tank room of each of the four divisions of the Emergency Power Generating Buildings (EPGB). Each division has its own independent heating, ventilation and air conditioning (HVAC) system which is not connected to other divisions. Two divisions are located in each of the two EPGBs.

9.4.9.1 Design Bases

The EPGBVS is safety related and designed to meet Seismic Category I requirements. The EPGBVS performs the following safety-related system function and complies with the general design criteria (GDC) indicated below:

- The EPGBVS maintains acceptable temperatures and air renewals in each of the four divisions to support the operation of the emergency diesel generators (EDG) and electrical control panels. The EDGs are required to provide onsite emergency power for the safety-related equipment to achieve and maintain the plant in a safe shutdown condition following a design basis accident, including loss of offsite power (LOOP).
- In accordance with GDC 2, the EPGBVS components are located inside the EPGBs, which are designed to withstand the effects of natural phenomena, such as earthquakes, tornados, hurricanes, floods and external missiles.
- In accordance with GDC 4, the EPGBVS components remain functional and continue to perform their intended safety function after anticipated operational occurrences and design basis accidents, such as fire, internal missiles, or pipe breaks.
- In accordance with GDC 5, the safety-related components and systems of the EPGBVS are not shared with other nuclear power units.

09.04.01-1

The quality group classification meets the guidance of RG 1.26. The seismic design of the system components adheres to the guidance of RG 1.29.

Air conditioning and heating loads for the EDG rooms are calculated using methodology identified in ASHRAE Handbook (Reference 8).

- Summer cooling loads will be calculated with a maximum outside air design temperature 0 percent exceedance value, using U.S. EPR Site Design Envelope Temperature (See Table 2.1-1). The analysis will be completed for both a normal and accident plant alignment configuration with EDG in operation.
- The cooling supply units are designed to provide outside air for cooling as required to prevent the EDG room temperatures from exceeding their maximum design temperature.

DRAFT

- Winter heating loads will be calculated with the plant operating in an outage alignment configuration, without diesel operation. Winter heat loads will be calculated with a minimum outside air design temperature 0 percent exceedance value, using U.S. EPR Site Design Envelope Temperature (See Table 2.1-1).

09.04.01-1

Though the EDGs are in standby mode during normal plant operation, the EPGBVS is available in any plant operating condition. With outside air ambient design temperature conditions of -40°F to 115°F, the EPGBVS is designed to meet the following safety-related functional criteria:

- Maintains the diesel hall temperature between 59°F and 140°F.
- Maintains the electrical room temperature between 59°F and 95°F with 35 to 70 percent relative humidity.
- Maintains the main tank room temperature between 59°F and 1240°F.

09.04.01-1

9.4.9.2 System Description

9.4.9.2.1 General Description

The EPGBVS ventilates the diesel generators using outside air as the cooling medium. Air is supplied into the building to slightly pressurize the building, and is then vented from the building through exhaust air louver openings.

The EPGBVS includes ventilation of diesel divisions 1 through 4. Divisions 1 and 2 are located inside the EPGB located on one side of the Reactor Building (RB), and divisions 3 and 4 are located inside the EPGB located on the opposite side of the RB. Each division has a separate and independent HVAC system. The HVAC systems for each of the four divisions are identical.

The air intake and exhaust stack of the EPGBVS are located such that exhaust gases being drawn into the air inlet stream are limited to an insignificant level. The exhaust stack is located approximately 70 feet from the air intake, and the exhaust air flow is directed away from the air intake flow.

One of the divisions of the EPGBVS is illustrated in Figure 9.4.9-1—Emergency Power Generating Building Ventilation System. The other three divisions are identical.

The EPGBVS consists of following subsystems for each division:

- Ventilation of diesel hall.
- Ventilation of electric room.
- Ventilation of main tank room.

DRAFT

9.4.9.4 Inspection and Testing Requirements

Refer to Section 14.2 (test abstract #084) for initial plant startup test program. Initial inplace acceptance testing of the EPGBVS components is performed in accordance with Reference 1 and Reference 3.

9.4.9.5 Instrumentation Requirements

Indication of the operational status of the equipment, position of dampers, instrument indications and alarms are provided in the MCR. Fans, motor-operated dampers, heaters and cooling units are operable from the MCR. Local instruments are provided to measure differential pressure across filters, flow, temperature and pressure. The fire detection and sensors information is delivered to the fire detection system.

9.4.9.6 References

1. ASME AG-1-2003, "Code on Nuclear Air and Gas Treatment," The American Society of Mechanical Engineers, 2003 (including the AG-1a, 2004 Addenda).

2. ANSI/ASHRAE Standard 52.2-1999, "Method of Testing General Ventilation Air-Cleaning Devices for Removal Efficiency by Particle Size," ANSI/American Society of Heating, Refrigerating and Air Conditioning Engineers, 1999.

3. ASME N510-1989 (R1995), "Testing of Nuclear Air-Treatment Systems," The American Society of Mechanical Engineers, 1989.

4. ANSI/AMCA-210-99, "Laboratory Methods of Testing Fans for Aerodynamic Performance Rating," American National Standards Institute/Air Movement and Control Association International, December 1999.

5. ANSI/AMCA-211-1987, "Certified Ratings Program–Air Performance," American National Standards Institute/Air Movement and Control Association International, 1987.

6. ANSI/AMCA-300-1985, "Reverberant Room Method of Testing Fans for Rating Purposes," American National Standards Institute/Air Movement and Control Association International, 1985.

09.04.01-1

7. UL 555, "Standard for Fire Dampers," Underwriter's Laboratories, Sixth Edition, June 1999.

8. "ASHRAE Handbook Fundamentals," American Society of Heating, Refrigeration and Air Conditioning Engineers, Inc., 2005.

DRAFT

Next File

09.04.01-1

Air conditioning and heating loads for the ESWS pump rooms are calculated using methodology identified in ASHRAE Handbook (Reference 8).

- Summer air conditioning loads will be calculated with a maximum outside air design temperature 0 percent exceedance value, using U.S. EPR Site Design Envelope Temperature (See Table 2.1-1). The analysis will be completed for both a normal and accident plant alignment configuration.
- The cooling supply units are designed to provide cooling as required to prevent the ESWS pump room temperatures from exceeding their maximum design temperature.
- Winter heating loads will be calculated with the plant operating in an outage alignment configuration. Winter heat loads will be calculated with a minimum outside air design temperature 0 percent exceedance value, using U.S. EPR Site Design Envelope Temperature (See Table 2.1-1).

9.4.11.2 System Description

9.4.11.2.1 General Description

A drawing of the ESWPBVS applicable to each of the four ESWS Pump Buildings is shown in Figure 9.4.11-1—Essential Service Water Pump Building Ventilation System.

The ESWPBVS supplies the recirculation air for cooling or heating of the ESWS pump area and electrical equipment area located inside each of the four ESWS Pump Buildings. Each building has its own independent ventilation system.

This ventilation system is not expected to contain or interface with any radioactive materials, and so is not considered an Engineered-Safety-Feature Atmospheric Clean-Up System.

Room air is drawn through an air inlet grill and processed through an air conditioning train. The conditioned air is supplied to the ESWS pump area and electrical equipment area. The room air is then returned to the air conditioning train. The air conditioning train for each building is comprised of the following components:

- Recirculation supply air ductwork.
- Cooling coils, which cool the recirculation air to the required supply air temperature. The cooling coils are supplied with water from the ESWS pump and the water is discharged into the respective cooling tower basin. Manual isolation valves are provided to isolate the cooling coils for maintenance.
- Moisture separator, which drains the condensate to the cooling tower basin.

DRAFT

9.4.11.6 References

1. NUREG-CR/0660, Boner, G.L. and Hanners, H.W., "Enhancement of Onsite Emergency Diesel Generator Reliability," University of Dayton Research Institute UDR-TR-79-07 for U.S. Nuclear Regulatory Commission, January 1979.

2. ASME AG-1-2003, "Code on Nuclear Air and Gas Treatment," The American Society of Mechanical Engineers, 2003 (including the AG-1a, 2004 Addenda).

3. ASME N510-1989 (R1995), "Testing of Nuclear Air-Treatment Systems," The American Society of Mechanical Engineers, 1989.

4. ANSI/AMCA-210-99, "Laboratory Methods of Testing Fans for Aerodynamic Performance Rating," American National Standards Institute/Air Movement and Control Association International, December 1999.

5. ANSI/AMCA-211-1987, "Certified Ratings Program–Air Performance," American National Standards Institute/Air Movement and Control Association International, 1987.

6. ANSI/AMCA-300-1985, "Reverberant Room Method of Testing Fans for Rating Purposes," American National Standards Institute/Air Movement and Control Association International, 1985.

7. ASME Boiler and Pressure Vessel Code, Section III, "Rules for Construction of Nuclear Facility Components," Class 3 Components, The American Society of Mechanical Engineers, 2004.

09.04.01-1

8. "ASHRAE Handbook Fundamentals," American Society of Heating, Refrigeration and Air Conditioning Engineers, Inc., 2005.

DRAFT

Next File