NUREG/IA-0239

International Agreement Report

Development of Horizontal Off-Take Model for Application to Reactor Headers of CANDU Type Reactors

Prepared by:
Yong Jin Cho, Seung-Hoon Ahn, In-Goo Kim/KINS

Gyoo Dong Jeon/HYU

Korea Institute of Nuclear Safety (KINS)
19 Gusung-dong, Yusong,gu
Daejeon, 305-338, Korea

Hanyang University
17 Haengdang-dong, Seongdong-gu
Seoul, 133-791, Korea

A. Calvo, NRC Project Manager

Office of Nuclear Regulatory Research
U.S. Nuclear Regulatory Commission
Washington, DC 20555-0001

June 2010

Prepared as part of
The Agreement on Research Participation and Technical Exchange
Under the Thermal-Hydraulic Code Applications and Maintenance Program (CAMP)

Published by
U.S. Nuclear Regulatory Commission

AVAILABILITY OF REFERENCE MATERIALS IN NRC PUBLICATIONS

NRC Reference Material

As of November 1999, you may electronically access NUREG-series publications and other NRC records at NRC's Public Electronic Reading Room at http://www.nrc.gov/reading-rm.html. Publicly released records include, to name a few, NUREG-series publications; *Federal Register* notices; applicant, licensee, and vendor documents and correspondence; NRC correspondence and internal memoranda; bulletins and information notices; inspection and investigative reports; licensee event reports; and Commission papers and their attachments.

NRC publications in the NUREG series, NRC regulations, and *Title 10, Energy*, in the Code of *Federal Regulations* may also be purchased from one of these two sources.

1. The Superintendent of Documents
   U.S. Government Printing Office
   Mail Stop SSOP
   Washington, DC 20402–0001
   Internet: bookstore.gpo.gov
   Telephone: 202-512-1800
   Fax: 202-512-2250
2. The National Technical Information Service
   Springfield, VA 22161–0002
   www.ntis.gov
   1–800–553–6847 or, locally, 703–605–6000

A single copy of each NRC draft report for comment is available free, to the extent of supply, upon written request as follows:

Address: U.S. Nuclear Regulatory Commission
Office of Administration
Reproduction and Mail Services Branch
Washington, DC 20555-0001
E-mail: DISTRIBUTION@nrc.gov
Facsimile: 301–415–2289

Some publications in the NUREG series that are posted at NRC's Web site address http://www.nrc.gov/reading-rm/doc-collections/nuregs are updated periodically and may differ from the last printed version. Although references to material found on a Web site bear the date the material was accessed, the material available on the date cited may subsequently be removed from the site.

Non-NRC Reference Material

Documents available from public and special technical libraries include all open literature items, such as books, journal articles, and transactions, *Federal Register* notices, Federal and State legislation, and congressional reports. Such documents as theses, dissertations, foreign reports and translations, and non-NRC conference proceedings may be purchased from their sponsoring organization.

Copies of industry codes and standards used in a substantive manner in the NRC regulatory process are maintained at—

The NRC Technical Library
Two White Flint North
11545 Rockville Pike
Rockville, MD 20852–2738

These standards are available in the library for reference use by the public. Codes and standards are usually copyrighted and may be purchased from the originating organization or, if they are American National Standards, from—

American National Standards Institute
11 West 42nd Street
New York, NY 10036–8002
www.ansi.org
212–642–4900

Legally binding regulatory requirements are stated only in laws; NRC regulations; licenses, including technical specifications; or orders, not in NUREG-series publications. The views expressed in contractor-prepared publications in this series are not necessarily those of the NRC.

The NUREG series comprises (1) technical and administrative reports and books prepared by the staff (NUREG–XXXX) or agency contractors (NUREG/CR–XXXX), (2) proceedings of conferences (NUREG/CP–XXXX), (3) reports resulting from international agreements (NUREG/IA–XXXX), (4) brochures (NUREG/BR–XXXX), and (5) compilations of legal decisions and orders of the Commission and Atomic and Safety Licensing Boards and of Directors' decisions under Section 2.206 of NRC's regulations (NUREG–0750).

DISCLAIMER: This report was prepared under an international cooperative agreement for the exchange of technical information. Neither the U.S. Government nor any agency thereof, nor any employee, makes any warranty, expressed or implied, or assumes any legal liability or responsibility for any third party's use, or the results of such use, of any information, apparatus, product or process disclosed in this publication, or represents that its use by such third party would not infringe privately owned rights.

NUREG/IA-0239

International Agreement Report

Development of Horizontal Off-Take Model for Application to Reactor Headers of CANDU Type Reactors

Prepared by:
Yong Jin Cho, Seung-Hoon Ahn, In-Goo Kim/KINS

Gyoo Dong Jeon/HYU

Korea Institute of Nuclear Safety (KINS)
19 Gusung-dong, Yusong,gu
Daejeon, 305-338, Korea

Hanyang University
17 Haengdang-dong, Seongdong-gu
Seoul, 133-791, Korea

A. Calvo, NRC Project Manager

Office of Nuclear Regulatory Research
U.S. Nuclear Regulatory Commission
Washington, DC 20555-0001

June 2010

Prepared as part of
The Agreement on Research Participation and Technical Exchange
Under the Thermal-Hydraulic Code Applications and Maintenance Program (CAMP)

Published by
U.S. Nuclear Regulatory Commission

ABSTRACT

In the CANDU accident analysis the header is one of the important components to be well modeled, because it has great impact on the fuel channel behavior during some accidents. The feeder void fraction, affected by thermal-hydraulic behavior in the headers, may affect the fuel bundle coolability. The liquid entrainment and vapor pull-through (off-take) phenomena in the header are considered highly important, in case where horizontal stratification is achieved inside the header.

To generalize the model for application to various branch angles, a critical height correlation was reconstructed by using the point skin method, and then the constants were determined so the correlation can fit well with the previous large number of experimental data. The new model considers the effects of different branch angles on the off-take, and tested against the experimental data of various branch angles in a Separate Effect Test (SET).

The verification analysis results in a conceptual blowdown problem showed that the new model gives better accuracy than the original. The new model also provided an enhancement in prediction of the experimental data selected for validation.

FOREWORD

RELAP5 is one of the best-estimate thermal-hydraulic system codes to date. It was developed by United States Nuclear Regulatory Commission (USNRC) and its latest version, RELAP5/MOD3.3 (patch 03) was released in 2006. Though USNRC has been moving most of their developmental efforts from RELAP5 to TRACE, the RELAP5 code is still widely applied to analyses of various transients in Light Water Reactors (LWRs), including the postulated large break loss-of-coolant accident (LBLOCA).

In Korea, four CANDU (CANada Deuterium Uranium)-type heavy water reactors are in operation, which have design peculiarities, especially the reactor core composed of many small separated horizontal fuel channels and the moderator separated from the coolant. For purpose of a regulatory auditing calculation, the RELAP5 code has been adapted to the CANDU reactor design by model modifications and developments. As part of such an effort, an effort was made to generalize the RELAP5 off-take model to various angled branches. This report is to extend the previous study by developing the new off-take model in angled branch line configurations of a large pipe, applicable to the header of the CANDU reactor.

The authors acknowledge the financial support of the National Research Foundation under the national mid- and long-term nuclear research and development program of the Ministry of Education, Science and Technology of the Republic of Korea.

CONTENTS

Page

Abstract iii
Foreword v
Executive Summary ix
Nomenclatures xi

1. Introduction 1-1
2. Model Review 2-1
   2.1 RELAP5 Model 2-1
   2.2 State of the art 2-2
3. Theoretical Analysis 3-1
   3.1 Theoretical Analysis 3-1
   3.2 Experimental Assessment 3-3
   3.3 Model Verification and Validation 3-6
4. Conclusions 4-1
5. References 5-1

Appendices

A Description of Canadian Experimental Facility used in SET Validation A-1

B Lists of Subprogram Changes B-1

C Input deck for Model Verification C-1

D Input deck for Model Validation D-1

List of Figures

Figure *Page*

1. Conceptual Sketches for Liquid and Vapor Pull-Through Model 1-1
2. Schematic Drawing for Theoretical Approach 3-1
3. Angled Branch Correlation Comparison 3-5
4. Vertical Downward Branch Correlation Comparison 3-5
5. Vertical Upward Branch Correlation Comparison 3-6
6. Modeling for New Model Verification (90°~-90°) 3-7
7. Upstream Pressure Behavior for Verification 3-7
8. Branch Line Liquid Fraction Results for Verification 3-8
9. Branch Line Mass Flowrate Results for Verification 3-8
10. Modeling for New Model Validation 3-9
11. New Model Validation for -45° branch line 3-10
12. New Model Validation for 0° branch line 3-10
13. New Model Validation for -90° branch line 3-11

List of Tables

Table **Page**

1. Experimental Data used to determining correlation constants 3-3
2. Constants of Critical Height Correlation by Nonlinear Fitting Methods 3-4

Executive Summary

The header of CANDU nuclear power plant is the important component to simulate the fuel channel behavior because the headers' hydraulic behavior controls the feeder void fraction which affects on the fuel bundle coolability. In CANDU accident analyses, the liquid entrainment and vapor pull-through (off-take) phenomena should be considered when horizontal stratification achieved inside the header. The current RELAP5 off-take model can treat only 3 directions; vertical upward, downward, and side oriented junctions. The onset of liquid entrainment and vapor pull-through model, represented by the critical height were studied in the angled branch line configurations in a large pipe.

In the CANDU accident analysis the header is one of the important components to consider when simulating the fuel channel behavior. The hydraulic behavior in the header controls the feeder void fraction which may affect the fuel bundle coolability. The liquid entrainment and vapor pull-through model (off-take model) becomes strongly influences the coolant flow of 95 feeders connected to the reactor header component where the horizontal stratification may occur [6]. The current RELAP5 includes the off-take models only for the junctions of three angles, vertically upward and downward, and side oriented, and thus an improvement was needed to model the exact angles for simulation the branch lines from the CANDU header.

The new model was applied to RELAP5/MOD3. For verification, conceptual problem calculations have been performed for a conceptual blowdown problem with different connection angles of branch in a horizontal pipe. The calculated void fraction and mass flow rate of different location of branches shows the validity of implemented model. As validation, the Canadian experiment was adopted and this experiment was performed in a horizontal pipe with a branch and different orientations using air-water mixture. The data for the angles of zero, -45 and -90 degrees were selected among many data sets. The modified RELAP5 with new model gave improved results for the horizontal and vertical downward and angled branch line.

Nomenclatures

C_1, C_2, C_3 : Coefficients
d : Diameter of branch, (meter)
D : Upstream Pipe Diameter (meter)
g : Gravitational Force (m/sec^2)
h : Height (meter)
$\dot{m}$: Mass Flow Rate (kg/sec)
n : Strength of Point Sink (m^3/sec)
P : Pressure (Pascal)
s : Distance
V : Velocity (m/sec)
x, y, z : Cartesian Coordinates (meter)

Greek Letters

α : Void Fraction
θ : Inclination Angle
ρ : Density (kg/m^3)
$\Delta\rho$: Density Differences (kg/m^3)
ϕ : Potential Function (m^2/sec)

Subscripts

b : Critical Height, usually used as h_b
B : Edge Point of Heavier Fluid Level
BGE : Beginning of Gas Entrainment
BLE : Beginning of Liquid Entrainment
L : Liquid Phase
G : Gas Phase

1. INTRODUCTION

In many industrial applications, especially those in nuclear power plant, two-phase flow discharging from a stratified region through a branch need to be examined [1]. Examples include the flow through a small break in a horizontal channel of a nuclear power plant during loss of coolant accident, the flow distribution in CANDU header-feeder system [2] during accident scenarios, and two-phase distribution headers in general, where a certain incoming stream fed into a large header is divided among a number of discharging streams.

The liquid entrainment and vapor pull-through model (off-take model) becomes strongly influences the coolant flow of 95 feeders connected to the reactor header component where the horizontal stratification may occur [3]. Studies of two-phase flow through small branches in horizontal pipes under stratified flow conditions have gained importance due to their relevance to many engineering applications. In the field of nuclear safety, the loss of coolant accident (LOCA) caused by a small break in a horizontal pipe is of great importance. During such a LOCA, a stratified flow may occur in the horizontal pipe, which strongly influences the mass flow rate through the break. The flow characteristics in an off-take phenomenon are shown in Fig. 1. The current RELAP5 model is able to treat only vertically upward, downward, and side oriented junctions, and thus improvements for the off-take model was needed for modeling the exact angles [4].

In this study, a base formulation for a new model was developed based on a point-sink method to consider the feeder pipe angle and the new models for vertical upward, downward and angled branch were developed and the verification/validation were performed using separate effect test data.

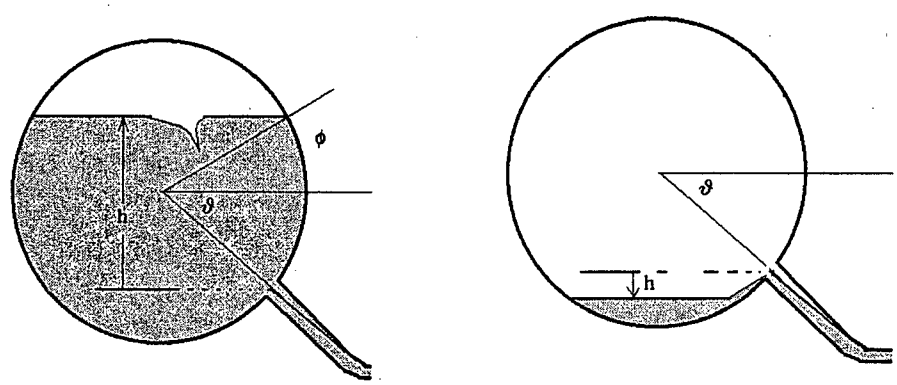

Figure 1 Conceptual Sketches for Liquid and Vapor Pull-Through Model

2. MODEL REVIEW

2.1 RELAP5 Model

RELAP5/MOD3 horizontal stratification entrainment/pull-through model [4] accounts for phase separation phenomena and computes the flux of mass and energy through an off-take attached to a horizontal pipe. When stratification occurs in a large horizontal pipe, the quality of a branch line can be calculated by "upward off-take," "downward off-take," and "horizontal off-take" models according to connection angle between a large horizontal and branch pipes. These models were developed from experimental studies where the inception height on liquid entrainment and vapor pull-through were measured.

The inception height, h_b, associated with the onset of liquid entrainment or vapor pull-through is represented as follows [4].

$$h_b = \frac{CW_k^{0.4}}{\left[g\rho_k\left(\rho_f - \rho_g\right)\right]^{0.2}}, \tag{1}$$

Where the subscript k represents the phase properties of a continuum flowing in a branch pipe before the onset of liquid entrainment or vapor pull-through. For example, k represents liquid properties for downward oriented off-take. W is the flow rate of a continuum. C is a coefficient determined by experiments.

$$C = \begin{cases} 1.67 & \text{for upward off-take liquid entrianmen t} \\ 1.50 & \text{for downward off-take gas pull-through} \\ 0.75 & \text{for horizontal off-take gas pull-through} \\ 0.75 & \text{for horizontal off-take liquid entrianmen t} \end{cases} \tag{2}$$

The correlations used for calculation of flow quality, X, at the branch entrance with off-take are dependent on the connection angle between a large horizontal and branch pipes, and represented as follows;

$$X = \begin{cases} R^{3.25(1-R)} & \text{for an upward off-take branch} \\ X_o^{2.5R}\left[1 - 0.5R(1+R)X_o^{(1-R)}\right]^{0.5} & \text{for a downward off-take branch} \\ X_o^{(1+CR)}\left[1 - 0.5R(1+R)X_o^{(1-R)}\right]^{0.5} & \text{for a horizontal off-take branch} \end{cases}, \tag{3}$$

where, $R = \dfrac{h}{h_b}$, $X_o = \dfrac{1.15}{1 + \left(\rho_f / \rho_g\right)^{0.5}}$

h = distance from the stratified liquid level to junction

$$C = \begin{cases} 1.09 \ \textit{for gas pull-through} \\ 1.00 \ \textit{for liquid-entrainment} \end{cases}$$

2.2 State of the art

In the field of nuclear safety, the loss of coolant accident (LOCA) caused by a small break in a horizontal pipe is of great importance. During such a LOCA, a stratified flow may occur in the horizontal pipe, which severely influences the mass flowrate through the break. Generally, break is simulated by T-junctions with small ratio d/D of branch to main pipe diameter. However the investigation was concentrated on flow and geometrical parameters quite different from those applying to the situations of interest in nuclear reactors. These situations were described by Zuber [1]. If a break is located above horizontal interface, liquid from the interface can be entrained due to the pressure drop produced by the vapor acceleration in the vicinity of the break (Bernoulli effect). Similarly, with a break located below the interface, vapor can reach the break due to vortex formation or can be pulled through in the vortex-free flow.

The importance of two-phase flow through small branches in horizontal pipes under stratified-flow conditions has motivated significant research, conducted mostly during the past twenty years. Smoglie and Reimann [5] performed experiments using stratified air-water flow at 200 to 500 kPa in a horizontal pipe (20.6cm in diameter) with different branch sizes (d=6,8,12 and 20 mm) and different orientations (top, bottom and side) for each branch. The branches were simulated by pipe stubs (0.055m in length) with sharp-edged entrances and the flow through the branch was controlled by throttle valve. These results indicated an insignificant effect of the branch size on the onsets of gas and liquid entrainment.

Correlations were developed by Smoglie and Reimann [5] based on their experimental data to predict the onsets of entrainment and quality of discharge. For the side and bottom orientation cases the critical heights corresponding to the onset or beginning of gas entrainment (BGE) and beginning of liquid entrainment were given in terms of Froude number as follows;

For side orientation case

$$\frac{h_{BGE}}{d} = 0.681 Fr_{BGE}^{0.4} \tag{4}$$

$$\frac{|h_{BLE}|}{d} = 0.626 Fr_{BLE}^{0.4} \tag{5}$$

For bottom orientation case

$$\begin{aligned} \frac{h_{BGE}}{d} &= 1.816 Fr_{BGE}^{0.4} \quad \textit{for vortex flow} \\ &= 0.626 Fr_{BGE}^{0.4} \quad \textit{for vortex-free flow} \end{aligned} \tag{6}$$

with $Fr_{BGE} = \dfrac{4\dot{m}_{L,BGE}}{\pi\sqrt{gd^5\rho_L(\rho_L-\rho_g)}}$, $\quad Fr_{BLE} = \dfrac{4\dot{m}_{G,BLE}}{\pi\sqrt{gd^5\rho_G(\rho_L-\rho_g)}}$

where h is the vertical distance between the water surface and the centerline of the branch (positive in the upward direction ρ_g is the density of the gas, ρ_L is the density of liquid, g is the gravitational acceleration and $\dot{m}$ is the mass flow rate at the onset.

The quality of discharge was correlated for the region $h_{BLE} \le h \le h_{BGE}$ ($h_{BLE} = 0$, for the bottom break). For the side branch, it was given by

$$X = r^{\left(1.0+c\frac{h}{h_b}\right)}\left[1.0-0.5\left(\frac{h}{h_b}\right)\left(1.0+\frac{h}{h_b}\right)r^{\left(1.0+c\frac{h}{h_b}\right)}\right]^{0.5} \tag{7}$$

with $r = \dfrac{1.15}{1.0+\sqrt{\dfrac{\rho_L}{\rho_G}}}$

where c=1.09, $h_b = h_{BGE}$ where h>0, and c=1.00, $h_b = |h_{BLE}|$ when h<0.

For the bottom branch, the quality was given by

$$X = r^{(2.5h/h_{BGE})}\left[1.0-0.5\left(\frac{h}{h_{BGE}}\right)\left(1.0+\frac{h}{h_{BGE}}\right)r^{\left(1.0-c\frac{h}{h_{BGE}}\right)}\right]^{0.5} \tag{8}$$

Schrock et al. [6] performed experiments using both air-water and steam-water as the working fluid. The experiments were performed at system pressure up to 1.07 Mpa in a horizontal pipe (10.2cm in diameter) with different branch sizes (d=4, 6, and 10mm) and different orientations for each branch. The branches were simulated by 123 mm in length. Viewing windows were placed at the branch section and in the pipe just upstream and downstream of the branch to allow visual observation of the flow phenomena. They concluded that the BGE (side and bottom orientations) was affected by surface tension and viscosity in addition to Froude number. The BGE data for the side orientation did not agree with the data of Smoglie and Reimann [5]. No explanation was given for the disagreement. Their data on discharge quality, together with data from other studies were correlated in terms of normalized interface level. The correlations for h_{BGE}, h_{BLE} and X of the side branches were given by

$$\frac{h_{BGE}}{d} = \sqrt{\frac{\sigma}{gd^2\Delta\rho}}\left(\frac{1}{40.6}Fr_{BGE}Bo^2N_\mu^{-0.5}\right)^{0.476}$$

$$\frac{|h_{BLE}|}{d} = 0.624\ Fr_{BLE}^{-0.4} \tag{9}$$

and

$$X = 0.06^{\left(1.0+\frac{h}{h_b}\right)^{0.7}}\left[1.0-c\left(\frac{h}{h_b}\right)\left(1.0+\frac{h}{h_b}\right)\right] \tag{10}$$

with $Bo = d\sqrt{\dfrac{g\Delta\rho}{\sigma}}$ and $N_\mu = \dfrac{\mu_L(g\Delta\rho)^{0.25}}{\sigma^{0.75}\rho_L^{0.5}}$

where Bo is the Bond number, σ is the surface tension, $\Delta\rho$ is the density difference between the phases, μ_L is the liquid viscosity, (c=0.5, $h_b = h_{BGE}$ when h>0, and

c=0, $h_b = |h_{BLE}|$ when h<0). For bottom branches, h_{BGE} and X were given by

$$\frac{h_{BGE}}{d} = \sqrt{\frac{\sigma}{gd^2\Delta\rho}}\left(\frac{1}{19.4}Fr_{BGE}Bo^2N_{\mu}^{-0.5}\right)^{0.454} \tag{11}$$

and

$$X = \left[1.0-\left(\frac{h}{h_{BGE}}\right)^2\right]^{3.5}\exp\left[-3.1\left(\frac{h}{h_{BGE}}\right)\right] \tag{12}$$

Yonomoto and Tasaka [7] developed a simple analytical model to study two-phase-flow through small branches. Air-water experiments at a maximum pressure of 700kPa were also conducted. A horizontal, square duct (19cm×19cm) was used in the experiments instead of a round pipe. The branch was simulated by a sharp-edged junction (d=10 and 20 mm). The characterization of BGE and BLE was determined by visual observation. Their model defined a two-phase interface profile having a conical sharp near the branch. Therefore, the mass flow rate and quality of the two-phase discharge through the branch were expressed as a function of void fraction α, defined as a ratio of gas flow area to total flow area in this conical region.

$$\dot{m}_{TP} = \alpha\dot{m}_{G,BGE} + (1.0-\alpha)\dot{m}_{L,BGE} \tag{13}$$

and $$X = \frac{\alpha\dot{m}_{G,BGE}}{\dot{m}_{TP}} \tag{14}$$

The void fraction α for the side branch was given by

$$\alpha = (1.0-a_\alpha)\left(\frac{h}{h_{BLE}}\right)+a_\alpha \quad \text{for h < 0} \tag{15}$$

and

$$\alpha = -a_\alpha\left(\frac{h}{h_{BGE}}\right)+a_\alpha \quad \text{for h > 0} \tag{16}$$

where $$a_\alpha = \frac{1.0}{1.0+\left(\frac{\dot{m}_{G,BLE}}{\dot{m}_{L,BGE}}\right)\sqrt{\frac{\rho_L}{\rho_G}}}$$

$$\frac{h_{BGE}}{d} = 0.682Fr_{BGE}^{0.4} \quad \text{and} \quad \frac{|h_{BLE}|}{d} = 0.558Fr_{BLE}^{0.4} \tag{17}$$

For the bottom branch, α was given by

$$\begin{aligned} \alpha &= 0.9b_\alpha && for\ 0 \le b_\alpha \le 0.6 \\ \alpha &= 1.15b_\alpha - 0.15 && for\ 0.6 \le b_\alpha \le 1.0 \end{aligned}, \tag{18}$$

where $b_\alpha = 1.0 - \left[c_\alpha + \left(c_\alpha^{\,2} + \frac{\dot{m}_{G,BLE}}{\dot{m}_{L,BGE}} \sqrt{\frac{\rho_L}{\rho_G}} \left(\frac{h}{h_{BGE}} \right)^{2.5} \right)^{0.5} \right]$,

with $c_\alpha = 0.5 \left(1.0 - \frac{\dot{m}_{G,BLE}}{\dot{m}_{L,BGE}} \sqrt{\frac{\rho_L}{\rho_G}} \right) \left(\frac{h}{h_{BGE}} \right)^{2.5}$ and $\frac{h_{BGE}}{d} = 0.909 Fr_{BGE}^{0.4}$.

Good agreement was obtained between their model and their experimental data for discharge quality on the liquid-entrainment side (h < 0) and an empirical correction factor was incorporated in the model on the gas entrainment side (h > 0). A modified mathematical model was developed later by Yonomoto and Tasaka [8] which improved the agreement with the experimental data.

Micaelli and Memponteil[9] performed experiments using steam-water mixtures. A wide range of parameters was covered (system pressure of 2 to 7 MPa, main pipe diameters of 80 and 135 mm and branch diameters of 12 and 20 mm). The correlations for the BGE and BLE were based on their experimental data as well as those of Smoglie and Reimann [5] and Schroch et al. [6]. A semi-empirical correlation was developed for the branch quality based on simple theoretical approaches adjusted by their own experimental data as well as other experimental data in the literature.

In their final correlation, the quality x for the side-branch case was given as a function of void fraction α at the branch inlet over the whole range $h_{BLE} < h < h_{BGE}$ as follows:

$$x = \frac{\alpha}{\alpha + \sqrt{\frac{\rho_L}{\rho_G}} (1.0 - \alpha)} \tag{19}$$

where $x = 1.0 - 0.5 \left(1.0 + \frac{h}{h_b^*} \right)^2$ for $h < 0$

and $x = 0.5 \left(1.0 - \frac{h}{h_b^*} \right)^2$ for $h > 0$

with $h_b^* = 0.69 \left[\frac{\dot{m}_{TP}^2}{g \rho_m (\rho_L - \rho_G)} \right]^{0.2}$

and ρ_m is the homogeneous density given by $\rho_m = \left[\frac{x}{\rho_G} - \frac{(1.0 - x)}{\rho_L} \right]^{-1}$

For the bottom branch, X was also corrected by the equation of X with α given by

$$\alpha = 1.0 - \frac{h}{h_{BGE}} \tag{20}$$

and $h_{BGE} = \left[1.0 - \left(\frac{V_L^*}{V_d}\right)^{0.4}\right]\left[\frac{\dot{m}_{L,BGE}^2}{g\rho_L(\rho_L - \rho_G)}\right]^{0.2}$ (21)

where V_d and V_d^* are the mean liquid velocities in the branch and in the main pipe(downstream from the branch), respectively.

3. THEORETICAL ANALYSIS

3.1 Theoretical Analysis

The phenomena identified in the previous section can have a strong influence on discharge flow through branches. For these phenomena, a few theoretical formulae were reported recently to predict two phenomena, the discharge flow rate and quality [10, 11]. The phenomena are based on the two-phase flow, vapor and liquid phase. The simplified theoretical approach neglects the effects of viscosity and surface tension, assumed potential flow throughout the field and treated the branch as a point sink.

The configuration under consideration in the present analysis is shown in Figure 2. Stratified layers of immiscible fluids with density ρ and $\rho + \Delta\rho$ are contained in large reservoir whose wall is inclined at an angle θ from vertical. Discharge is induced from the lighter fluid through the branch with mass flowrate $\dot{m}$. The purpose of the analysis is to predict the critical height h at which the heavier fluid starts flowing into the branch.

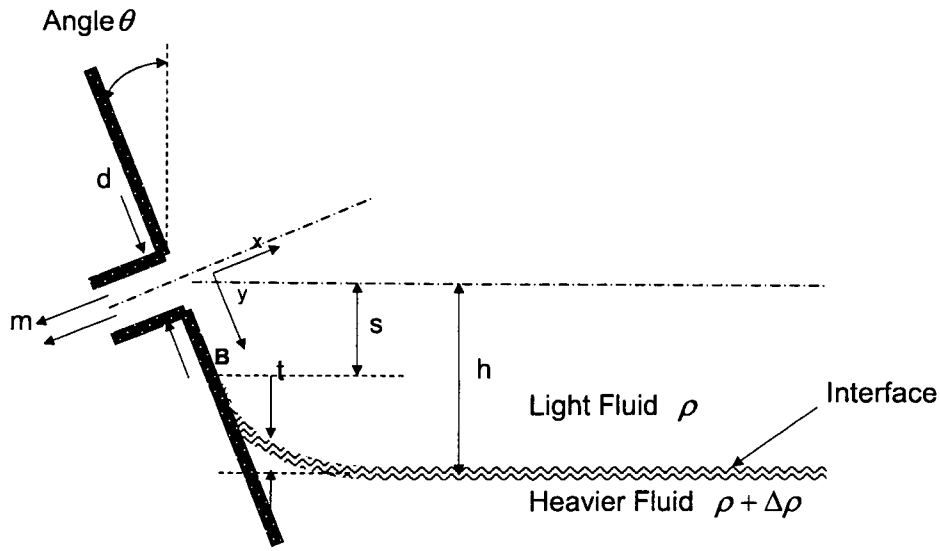

Figure 2 Schematic Drawing for Theoretical Approach

The point B is a linking point between the wall and the heavier fluid pulled by surface tension, and s is the distance from the elevation of B to the elevation of the point of contact between the centerlines of inner edges in the header outlet and the branch line. The present analysis assumes that the dominant forces are the inertia and gravity forces and the effect of viscosity and surface tension are negligible. Both fluids are assumed to be incompressible and steady-state potential flow is assumed in the lighter fluid, while the heavier fluid is stagnant. The present analysis follows Craya's [12] approach, applied successfully by Armstrong et al. [13], and Hassan et al. [14] where equilibrium of interface and the velocity field in the lighter fluid are determined first and then equality of the velocity and its gradient at linking point B (see Figure 2) are later imposed as conditions for the onset of liquid entrainment.

The equilibrium condition is assumed at interface between light and heavy fluid. Applying Bernoulli equation on a stream line coincident with the interface from the side of the lighter fluid, the following equation can be introduced:

$$P+\frac{\rho V^2}{2}+\rho g t=C \tag{22}$$

where C is an arbitrary constant, V is fluid velocity, g is gravitational constant, ρ is density, P is pressure and t is distance between the liquid level and the liquid/wall contact point. Along the same streamline from the side of the heavier fluid, the Bernoulli equation gives:

$$P+(\rho+\Delta\rho)gt=C \tag{23}$$

Subtracting Eqn. (23) from Eq. (22), we get:

$$\frac{V^2}{2}=\frac{\Delta\rho}{\rho}gt \tag{24}$$

If we consider branch line point corresponding to the location on the interface where $t=h-s$, Eqn. (24) gives:

$$\frac{V_B^{\,2}}{2}=\frac{\Delta\rho}{\rho}g(h-s) \tag{25}$$

If we define *n* as a strength, the relation between *n* and $\dot{m}$ are;

$$n=\frac{\dot{m}}{2\pi\rho} \tag{26}$$

In developing the velocity field in the lighter fluid, the presence of heavier stationary fluid is ignored. Therefore, the fluid field is treated as a semi-infinite medium extending over $0\le x\le\infty$, $-\infty\le y\le\infty$, and $-\infty\le z\le\infty$. The three dimensional flow is symmetric around the *x-y* plane which passes through the sink. Therefore, some analogy exists with the case of two-dimensional flow, thereby allowing the introduction of stream function and a velocity potential. Following Milne-Thomson [15], the potential function in the *x-y* plane, which is perpendicular to the reservoir wall, is given by :

$$\phi=-\frac{n}{r} \tag{27}$$

where r is the radial distance from the sink.

The radial velocity V_r at any point in the x-y plane can be obtained as:

$$V_r=-\frac{\partial\phi}{\partial r}=-\frac{n}{r^2} \tag{28}$$

At front point of liquid surface, the velocity V_B corresponds to $r=s/\cos\theta$ is;

$$\frac{V_B^{\,2}}{2}=\frac{1}{2}\left[\frac{n}{(s/\cos\theta)^2}\right]^2 \tag{29}$$

Now, two expressions for $V_B^2/2$ given by (25) and (29) are introduced. In order to get critical height, we combine two equations, (25) and (29) with Eqn.(26) as follows;

$$\frac{\rho}{\Delta\rho}g(h-s)=\frac{1}{2}\left[\frac{n}{(s/\cos\theta)^2}\right]^2 \tag{30}$$

After differentiating the both sides of the above equation with respect to s and rearranging each term, the distance s in Figure 2 is obtained as follows.

$$s = \left(\frac{2n^2 \rho \cos^4 \theta}{\Delta \rho g} \right)^{\frac{1}{5}} \tag{31}$$

The parameters of this equation are composed by physical parameters. Thus this equation introduce in Eqn. (30) and with some manipulation, we can get the critical height h:

$$h = C_1 \left[\frac{\dot{m}}{\sqrt{g \rho \Delta \rho}} (\cos \theta)^2 \right]^{0.4} \tag{32}$$

3.2 Experimental Assessments

Eqn. (32) indicates that for single discharge with fixed flow rate and fluid properties, h varies with wall inclination θ according to $\cos\theta$. The exponent of $\cos\theta$ was regarded as an unknown constant that should be determined by experiment and be compared with large number of experimental data.

The experimental data were gathered from Smoglie and Reimann [5], Schrock et al. [6], Ibrahim G.Hassan et al. [14], J. L. Anderson et al.[16], and T.S.Andreychek, et al [17]. Over 500 effective data points including vertical upward, vertical downward, horizontal side and angled branch with downward angle (θ=0°, 45 °, 60 °) were produced. The detailed experimental parameters are shown in Table 1.

Table 1 Experimental Data used to determining correlation constants

Experimental Conditions	Smoglie/ Reimann [5]	Schrock et al.[6]	Hassan et al. [14]	Anderson et al. [16]	Andreychek et al. [17]
1. Tank/Branch					
- Angle	90°, 0°, -90°	0°, -90°	0°, 45°, 90°	0°, 90°	0°, 45°, 60°, 90°
- Size(mm)	0.6, 0.8, 1.2	0.375, 0.396, 0.632	0.635	0.81	31.75, 57.15, 69.85
- d/D	0.029~0.097	0.021~0.03	0.0228	0.034~0.052	0.12,0.17,0.32
2. T/H condition					
- Pressure(MPa)	0.2~0.5	0.109~0.913	0.316, 0.517	3.45, 4.4, 6.2	0.1
- Temperature(°C)	20	20~Saturation	20	Saturation	20
3. Simulant	Air/Water	Air/Water Steam/Water	Air/Water	Steam/Water	Air/Water
4. No.of Data/used	264	174	6	9	50

The ratio of correlation and experimental results according to the diameter ratio were investigated. Due to the lack of experimental results for angled branch, the results from T.S.Andreychek, et al. [17] were used, but this experiment could be characterized by large diameter ratio between branch line and main horizontal pipe. In previous section, the point sink was assumed and the point sink means that the sink has no area. Because the experimental

data with large diameter ratio should be used, the non-dimensional compensation factor should be needed and considered in the model and defined as follows;

$$R_d = d / D, \tag{33}$$

where d is branch line diameter, and D is main line pipe diameter.

Through these evaluations, the basic correlation form had been determined, based on the previous analysis, as follows;

$$\begin{aligned} h_b &= C_1 (\cos\theta)^{C_2} (R_d)^{C_3} h \\ &= C_1 (\cos\theta)^{C_2} (R_d)^{C_3} \left[\frac{\dot{m}_k}{\sqrt{g \rho_k \Delta\rho}} \right]^{0.4} \end{aligned} \tag{34}$$

where C_1, C_2, C_3 are constants, h is introduced from Eqn. (34) and subscript k represent the continuous phase.

To get the constants, C_1, C_2, C_3 in Eqn. (34), a statistical methodology was used. In this study, all statistical analysis was performed using the commercial program, SAS 6.12 (Statistical Analysis System) for windows [18]. Above all, the correlation among variables was analyzed by procedure CORR in SAS 6.12, using various correlation coefficient. The results of procedure CORR showed that the critical height, h was strongly correlated with the cosine term, the area ratio, and main form of Eqn. (34) because Pearson correlation coefficients of those parameters are relatively larger than other parameters in CORR analysis results.

Next step is the nonlinear regression analysis and the procedure, NLIN in SAS 6.12, was utilized. The procedure NLIN can analyze the nonlinear regression analysis using nonlinear least-square method. In this procedure, the all options in NLIN were studied for sensitivity analysis and the differences among their results were found to be negligible. The studied options were the Newton, modified Gauss-Newton, and DUD method.

The experimental results were divided into three groups, vertical upward, vertical downward, and other angles including side branch (0o). For each of the three groups, the above procedures were applied. The resulting coefficients C_1, C_2 and C_3 in Eqn. (34) are listed in Table 2.

Table 2 Constants of Critical Height Correlation by Nonlinear Fitting Methods

Constants	Upward Orientation	Downward Orientation	Angled Orientation
C_1	0.5146	0.8286	0.3416
C_2	0.	0.	-0.34
C_3	-0.24198	-0.07012	-0.115

Figure 3 shows that the RELAP5 [4] correlation results could not predict the critical height at angled branch line but the new model could predict the experimental results with reasonable accuracy. The critical height value of zero calculated by RELAP5 indicates RELAP5 can not treat the angled branches. Also, the new model shows to give more accurate results than those of RELAP5 for all cases. For the case of vertical upward and downward cases, the results were shown in Figures 4 and 5. The Figures also show that new model can better predict compared with that of RELAP5.

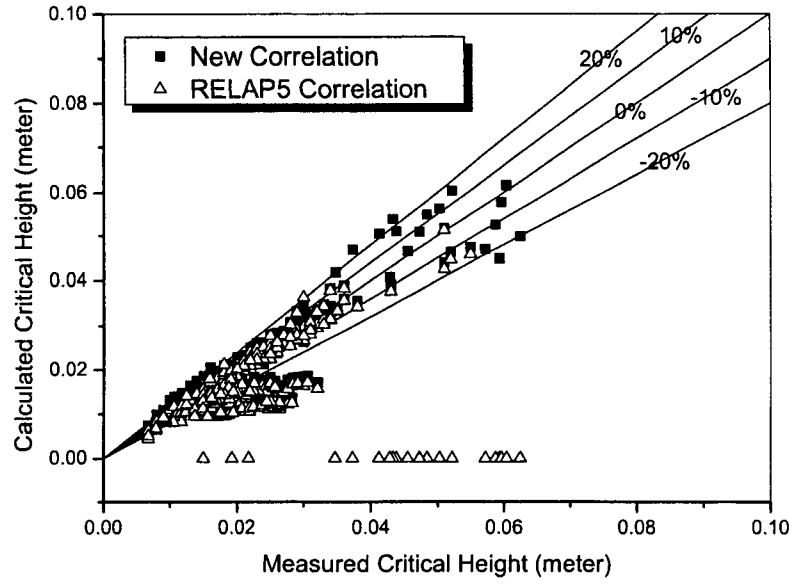

Figure 3 Angled Branch Correlation Comparison

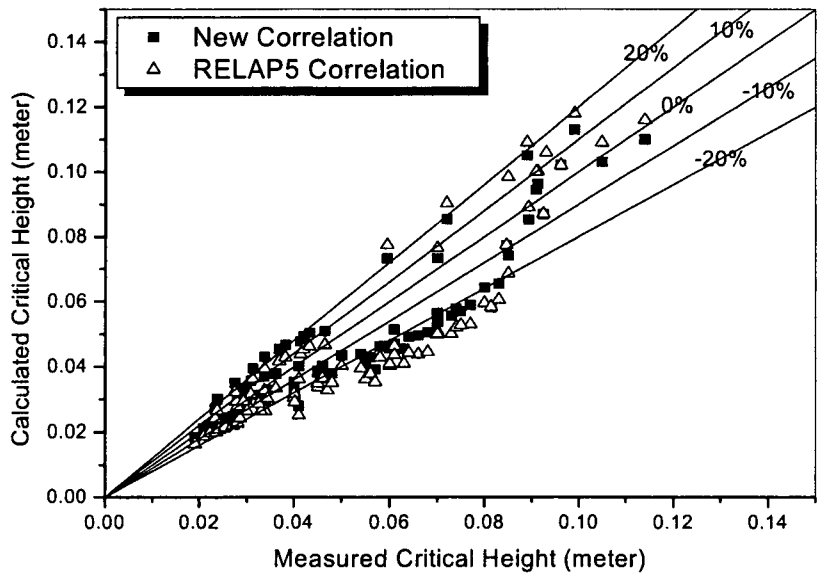

Figure 4 Vertical Downward Branch Correlation Comparison

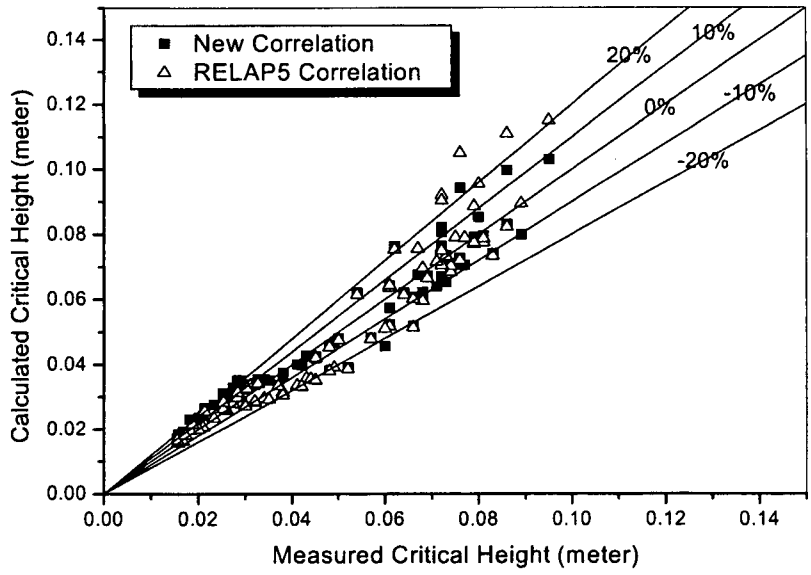

Figure 5 Vertical Upward Branch Correlation Comparison

3.3 Model Verification and Validation

The developed models described in previous section, were applied to RELAP5/MOD3 [5]. In order to simulate the general angled branch, the liquid entrainment and vapor pull-through model of RELAP5 was modified in the stratified liquid level, angled branch elevation, and Critical Depth Correlation for angled branch configuration. Implementing the above new model into RELAP5, the subprogram, HZFLOW which calculate the fluid flow characteristics under horizontal stratification conditions was modified. For the related branch angle input processing, the input subroutines RBRANCH, RSNGLJ, and RVALVE were modified and the new model can be used in single junction, branch and valve components [19].

For validation of the modified model, two approaches were followed; the first one is a conceptual problem and the second is a limited SET (Separate Effect Test) problem. The objective of the conceptual problem is to investigate whether the errors were induced by the modifying procedure and whether the new model gives physically reasonable prediction of the off-take phenomena. The SET problem is selected to evaluate the performance of the new model in comparison with the experimental results.

As a conceptual problem, a discharge from a reservoir was selected [19]. The reservoir has saturated 100 bar heavy water and 7 branches are connected to the reservoir at various angles (-90° ~ 90°). This problem can be defined as the higher branch flow transition occurred from liquid to vapor earlier than that of lower branch, as the reservoir level decreased. Modeling of this problem is shown in Figure 6, and the results are also shown in Figure 7, 8 and 9.

As shown in Figure 7, at about 200 seconds after the initiation of flow through seven branches, the reservoir is completely depressurized. Comparisons of liquid fractions and mass flow rate for each branch line are shown in Figure 8 and 9, respectively. The transition starts at upper branches and propagates to lower branches. In Figure 8, the differences among each vapor entrainment timings of branches become larger as the reservoir level decreases. Initially, the liquid leaks out through all 7 branches and the pressure including water head is large. As the

pressure decreases, the rate of level reduction became slower and the amount of time increased after upper branch was uncovered. The vapor pull-through occurs before the water level reaches the entrance of branch. For example, in the case of 0o branch, the vapor pull-through was observed at 0.34 void fractions before the void fraction reaches 0.5. These results show that the geometric modeling concept is reasonably accurate and consistent with the physical phenomena.

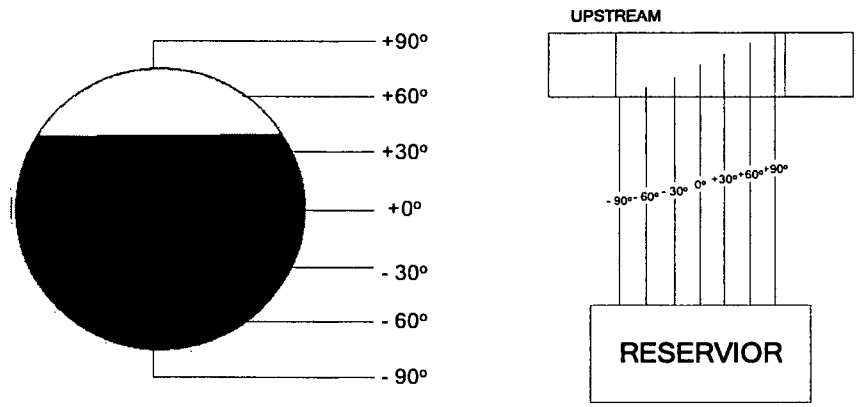

Figure 6 Modeling for New Model Verification (90°~-90°)

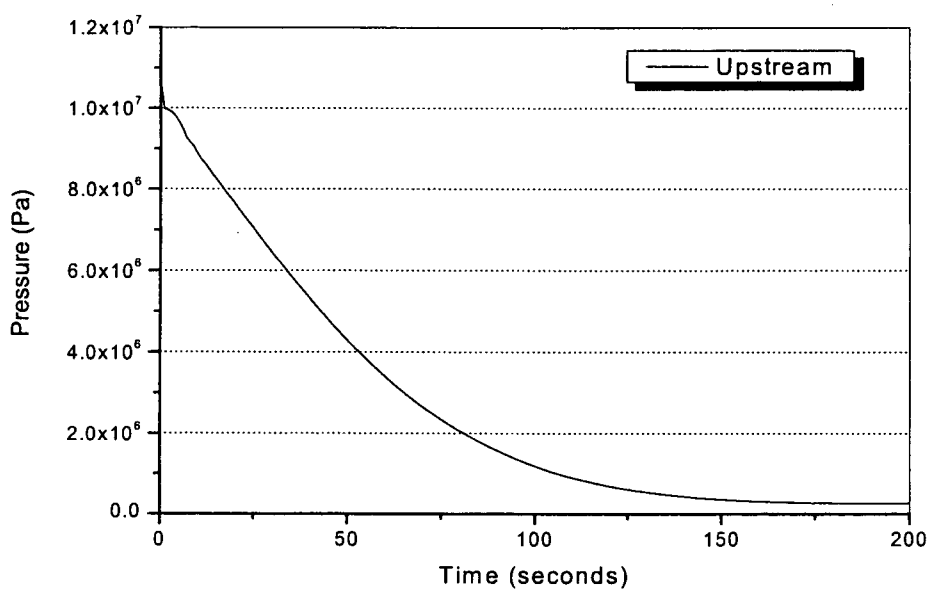

Figure 7 Upstream Pressure Behavior for Verification

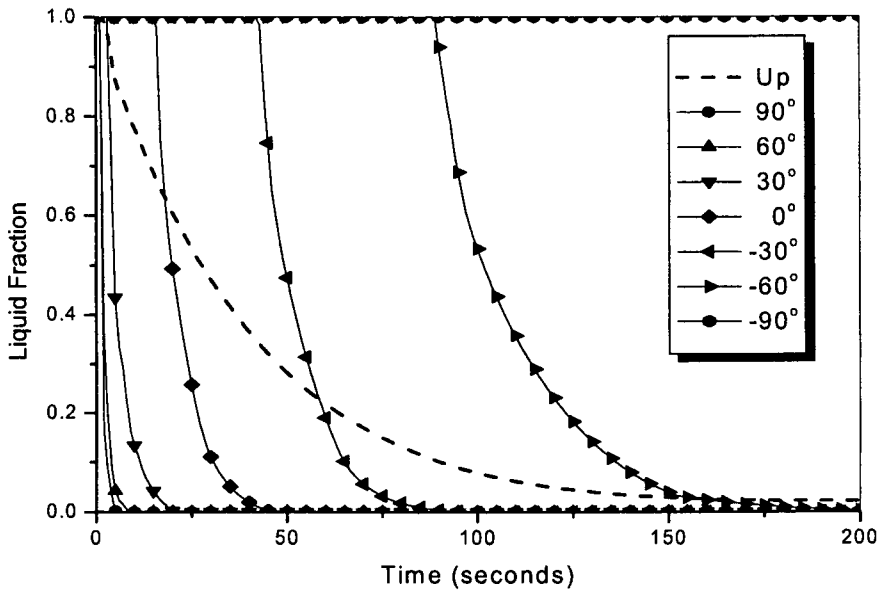

Figure 8 Branch Line Liquid Fraction Results for Verification

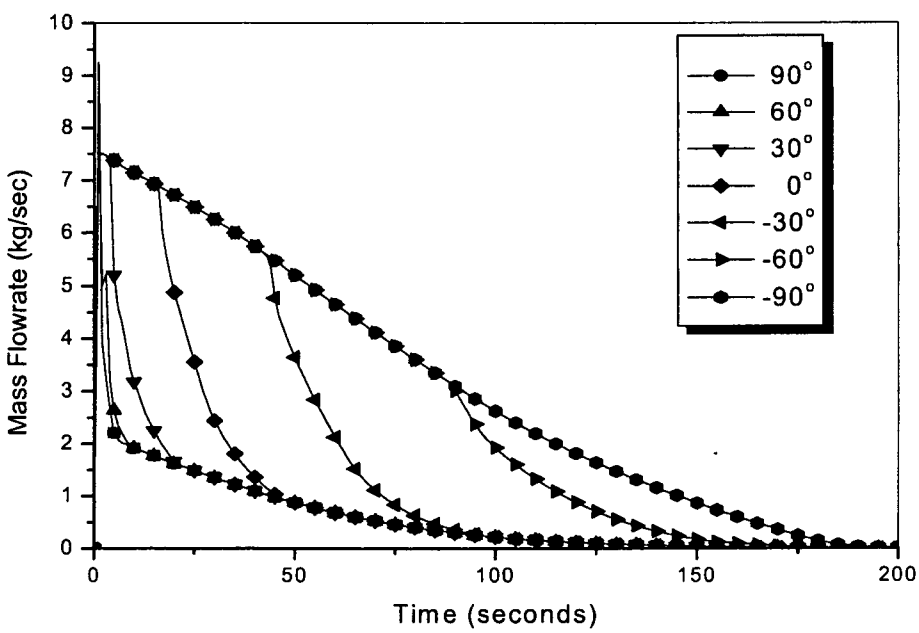

Figure 9 Branch Line Mass Flowrate Results for Verification

For the SET (Separate Effect Test) validation, Canadian experimental facility [14] was selected as the SET assessment. Hassan et al. [14] performed the experiment about off-take

phenomena, and this experiment is characterized by angled branch line. The experiment was performed in a horizontal pipe (58mm in diameter) with one branch size (d=0.635mm) and different orientations (0, 45, and 90 degrees) at system pressures of 316 kpa and 517 kpa using air-water mixture. This experimental facility was described in Appendix A. The test section of the facility had a semicircular shape of 50.8mm diameter and 50.8mm length. The 0, -45 and -90 degrees data were selected among many data sets. RELAP5/MOD3 model is shown in Figure 10.

In Figures 11, 12, and 13, the reservoir level and branch mass flow rate are shown and the experimental results are predicted well by the RELAP5 with new model. As shown in Figure 11, the calculated results for -45o show that the new model can predict the experimental results with reasonable accuracy and void appeared in branch line before the level reached the branch elevation. Figure 12 and 13 show that the results of the original RELAP5 and RELAP5 with new model provide good predictions with almost same accuracy. Also, the above void appearance behavior in branch line before the level reached the branch elevation is also shown in the results of 0 and -90 degrees in Figure 12 and 13. Moreover, in the cases of 0 and -90 degrees, the results with new model show better and more stable agreement with experiments than those with the original RELAP5/MOD3.

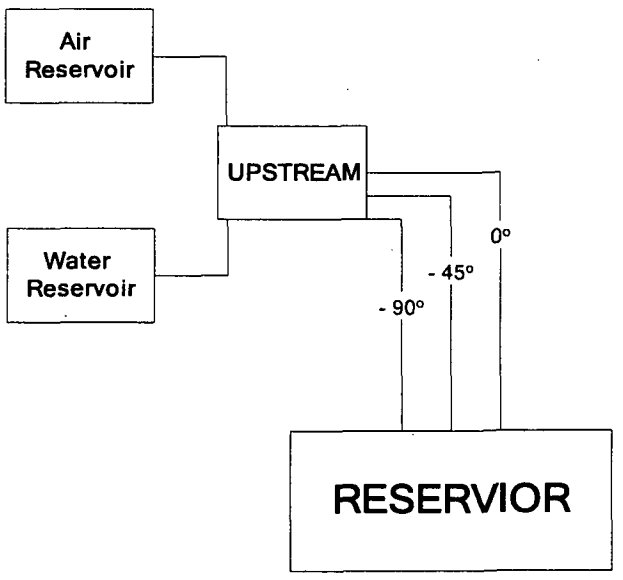

Figure 10 Modeling for New Model Validation

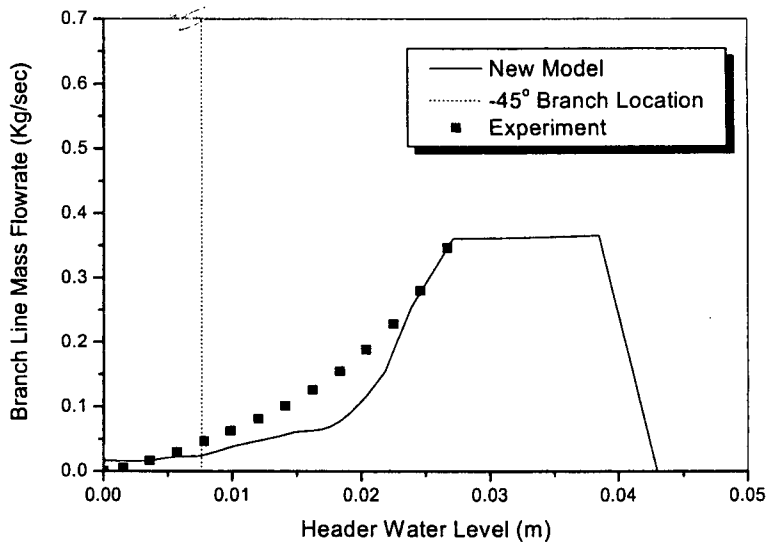

Figure 11 New Model Validation for -45° branch line

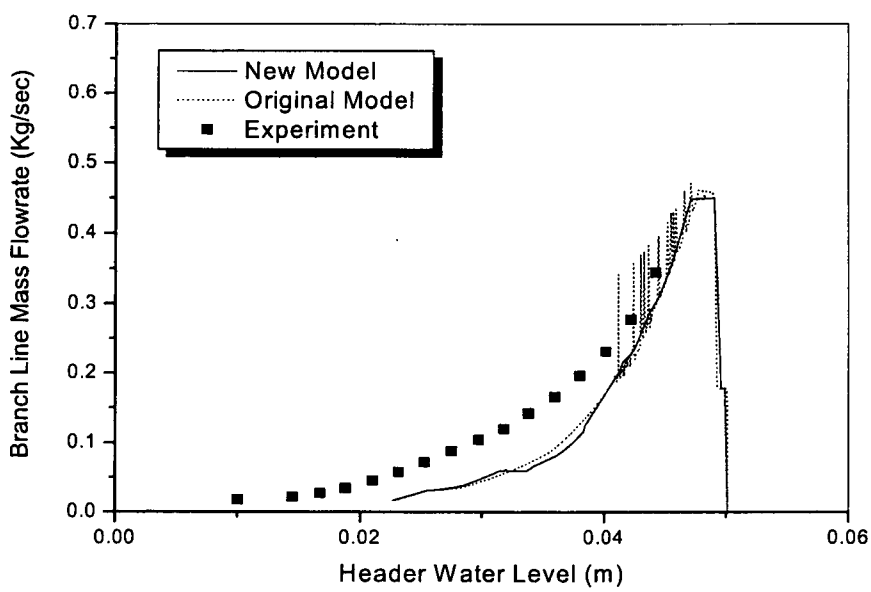

Figure 12 New Model Validation for 0° branch line

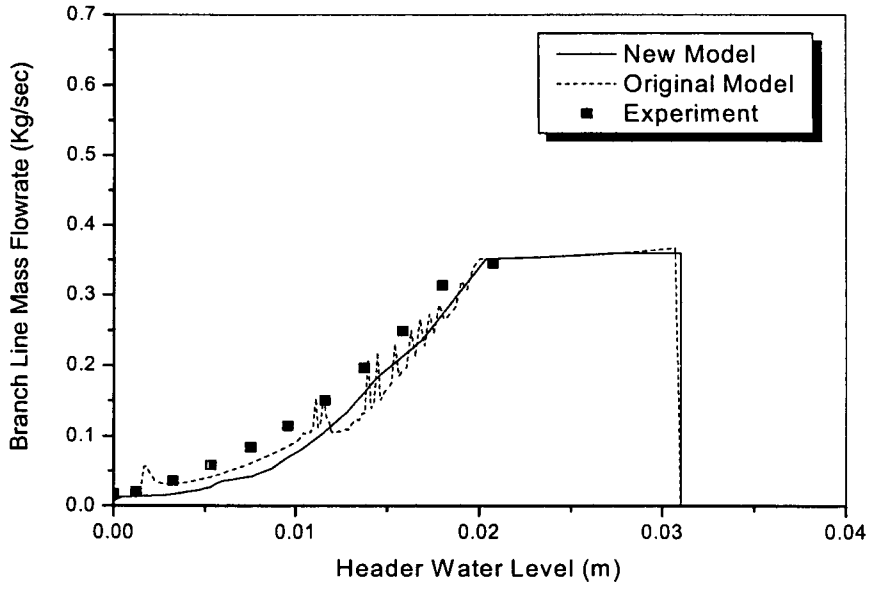

Figure 13 New Model Validation for -90° branch line

4. CONCLUSIONS

The onset of liquid entrainment and vapor pull-through model, represented by the critical height were studied in the angled branch line configurations in a large pipe. The new model was introduced based on the point sink method, considering branch line connection angle, as theoretical approach, and the constants of new model were determined using the previous large number of experimental data. The new model was applied to vertical upward, downward and angled branches, and new model provides more accurate calculations compared with original RELAP5.

The new model was applied to RELAP5/MOD3. For verification, conceptual problem calculations have been performed for a conceptual blowdown problem with different connection angles of branch in a horizontal pipe. The calculated void fraction and mass flow rate of different location of branches shows the validity of implemented model. As validation, the Canadian experiment was adopted and this experiment was performed in a horizontal pipe with a branch and different orientations using air-water mixture. The data for 0, -45 and -90 degrees were selected among many data sets. The modified RELAP5 with new model gave improved results for the horizontal side and vertical downward and angled branch line.

5. REFERENCES

1. Zuber, N., "Problems in Modeling of Small Break LOCA," Nuclear Regulatory Commission Report, NUREG-0724, 1980.
2. Korea Electric Power Company, "Wolsong Nuclear Power Plant Unit 2, 3, 4 Final Safety Analysis Report," May 1995.
3. B.D.Chung et al., "Development of Preliminary PIRT (Phenomena Identification and Ranking Table) of Thermal-Hydraulic Phenomena for 330Mwt SMART Integral Reactor," KAERI/TR-912/97, September 1997.
4. Thermal Hydraulics Group "RELAP5/MOD3 Code Manual Volume 4: Models and Correlations", Scientech, Inc., NUREG/CR-5535, 1998.
5. C. Smoglie, "Two-Phase Flow Through Small Branches in a Horizontal Pipe with Stratified Flow," KfK 3861, Kernforschungszentrum Karlsruhe GmbH (KfK), Karlsruhe, FRG, December 1984.
6. V. E. Schrock, S. T. Revankar, R. Mannheiner, and C. H. Wang, "Small Break Critical Discharge The Role of Vapor and Liquid Entrainment in a Stratified Two-Phase Region Upstream of the Break," NUREG/CR-4761, LBL-22024, Lawrence Berkeley Laboratory, December 1986.
7. Yonomoto, T. and Tasaka, K., "New Theoretical Model for Two-Phase Flow Discharged from Stratified Two-Phase Flow Discharged from Stratified Two-Phase Region Through Small Break," J. *Nuclear Science Technology*, **25**, 441-455, 1988
8. Yonomoto, T. and Tasaka, K., "Liquid and Gas Entrainment to Small Break Hole from a Stratified Two-Phase Region," *International Journal of Multiphase Flow*, **17**, 745-765, 1991
9. T. Maciaszek and A. Menponteil, Experimental Study on Phase Separation in a Tee Junction for Steam-Water Stratified Inlet Flow, Paper C2, European Two-Phase Flow Working Group Meeting, Munich, FRG, June 10-13, 1986.
10. Y.J.Cho, et al., "Modeling of Liquid Entrainment and Vapor Pull-Through in Header-Feeder Pipes of CANDU," *Journal of Korean Nuclear Society*, **36**, No.6, April 2004
11. Yong Jin Cho, Gyoo Dong Jeun, "A Study of the Liquid Entrainment and Vapor Pull-Through in an Angled Branch Line," *Nuclear Technology*, **58** No.3, 2007.

12. Craya, A., "Theoretical Research in the Flow of Non-Homogeneous Fluids," La Houille Blanche, pp. 44-55, January-February 1949.

13. Armstrong,K.F., et al., "Theoretical and Experimental Study of the Onset of Liquid Entrainment During Dual Discharge from Large Reservoirs," *International Journal of Multiphase Flow*, **18**, 217-227, 1992.

14. Ibrahim G.Hassan, Hassan M. Soliman, Grant E. Sims and Janusz E. Kowalski, "The Onset of Liquid Entrainment during Discharge from Two Branches on an Inclined Wall," *The Canadian Journal of Chemical Engineering*, **77**, June 1999.

15. Milne-Thomson, L.M., "Theoretical Hydrodynamics," 5th Ed., MacMillan and Company Ltd., London, UK (1968)

16. J. L. Anderson and R. L. Benedetti, Critical Flow Through Small Pipe Breaks, EPRI NP-4532, Idaho National Engineering Laboratory, May 1986.

17. T.S.Andreychek, et al, "Loss of RHRS cooling while the RCS is partially filled," WCAP-11916, July 1988.

18. SAS User's Guide, Version 6, Fourth Edition, Volume 1 and 2, Cary NC, USA, SAS Institute Inc., 1989.

Appendix A

Description of Canadian Experimental Facility used in SET Validation

Canadian experimental facility was adopted for SET validation: This facility is small facility which was designed for CANDU header-feeder system. A schematic diagram of the flow loop is shown in Figure A.1. An immersion-type circulating pump was used to supply distilled water to the test section at a rate adjusted by a by-pass line. The temperature of the water was held steady during the experiment by a cooling coil as shown in Figure A.1. The large reservoir was connected to an air supply equipped with a feed-back pressure controller which maintained a steady pressure Po in the test section throughout the experiment.

The two-phase flows leaving the test section through the branches were directed to their respective separators where the air and water were split by centrifugal action. The flow rates of air and water leaving the measuring separators were each measured by a bank of four variable-area type flow meters with overlapping ranges. Each of these flow-measuring stations covered the range of 15cm3/min to 0.0415m3/min on the water side and 198 cm3/min to 1.3m3/min at standard conditions on the air side. The temperature and pressure within the large reservoir, as well as other location within the loop, were recorded during the experiment. All flow meters, thermocouples and pressure gauges were calibrated before testing began.

For two-phase reservoir, details of the large reservoir are shown in Figure A.2 with water entering through the bottom flange, air entering through the left flange and discharge through the right flange. The reservoir was manufactured from type 304 stainless steel sections, except for a clear acrylic pipe section near the outlet flange for visual observation of the flow phenomena. The acrylic pipe was held firmly between two machined flanges by four tie-rods and sealed with an O-ring at each end. The air and water entering through the reservoir were dispersed into a number of streams to prevent any waves or ripples on the gas-liquid interface. The attainment of a smooth interface was essential in eliminating fluctuations in the differential pressure transducer signal used to measure the liquid level height. Details of the inlet air and water dispersers are shown in Figure A.3 and A.4, respectively. Each disperser was mounted onto the inner face of the corresponding flange.

A schematics diagram of a test section used in group nos. 1 to 3 is shown in Figure A.5. The first part of the discharge branches were holes, 6.35mm in diameter and 127mm long, machined in a brass block and bolted to the stainless-steel outlet flange. Thus, each branch had a straight length of 20 diameters before any bends or area changes were incorporated. Two brass blocks were machined to provide L/d=1.5, 2, 3 and 8. A surveying transit was used to ensure that the faces of the outlet

flange and the brass block were vertical and that the centerlines of the test branches fell on a straight (horizontal in group no.2 and vertical in group no.3) line. Only one branch was active in group no.1 experiments.

The test section used in group no.4 is shown in Figure A.6. A semicircular shape of diameter 50.8mm and length 50.8mm was machined in a brass block and three branches were drilled and connected to the semicircular surfaces at angles 0o, 45o and 90o from the horizontal as shown in the Figures. The branches started out with a diameter d=6.35mm, were maintained at this size for a length of at least 4 diameters were subsequently enlarged to a diameter 9.53mm, as shown in Figure A.6. The brass block was bolted to a stainless-steel blind flange and the semicircular surface and branches were exposed to a large, stratified, air-water region.

In the early stages of the investigation, consideration was given to a circular (full header) test section with 5 branches. However, a careful analysis of the expected flow conditions revealed that the flowrates leaving the branches would have to be kept fairly small if stratified conditions were to be maintained in the header. Due to the interest in a wide range of branch flow rates, a semicircular (half header) test section that is opened to a large volume was adopted instead. Certain conditions would have to be satisfied if the results of the semicircular section are to be considered applicable to the circular geometry.

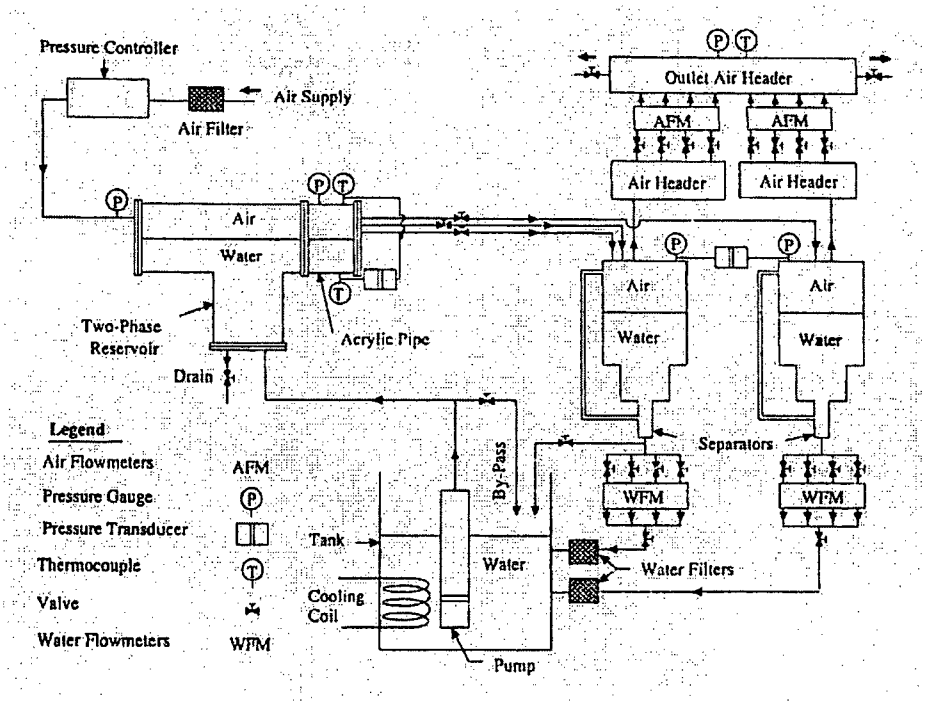

Figure A.1 Schematic diagram of experimental test facility

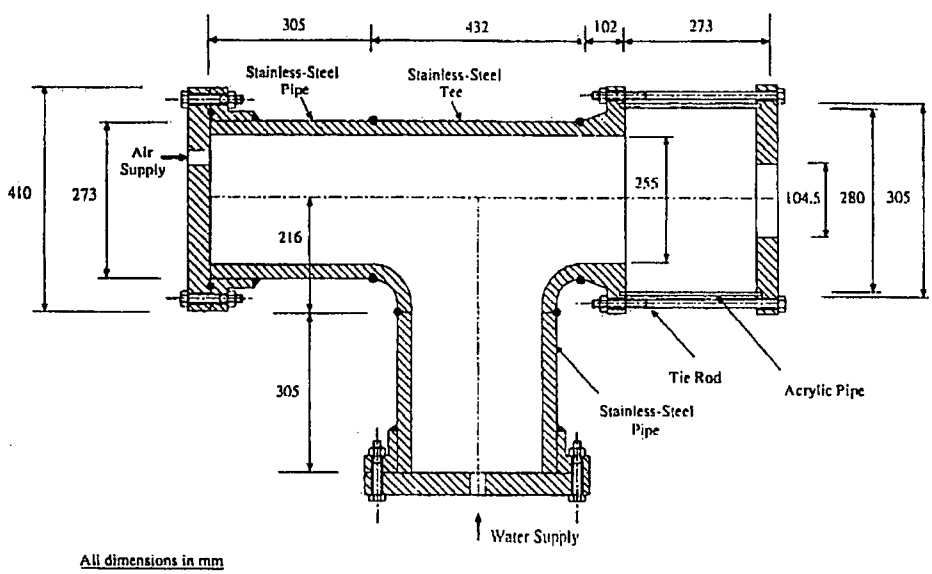

Figure A.2 Cross-sectional view of two-phase reservior

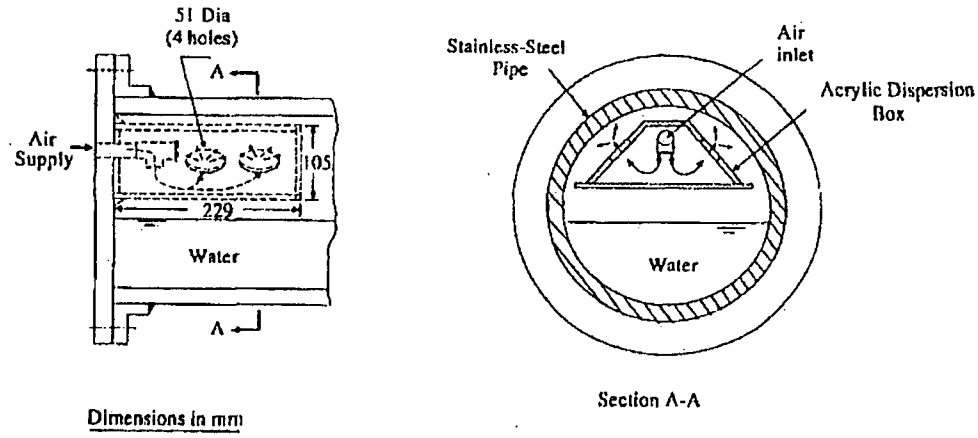

Figure A.3 Details of air disperser

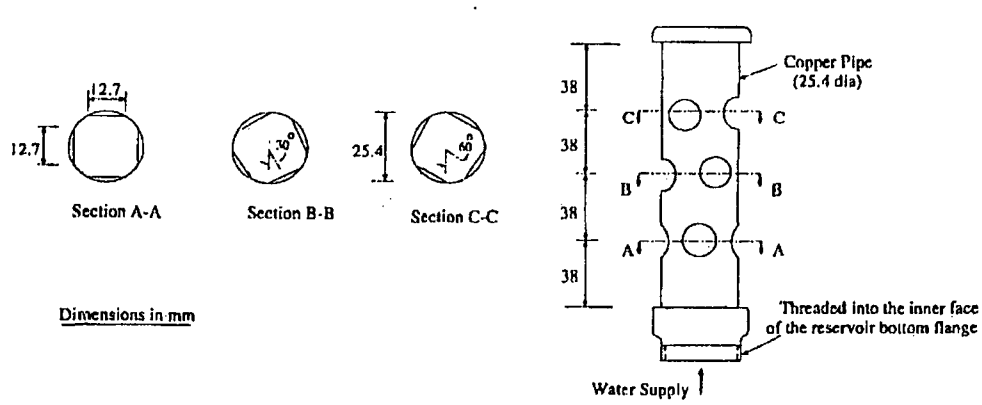

Figure A.4 Details of water disperser

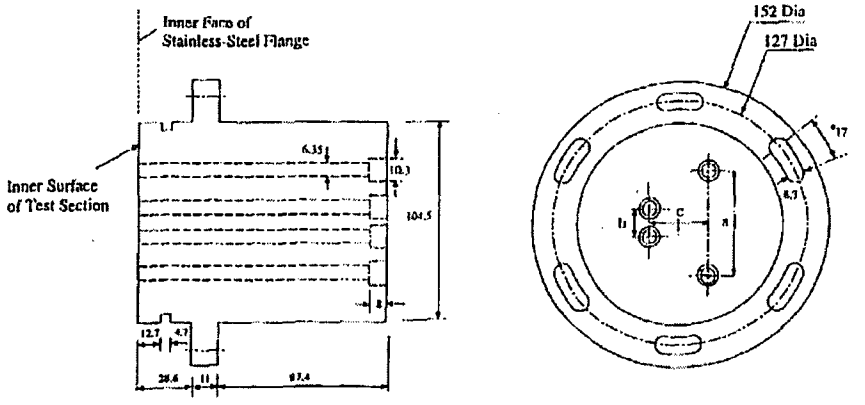

Length	Test Section no. 1	Test Section no. 2
a	50.8	19.05
b	12.7	10.30
c	25.4	38.10

All dimensions in mm

Figure A.5 Details of the test section for group no. 1-3

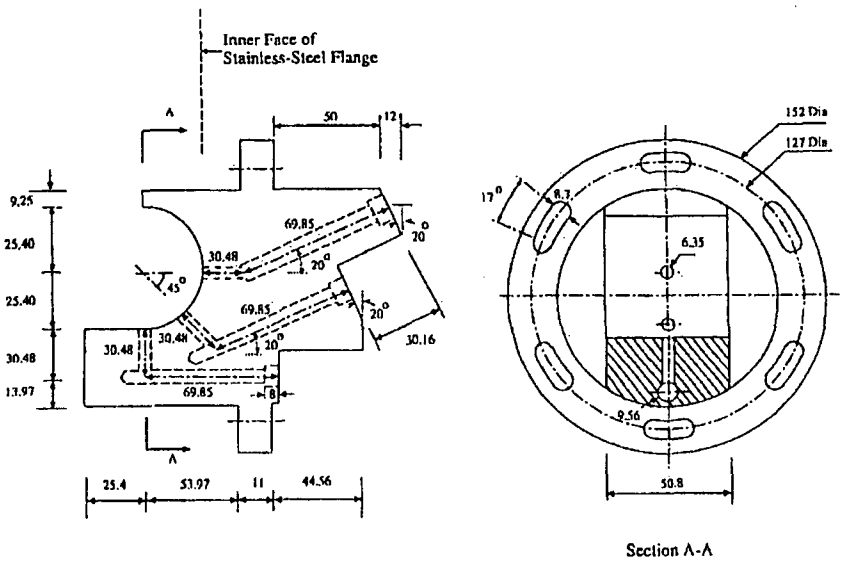

All dimensions in mm

Figure A.6 Details of the test section for group no. 4

Appendix B

Lists of Subprogram Changes

Changes in 'hzflow'

```
SUBROUTINE hzflow(ichoke)
!define win32dvf
!define erf
!define fourbyt
!define hconden
!define impnon
!define in32
!define newnrc
!define ploc
!define sphaccm
.
.
.
INCLUDE 'voldat.h'
! candu HDR i1
     INCLUDE 'cons.h'
!  Local variables.
     INTEGER i,ik,j,k,kk,kx,ky,l,ll,lx,ly,m,nmap
     LOGICAL countc
     REAL(8) aj,ajth,alf,alg,alphef,alpham,arfg,argf
.
.
.
PARAMETER (grvmp2=0.634d0,grvp5=3.13d0)
     REAL(8) psinq,pcosq
! candu HDR i1
     REAL(8) voidgs,hangle
!
!  Data statements.
     DATA  ighsed,ighseh,ighsex/0,0,0/
.
.
.
!  Upward-oriented junction  -- liquid entrainment.
!  Calculate critical depth, limiting to a diameter.
!  CANDU.CHO.START
!  Replace critical height correlation
!     Delete 3 line, Insert 5 line
!                              hbf=(wgg*wgg/(rhog(kk)*max(rhof(kk)-&
!                              rhog(kk),1.d-7)))**0.2d0*(1.67d0*   &
!                              grvmp2)
                              hbf=(wgg*wgg/(rhog(kk)*max(rhof(kk)-  &
                              rhog(kk),1.d-7)))**0.2d0*(0.5146d0*   &
                              grvmp2)*(min(diamv(kk),diamv(ll))/    &
                              max(diamv(kk),diamv(ll))**(-0.24198d0)&
                              *(max(cos(theta),1.d-7))**0.d0
!  CANDU.CHO.END! candu HDR-
IF(hbf.gt.diamv(kk))then
                              hbf=diamv(kk)
                           ELSE
                              hbfdw=1.0d0
                              ENDIF
                              IF((diamv(kk) * 0.5d0-hcll)        &
                              .ge.hbf.and.vdg.lt.1.0d0)then
!  No entrainment possible with old gas flow, see if using pure gas
!
.
.
.
.
!
!  Side or central junction.
.
.
.
!  CANDU.CHO.START
!  Replace critical height correlation
!     Delete 3 line, Insert 5 line
!  RELAP5 ORIGINAL
!                              hbf=(wgg*wgg/(rhog(kk)*max(rhof(kk)-&
!                              rhog(kk),1.d-7)))**0.2d0*(0.69d0*   &
!                              grvmp2)
!  MODIFIED BY B.D.CHUNG
!                              hbf=(wgg*wgg/(rhog(kk)*max(rhof(kk)-&
!                              rhog(kk),1.d-7)))**0.2d0*(0.69d0*   &
!                              grvmp2)
```

```
                                hbf=(wgg*wgg/(rhog(kk)*max(rhof(kk)-  &
                                rhog(kk),1.d-7)))**0.2d0*(0.3416d0*   &
                                grvmp2)*(min(diamv(kk),diamv(ll))/    &
                                max(diamv(kk),diamv(ll))**(-0.115d0)  &
                                *(max(cos(theta),1.d-7))**(-0.34d0)
!  CANDU.CHO.END
.
.
.
.
.
.

!  Downward-oriented junction  -- gas pullthrough
!  Calculate critical depth, limiting to a diameter
!  CANDU.CHO.START
!  Replace critical height correlation
!     Delete 3 line, Insert 5 line
!                                 hbf=(wff*wff/(rhof(kk)*max(rhof(kk)-&
!                                 rhog(kk),1.d-7)))**0.2d0*(1.5d0*    &
!                                 grvmp2)
                                hbf=(wff*wff/(rhof(kk)*max(rhof(kk)-  &
                                rhog(kk),1.d-7)))**0.2d0*(0.8286d0*   &
                                grvmp2)*(min(diamv(kk),diamv(ll))/    &
                                max(diamv(kk),diamv(ll))**(-0.07012d0)&
                                *(max(cos(theta),1.d-7))**0.d0
!  CANDU.CHO.END

.
.
.
.
.
.
```

Appendix C

Input Deck for Model Verification

```
= Horizontal Stratification Take Off Model
*    running type
*----------------------
* option 14 : turn off constitutive relation
*1    14
100   new   transnt
101   run
102   si       si
105   2.   4.
110   nitrogen
115   1.0
*
120    100010000    0.0        d2o        channel
*
201   100.    1.0e-6   0.1    3    10    1000    10000
*201   500.    1.0e-6   0.1   3    10    1000    100000
*201   10.    1.0e-6   0.1    3    10    10000   10000
*201   300.    1.0e-6   0.01    7    200    50000   50000
*****************************************************
*    minor edit volumes
*----------------------
*300    70.2   70.8
301    p   100010000
302    p   100020000
311    voidg    100010000
312    voidg    100020000
313    voidg    100030000
331    quale    100020000
332    quals    100020000
334    xej      101000000
341    voidgj   101000000
342    voidgj   102000000
343    voidgj   103000000
344    voidgj   104000000
345    voidgj   105000000
346    voidgj   106000000
347    voidgj   107000000
348    voidgj   108000000
361    mflowj   101000000
362    mflowj   102000000
363    mflowj   103000000
364    mflowj   104000000
365    mflowj   105000000
366    mflowj   106000000
367    mflowj   107000000
368    mflowj   108000000
*
501   time    0                ge    null    0        0.0        l
*
*****************************************************
*   Heated Section Pipe
*
1000000    chan1        pipe
*1000000    chan1        canchan
```

```
1000001   3
1000101   1.0          3
1000201   0.0          2
1000301   1.0          3
1000401   0.0          3
1000501   0.0          3
1000601   0.0          3
1000701   0.0          3
1000801   0.0          0.0       3
1000901   0.939        0.939     2
1001001   100          3
1001101   100          2
1001201   002    10.69e6    0.0001      0. 0. 0.   3
1001300   1
1001301       0.0    0.0    0.0    2
*         Dj
1001401   0.00       0.0    1.0    1.0   2
*************************************************
1010000   jun882   valve
1010101   100020003 200000000    0.0001    0.00    0.00   10100
1010102   1.00   0.14   *0.0
1010201   1    0.0    0.0    0.0
1010300   trpvlv
1010301   501
*
*************************************************
1020000   jun882   valve
1020101   100020003 200000000    0.0001    0.00    0.00   40100
1020102   1.00   0.14   80.0
1020201   1    0.0    0.0    0.0
1020300   trpvlv
1020301   501
*
*************************************************
1030000   jun882   valve
1030101   100020003 200000000    0.0001    0.00    0.00   40100
1030102   1.00   0.14   60.0
1030201   1    0.0    0.0    0.0
1030300   trpvlv
1030301   501
*
*************************************************
1040000   jun882   sngljun
1040101   100020003 200000000    0.0001    0.00    0.00   40100
1040102   1.00   0.14   40.0
1040201   1    0.0    0.0    0.0
*1040300   trpvlv
*1040301   501
*
*************************************************
1050000   jun882   sngljun
1050101   100020003 200000000    0.0001    0.00    0.00   40100
1050102   1.00   0.14   30.0
1050201   1    0.0    0.0    0.0
```

```
************************************************
1060000    jun882   valve
1060101    100020003 200000000    0.0001    0.00    0.00   40100
1060102    1.00   0.14   20.0
1060201    1    0.0    0.0    0.0
1060300    trpvlv
1060301    501
*
************************************************
1070000    jun882   valve
1070101    100020003 200000000    0.0001    0.00    0.00   40100
1070102    1.00   0.14    10.0
1070201    1    0.0    0.0    0.0
1070300    trpvlv
1070301    501
*
************************************************
1080000    jun882   sngljun
1080101    100020003 200000000    0.0001    0.00    0.00   30100
1080102    1.00   0.14    *0.0
1080201    1    0.0    0.0    0.0
*1080300    trpvlv
*1080301    501
*
2000000   system      snglvol
*          Area          Length        Volume              ANGLE   Height      Rough
2000101   0.0            20.000        1000.000    0.0     -90.0   -20.000     0.00000
2000102   0.0            000000
2000200   002             1.0000e5     1.00
*
* termination card
```

Appendix D

Input Deck for Model Validation

```
= Horizontal Stratification Take Off Model
* angle=45 degree
* level decrease
*    running type
*---------------------
* option 14 : turn off constitutive relation
*1    14
100   new   transnt
101   run
102   si       si
105   2.   4.
110   nitrogen
115   1.0
*
120    100010000    0.0        h2o        channel
*
*201   10.       1.0e-6   0.1      3    10       1000      10000
202    10.       1.0e-11   0.01   3    1    100000    1000000
*****************************************************
*    minor edit volumes
*---------------------
301    p   100010000            0.0e+7   5.0e+5 1   1 * channel in   pressure
311    voidg     100010000    0.0       1.5      2   1
341    voidgj   101000000    0.0       1.5      2   2
342    voidfj   101000000    0.0       1.5      2   3
343    voidgj   031000000    0.0       1.5      2   4
344    voidfj   031000000    0.0       1.5      2   5
361    mflowj   101000000    0.0       0.5      4   1
372    mflowj   031000000    0.0       0.5      4   2
375    voidg    200010000    0.0       1.5      5   1
380    cntrlvar 005            0.0       0.06    6   1
*
501   time    0            ge    null     0        3.0          l
502   time    0            ge    null     0        0.0          l
*
0300000   system      snglvol
*          Area      Length      Volume      ANGLE   Height      Rough
0300101   0.0       5.500       5.5         0.0     90.0   5.5   0.00000
0300102   0.0       000000
0300200   004       0.316e6     300.0     1.00
*0300200   004       0.316e6     300.0     1.00
*
0310000    jun882   sngljun
0310101    030000000 100000000     0.0001     0.00     1.e0   020000
0310201    1    0.0     0.0     0.0
**
*****************************************************
*   Heated Section Pipe
*
1000000   system      snglvol
*          Area          Length     Volume      ANGLE   Height      Rough
1000101   0.0020258   0.2          0.0          0.0     0.0   0.0     0.00000
1000102   0.0       000000
1000200   003       0.316e6     300.0     0.0
```

```
************************************************
1010000    jun882   valve
1010101    100010000 200000000    0.00003165    0.00    0.00   40100
1010102    1.00   0.14   -45.0
1010201    1    0.0    0.0    0.0
1010300    trpvlv
1010301    501
*
************************************************
*
2000000   system      snglvol
*         Area          Length          Volume    ANGLE   Height      Rough
2000101   0.00003165   0.1              0.0       0.0   -45.0   -0.07071   0.00000
2000102   0.0            000000
2000200   004       0.316e6    300.0    0.00
************************************************
**
2500000    jun882   sngljun
2500101    200010000 300000000    0.00003165    1.5    0.00   00000
2500201    1    0.0    0.0    0.0
*
3000000   system      snglvol
*         Area      Length      Volume      ANGLE   Height      Rough
3000101   0.0       20.000      100000.0    0.0    -90.0   -20.000    0.00000
3000102   0.0       000000
3000200   004       0.19e6     300.0    1.00
*
20500100   lvl_hdr    sum    1.0   0.0    1
20500101       0.0      1.0    voidf    100010000

20500500      isgzelvl   function    0.0508   0.0   1
20500501      cntrlvar    001      501

*
20250100      normarea
20250101      0.                  0.
20250102      0.000140812         0.00190265
20250103      0.001121358         0.00759612
20250104      0.003755859         0.01703708
20250105      0.00880828          0.030153677
20250106      0.016969119         0.046846087
20250107      0.028834425         0.066987271
20250108      0.044887692         0.090423941
20250109      0.065485162         0.116977732
20250110      0.090845005         0.146446552
20250111      0.121040688         0.178606126
20250112      0.155998745         0.2132117
20250113      0.195501005         0.249999906
20250114      0.239191228         0.288690762
20250115      0.286585921         0.328989809
20250116      0.337089033         0.370590346
20250117      0.390010069         0.413175768
20250118      0.444585061         0.456421975
20250119      0.499999792         0.499999837
```

20250120	0.555414526	0.5435777
20250121	0.609989528	0.58682391
20250122	0.662910578	0.629409338
20250123	0.713413712	0.671009884
20250124	0.76080843	0.711308942
20250125	0.804498682	0.749999811
20250126	0.844000976	0.786788032
20250127	0.878959068	0.821393624
20250128	0.909154787	0.853553217
20250129	0.934514666	0.883022058
20250130	0.955112171	0.909575871
20250131	0.97116547	0.933012566
20250132	0.983030807	0.953153775
20250133	0.991191671	0.969846211
20250134	0.996244113	0.982962836
20250135	0.998878629	0.992403823
20250136	0.999859185	0.998097321
20250137	1.	1.

*

. * termination card

NRC FORM 335
(9-2004)
NRCMD 3.7

U.S. NUCLEAR REGULATORY COMMISSION

BIBLIOGRAPHIC DATA SHEET

(See instructions on the reverse)

1. REPORT NUMBER
(Assigned by NRC, Add Vol., Supp., Rev., and Addendum Numbers, if any.)
NUREG/IA-0239

2. TITLE AND SUBTITLE
Development of Horizontal Off-Take Model for Application to Reactor Headers of CANDU Type Reactors

3. DATE REPORT PUBLISHED

MONTH	YEAR
June	2010

4. FIN OR GRANT NUMBER

5. AUTHOR(S)
Yong Jin Cho, Seung-Hoon Ahn, In-Goo Kim/KINS
Gyoo Dong Jeon/HYU

6. TYPE OF REPORT
Technical

7. PERIOD COVERED *(Inclusive Dates)*

8. PERFORMING ORGANIZATION - NAME AND ADDRESS *(If NRC, provide Division, Office or Region, U.S. Nuclear Regulatory Commission, and mailing address; if contractor, provide name and mailing address.)*

Korea Institute of Nuclear Safety (KINS)
19 Gusung-Dong, Yusong-Gu
Daejeon, 305-338, Korea

Hanyang University
17 Haengdang-dong, Seongdong-gu
Seoul, 133-791, Korea

9. SPONSORING ORGANIZATION - NAME AND ADDRESS *(If NRC, type "Same as above"; if contractor, provide NRC Division, Office or Region, U.S. Nuclear Regulatory Commission, and mailing address.)*
Division of Systems Analysis
Office of Nuclear Regulatory Research
U.S. Nuclear Regulatory Commission
Washington, DC 20555-0001

10. SUPPLEMENTARY NOTES
A. Calvo, NRC Project Manager

11. ABSTRACT *(200 words or less)*
In the CANDU accident analysis the header is one of the important components to be well modeled, because it has great impact on the fuel channel behavior during some accidents. The feeder void fraction, affected by thermal-hydraulic behavior in the headers, may affect the fuel bundle coolability. The liquid entrainment and vapor pull-through (off-take) phenomena in the header are considered highly important, in case where horizontal stratification is achieved inside the header.
To generalize the model for application to various branch angles, a critical height correlation was reconstructed by using the point skin method, and then the constants were determined so the correlation can fit well with the previous large number of experimental data. The new model considers the effects of different branch angles on the off-take, and tested against the experimental data of various branch angles in a Separate Effect Test (SET).

The verification analysis results in a conceptual blowdown problem showed that the new model gives better accuracy than the original. The new model

12. KEY WORDS/DESCRIPTORS *(List words or phrases that will assist researchers in locating the report.)*
CANDU accident analysis
Separate Effect Test (SET)
RELAP5
large break loss-of-coolant accident (LBLOCA)
Korea Institute of Nuclear Safety (KINS)
Light Water Reactors (LWRs)
RCANDU (CANada Deuterium Uranium)-type heavy water reactors
Hanyang University
Code Application Maintenance Program (CAMP)
Ministry of Education, Science and Technology of the Republic of Korea

13. AVAILABILITY STATEMENT
unlimited

14. SECURITY CLASSIFICATION
(This Page)
unclassified
(This Report)
unclassified

15. NUMBER OF PAGES

16. PRICE

Printed
on recycled
paper

Federal Recycling Program

UNITED STATES
NUCLEAR REGULATORY COMMISSION
WASHINGTON, DC 20555-0001

OFFICIAL BUSINESS