Westinghouse Electric Company
Nuclear Power Plants
P.O. Box 355
Pittsburgh, Pennsylvania 15230-0355
USA

U.S. Nuclear Regulatory Commission
ATTENTION: Document Control Desk
Washington, D.C. 20555

Direct tel: 412-374-6206
Direct fax: 724-940-8505
e-mail: sisk1rb@westinghouse.com

Your ref: Docket Number 52-006
Our ref: DCP_NRC_002909

June 14, 2010

References:

1. DCP_NRC_002744, Re-submittal of Proposed Changes for AP1000 Design Control Document Rev.18, January 20, 2010
2. DCP_NRC_002818, Supplementary Information to DCP_NRC_002744 – Re-Submittal of Proposed Changes for AP1000 Design Control Document Rev.18, March 12, 2010
3. DCP_NRC_002850, Final Information on Proposed Changes for the AP1000 Design Control Document Rev. 18, April 26, 2010
4. DCP_NRC_002874, Final Information on Proposed Changes for the AP1000 Design Control Document Rev. 18, May 21, 2010
5. DCP_NRC_002863, Information on Proposed Changes for the AP1000 Design Control Document Rev. 18, May 10, 2010
6. DCP_NRC_002879, Information on Proposed Changes for the AP1000 Design Control Document Rev. 18, May 25, 2010

Subject: Information on Proposed Changes for the AP1000 Design Control Document Rev. 18

This letter is submitted in support of the AP1000 Design Certification Amendment Application (Docket No. 52-006). The information provided is generic and is expected to apply to all Combined License (COL) applicants referencing the AP1000 Design Certification and the AP1000 Design Certification Amendment Application.

This submittal contains proprietary information of Westinghouse Electric Company LLC. In conformance with the requirements of 10 CFR Section 2.390, as amended, of the Commission's regulations, we are enclosing with this submittal one copy of the Application for Withholding, AW-10-2830 (non-proprietary, Enclosure 1), and one copy of the associated Affidavit (non-proprietary, Enclosure 2) with Proprietary Information and Copyright Notices. The affidavit sets forth the basis on which the information identified as proprietary may be withheld from public disclosure by the Commission. Pursuant to 10 CFR 50.30(b), "Description of Proposed Changes for AP1000 DCD Rev. 18 – Proprietary" and "Description of Proposed Changes for AP1000 DCD Rev. 18 – Non-Proprietary" are submitted as Enclosures 3 and 4. Correspondence with respect to the affidavit or Application for Withholding should include our reference number AW-10-2830 and should be addressed to James A. Gresham, Manager, Regulatory Compliance and Plant Licensing, Westinghouse Electric Company LLC, P. 0. Box 355, Pittsburgh, Pennsylvania 15230-0355.

D063
NRO

Westinghouse provided preliminary information on changes which it proposed to include in Revision 18 of the AP1000 Design Control Document (DCD-18) in a January 20, 2010 letter (Reference 1). Supplementary information on some of those changes requested by the NRC was provided in a March 12, 2010 letter (Reference 2). Information was provided in an April 26, 2010 letter (Reference 3) for seven of the changes identified in the January 20, 2010 that were determined to meet one or more of the Interim Staff Guidance-11 (ISG-11) criteria for reporting to the NRC staff. The remaining 50 "elective" items in the January 20 letter are addressed in a letter dated May 21, 2010 (Reference 4). In a letter dated May 10, 2010 (Reference 5), information was provided for seven design changes that met one or more of the ISG-11 criteria and which supported the AP1000 Licensing Finalization schedule. In a letter dated May 25, 2010 (Reference 6), information was provided for two additional design changes that met one or more of the ISG-11 criteria and which supported the AP1000 Licensing Finalization schedule.

This letter provides information on one additional design change. Change Notice 67 addresses changing the method of closure for multiple lines from blind flanges and threaded caps to pipe/tubing plugs. This design change was found to meet one or more of the ISG-11 criteria. Information for this change is provided in Enclosure 3, including the reasons for the changes and the sections of the DCD which are impacted. Enclosure 4 provides a non-proprietary version of the information in Enclosure 3. Enclosure 5 provides a copy of the revised DCD pages.

In the process of generating Change Notice 67, Westinghouse drafted related P&ID-type figures by using "cloud" markings to identify specific revisions related to this change notice. These draft P&ID-type figures also include other revisions that have been approved by our Change Control Board, but for which the decision to include in or exclude from DCD-18 has not been finalized. For DCD-18 Westinghouse will provide final figures which reflect the design as agreed upon with NRC staff, including the appropriate design changes, responses to RAIs/OIs, and any errata or other minor changes agreed upon with NRC staff.

As noted previously, the changes described in this and the referenced letters do not constitute all of the changes which Westinghouse proposes to include in DCD-18. Rather, the changes in this letter are in addition to those which Westinghouse either has submitted or will submit to the NRC as responses to Requests for Additional Information or Safety Evaluation Report Open Items.

Westinghouse will work with the NRC staff to disposition the changes described in this letter as expeditiously as possible. Questions related to the content of this letter should be directed to Westinghouse. Please send copies of such questions to the prospective COL applicants referencing the AP1000 Design Certification. A representative for each applicant is included on the cc: list of this letter.

Very truly yours,

for/ John DeBlasio

Robert Sisk, Manager
Licensing and Customer Interface
Regulatory Affairs and Strategy

/Enclosures

0557ljb.doc

1. AW-10-2830, Application for Withholding Proprietary Information from Disclosure, dated June 14, 2010
2. AW-10-2830, Affidavit, Proprietary Information Notice, Copyright Notice, dated June 14, 2010
3. Description of Proposed Changes for AP1000 DCD Rev. 18, Proprietary
4. Description of Proposed Changes for AP1000 DCD Rev. 18, Non-Proprietary
5. DCD Pages

cc:	D. Jaffe	-	U.S. NRC	5E
	E. McKenna	-	U.S. NRC	5E
	T. Spink	-	TVA	5E
	P. Hastings	-	Duke Power	5E
	R. Kitchen	-	Progress Energy	5E
	A. Monroe	-	SCANA	5E
	P. Jacobs	-	Florida Power & Light	5E
	C. Pierce	-	Southern Company	5E
	E. Schmiech	-	Westinghouse	5E
	G. Zinke	-	NuStart/Entergy	5E
	R. Grumbir	-	NuStart	5E
	M. Melton	-	Westinghouse	5E

ENCLOSURE 1

AW-10-2830

APPLICATION FOR WITHHOLDING
PROPRIETARY INFORMATION FROM DISCLOSURE

Westinghouse Electric Company
Nuclear Services
P.O. Box 355
Pittsburgh, Pennsylvania 15230-0355
USA

U.S. Nuclear Regulatory Commission
ATTENTION: Document Control Desk
Washington, D.C. 20555

Direct tel: 412-374-6206
Direct fax: 412-374-5005
e-mail: sisk1rb@westinghouse.com

Your ref: Docket Number 52-006
Our ref: AW-10-2830

June 14, 2010

APPLICATION FOR WITHHOLDING PROPRIETARY INFORMATION FROM PUBLIC DISCLOSURE

Subject: Information on Proposed Changes for the AP1000 Design Control Document Rev. 18

The Application for Withholding is submitted by Westinghouse Electric Company LLC (Westinghouse), pursuant to the provisions of Paragraph (b) (1) of Section 2.390 of the Commission's regulations. It contains commercial strategic information proprietary to Westinghouse and customarily held in confidence.

The proprietary material for which withholding is being requested is identified in the proprietary version of the subject report. In conformance with 10 CFR Section 2.390, Affidavit AW-10-2830 accompanies this Application for Withholding, setting forth the basis on which the identified proprietary information may be withheld from public disclosure.

Accordingly, it is respectively requested that the subject information which is proprietary to Westinghouse be withheld from public disclosure in accordance with 10 CFR Section 2.390 of the Commission's regulations.

Correspondence with respect to this Application for Withholding or the accompanying affidavit should reference AW-10-2830 and should be addressed to James A. Gresham, Manager, Regulatory Compliance and Plant Licensing, Westinghouse Electric Company LLC, P.O. Box 355, Pittsburgh, Pennsylvania, 15230-0355.

Very truly yours,

James W. Winters
Manager
Passive Plant Technology

0557ljb.doc

ENCLOSURE 2

Affidavit

AW-10-2830
June 10, 2010

AFFIDAVIT

COMMONWEALTH OF PENNSYLVANIA:

ss

COUNTY OF BUTLER:

Before me, the undersigned authority, personally appeared James W. Winters, who, being by me duly sworn according to law, deposes and says that he is authorized to execute this Affidavit on behalf of Westinghouse Electric Company LLC (Westinghouse), and that the averments of fact set forth in this Affidavit are true and correct to the best of his knowledge, information, and belief:

James W. Winters
Manager
Passive Plant Technology

Sworn to and subscribed
before me this 14th day
of June 2010.

COMMONWEALTH OF PENNSYLVANIA
Notarial Seal
Linda J. Bugle, Notary Public
City of Pittsburgh, Allegheny County
My Commission Expires June 18, 2013
Member, Pennsylvania Association of Notaries

Notary Public

0557ljb.doc

(1) I am Manager, Passive Plant Technology, Westinghouse Electric Company LLC (Westinghouse), and as such, I have been specifically delegated the function of reviewing the proprietary information sought to be withheld from public disclosure in connection with nuclear power plant licensing and rule making proceedings, and am authorized to apply for its withholding on behalf of Westinghouse.

(2) I am making this Affidavit in conformance with the provisions of 10 CFR Section 2.390 of the Commission's regulations and in conjunction with the Westinghouse "Application for Withholding" accompanying this Affidavit.

(3) I have personal knowledge of the criteria and procedures utilized by Westinghouse in designating information as a trade secret, privileged or as confidential commercial or financial information.

(4) Pursuant to the provisions of paragraph (b)(4) of Section 2.390 of the Commission's regulations, the following is furnished for consideration by the Commission in determining whether the information sought to be withheld from public disclosure should be withheld.

(i) The information sought to be withheld from public disclosure is owned and has been held in confidence by Westinghouse.

(ii) The information is of a type customarily held in confidence by Westinghouse and not customarily disclosed to the public. Westinghouse has a rational basis for determining the types of information customarily held in confidence by it and, in that connection, utilizes a system to determine when and whether to hold certain types of information in confidence. The application of that system and the substance of that system constitutes Westinghouse policy and provides the rational basis required.

Under that system, information is held in confidence if it falls in one or more of several types, the release of which might result in the loss of an existing or potential competitive advantage, as follows:

(a) The information reveals the distinguishing aspects of a process (or component, structure, tool, method, etc.) where prevention of its use by any of Westinghouse's competitors without license from Westinghouse constitutes a competitive economic advantage over other companies.

(b) It consists of supporting data, including test data, relative to a process (or component, structure, tool, method, etc.), the application of which data secures a competitive economic advantage, e.g., by optimization or improved marketability.

(c) Its use by a competitor would reduce his expenditure of resources or improve his competitive position in the design, manufacture, shipment, installation, assurance of quality, or licensing a similar product.

(d) It reveals cost or price information, production capacities, budget levels, or commercial strategies of Westinghouse, its customers or suppliers.

(e) It reveals aspects of past, present, or future Westinghouse or customer funded development plans and programs of potential commercial value to Westinghouse.

(f) It contains patentable ideas, for which patent protection may be desirable.

There are sound policy reasons behind the Westinghouse system which include the following:

(a) The use of such information by Westinghouse gives Westinghouse a competitive advantage over its competitors. It is, therefore, withheld from disclosure to protect the Westinghouse competitive position.

(b) It is information that is marketable in many ways. The extent to which such information is available to competitors diminishes the Westinghouse ability to sell products and services involving the use of the information.

(c) Use by our competitor would put Westinghouse at a competitive disadvantage by reducing his expenditure of resources at our expense.

(d) Each component of proprietary information pertinent to a particular competitive advantage is potentially as valuable as the total competitive advantage. If competitors acquire components of proprietary information, any one component

may be the key to the entire puzzle, thereby depriving Westinghouse of a competitive advantage.

(e) Unrestricted disclosure would jeopardize the position of prominence of Westinghouse in the world market, and thereby give a market advantage to the competition of those countries.

(f) The Westinghouse capacity to invest corporate assets in research and development depends upon the success in obtaining and maintaining a competitive advantage.

(iii) The information is being transmitted to the Commission in confidence and, under the provisions of 10 CFR Section 2.390, it is to be received in confidence by the Commission.

(iv) The information sought to be protected is not available in public sources or available information has not been previously employed in the same original manner or method to the best of our knowledge and belief.

(v) The proprietary information sought to be withheld in this submittal is that which is appropriately marked in "Information on Proposed Changes for the AP1000 Design Control Document Rev. 18" in support of the AP1000 Design Certification Amendment Application, being transmitted by Westinghouse letter (DCP_NRC_002909) and Application for Withholding Proprietary Information from Public Disclosure, to the Document Control Desk. The proprietary information as submitted by Westinghouse for the AP1000 Design Certification Amendment application is expected to be applicable in all licensee submittals referencing the AP1000 Design Certification and the AP1000 Design Certification Amendment Application in response to certain NRC requirements for justification of compliance of the safety system to regulations.

This information is part of that which will enable Westinghouse to:

(a) Manufacture and deliver products to utilities based on proprietary designs.

(b) Advance the AP1000 Design and reduce the licensing risk for the application of the AP1000 Design Certification

(c) Determine compliance with regulations and standards

(d) Establish design requirements and specifications for the system.

Further this information has substantial commercial value as follows:

(a) Westinghouse plans to sell the use of similar information to its customers for purposes of plant construction and operation.

(b) Westinghouse can sell support and defense of safety systems based on the technology in the reports.

(c) The information requested to be withheld reveals the distinguishing aspects of an approach and schedule which was developed by Westinghouse.

Public disclosure of this proprietary information is likely to cause substantial harm to the competitive position of Westinghouse because it would enhance the ability of competitors to provide similar digital technology safety systems and licensing defense services for commercial power reactors without commensurate expenses. Also, public disclosure of the information would enable others to use the information to meet NRC requirements for licensing documentation without purchasing the right to use the information.

The development of the technology described in part by the information is the result of applying the results of many years of experience in an intensive Westinghouse effort and the expenditure of a considerable sum of money.

In order for competitors of Westinghouse to duplicate this information, similar technical programs would have to be performed and a significant manpower effort, having the requisite talent and experience, would have to be expended.

Further the deponent sayeth not.

PROPRIETARY INFORMATION NOTICE

Transmitted herewith are proprietary and/or non-proprietary versions of documents furnished to the NRC in connection with requests for generic and/or plant-specific review and approval.

In order to conform to the requirements of 10 CFR 2.390 of the Commission's regulations concerning the protection of proprietary information so submitted to the NRC, the information which is proprietary in the proprietary versions is contained within brackets, and where the proprietary information has been deleted in the non-proprietary versions, only the brackets remain (the information that was contained within the brackets in the proprietary versions having been deleted). The justification for claiming the information so designated as proprietary is indicated in both versions by means of lower case letters (a) through (f) located as a superscript immediately following the brackets enclosing each item of information being identified as proprietary or in the margin opposite such information. These lower case letters refer to the types of information Westinghouse customarily holds in confidence identified in Sections (4)(ii)(a) through (4)(ii)(f) of the affidavit accompanying this transmittal pursuant to 10 CFR 2.390(b)(1).

COPYRIGHT NOTICE

The reports transmitted herewith each bear a Westinghouse copyright notice. The NRC is permitted to make the number of copies of the information contained in these reports which are necessary for its internal use in connection with generic and plant-specific reviews and approvals as well as the issuance, denial, amendment, transfer, renewal, modification, suspension, revocation, or violation of a license, permit, order, or regulation subject to the requirements of 10 CFR 2.390 regarding restrictions on public disclosure to the extent such information has been identified as proprietary by Westinghouse, copyright protection notwithstanding. With respect to the non-proprietary versions of these reports, the NRC is permitted to make the number of copies beyond those necessary for its internal use which are necessary in order to have one copy available for public viewing in the appropriate docket files in the public document room in Washington, DC and in local public document rooms as may be required by NRC regulations if the number of copies submitted is insufficient for this purpose. Copies made by the NRC must include the copyright notice in all instances and the proprietary notice if the original was identified as proprietary.

ENCLOSURE 4

Description of Proposed Changes for AP1000 DCD Rev. 18, Non-Proprietary

Change No. 67

Subject

Change to Blind Flange Closures

DCD Sections Impacted

Tier 1:
None

Tier 2:
Figure 1.7-2 (sh 2/3)
Figure 5.1-5 (sh 3/3)
Figure 5.4-7
Figure 6.3-1
Figure 6.3-2
Figure 6.4-2 (sh 2/2)
Figure 9.3.6-1 (sh 1, 2/2)
Figure 10.3.2-1 (1, 2/2)

Description of change to DCD/Reason for change to DCD

Description of DCD Change
Added symbol to Piping Legend - Figure 1.7-2
Changed DCD P&ID to show pipe/tubing plug for multiple lines - Figure 5.1-5, Figure 5.4-7, Figure 6.3-1, Figure 6.3-2, Figure 6.4-2, Figure 9.3.6-1 & Figure 10.3.2-1

Description of Design Change
Change the method of closures for multiple lines from blind flanges and threaded caps to pipe/tubing plugs.

a, c

ISG-11 Review Results

Must the change be included in the next DCD Revision?	☒ Yes ☐ No

ENCLOSURE 5

DCD Pages

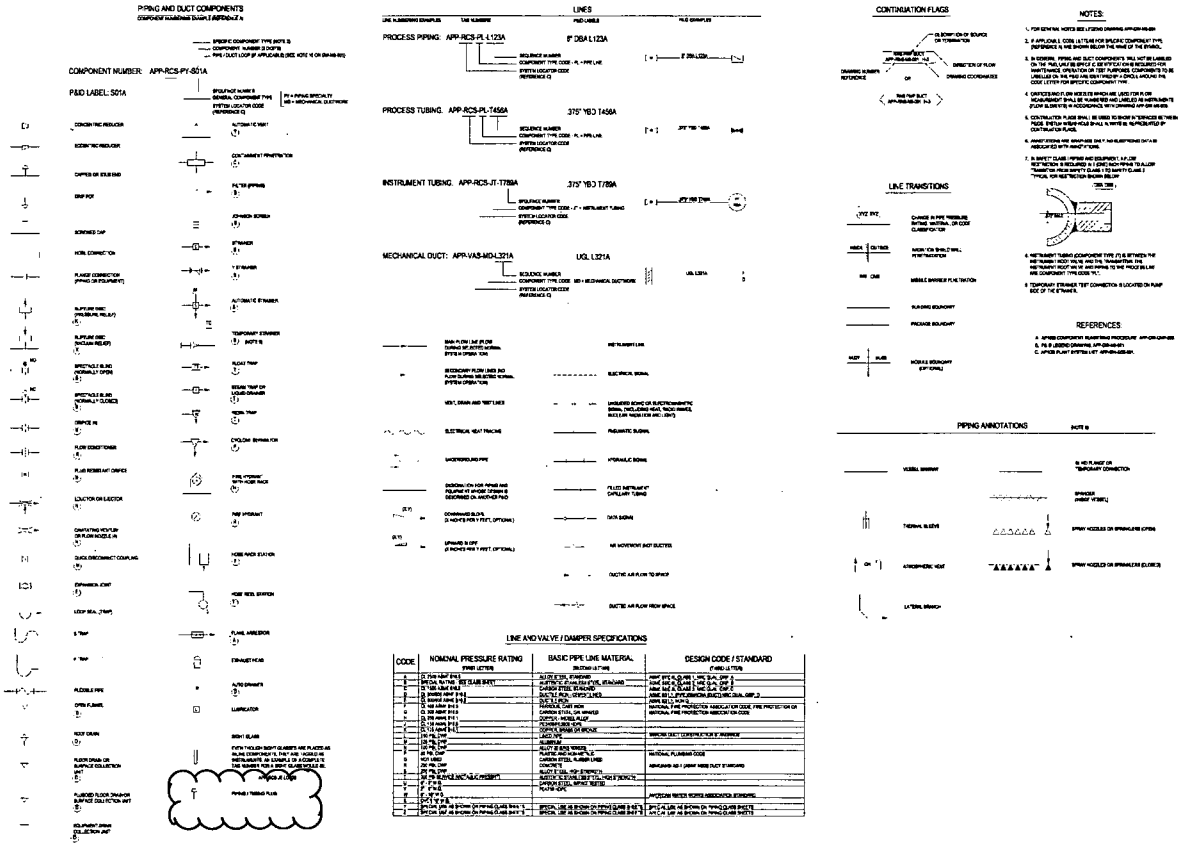

Figure 1.7-2 (Sheet 2 of 3)

Piping and Instrumentation Diagram Legend

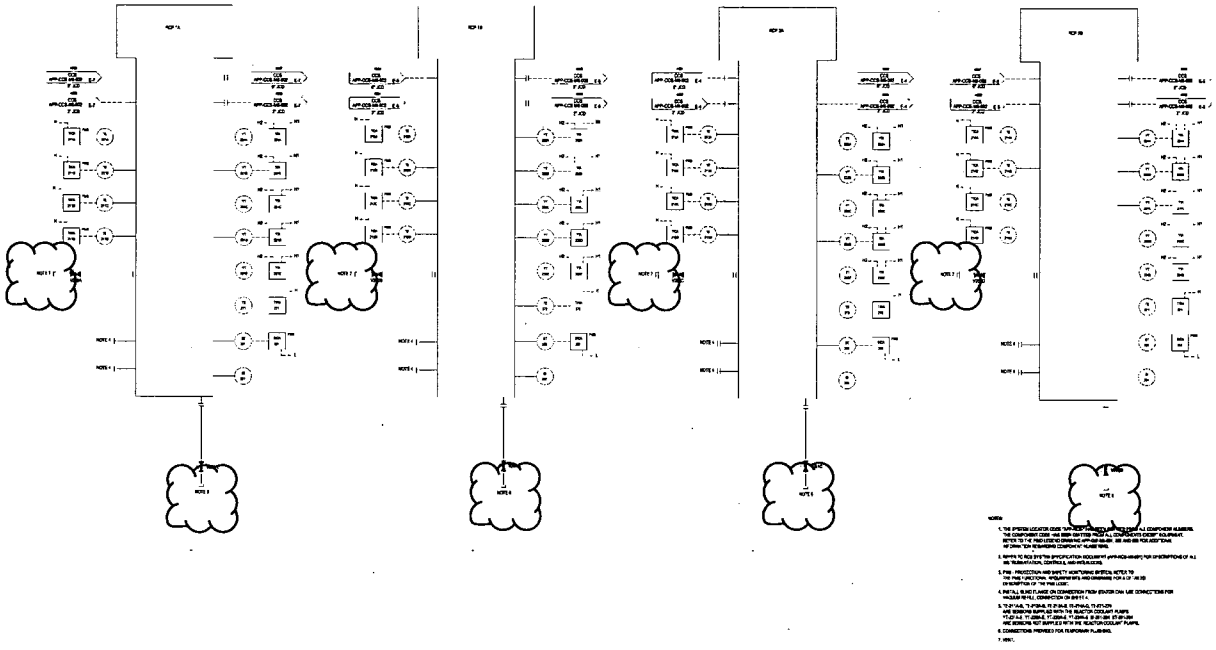

Inside Reactor Containment
Figure 5.1-5 (Sheet 3 of 3)

Reactor Coolant System
Piping and Instrumentation Diagram

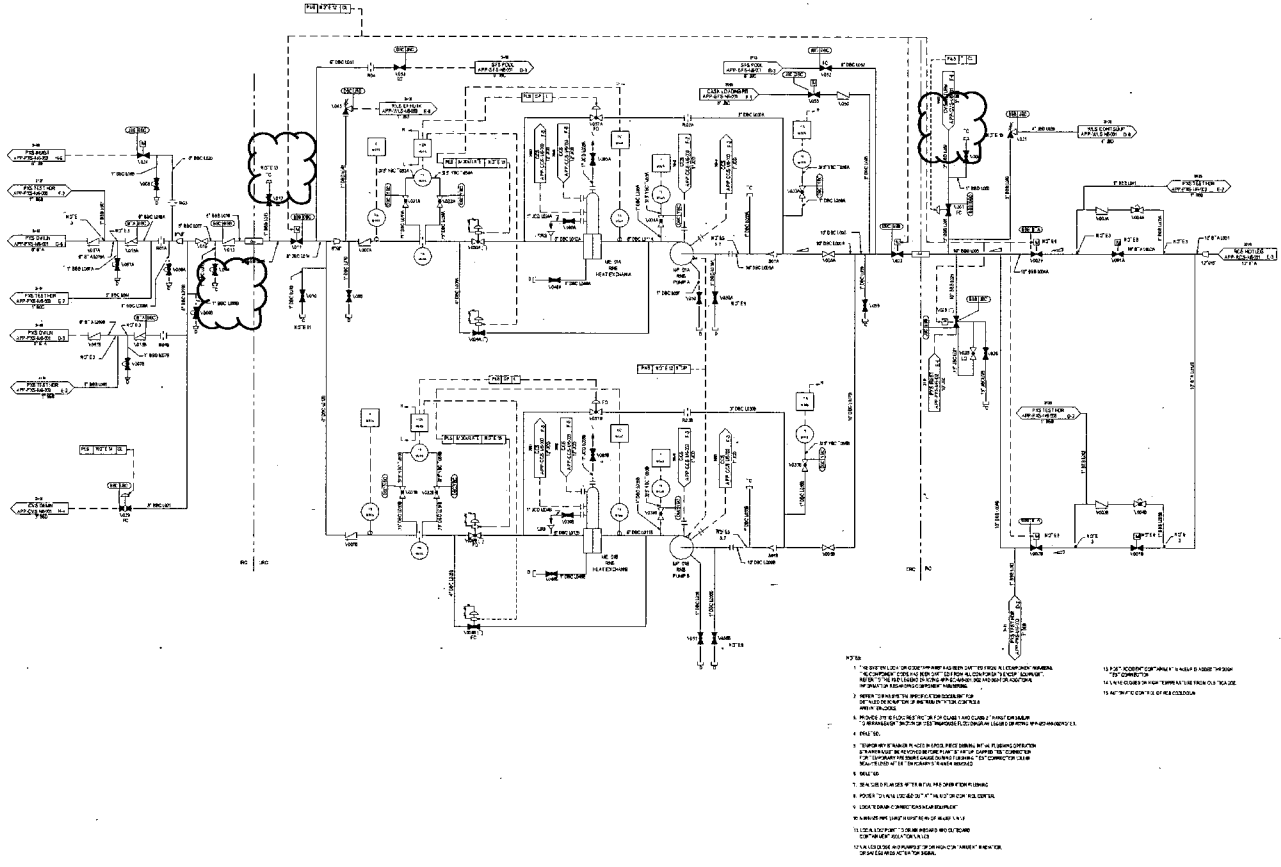

Figure 5.4-7

Normal Residual Heat Removal System Piping and Instrument Diagram

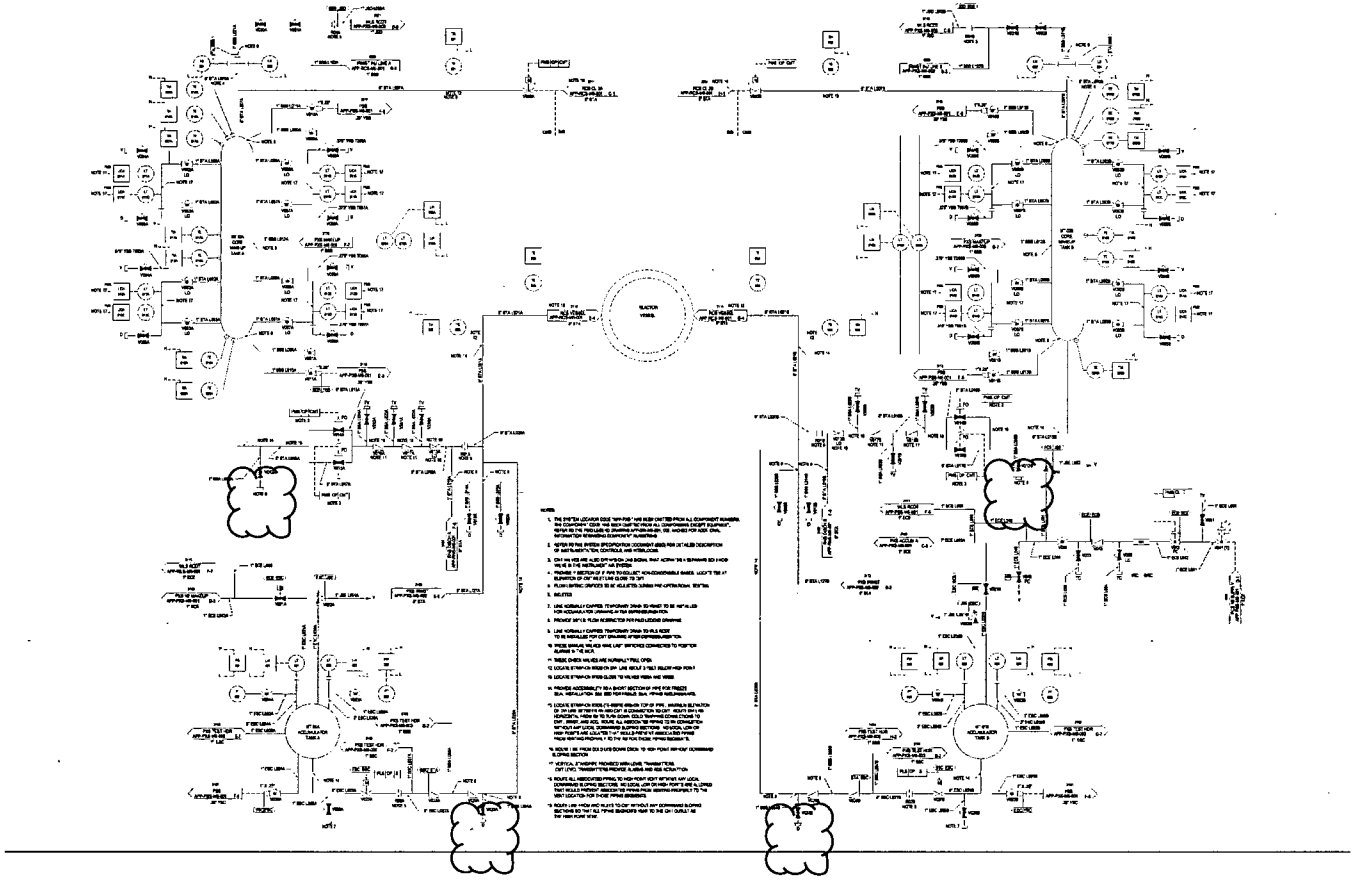

Figure 6.3-1

Passive Core Cooling System
Piping and Instrumentation Diagram (Sheet 1)

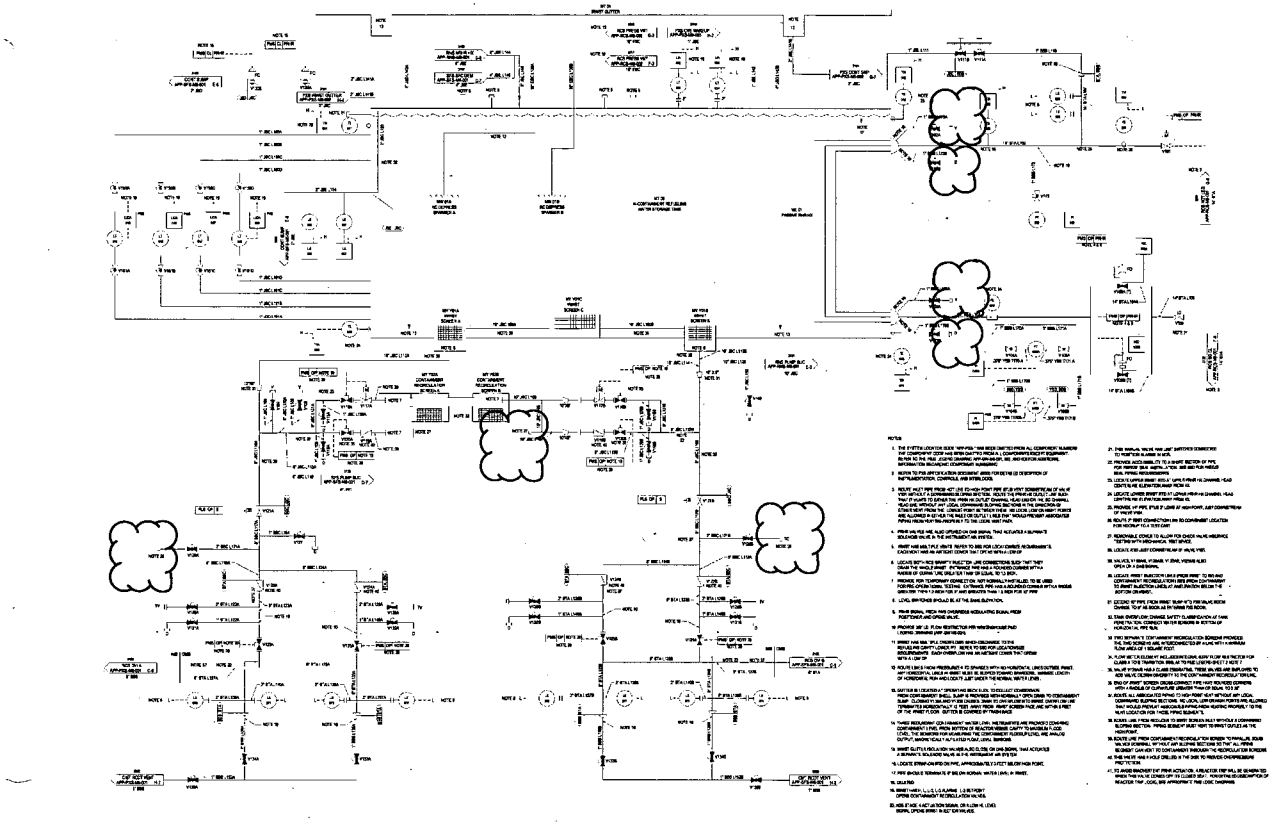

Figure 6.3-2

Passive Core Cooling System
Piping and Instrumentation Diagram (Sheet 2)

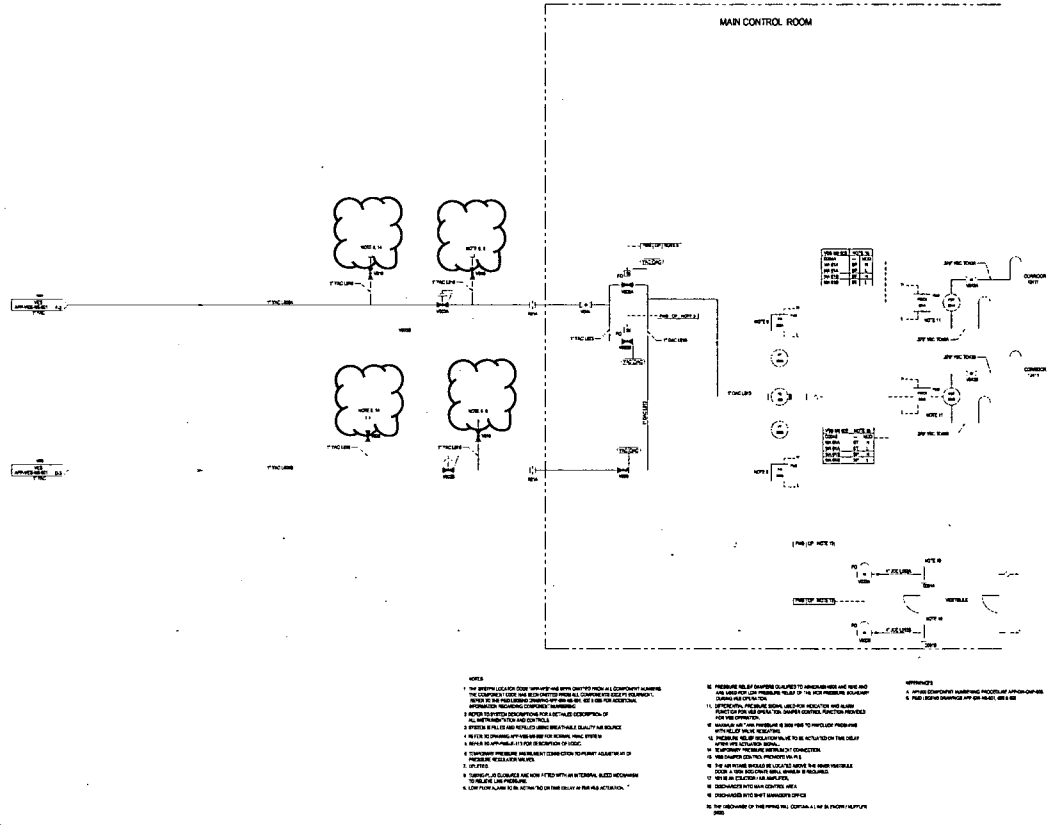

Figure 6.4-2 (Sheet 2 of 2)

Main Control Room Habitability System
Piping and Instrumentation Diagram

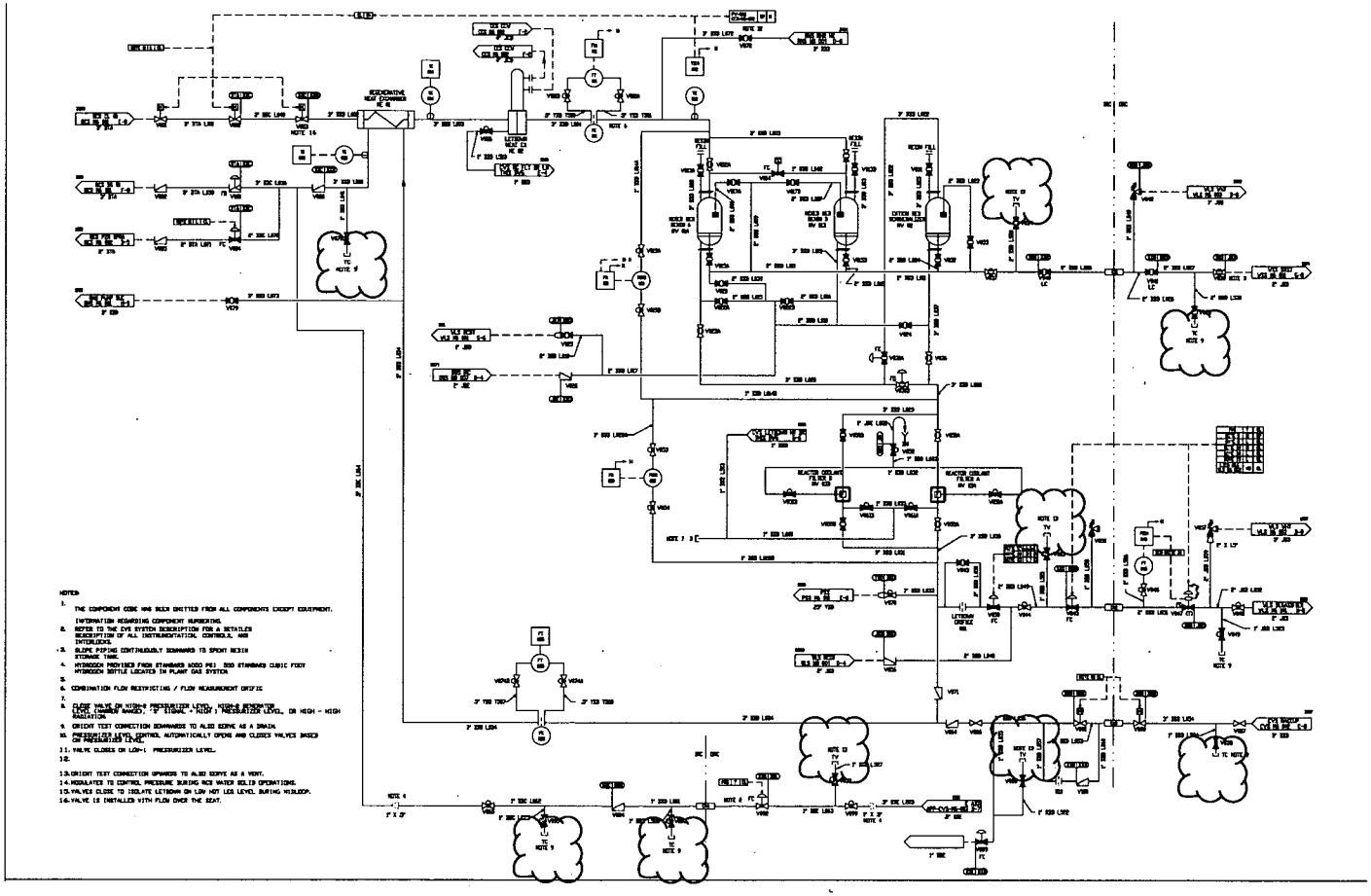

Figure 9.3.6-1 (Sheet 1 of 2)

Figure represents system functional arrangement. Details internal to the system may differ as a result of implementation factors such as vendor-specific component requirements.

Chemical and Volume Control System Piping and Instrumentation Diagram (REF) CVS 001

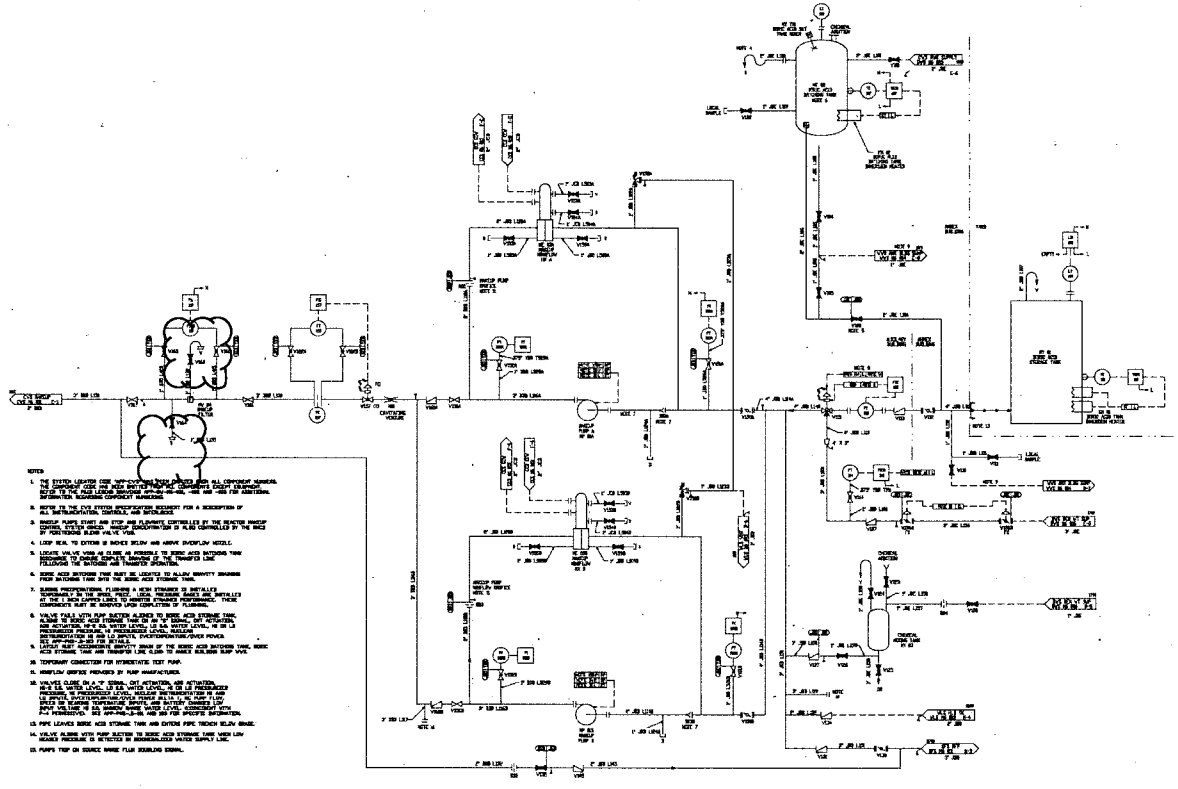

Figure 9.3.6-1 (Sheet 2 of 2)

Chemical and Volume Control System Piping and Instrumentation Diagram (REF) CVS 002

Figure represents system functional arrangement. Details internal to the system may differ as a result of implementation factors such as vendor-specific component requirements.

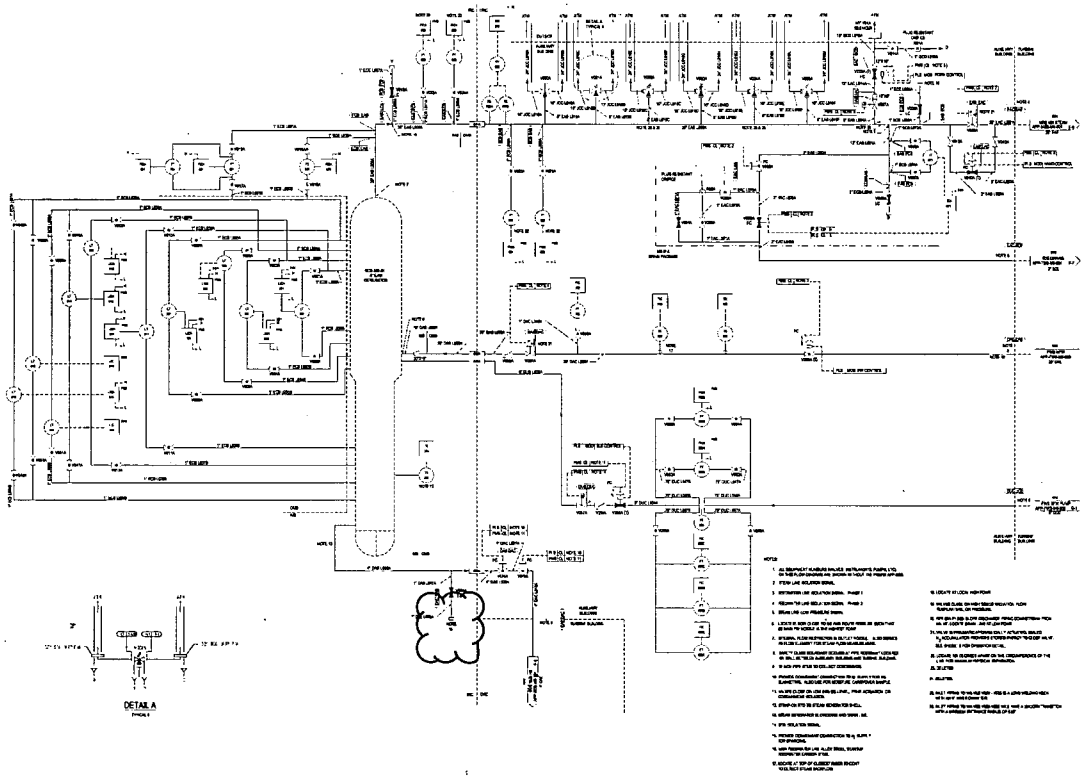

Figure 10.3.2-1 (Sheet 1 of 2)

Main Steam Piping and Instrumentation Diagram (Safety-Related System) (REF) SGS 001

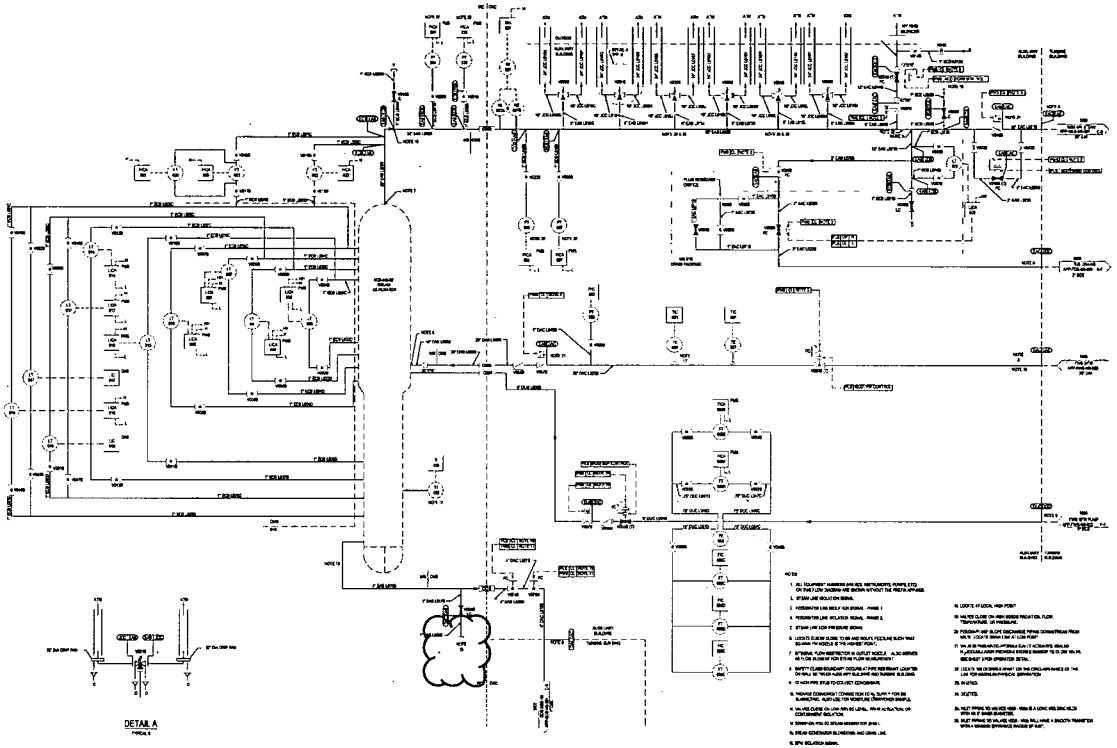

Figure 10.3.2-1 (Sheet 2 of 2)

Main Steam Piping and Instrumentation Diagram (Safety Related System) (REF) SGS 002