ArevaEPRDCPEm Resource

From: BRYAN Martin (EXT) [Martin.Bryan.ext@areva.com]
Sent: Friday, June 11, 2010 2:26 PM
To: Tesfaye, Getachew
Cc: BALLARD Robert W (AREVA NP INC); CONNELL Kevin J (AREVA NP INC); ROMINE Judy (AREVA NP INC); COLEMAN Sue H (AREVA NP INC); WILLIFORD Dennis C (AREVA NP INC); KOWALSKI David J (AREVA NP INC); GARDNER George Darrell (AREVA NP INC); PATTON Jeff (AREVA NP INC); SANDERS Harris I (AREVA NP INC)
Subject: DRAFT Response to U.S. EPR Design Certification Application RAI No. 294, FSAR Ch. 10, Supplement 4
Attachments: RAI 294 Supplement 4 Response US EPR DC - DRAFT.pdf

Getachew,

Attached is a draft RAI 294 Supplement 4 response. Earlier today, AREVA submitted RAI 294 Supplement 3 that provided a final response date of July 14, 2010. Let me know if an interaction is needed on this material as these responses have not had much previous staff review.

Thanks,

Martin (Marty) C. Bryan
U.S. EPR Design Certification Licensing Manager
AREVA NP Inc.
Tel: (434) 832-3016
702 561-3528 cell
Martin.Bryan.ext@areva.com

Hearing Identifier: AREVA_EPR_DC_RAIs
Email Number: 1539

Mail Envelope Properties (BC417D9255991046A37DD56CF597DB71067ECAEB)

Subject: DRAFT Response to U.S. EPR Design Certification Application RAI No. 294, FSAR Ch. 10, Supplement 4
Sent Date: 6/11/2010 2:26:26 PM
Received Date: 6/11/2010 2:27:57 PM
From: BRYAN Martin (EXT)

Created By: Martin.Bryan.ext@areva.com

Recipients:
"BALLARD Robert W (AREVA NP INC)" <Robert.Ballard@areva.com>
Tracking Status: None
"CONNELL Kevin J (AREVA NP INC)" <Kevin.Connell@areva.com>
Tracking Status: None
"ROMINE Judy (AREVA NP INC)" <Judy.Romine@areva.com>
Tracking Status: None
"COLEMAN Sue H (AREVA NP INC)" <Sue.Coleman@areva.com>
Tracking Status: None
"WILLIFORD Dennis C (AREVA NP INC)" <Dennis.Williford@areva.com>
Tracking Status: None
"KOWALSKI David J (AREVA NP INC)" <David.Kowalski@areva.com>
Tracking Status: None
"GARDNER George Darrell (AREVA NP INC)" <Darrell.Gardner@areva.com>
Tracking Status: None
"PATTON Jeff (AREVA NP INC)" <Jeff.Patton@areva.com>
Tracking Status: None
"SANDERS Harris I (AREVA NP INC)" <Harris.Sanders@areva.com>
Tracking Status: None
"Tesfaye, Getachew" <Getachew.Tesfaye@nrc.gov>
Tracking Status: None

Post Office: AUSLYNCMX02.adom.ad.corp

Files	**Size**	**Date & Time**
MESSAGE	509	6/11/2010 2:27:57 PM
RAI 294 Supplement 4 Response US EPR DC - DRAFT.pdf	1923702	

Options
Priority: Standard
Return Notification: No
Reply Requested: No
Sensitivity: Normal
Expiration Date:
Recipients Received:

Response to

Request for Additional Information No. 294 (3758), Supplement 4

10/5/2009

U.S. EPR Standard Design Certification
AREVA NP Inc.
Docket No. 52-020
SRP Section: 10.02.03 - Turbine Rotor Integrity
Application Section: 10.2.3

QUESTIONS for Component Integrity, Performance, and Testing Branch 1
(AP1000/EPR Projects) (CIB1)

DRAFT

Question 10.02.03-17:

POTENTIAL OPEN ITEM

In response to RAI No. 100, Question 10.02.03-1, the applicant responded that the COL applicant will procure a turbine that meets or exceeds the FSAR bounding specifications, or provide suitable justification for the departure. The staff notes that the FSAR does not provide applicable material specifications for procuring the turbine rotors and, therefore, the staff requests that the applicable material specifications be included in the FSAR in order to determine if the chemical composition (i.e., limiting trace elements, etc.) will improve fracture toughness, along with any operating experience of these materials. In addition, the description of the procedures used to minimize flaws, improve toughness, and minimize chemical segregation should be discussed as requested in the above RAI.

Response to Question 10.02.03-17:

The materials used in the high/intermediate pressure (HIP) and low pressure (LP) rotors are the manufacturer's standard material for turbine rotors. The materials specifications are not identical to ASTM standards. The chemical compositions and mechanical properties used for the turbine rotors are given in the following tables:

- Table 10.02.03-17-1—HIP Rotor.
- Table 10.02.03-17-2—High Pressure (HP) Rotor.
- Table 10.02.03-17-3—Intermediate Pressure (IP) Discs and Shaft End.
- Table 10.02.03-17-4—LP Rotors.

U.S. EPR FSAR Tier 2, Section 10.2.3.1 will be revised to include the following three new tables, which contain the chemical compositions and mechanical properties used for the turbine rotors:

- U.S. EPR FSAR Tier 2, Table 10.2-3—HP Rotor.
- U.S. EPR FSAR Tier 2, Table 10.2-4—IP Discs and Shaft End.
- U.S. EPR FSAR Tier 2, Table 10.2-5—LP Rotor.

U.S. EPR FSAR Tier 2, Section 10.2.5 and Table 10.2-2—Turbine-Generator Material Data will be revised to reflect the information in the three new tables.

Rotor forgings procurement is based on the requirements from the turbine supplier's material specification, similar in scope to the requirements of ASTM A 470, Section 4. For each foundry identified as a potential supplier, a product qualification with specific stringent requirements is performed to validate the forging process. Results are controlled by a Manufacturing Inspection and Control Process Plan. As a minimum, this includes the following information:

- Steelmaking method, including deoxidation and degassing practice.
- Pouring practice.
- Ingot hot topping practice.
- Aim composition of the specified elements.

DRAFT

- Ingot and head weights and dimensions.
- Ingot discards top and bottom.
- Orientation of the forging with respect to the ingot.
- Number of forgings to be manufactured from the ingot, if more than one state positions.
- Sketch of forging sequence, including forging dimensions and outline shape after each operation and final forging weight.
- Details of the preliminary heat treatment cycle.
- Sketch of forging profile for quality heat treatment, including location of thermocouples on the forging and statement of forging orientation for heat treatment.
- Details of the quality heat treatment cycle, including temperatures and soak times, method of cooling, whether forging is static or rotated and terminal temperatures.
- Sketches of forging profile for ultrasonic examinations.
- Sketch of forging profile showing location of test material and tests to be undertaken.
- Standards to be used for tensile and Charpy V-notch tests.
- Sequence of manufacturing operations, heat treatments, mechanical tests, and non-destructive examination.

Any deviation or planned departure from the approved Manufacturing Inspection and Control Process Plan is submitted to the turbine supplier for approval prior to implementation.

Operating experience for each material used for the turbine rotors includes the following:

HIP Rotor Material:

- Four HIP rotors in France (Chooz and Civaux) with 252,000 cumulated operating hours for the four units at the end of June 2008.
- Twenty-two LP rotors in France and Belgium (CP1 steam turbines) with 533,000 cumulated operating hours for the seven units at the end of June 2008.
- San Onofre 2 and 3 (six LP rotors) in the U.S. with 140,000 cumulated operating hours for the two units at the end of October 2008.

LP Rotor Material:

- Four LP rotors in France (Chooz and Civaux) with 252,000 cumulated operating hours for the four units at the end of June 2008.
- Twenty four LP rotors in France and Belgium (CP2 steam turbines) with 1,640,000 cumulated operating hours for the 12 units at the end of December 2007.
- Sixty LP rotors in France (P4 steam turbines) with 2,730,000 cumulated operating hours for the 20 units at the end of December 2007.
- Uljin in South Korea with 300,000 cumulated operating hours for the two units estimated at the end of 2008.

DRAFT

- Retrofit of Diablo Canyon, Callaway and Fort Calhoun in the U.S. The unit at Diablo Canyon went into service at the end of 2005.

FSAR Impact:

U.S. EPR FSAR Tier 2, Section 10.2.3.1, Section 10.2.5, and Table10.2-2 will be revised as described in the response and indicated on the enclosed markup.

U.S. EPR FSAR Tier 2, Table 10.2-3, Table 10.2-4, and Table 10.2-5 will be added as described in the response and indicated on the enclosed markup.

DRAFT

Table 10.02.03-17-1—HIP Rotor

Material designation	22NiCrMoV12-7
Material type	Low alloy steel
Applicable product form(s)	Forgings

Table 10.02.03-17-2—HP Rotor

Chemical Composition of Cast – Weight %			
Element	**Symbol**	**Minimum**	**Maximum**
Carbon	C	0.20	0.25
Silicon	Si	0.10	0.40
Manganese	Mn	0.40	0.80
Phosphorous	P	-	0.012
Sulfur	S	-	0.012
Nickel	Ni	2.80	3.20
Chromium	Cr	1.50	2.00
Molybdenum	Mo	0.40	0.60
Vanadium	V	-	0.11
Copper	Cu	-	0.12
Phosphorous + Tin	P + Sn	-	0.018
Arsenic	As	-	0.018
Antimony	Sb	-	0.003
Aluminum	Al	-	0.015

Mechanical Property Requirements at 23°C ± 5°C at Rim and Subsurface Test Locations				
Heat Treatment Stage		**After Post-Weld Heat Treatment**		
Property	**Unit**	**Orientation**	**Minimum**	**Maximum**
Tensile Strength	N/mm^2	Long. / Transv.	660	-
0.2% Proof Strength	N/mm^2	Long. / Transv.	550	650
Elongation on 5.65 √So	%	Long. / Transv.	15 / 14	-
Reduction of Area	%	Long. / Transv.	50	-

Notch Impact Property Requirements at Rim and Subsurface Test Locations				
Heat Treatment Stage		**Delivery Condition and After Post-Weld Heat Treatment**		
Property	**Unit**	**Orientation**	**Minimum**	**Maximum**
Notch Impact Strength at Minimum Operating Temperature	J	Transv.	81	-
FATT (50%)	°C	Long. / Transv.	-	-30

DRAFT

Table 10.02.03-17-3—IP Discs and Shaft End

Chemical Composition of Cast – Weight %			
Element	**Sym-bol**	**Minimum**	**Maximum**
Carbon	C	0.20	0.25
Silicon	Si	0.10	0.40
Manganese	Mn	0.40	0.80
Phosphorous	P	-	0.012
Sulfur	S	-	0.012
Nickel	Ni	2.80	3.20
Chromium	Cr	1.50	2.00
Molybdenum	Mo	0.40	0.60
Vanadium	V	-	0.11
Copper	Cu	-	0.12
Phosphorous + Tin	P + Sn	-	0.018
Arsenic	As	-	0.018
Antimony	Sb	-	0.003
Aluminum	Al	-	0.015

Mechanical Property Requirements at 23°C ± 5°C at rim and subsurface test locations				
Heat Treatment Stage		**After Post-Weld Heat Treatment**		
Property	**Unit**	**Orientation**	**Minimum**	**Maximum**
Tensile Strength	N/mm^2	Long. / Transv.	740	880
0.2% Proof Strength	N/mm^2	Long. / Transv.	635	-
Elongation on 5.65 √So	%	Long. / Transv.	15 / 14	-
Reduction of Area	%	Long. / Transv.	50	-

Notch Impact Property Requirements at rim and subsurface test locations				
Heat Treatment Stage		**Delivery Condition and After Post-Weld Heat Treatment**		
Property	**Unit**	**Orientation**	**Minimum**	**Maximum**
Notch Impact Strength at Minimum Operating Temperature	J	Transv.	81	-
FATT (50%)	°C	Long. / Transv.	-	-30

DRAFT

Table 10.02.03-17-4—LP Rotors

Material designation	**23CrNiMo7-4**			
Material type	**Low alloy steel**			
Applicable product form(s)	**Forgings**			
Chemical Composition of Cast – Weight %				
Element	**Symbol**	**Minimum**	**Maximum**	
Carbon	C	0.20	0.26	
Silicon	Si	-	0.30	
Manganese	Mn	0.50	0.80	
Phosphorous	P	-	0.010	
Sulfur	S	-	0.015	
Nickel	Ni	0.90	1.20	
Chromium	Cr	1.70	2.00	
Molybdenum	Mo	0.60	0.80	
Vanadium	V	-	0.050	
Phosphorous + Tin	P + Sn	-	0.020	
Mechanical Property Requirements at 23°C ± 5°C at rim and subsurface test locations				
Heat Treatment Stage	**Delivery Condition and After Post-Weld Heat Treatment**			
Property	**Unit**	**Orientation**	**Minimum**	**Maximum**
Tensile Strength	N/mm^2	Long. / Transv.	740	880
0.2% Proof Strength	N/mm^2	Long. / Transv.	635	-
Elongation on 5.65 √So	%	Long. / Transv.	17 / 15	-
Reduction of Area	%	Long. / Transv.	50	-
Notch Impact Property Requirements				
Heat Treatment Stage	**Delivery Condition and After Post-Weld Heat Treatment**			
Property	**Unit**	**Orientation**	**Minimum**	**Maximum**
Notch Impact Strength at Minimum Operating Temperature	J	Transv.	81	-
FATT (50%)	°C	Long. / Transv.	-	-18

DRAFT

Question 10.02.03-18:

POTENTIAL OPEN ITEM

In response to RAI No. 100, Question 10.02.03-4, the applicant responded that the specific method to calculated fracture toughness properties of the turbine rotor from material properties tests will be identified by the COL applicant upon selection of the specific rotor design. The staff finds this acceptable, since the COL applicant will provide the specific method of calculating the fracture toughness properties depending upon the specific rotor design. However, the COL Information Item 10.2-5 in the FSAR should be revised to specify that the method of calculating the fracture toughness properties of the turbine rotor material should be provided.

Response to Question 10.02.03-18:

U.S. EPR FSAR Tier 2, Table 1.8-2—U.S. EPR Combined License Information Items, Item 10.2-2 will be revised to state:

> "A COL applicant that references the U.S. EPR design certification will provide applicable material properties of the turbine rotor, including the method of calculating the fracture toughness properties, after the site-specific turbine has been procured."

U.S. EPR FSAR Tier 2, Section 10.2.3.1 will be revised to incorporate this information.

FSAR Impact:

U.S. EPR FSAR Tier 2, Table 1.8-2 and Section 10.2.3.1 will be revised as described in the response and indicated on the enclosed markup.

DRAFT

Question 10.02.03-19:

POTENTIAL OPEN ITEM

In response to RAI No. 100, Question 10.02.03-6, the applicant replied that the high pressure part of the high/intermediate pressure (HIP) rotor assembly is one forged section. The intermediate pressure part of the HIP rotor assembly consists of three forged sections. The HIP rotor assembly is a welded rotor consisting of the four forgings. The rotors of the low pressure turbine are a welded rotor design. Based on this information, the HIP rotor assembly consists of four forged pieces welded together. However, it is not clear whether the LP rotor consists of forged pieces and the number of pieces. Therefore, the staff requests clarification of the LP rotor, including a sketch. The HIP should also be included in the sketch to understand the arrangement of the turbine rotors, including all weld locations for HIP and LP, and their accessibility for inspection.

Response to Question 10.02.03-19:

The HIP rotor is a welded rotor composed of four forgings: one high pressure (HP) forged rotor, two intermediate pressure (IP) forged discs, and one IP forged shaft end (see Figure 10.02.03-19-1).

The low pressure (LP) rotor is a welded rotor composed of ten forgings: eight forged discs and two shaft ends (see Figure 10.02.01-19-2)

FSAR Impact:

The U.S. EPR FSAR will not be changed as a result of this question.

DRAFT

Figure 10.02.03-19-1—HIP Rotor Forgings

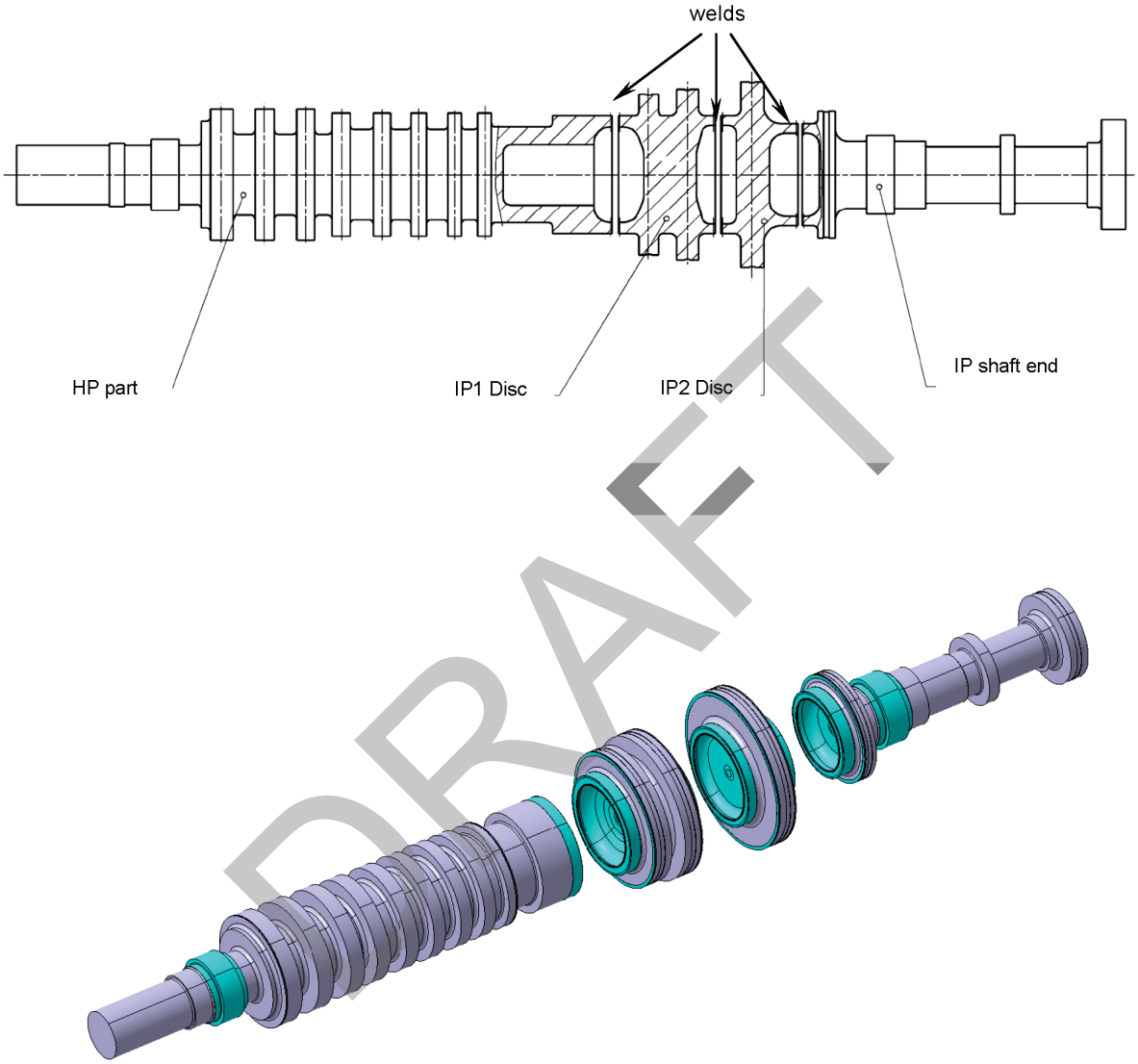

DRAFT

Figure 10.02.03-19-2—LP Rotor Forgings

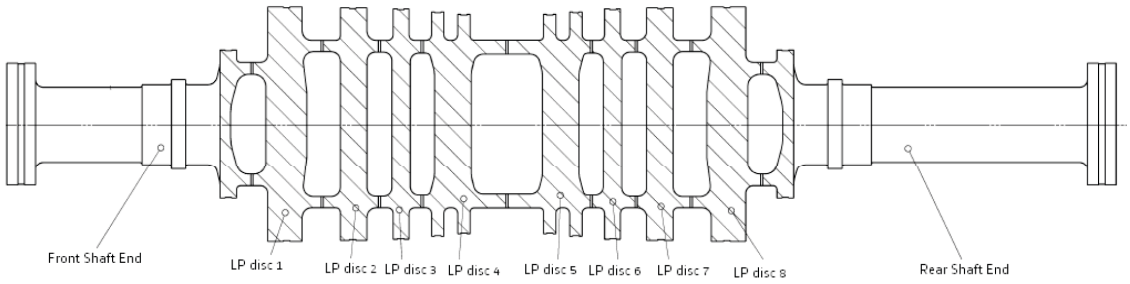

DRAFT

Question 10.02.03-20:

POTENTIAL OPEN ITEM

The applicant's response to RAI No. 100, Question 10.02.03-6, provided that, since these are weld rotors, keyways are not used as in shrunk-on turbine rotor discs. However, in response to RAI No. 100, Question 10.02.03-8, the applicant stated that holes are drilled for the pins used to fix the moving blades to the turbine rotors. These holes are drilled once the blades are assembled to the turbine rotor and, therefore, a surface examination is not performed. However, to account for not performing a magnetic-particle or liquid penetrant examination of the holes, the turbine missile analysis will account for this by considering a potential initial defect in the turbine rotor at the zero point. In addition, ultrasonic examination is performed on the forged pieces. Also, there are no finished bores in this turbine design. Based on this information, the staff needs the following information to determine whether the integrity of the turbine rotor can be determined prior to service:

a. Confirm this is a solid cored rotor (non-bored). If this is the case, provide the following:
    1. Discuss the method for obtaining, for the non-bored rotor, 100 percent ultrasonic inspection in accordance with the FSAR Tier 2, Sections 10.2.3.5 and 10.2.3.6, since there is no bore to gain access to perform the ultrasonic inspection.
    2. Typically, each fabricated rotor has destructive testing performed at various locations to ensure homogeneity and acceptable material properties. Justify that the material properties for each rotor fabricated will have the required material properties and homogeneity throughout the forged rotor, including the interior, which is normally bored out. Also, provide any supporting evaluations or tests.
b. Confirm that ultrasonic testing is performed on the forged parts after the holes are drilled. Also confirm that this inspection can detect defects at the hole region to account for not performing a magnetic-particle or liquid penetrant examination of the holes so that no flaws are allowed in the keyway and hole regions as specified in SRP 10.2.3 guidance.
c. Clarify the term "zero point" in your response to RAI No. 100, Question 10.02.03-6, and in the turbine missile analysis discuss accounting for not performing a magnetic-particle or liquid penetrant examination of the holes. Also, provide a COL information item addressing that the COL applicant's turbine missile analysis will account for not performing a magnetic-particle or liquid penetrant examination of the holes by considering a potential initial defect in the turbine rotor.

Response to Question 10.02.03-20:

a) Both the low pressure (LP) and the high/intermediate pressure (HIP) rotors are non-bored rotors. Refer to Figure 10.02.03-19-1 and Figure 10.02.03-19-2 for an illustration of the turbine rotors.
    1) Each forging is 100 percent ultrasonic tested after quality heat treatment in a machined condition and before welding. After welding, each weld in the turbine rotor assembly is subjected to 100 percent ultrasonic examination in the radial, longitudinal, and tangential directions. Both LP and HIP rotors are 100 percent ultrasonic tested.

DRAFT

The main steps in the rotor manufacturing process include the following:

- Discs forgings.
- One hundred percent ultrasonic tests.
- Pre-machining of discs (weld preparation).
- Rotor welding (discs staking plus welding).
- One hundred percent radiographic inspection of root pass weld. (Radiographic inspection will be performed after the root pass welds of the disc connections are completed in order to confirm an acceptable weld seam before a fill weld will be started.)
- One hundred percent ultrasonic test of welds.
- Rotor machining (rotor turning and machining of balancing groove and drilling of the coupling and balancing holes).

2) Each forged component constituting an LP or HIP rotor is subjected to mechanical tests as described in the Response to RAI 100, Supplement 1, Question 10.02.03-1 (tensile test, Charpy V-notch impact tests and FATT determination).

   Tests in delivered condition are tests made from test material that is not given further heat treatment after removal from the forging.

   Tests after simulated post-weld heat treatment are tests made from test material that is removed from the forging and subjected to a laboratory heat treatment simulating the post-weld heat treatment of the welded rotor.

b) The manufacturing process for the pin holes includes the following:

- Ultrasonic and magnetic particle examination of the accessible disc surfaces.
- Rotor discs milling and pre-drilling (pre-drilling of the discs for the standard blades attachment and milling of the fir tee grooves for the last stage blade (LSB) attachment).
- Cleaning of pin holes and visual inspection of the holes.
- Assembly of the pre-drilled blades.
- Reaming of the pin holes to the final diameter with assembled blade.
- Cleaning of the hole and visual inspection of the hole.
- Installation of pins.

The areas in the discs, which are drilled for the blade attachment, are ultrasonic tested before the holes are drilled. Drilling is done on a material without unacceptable defects. The blades are assembled to the disc, the pin holes are reamed, and the pins inserted. At this point, magnetic or liquid penetrant examination of the pin holes is not possible due to restricted accessibility.

Drilling on a sound material will not initiate any flaws (no surface examinations are done on machined surfaces).

DRAFT

The last two LP blades are equipped with a fir tree root attachment, which does not require pins.

Magnetic particle examination is done on the accessible external surface of the discs.

The missile analysis considers the conservative assumption of an initial existing defect in the disc when calculating the probability of missile generation.

Surface examination of the drilled holes is not considered necessary.

c) The "zero point" discussed in the Response to RAI 100, Question 10.02.03-8 means that at t = 0, an initial defect a_0 (see Figure 10.02.03-20-1) in the axial radial plane, which includes the discs fingers and lies from the disc outer diameter to the bottom of the inner pin hole, is taken into account in the missile analysis.

The turbine missile analysis accounts for not performing a magnetic-particle or liquid-penetrant examination of the drilled holes by considering a potential initial defect in the turbine rotor.

To satisfy U.S. EPR FSAR Tier 2, Table 1.8-2—U.S. EPR Combined License Information Items, Item No. 3.5-2, the COL applicant references a standard analysis that calculates the probability of turbine missile generation, which reflects this assumption. It is not necessary to prepare a new COL item that states that the "COL applicant's turbine missile analysis will account for not performing a magnetic-particle or liquid penetrant examination of the holes by considering a potential initial defect in the turbine rotor."

FSAR Impact:

The U.S. EPR FSAR will not be changed as a result of this question.

DRAFT

Table 10.02.03-20-1—Tests in Delivered Condition

Test Type	Orientation Relative to the Forging Axis
Tensile	Tangential

Table 10.02.03-20-2—Tests after Simulated Post-Weld Heat Treatment

Test Type	Orientation Relative to the Forging Axis
Tensile	Tangential
Charpy V-Notch	Tangential
FATT	Tangential

Figure 10.02.03-20-1—Initial Defect a_0

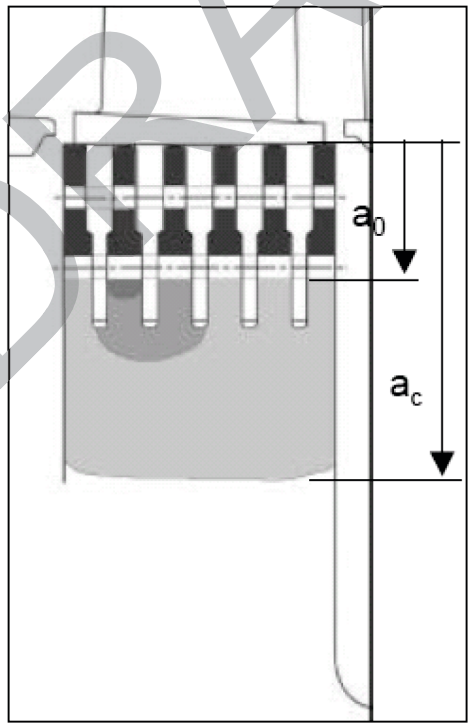

DRAFT

Question 10.02.03-21:

POTENTIAL OPEN ITEM

In response to RAI No. 100, Question 10.02.03-9, the applicant stated that each specific turbine missile analysis is a function of the selected turbine and, therefore, is a COL applicant-provided analysis. Once a specific turbine design has been selected, the COL applicant provides a design-specific turbine missile analysis as required by the ITAAC Item Nos. 1a and 1b in FSAR Tier 1, Table 2.8.1-3. Therefore, the applicant considers that the turbine rotor inservice inspection program is correctly described in the FSAR Tier 2, Sections 10.2.3.6 and 10.2A.3.6, and associated ITAAC. The NRC staff notes that Section 10.2A.3.6 did specify that the COL applicant will provide the inspection program. However, Section 10.2A has been deleted, since an alternate turbine design will not be used. However, FSAR Tier 2, Section 10.2.3.6 for the standard turbine design only requires that the COL applicant provide the inspection interval, not the inspection program (which includes the types of inspections, extent of inspections, acceptance criteria, and inspection intervals). Therefore, the NRC staff requests that COL Information Item 10.2-5 for the standard turbine design in Table 1.8-2 of the FSAR Tier 2, be revised to state the inspection "program" and "interval" to ensure the COL applicant, submits the required information for the staff to review during the COL review.

Response to Question 10.02.03-21:

U.S. EPR FSAR Tier 2, Table 1.8-2—U.S. EPR Combined License Information Items, Item 10.2-5 will be revised to state:

> "A COL applicant that references the U.S. EPR design certification will provide the site-specific turbine rotor inservice inspection program and inspection interval consistent with the manufacturer's turbine missile analysis."

U.S. EPR FSAR Tier 2, Section 10.2.3.6 will be revised to reflect this information.

FSAR Impact:

U.S. EPR FSAR Tier 2, Table 1.8-2 and Section 10.2.3.6 will be revised as described in the response and indicated on the enclosed markup.

DRAFT

Question 10.02.03-22:

POTENTIAL OPEN ITEM

In response to RAI No. 100, Question 10.02.03-9, the applicant replied that volumetric examination is not a standard inservice inspection, but it is performed if any indications are identified during visual and surface examination. The staff notes that visual and surface examination does not provide 100 percent volumetric inspection of the turbine rotors to ensure that defects such as cracks are discovered prior to reaching critical crack size, (which is determined from the turbine missile analysis) and thereby potentially compromising the integrity of the turbine rotor and ultimately resulting in turbine missile generation. The staff also notes that ultrasonic inspection of turbine rotors is a standard inservice inspection and is referenced in other FSAR applications and in the guidelines of SRP Sections 3.5.1.3 and 10.2.3. Therefore, the staff requests that ultrasonic inspection of the turbine rotors be included in the inservice inspection program described in FSAR Tier 2, Section 10.2.3.6.

Response to Question 10.02.03-22:

The turbine missile analysis states that a complete volumetric ultrasonic inspection is not necessary for the welded rotor. The recommended inspection includes a thorough visual inspection for erosion and corrosion, and magnetic particle examination at selected areas to detect any cracking at the rotor surface. Ultrasonic inspections are only performed if surface indications are detected. This position is justified by the turbine manufacturer's calculation of low pressure (LP) rotor mechanical integrity (refer to the Response to RAI 100, Supplement 1, Question 10.02.03-5), and thorough inspections performed during the manufacturing process (see the Response to Question 10.02.03-20).

The rotors are 100 percent ultrasonic examined during manufacturing, which prevents unacceptable defects at origin. The analysis of acceptable defects propagation in the turbine missile analysis shows that even if the defects propagate under cyclic loading, they will not lead to rotor failure.

In the case of a stress corrosion cracking (SCC) phenomenon, the crack will appear on the areas in contact with the steam (i.e., on the external surface of the rotors). A surface examination is appropriate to detect this crack. Regarding the pin-root attachments, the surface examination will detect a crack on the external face of the external disc fingers, but not on the internal faces of the internal and external disc fingers.

The turbine missile analysis assumes (see the Response to Question 10.02.03-20.c) that at t = 0 (beginning of the period between two inspections) and that the initial crack is considered to go through the disc. The missile analysis demonstrates that with an initial crack, the time to reach the critical size is longer than the time between two consecutive inservice inspections. The initial crack can be detected by a surface examination during the inservice inspection, prior to failure of the rotor.

U.S. EPR FSAR Tier 2, Section 10.2.3.6 will be revised to reflect the information in this response.

DRAFT

FSAR Impact:

U.S. EPR FSAR Tier 2, Section 10.2.3.6 will be revised as described in the response and indicated on the enclosed markup.

DRAFT

Question 10.02.03-23:

POTENTIAL OPEN ITEM

In response to RAI 100, Question 10.02.03-10, the FSAR Tier 1 was revised in Revision 1 to clarify Table 2.8.1-3 by having ITAAC commitments 1.0a and 1.0b. In response to RAI 100, Question 10.02.03-11, the FSAR Tier 1 was revised in Revision 1 to clarify ITAAC commitment 1.0a to include that the acceptance criteria for the as-built turbine material property data, rotor and blade design, and preservice testing and inspection meet the requirements of the turbine missile probability analysis. However, the staff notes that ITAAC commitment 1.0a should apply to the "as-built turbine rotor," and the ITAAC should be revised accordingly.

Response to Question 10.02.03-23:

As-built will not be applied to the turbine rotor ITAAC in U.S. EPR FSAR Tier 1, Table 2.8.1-3—Turbine-Generator System ITAAC, Item 2.4 because it imposes an unnecessary time constraint on closing the ITAAC.

U.S. EPR FSAR Tier 1, Section 1.1 contains the definition of as-built:

> "As-built - the physical properties of a structure, system, or component following the completion of its installation or construction activities at its final location at the plant site. Determination of physical properties of the as-built structure, system, or component may be based on measurements, inspections, or tests that occur prior to installation, provided that subsequent fabrication, handling, installation, and testing do not alter the properties."

The Responses to RAI 148, Question 14.03.07-26, and RAI 182, Supplement 1, Question 14.03-10 (Part A) clarified the ITAAC wording for the turbine rotor analysis. The ITAAC wording from U.S. EPR FSAR Tier 1, Table 2.8.1-3, Item 2.4 is provided here:

Commitment Wording	Inspections, Tests, Analyses	Acceptance Criteria
Turbine disk integrity is provided through the combined use of selected materials with suitable toughness, analyses, design, testing, and inspections.	An analysis of turbine rotor material property data, turbine rotor and blade design, and preservice inspection and testing requirements will be conducted. This information will be available for review greater than one year before loading the fuel.	An analysis exists and concludes that the turbine disk integrity meets the requirements of the manufacturer's turbine missile probability analysis: (1) turbine material property data, rotor and blade design analyses (including loading combinations, assumptions and warm-up time) demonstrating sufficient safety margin to withstand loadings from overspeed events, and (2) the requirements for preservice testing and inspection information.

DRAFT

As described in the ITAAC, the turbine rotor information (analysis) will be available for review greater than one year before loading the fuel. The analysis can be completed after the rotor is constructed and does not need to be completed "following the completion of its installation or construction activities at its final location at the plant site" as required by the definition of as-built. Applying as-built to the turbine rotor analysis ITAAC would require that the turbine rotor analysis be completed and submitted to the NRC after the rotor is installed in its final location at the plant, which would impose an unnecessary time constraint.

FSAR Impact:

The U.S. EPR FSAR will not be changed as a result of this question.

DRAFT

U.S. EPR Final Safety Analysis Report Markups

DRAFT

Table 1.8-2—U.S. EPR Combined License Information Items
Sheet 35 of 49

Item No.	Description	Section	~~Action Required by COL Applicant~~	~~Action Required by COL Holder~~
9.5-22	A COL applicant that references the U.S. EPR design certification will describe the site-specific sources of acceptable fuel oil available for refilling the EDG fuel oil storage tanks within seven days, including the means of transporting and refilling the fuel storage tanks, following a design basis event to enable each diesel generator system to supply uninterrupted emergency power.	9.5.4.4	~~Y~~	
	Deleted.			
	Deleted.			
10.2-2	A COL applicant that references the U.S. EPR design certification will provide applicable material properties of the turbine rotor, including the method of calculating the fracture toughness properties, after the site-specific turbine has been procured.	10.2.3.1		~~Y~~
10.2-3	A COL applicant that references the U.S. EPR design certification will provide applicable turbine disk rotor specimen test data, load-displacement data from the compact tension specimens and the fracture toughness properties after the site-specific turbine has been procured.	10.2.3.2		~~Y~~
10.2-4	~~Deleted.~~ A COL applicant that references the U.S. EPR design certification will provide schematics and logic diagrams for the turbine control system.	10.2.2.5		
10.2-5	A COL applicant that references the U.S. EPR design certification will provide the site-specific turbine rotor inservice inspection program and inspection interval consistent with the manufacturer's turbine missile analysis.	10.2.3.6	~~Y~~	
10.3-1	A COL applicant that references the U.S. EPR design certification will identify the authority responsible for implementation and management of the secondary side water chemistry program.	10.3.5	~~Y~~	

10.02.03-18

10.02.03-21

DRAFT

10.2.3 Turbine Rotor Integrity

Turbine rotor integrity is provided by the integrated combination of material selection, rotor design, fracture toughness requirements, inspections and tests. The combination results in a very low probability of rotor failure.

10.2.3.1 Materials Selection

10.02.03-17

Turbine rotors are made from vacuum melted or vacuum degassed Ni-Cr-Mo alloy steel by processes that minimize flaw occurrence and provide adequate fracture toughness. Tramp elements are controlled to the lowest practical concentrations consistent with good scrap selection and melting practice, and consistent with obtaining adequate initial and long-life fracture toughness for the environment in which the parts operate. The sulfur and phosphorous concentrations are specified below 0.020 percent (chemical product analysis), which is in accordance with specifications ASTM A470 (Reference 11) and ASTM A471 (Reference 4).

The chemical compositions and mechanical properties used for the turbine rotors are given in Table 10.2-3—HP Rotor, Table 10.2-4—IP Discs and Shaft End, and Table 10.2-5—LP Rotor.

A cast chemical analysis is performed on each rotor forging element. It shall conform to the requirements of the material specification.

Tensile test pieces and procedures are in accordance with the requirements of ASTM A370.

The turbine materials have the lowest fracture appearance transition temperatures (FATT) and highest Charpy V-notch (C_v) energies obtainable, on a consistent basis, from water quenched Ni-Cr-Mo material at the sizes and strength levels used. The processing is controlled to maintain the following:

- 50 percent FATT less than 0°F for the LP turbine rotors.
- Charpy V-notch energy at the minimum operating temperature of each LP rotor in the tangential direction greater than or equal to 60 ft-lbs.

The form, dimensions and procedure used for Charpy V-notch impact tests are in accordance with the requirements of ASTM A370. The average value for the Charpy V-notch impact strength obtained on the three test pieces shall not be lower than specified for the material. Not more than one individual value shall be below the specified value and no individual value shall be lower than 70 percent of the specified value.

Curves of Charpy V-notch absorbed energy and percentage crystallinity versus test temperature are plotted for FATT determination. The method of measurement of

DRAFT

crystallinity conforms to the requirements of ASTM A370. The FATT is determined as the temperature corresponding to 50 percent crystallinity using a minimum of ten test pieces.

10.02.03-18

Table 10.2-2—Turbine-Generator Material Data, provides a list of material specifications for turbine-generator components. Actual material properties of turbine rotors are obtained through precise destructive tests of actual samples from each turbine rotor. A COL applicant that references the U.S. EPR design certification will provide applicable material properties of the turbine rotor, including the method of calculating the fracture toughness properties, after the site-specific turbine has been procured.

10.2.3.2 Fracture Toughness

As noted in Section 10.2.3.1, a suitable material toughness is obtained through the use of selected materials to produce a balance of adequate material strength and toughness and maintain a reasonable level of safety, while simultaneously providing high reliability, availability and efficiency during operation.

Stress calculations are performed taking into account centrifugal loads and thermal gradients, wherever applicable, on all major components (e.g., rotors, casings, blades). Fracture mechanics calculations are performed on the rotors taking into account the maximum acceptable size defect for U.S. standards. Calculations verify that the initial defect, after increasing due to fatigue during the equipment lifetime, does not propagate and remains non critical by a large margin as regards to brittle fracture.

The ratio of the fracture toughness, K_{Ic} (as calculated from the material tests performed on the rotor) to the maximum tangential stress at speeds from normal to 120 percent of the rated speed, is at least 2 √in, at minimum operating temperature. Adequate fracture toughness to prevent brittle fracture during startup is verified by calculating startup curves specifying appropriate startup temperature and sufficient warm-up time.

The acceptance criteria for UT inspections are:

- 3 mm maximum for discs (depending on the areas).
- 5 mm maximum for shaft ends (depending on the areas).

Fracture toughness properties are calculated from material tests and can be obtained by any of the following methods:

- Testing of the actual material of the turbine rotor to establish the Klc value at normal operating temperature.

DRAFT

- The turbine shaft bearings are able to withstand any combination of the normal operating loads, anticipated transients and accidents resulting in a turbine trip.
- The natural critical frequencies of the turbine shaft assemblies between zero speed and 20 percent overspeed are controlled by design and during operation stages to minimize adverse effects to the unit during operation.
- The turbine rotor design facilitates inservice inspection of high stress regions.
- Stress corrosion cracking is considered as a degradation mechanism for crack growth.

10.2.3.5 Turbine Rotor Preservice Inspections and Testing

The following preservice inspections are performed during manufacture:

- Forged or welded rotors are rough machined prior to heat treatment.
- Each finished forged or welded rotor is subjected to 100 percent volumetric (ultrasonic), surface and visual examinations using procedures and acceptance criteria equivalent to those specified for Class 1 components in the ASME BPV Code, Section III (Reference 7) and Section V (Reference 8). Before welding or brazing, all surfaces prepared for welding or brazing are surface examined. After welding or brazing, all surfaces exposed to steam are surface examined, giving particular attention to stress risers and welds. Welds are ultrasonically examined (100 percent volumetric examination), equivalent to examinations in Reference 8. Each weld in the turbine rotor assembly is subjected to 100 percent examination in the radial, longitudinal, and tangential directions. Acceptance criteria shall be the most stringent between manufacturer's standards and ASME Code Section III, subsection NB-5300 (Reference 10).
- Each turbine rotor assembly is spin tested at 120 percent of normal operating speed.

10.2.3.6 Turbine Rotor Inservice Inspection Program Plan

A turbine rotor inservice inspection program detects rotor or disk flaws that can lead to brittle failure at or below design speed in the steam turbine rotor assembly. The turbine rotor inservice inspection program uses visual, surface and volumetric examinations to inspect components in the steam turbine rotor assembly. The inspections are performed during refueling outages on an interval consistent with the inservice inspection schedules in Reference 3 and the inspection intervals from the turbine manufacturer's turbine missile analysis provided by the COL applicant as described in Section 3.5.1.3. A COL applicant that references the U.S. EPR design certification will provide the site-specific turbine rotor inservice inspection program and inspection interval consistent with the manufacturer's turbine missile analysis.

10.02.03-21

Inservice inspection activities associated with the steam turbine rotor assembly include:

DRAFT

HP/IP Cylinder–Rotors (Including Couplings)

- Visual inspections (surface condition, traces of friction, shaft journals bearings, coupling flange and thrust bearing collar) equivalent to examination defined in Reference 3.
- Examination of the fillet radii between discs and shaft.
- Magnetic particle examination in the area of blade attachments.
- Check of balancing weights.
- Visual examination of the coupling bolt holes.

10.02.03-22

LP Cylinders–Rotors (Including Couplings)

- Visual inspections (traces of erosion, disc fillets, journals, gland seals and coupling flanges) equivalent to examination defined in Reference 3.
- Visual examination of the coupling bolt holes.
- Inspection of balancing weights.
- Visual inspection and ~~M~~magnetic particle examination in the area of blade attachments. If surface indications are detected, ultrasonic inspections will be performed.
- ~~Non-destructive examination (NDE) of rotor fir-tree roots (last stage).~~

10.2.4 Safety Evaluation

The TG is not safety-related and does not perform any safety-related functions.

The TG design satisfies general design criteria (GDC 4) relating to the protection of structures, systems and components (SSC) important to safety from turbine missiles. A failure in the TG package does not affect any structures, systems and components (SSC) important to safety and does not preclude safe shutdown of the reactor.

- The orientation of the U.S. EPR TG is favorably oriented because the containment and most of the safety-related SSC are located outside the low-trajectory hazard zone. Turbine missiles are addressed in Section 3.5.1.3.
- The TG design includes a redundant overspeed protection system, which terminates an overspeed event prior to reaching design overspeed.
- The TG package and associated piping, valves and controls are located completely within the Turbine Building. There are no safety-related systems or components located in the Turbine Building.

DRAFT

9. ASTM A370-05, "Standard Test Methods and Definition for Mechanical Testing of Steel Products," American Society for Testing and Materials, 2005.

10.02.03-17

10. ASME Boiler and Pressure Vessel Code, Section III: "Rules for Construction of Nuclear Facility Components," Subsection NB-5300 Acceptance Standards, The American Society of Mechanical Engineers, 2004.

11. ASTM A470-05, "Standard Specification for Vacuum-Treated Carbon and Alloy Steel Forgings for Turbine Rotors and Shafts," American Society for Testing and Materials, 2005.

DRAFT

Table 10.2-2—Turbine-Generator Material Data

Component	Nearest ASTM Designation
Stop Valve Bodies	A356:Gr2
Stop Valve Disc	X19CrMoVNbN11-1 No ASTM Equivalent
Stop Valve Seats	A336:F22, Class 3
Control Valve Bodies	A356:Gr2
Control Valve Disc	X19CrMoVNbN11-1 No ASTM Equivalent
Control Valve Seats	A336:F22, Class 3
Combined Reheat Valve Body	Carbon Steel
Combined Reheat Valve Disc	Carbon Steel
High Temp Valve Stems	X19CrMoVNbN11-1 No ASTM Equivalent
Lead Steam Piping	EN10028:P295GH No ASTM Equivalent
Hot Reheat Piping	Carbon Steel
Cold Reheat Piping	Stainless Steel
HIP Rotor	22NiCrMoV12-7 No ASTM Equivalent~~A471, Class 2~~
HP Diaphragm/Blade Carriers	A182:F6b / A216Gr.WCC
HP Blades	A565:Gr.616
HP Shell	GX6CrNiMo12-1 No ASTM Equivalent
LP Rotor	23CrNiMo 7-4 No ASTM Equivalent
LP Diaphragm/Blade Carriers	A240type405 / A516Gr.70
LP Blades	A565Gr.616/Last 2 Blades A565:XM32
LP Casings	A516Gr.70
LP Outer Casing	A516Gr.60

10.02.03-17

DRAFT

Table 10.2-3—HP Rotor

Chemical Composition of Cast – Weight %			
Element	**Symbol**	**Minimum**	**Maximum**
Carbon	C	0.20	0.25
Silicon	Si	0.10	0.40
Manganese	Mn	0.40	0.80
Phosphorous	P	-	0.012
Sulfur	S	-	0.012
Nickel	Ni	2.80	3.20
Chromium	Cr	1.50	2.00
Molybdenum	Mo	0.40	0.60
Vanadium	V	-	0.11
Copper	Cu	-	0.12
Phosphorous + Tin	P + Sn	-	0.018
Arsenic	As	-	0.018
Antimony	Sb	-	0.003
Aluminum	Al	-	0.015

Mechanical Property Requirements at 23°C ± 5°C at Rim and Subsurface Test Locations				
Heat Treatment Stage		**After Post-Weld Heat Treatment**		
Property	**Unit**	**Orientation**	**Minimum**	**Maximum**
Tensile Strength	N/mm^2	Long. / Transv	660	-
0.2% Proof Strength	N/mm^2	Long. / Transv	550	650
Elongation on 5.65 $\sqrt{So}$	%	Long. / Transv	15 / 14	-
Reduction of Area	%	Long. / Transv	50	-

Notch Impact Property Requirements at Rim and Subsurface Test Locations				
Heat Treatment Stage		**Delivery Condition and After Post-Weld Heat Treatment**		
Property	**Unit**	**Orientation**	**Minimum**	**Maximum**
Notch Impact Strength at Minimum Operating Temperature	J	Transv.	81	-
FATT (50%)	°C	Long / Transv	-	-30

10.02.03-17

DRAFT

Table 10.2-4—IP Discs and Shaft End

Chemical Composition of Cast – Weight %			
Element	**Sym-bol**	**Minimum**	**Maximum**
Carbon	C	0.20	0.25
Silicon	Si	0.10	0.40
Manganese	Mn	0.40	0.80
Phosphorous	P	-	0.012
Sulfur	S	-	0.012
Nickel	Ni	2.80	3.20
Chromium	Cr	1.50	2.00
Molybdenum	Mo	0.40	0.60
Vanadium	V	-	0.11
Copper	Cu	-	0.12
Phosphorous + Tin	P + Sn	-	0.018
Arsenic	As	-	0.018
Antimony	Sb	-	0.003
Aluminum	Al	-	0.015

Mechanical Property Requirements at 23°C ± 5°C at rim and subsurface test locations				
Heat Treatment Stage		**After Post-Weld Heat Treatment**		
Property	**Unit**	**Orientation**	**Minimum**	**Maximum**
Tensile Strength	N/mm^2	Long. / Transv	740	880
0.2% Proof Strength	N/mm^2	Long. / Transv	635	-
Elongation on 5.65 √So	%	Long. / Transv	15 / 14	-
Reduction of Area	%	Long. / Transv	50	-

Notch Impact Property Requirements at rim and subsurface test locations				
Heat Treatment Stage		**Delivery Condition and After Post-Weld Heat Treatment**		
Property	**Unit**	**Orientation**	**Minimum**	**Maximum**
Notch Impact Strength at Minimum Operating Temperature	J	Transv.	81	-
FATT (50%)	°C	Long / Transv	-	-30

10.02.03-17

DRAFT

Table 10.2-5—LP Rotors

Material designation	23CrNiMo7-4		
Material type	Low alloy steel		
Applicable product form(s)	Forgings		
Chemical Composition of Cast – Weight %			
Element	Symbol	Minimum	Maximum
Carbon	C	0.20	0.26
Silicon	Si	-	0.30
Manganese	Mn	0.50	0.80
Phosphorous	P	-	0.010
Sulfur	S	-	0.015
Nickel	Ni	0.90	1.20
Chromium	Cr	1.70	2.00
Molybdenum	Mo	0.60	0.80
Vanadium	V	-	0.050
Phosphorous + Tin	P + Sn	-	0.020

Mechanical Property Requirements at 23°C ± 5°C at rim and subsurface test locations				
Heat Treatment Stage		Delivery Condition and After Post-Weld Heat Treatment		
Property	Unit	Orientation	Minimum	Maximum
Tensile Strength	N/mm^2	Long. / Transv	740	880
0.2% Proof Strength	N/mm^2	Long. / Transv	635	-
Elongation on 5.65 √So	%	Long. / Transv	17 / 15	-
Reduction of Area	%	Long. / Transv	50	-

Notch Impact Property Requirements				
Heat Treatment Stage		Delivery Condition and After Post-Weld Heat Treatment		
Property	Unit	Orientation	Minimum	Maximum
Notch Impact Strength at Minimum Operating Temperature	J	Transv.	81	-
FATT (50%)	°C	Long / Transv	-	-18

DRAFT

10.02.03-17