G287SH.1

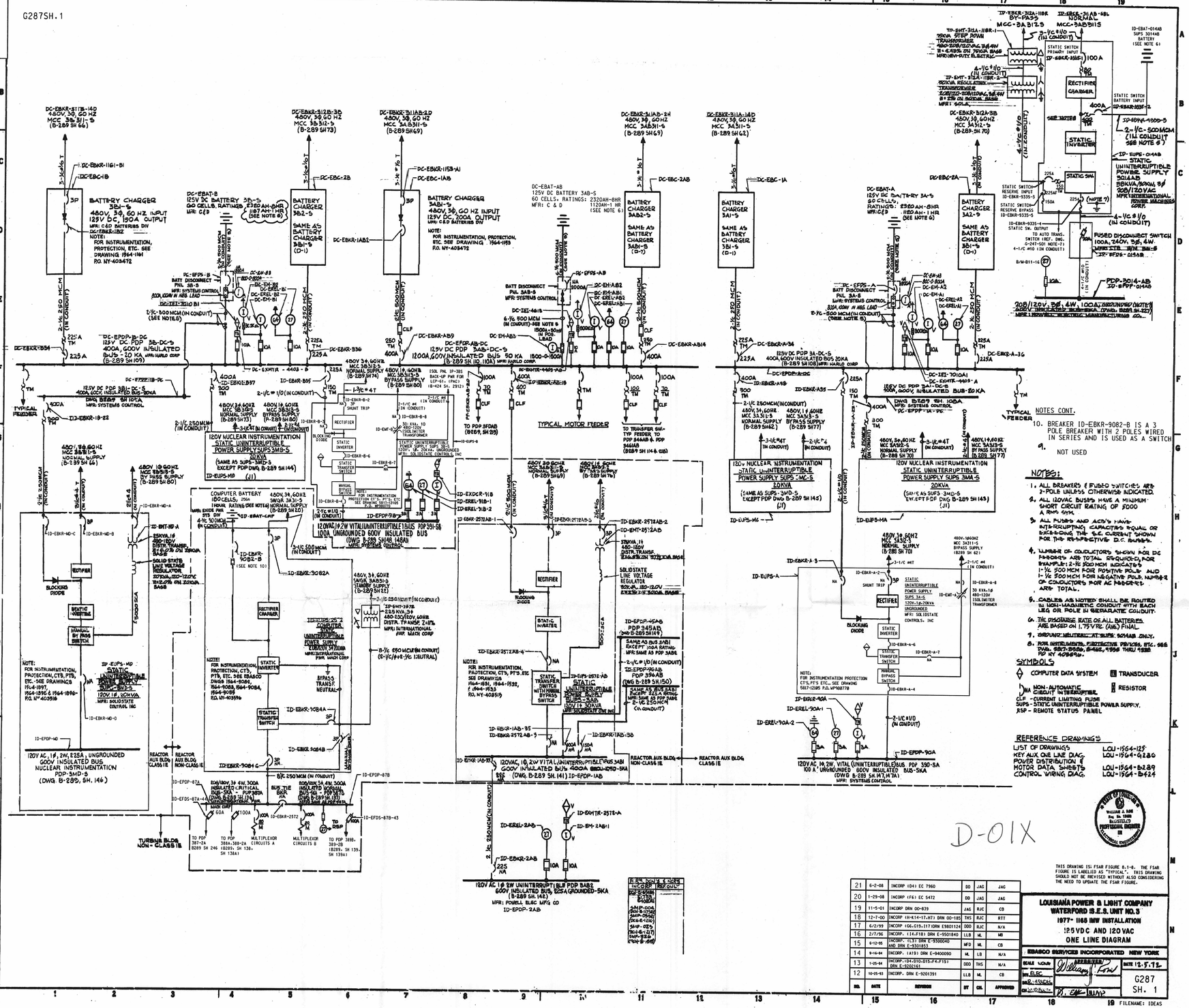

NOTES CONT.

10. BREAKER ID-EBKR-9082-B IS A 3 POLE BREAKER WITH 2 POLES WIRED IN SERIES AND IS USED AS A SWITCH

9. NOT USED

NOTES:

1. ALL BREAKERS & FUSED SWITCHES ARE 2-POLE UNLESS OTHERWISE INDICATED.
2. 120VAC BUSES HAVE A MINIMUM SHORT CIRCUIT RATING OF 2000 A RMS SYM.
3. ALL FUSES AND ACB'S HAVE INTERRUPTING CAPACITIES EQUAL OR EXCEEDING THE S.C. CURRENT SHOWN FOR THE RESPECTIVE D.C. BUSES.
4. NUMBER OF CONDUCTORS SHOWN FOR DC FEEDERS ARE TOTAL REQUIRED, FOR EXAMPLE: 2-1/C 500 MCM INDICATES 1-1/C 500 MCM FOR POSITIVE POLE AND 1-1/C 500 MCM FOR NEGATIVE POLE. NUMBER OF CONDUCTORS FOR AC FEEDERS ARE TOTAL.
5. CABLES AS NOTED SHALL BE ROUTED IN NON-MAGNETIC CONDUIT WITH EACH LEG OR POLE IN SEPARATE CONDUIT.
6. THE DISCHARGE RATE OF ALL BATTERIES ARE BASED ON 1.75 VPC (MIN.) FINAL.
7. GROUND NEUTRAL AT SUPS 3CMAB ONLY.
8. FOR INSTRUMENTS, PROTECTIVE DEVICES, ETC. SEE DWG. 5857-2589, 5857-2588, 1964 THRU 1968 RO NY 403896.

SYMBOLS

- COMPUTER DATA SYSTEM
- NON-AUTOMATIC CIRCUIT INTERRUPTER
- CLF - CURRENT LIMITING FUSE
- SUPS - STATIC UNINTERRUPTIBLE POWER SUPPLY.
- RSP - REMOTE STATUS PANEL
- TRANSDUCER
- RESISTOR

REFERENCE DRAWINGS

LIST OF DRAWINGS	LOU-1964-125
KEY AUX ONE LINE DIAG.	LOU-1964-G286
POWER DISTRIBUTION & MOTOR DATA SHEETS	LOU-1964-B289
CONTROL WIRING DIAG.	LOU-1964-B424

D-01X

THIS DRAWING IS: FSAR FIGURE 8.1-8. THE FSAR FIGURE IS LABELLED AS "TYPICAL". THIS DRAWING SHOULD NOT BE REVISED WITHOUT ALSO CONSIDERING THE NEED TO UPDATE THE FSAR FIGURE.

NO.	DATE	REVISION	BY	CHK	APPROVED
21	6-2-08	INCORP (D4) EC 7960	DD	JAG	JAG
20	1-29-08	INCORP (F6) EC 5472	DD	JAG	JAG
19	11-5-01	INCORP DRN 00-839	JAG	RJC	CB
18	12-1-00	INCORP (D-14-17,H1) DRN 00-185	THS	RJC	RTT
17	6-2-99	INCORP (G6-D15-117) DRN E9001124	DDD	RJC	N/A
16	2/7/96	INCORP. (I4,F18) DRN E-9501840	LLB	ML	MR
15	6-12-95	INCORP. (L3) DRN E-9500040 AND DRN E-9501853	MFD	ML	CB
14	9-16-94	INCORP. (A19) DRN E-9400090	ML	LB	N/A
13	1-25-94	INCORP. (D4, D10, D15, F4, F15) DRN E-9202161	DDD	THS	N/A
12	10-25-93	INCORP. DRN E-9201391	LLB	ML	CB

LOUISIANA POWER & LIGHT COMPANY
WATERFORD S.E.S. UNIT NO. 3
1977- 1165 MW INSTALLATION
125VDC AND 120VAC
ONE LINE DIAGRAM

EBASCO SERVICES INCORPORATED NEW YORK

SCALE NONE | APPROVED | DATE 12.5.72
DWN. ELEC | DWG. 4906E
CHK. | DR. EMC

G287
SH. 1

FILENAME: IDEAS