US-APWR DCD Revision 2
RAI Tracking Report

June 2010

Ⓒ2010 Mitsubishi Heavy Industries, Ltd.
All Rights Reserved

Revision History

Revision	Page	Description
0	All	Original issued Including RAI responses that were submitted through October 31, 2009
1	All	Including RAI responses that were submitted through December 31, 2009
2	All	Including RAI responses that were submitted through February 28, 2010 Including editorial changes to clarify the English language and to correct typographical errors
3	All	Including RAI responses that were submitted through April 30, 2010 Including editorial changes to clarify the English language and to correct typographical errors

© 2010
MITSUBISHI HEAVY INDUSTRIES, LTD.
All Rights Reserved

This document has been prepared by Mitsubishi Heavy Industries, Ltd. ("MHI") in connection with the U.S. Nuclear Regulatory Commission's ("NRC") licensing review of MHI's US-APWR nuclear power plant design. No right to disclose, use or copy any of the information in this document, other than by the NRC and its contractors in support of the licensing review of the US-APWR, is authorized without the express written permission of MHI.

This document contains technology information and intellectual property relating to the US-APWR and it is delivered to the NRC on the express condition that it not be disclosed, copied or reproduced in whole or in part, or used for the benefit of anyone other than MHI without the express written permission of MHI, except as set forth in the previous paragraph.
This document is protected by the laws of Japan, U.S. copyright law, international treaties and conventions, and the applicable laws of any country where it is being used.

Mitsubishi Heavy Industries, Ltd.
16-5, Konan 2-chome, Minato-ku
Tokyo 108-8215 Japan

General Description

This report includes a table that identifies the impact of each response to the Request for Additional Information ("RAI") relative to the Design Control Document ("DCD") Revision 2 of US-APWR. This table shows the RAI responses which have been submitted since October 2009 and also should be incorporated into Tracking Report and DCD in future revision.

The report also includes the DCD Markups and Revision List for the RAI responses that impacted the DCD. Furthermore, the editorial changes to clarify the English language and to correct typographical errors are shown in the DCD Markups and Revision List.

Contents

For ease of using this Tracking Report, each chapter is organized in a stand alone fashion that includes a cover sheet and the following relevant information:

- DCD Revision List – a list of the revision resulting from RAI responses and others changes
- DCD Markups – a copy of the DCD pages that have changes resulting from RAI responses or others change.

Chapter:2

SRP Section		DCD RAI Response							Other Drivers	Change ID Number for DCD forthcoming Revision	DCD Tracking Report Revision	DCD Revision
No.	Title	RAI No.	Question No.	Response Date	Impact on DCD	Impact on COLA	Impact on PRA	Response Status				
2.0	Site Charactoristics and Site Parameters	518	02-1	2010/2/15	Y	Y	N		-	DCD_02-1	2	3
2.2.3	Evaluation of Potential Accidents											
2.3.1	Regional Climatology											
2.3.2	Local Meteorology	547	02.03.01-17	2010/4/14	Y	Y	N			DCD_02.03.01-17	3	3
		547	02.03.01-18	2010/4/14	Y	N	N			DCD_02.03.01-18	3	3
		547	02.03.01-19	2010/4/14	Y	N	N			DCD_02.03.01-19	3	3
2.3.3	Onsite Meteorological Measurement Programs											
2.3.4	Short-term Dispersion Estimates for Accident Releases	562	02.03.04-6	2010/4/28	Y	N	N		-	DCD_02.03.04-6	3	3
		562	02.03.04-7	2010/4/28	Y	N	N		-	DCD_02.03.04-7	3	3
		562	02.03.04-8	2010/4/28	Y	N	N		-	DCD_02.03.04-8	3	3
		562	02.03.04-9	2010/4/28	Y	Y	N		-	DCD_02.03.04-9	3	3
2.3.5	Long-Term Atmospheric Dispersion Estimates for Routine Releases											
2.4	Hydrology											
2.4.1	Hydrologic Description											
2.4.2	Floods											
2.4.3	Probable Maximum Flood (PMF) on Streams and Rivers											
2.4.4	Potential Dam Failures											
2.4.5	Probable Maximum Surge and Seiche Flooding											
2.4.6	Probable Maximum Tsunami Hazards											
2.4.7	Ice Effects											

Chapter:2

SRP Section		DCD RAI Response							Other Drivers	Change ID Number for DCD forthcoming Revision	DCD Tracking Report Revision	DCD Revision
No.	Title	RAI No.	Question No.	Response Date	Impact on DCD	Impact on COLA	Impact on PRA	Response Status				
2.4.8	Cooling Water Canals and Reservoirs											
2.4.9	Channel Diversions											
2.4.10	Flooding Protection Requirements											
2.4.11	Low Water Considerations											
2.4.12	Groundwater											
2.4.13	Accidental Releases of Radioactive Liquid Effluents in Ground and Surface Waters											
2.4.14	Technical Specifications and Emergency Operation Requirements											
2.5.1	Technical Specifications and Emergency Operation Requirements											
2.5.2	Vibratory Ground Motion											
2.5.3	Surface Faulting											
2.5.4	Stability of Subsurface Materials and Foundations	OI	02.05.04-01A	2010/2/22	Y	N	N		-	DCD_02.05.04-01A	2	3
2.5.5	Stability fo Slopes											

Chapter:3

SRP Section		DCD RAI Response							Other Drivers	Change ID Number for DCD forthcoming Revision	DCD Tracking Report Revision	DCD Revision
No.	Title	RAI No.	Question No.	Response Date	Impact on DCD	Impact on COLA	Impact on PRA	Response Status				
3.2.1	Seismic Classification											
3.2.2	System Quality Group Classification								CP RAI 67	CP_03.02.02-3	0	3
3.3.1	Wind Loadings											
3.3.2	Tornado Loadings											
3.4.1	Internal Flood Protection for Onsite Equipment Failures											
3.4.2	Analysis Procedures		03.04.02-1									
			03.04.02-2									
			03.04.02-3									
			03.04.02-4									
		489	03.04.02-5	12/26/2009	N	N	N		-	-	N/A	N/A
		546	03.04.02-6	2010/4/16	N	N	N		-	-	N/A	N/A
3.5.1.1	Internally Generated Missiles (Outside Containment)											
3.5.1.2	Internally-Generated Missiles (Inside Containment)											
3.5.1.3	Turbine Missiles	323	03.05.01.03-3	2010/5/24	Y	N	N		-	DCD_03.05.01.03-3	TBD	
3.5.1.4	Missiles Generated by Tornadoes and Extreme Winds											
3.5.1.5	Site Proximity Missiles (Except Aircraft)											
3.5.1.6	Aircraft Hazards											
	Structures, Systems, and Components to be Protected from Externally-Generated Missiles											
3.5.3	Barrier Design Procedures	482	03.05.03-7	2009/12/9	N	N	N		-	-	N/A	N/A
		482	03.05.03-8	2009/12/9	Y	N	N		-	DCD_03.05.03-8	1	3
3.6.1	Plant Design for Protection Against Postulated Piping Failures											

Chapter:3

SRP Section		DCD RAI Response							Other Drivers	Change ID Number for DCD forthcoming Revision	DCD Tracking Report Revision	DCD Revision
No.	Title	RAI No.	Question No.	Response Date	Impact on DCD	Impact on COLA	Impact on PRA	Response Status				
	in Fluid Systems											
	Outside Containment											
3.6.2	Determination of Rupture Locations	459	03.06.02-20	2009/10/16	Y	N	N		-	DCD_03.06.02-20	-	2
	and Dynamic Effects Associated	459	03.06.02-21	2009/10/16	N	N	N		-	-	N\A	N\A
	with the Postulated Rupture	459	03.06.02-22	2009/10/16	Y	N	N		-	DCD_03.06.02-22	-	2
	of Piping	459	03.06.02-23	2009/10/16	Y	N	N		-	DCD_03.06.02-23	-	2
		459	03.06.02-24	2009/10/16	Y	N	N		-	DCD_03.06.02-24	-	2
		459	03.06.02-25	2009/10/16	Y	N	N		-	DCD_03.06.02-25	0	3
		459	03.06.02-26	2009/10/16	N	N	N		-	-	N\A	N\A
		459	03.06.02-27	2009/10/16	Y	N	N		-	DCD_03.06.02-27	-	2
		459	03.06.02-28	2009/12/1	N	N	N		-	-	N\A	N\A
		459	03.06.02-29	2009/12/1	N	N	N		-	-	N\A	N\A
		459	03.06.02-30	2009/12/1	N	N	N		-	-	N\A	N\A
		459	03.06.02-31	2009/12/1	N	N	N		-	-	N\A	N\A
		459	03.06.02-32	2009/12/1	N	N	N		-	-	N\A	N\A
		459	03.06.02-33	2009/12/1	N	N	N		-	-	N\A	N\A
		459	03.06.02-34	2009/12/1	N	N	N		-	-	N\A	N\A
		459	03.06.02-35	2009/12/1	N	N	N		-	-	N\A	N\A
		459	03.06.02-36	2009/10/16	N	N	N		-	-	N\A	N\A
		459	03.06.02-37	10/16/2009	Y	N	N		-	DCD_03.06.02-37	-	2
		459	03.06.02-38	10/16/2009	Y	N	N		-	DCD_03.06.02-38	-	2
		459	03.06.02-39	2009/12/1	Y	N	N		-	DCD_03.06.02-39	1	3
3.6.3	Leak-Before-Break	485	3.6.3-18	2010/1/18	N	N	N		-	-	N/A	N/A
	Evaluation Procedures	485	3.6.3-19	2010/1/18	Y	Y	N		-	DCD_3.6.3-19	2	3
		485	3.6.3-20	2010/1/18	N	N	N		-	-	N/A	N/A
		485	3.6.3-21	2010/1/18	Y	N	N		-	DCD_3.6.3-21	2	3
		485	3.6.3-22	2010/1/18	N	N	N		-	-	N/A	N/A
		485	3.6.3-23	2010/1/18	N	N	N		-	-	N/A	N/A
		485	3.6.3-24	2010/1/18	Y	N	N		-	DCD_3.6.3-24	2	3
		485	3.6.3-25	2010/1/18	N	N	N		-	-	N/A	N/A
3.7.1	Seismic Design Parameters	494	03.07.01-2	2010/1/29	N	N	N		-	-	N/A	N/A
		494	03.07.01-3	2010/1/29	N	N	N		-	-	N/A	N/A
		494	03.07.01-4	2010/1/29	Y	Y	N		-	DCD_03.07.01-4	2	3
3.7.2	Seismic System Analysis	495	03.07.02-2	2010/2/2	N	N	N		-	-	N/A	N/A
		212	3.7.2-3	2009/5/7	Y	N	N		-	DCD_3.7.2-3	TBD	
		495	03.07.02-3A	2010/2/2	N	N	N		-	-	N/A	N/A
		495	03.07.02-4	2010/2/2	Y	N	N		-	DCD_03.07.02-4	TBD	
		495	03.07.02-5	2010/2/2	Y	N	N		-	DCD_03.07.02-5	2	3
		212	3.7.2-17	2009/5/7	Y	N	N		-	DCD_3.7.2-17	TBD	
		212	3.7.2-18	2009/5/7	Y	N	N		-	DCD_3.7.2-18	TBD	
		212	3.7.2-19	2009/5/7	Y	N	N		-	DCD_3.7.2-19	TBD	
			3.7.2-29									
			3.7.2-30									
			3.7.2-31									
			3.7.2-32									
		542	3.7.2-33	2010/3/30	N	N	N		-	-	N/A	N/A
		542	3.7.2-17	2010/3/30	N	N	N		-	-	N/A	N/A
		542	3.7.2-17	2010/3/30	N	N	N		-	-	N/A	N/A
3.7.3	Seismic Subsystem Analysis	493	03.07.03-2	2010/1/28	Y	N	N		-	DCD_03.07.03-2	2	3
		493	03.07.03-3	2010/1/28	N	N	N		-	-	N/A	N/A
		493	03.07.03-4	2010/1/28	N	N	N		-	-	N/A	N/A
		493	03.07.03-5	2010/1/28	Y	N	N		-	DCD_03.07.03-5	2	3
3.7.4	Seismic Instrumentation											
		538	03.07.04-03	2010/3/30	Y	N	N		-	DCD_03.07.04-03	3	3

Chapter:3

SRP Section		DCD RAI Response							Other Drivers	Change ID Number for DCD forthcoming Revision	DCD Tracking Report Revision	DCD Revision
No.	Title	RAI No.	Question No.	Response Date	Impact on DCD	Impact on COLA	Impact on PRA	Response Status				
3.8.1	Concrete Containment											
		-	-	-	-	-	-	-	COL3.8(2) deleted	MAP-03-004	0	2, 3
		490	03.08.01-2	2010/2/4	N	N	N		-	-	N/A	N/A
		490	03.08.01-3	2010/2/4	N	N	N		-	-	N/A	N/A
		490	03.08.01-4	2010/2/4	N	N	N		-	-	N/A	N/A
		490	03.08.01-5	2010/2/4	N	N	N		-	-	N/A	N/A
		490	03.08.01-6	2010/2/4	N	N	N		-	-	N/A	N/A
		490	03.08.01-7	2010/2/4	N	N	N		-	-	N/A	N/A
		490	03.08.01-8	2010/2/4	N	N	N		-	-	N/A	N/A
		490	03.08.01-9	2010/2/4	N	N	N		-	-	N/A	N/A
		490	03.08.01-10	2010/2/4	N	N	N		-	-	N/A	N/A
3.8.3	Concrete and Steel	491	03.08.03-16	2010/3/3	N	N	N		-	-	N/A	N/A
	Internal Structures	491	03.08.03-17	2010/3/3	N	N	N		-	-	N/A	N/A
	of Steel or Concrete Containments	491	03.08.03-18	2010/3/3	N	N	N		-	-	N/A	N/A
		491	03.08.03-19	2010/3/3	N	N	N		-	-	N/A	N/A
		491	03.08.03-20	2010/3/3	N	N	N		-	-	N/A	N/A
		491	03.08.03-21	2010/3/3	N	N	N		-	-	N/A	N/A
		491	03.08.03-22	2010/3/3	N	N	N		-	-	N/A	N/A
		491	03.08.03-23	2010/3/3	N	N	N		-	-	N/A	N/A
		491	03.08.03-24	2010/3/3	N	N	N		-	-	N/A	N/A
		491	03.08.03-25	2010/3/3	N	N	N		-	-	N/A	N/A
3.8.4	Other Seismic Category I Structures	497	03.08.04-32	2010/2/19	N	N	N		-	-	N/A	N/A
		497	03.08.04-33	2010/2/19	Y	N	N		-	DCD_03.08.04-33	TBD	
		497	03.08.04-34	2010/2/19	Y	N	N		-	DCD_03.08.04-34	2	3
		497	03.08.04-35	2010/2/19	N	N	N		-	-	N/A	N/A
		497	03.08.04-36	2010/2/19	Y	N	N		-	DCD_03.08.04-36	2	3
		497	03.08.04-37	2010/2/19	N	N	N		-	-	N/A	N/A
		497	03.08.04-38	2010/2/19	N	N	N		-	-	N/A	N/A
		497	03.08.04-39	2010/2/19	N	N	N		-	-	N/A	N/A
		497	03.08.04-40	2010/2/19	N	N	N		-	-	N/A	N/A
		497	03.08.04-41	2010/2/19	Y	N	N		-	DCD_03.08.04-41	2	3
		497	03.08.04-42	2010/2/19	N	N	N		-	-	N/A	N/A
		497	03.08.04-43	2010/2/19	N	N	N		-	-	N/A	N/A
		497	03.08.04-44	2010/2/19	N	N	N		-	-	N/A	N/A
		497	03.08.04-45	2010/2/19	N	N	N		-	-	N/A	N/A
		497	03.08.04-46	2010/2/19	Y	N	N		-	DCD_03.08.04-46	2	3
		497	03.08.04-47	2010/2/19	N	N	N		-	-	N/A	N/A
3.8.5	Foundations	496	03.08.05-23	2010/2/4	N	N	N		-	-	N/A	N/A
		496	03.08.05-24	2010/2/4	N	N	N		-	-	N/A	N/A
		496	03.08.05-25	2010/2/4	Y	N	N		-	DCD_03.08.05-25	2	3
		496	03.08.05-26	2010/2/4	N	N	N		-	-	N/A	N/A
		496	03.08.05-27	2010/2/4	N	N	N		-	-	N/A	N/A
		496	03.08.05-28	2010/2/4	N	N	N		-	-	N/A	N/A
		496	03.08.05-29	2010/2/4	N	N	N		-	-	N/A	N/A
		496	03.08.05-30	2010/2/4	N	N	N		-	-	N/A	N/A
		496	03.08.05-31	2010/2/4	N	N	N		-	-	N/A	N/A
		496	03.08.05-32	2010/2/4	Y	N	N		-	DCD_03.08.05-32	2	3
		496	03.08.05-33	2010/2/4	N	N	N		-	-	N/A	N/A
		496	03.08.05-34	2010/2/4	N	N	N		-	-	N/A	N/A
		496	03.08.05-35	2010/2/4	Y	Y	N		-	DCD_03.08.05-35	2	3
3.9.1	Special Topics for											
	Mechanical Components											
3.9.2	Dynamic Testing and Analysis	498	03.09.02-59	2010/1/15	N	N	N		-	-	N/A	N/A
	of Systems, Structures,	498	03.09.02-60	2010/1/15	N	N	N		-	-	N/A	N/A
	and Components	498	03.09.02-61	2010/2/3	Y	N	N		-	DCD_03.09.02-61	TBD	
		498	03.09.02-62	2010/2/3	Y	N	N		-	DCD_03.09.02-62	TBD	
		498	03.09.02-63	2010/1/15	N	N	N		-	-	N/A	N/A
		498	03.09.02-64	2010/2/3	Y	N	N		-	DCD_03.09.02-64	2	3
		498	03.09.02-65	2010/2/3	N	N	N		-	-	N/A	N/A
		498	03.09.02-66	2010/2/3	N	N	N		-	-	N/A	N/A
		498	03.09.02-67	2010/1/15	N	N	N		-	-	N/A	N/A

Chapter:3

SRP Section		DCD RAI Response							Other Drivers	Change ID Number for DCD forthcoming Revision	DCD Tracking Report Revision	DCD Revision
No.	Title	RAI No.	Question No.	Response Date	Impact on DCD	Impact on COLA	Impact on PRA	Response Status				
		498	03.09.02-68	2010/2/3	N	N	N		-	-	N/A	N/A
		498	03.09.02-69	2010/2/3	N	N	N		-	-	N/A	N/A
		498	03.09.02-70	2010/2/3	N	N	N		-	-	N/A	N/A
		498	03.09.02-71	2010/2/3	N	N	N		-	-	N/A	N/A
		498	03.09.02-72	2010/1/15	N	N	N		-	-	N/A	N/A
		498	03.09.02-73	2010/1/15	N	N	N		-	-	N/A	N/A
		498	03.09.02-74	2010/1/15	N	N	N		-	-	N/A	N/A
		498	03.09.02-75	2010/2/3	N	N	N		-	-	N/A	N/A
		498	03.09.02-76	2010/1/15	N	N	N		-	-	N/A	N/A
		498	03.09.02-77	2010/1/15	N	N	N		-	-	N/A	N/A
		498	03.09.02-78	2010/1/15	N	N	N		-	-	N/A	N/A
		498	03.09.02-79	2010/1/15	N	N	N		-	-	N/A	N/A
		498	03.09.02-80	2010/2/3	N	N	N		-	-	N/A	N/A
		498	03.09.02-81	2010/1/15	N	N	N		-	-	N/A	N/A
		498	03.09.02-82	2010/2/3	N	N	N		-	-	N/A	N/A
		498	03.09.02-83	2010/1/15	N	N	N		-	-	N/A	N/A
		498	03.09.02-84	2010/2/3	N	N	N		-	-	N/A	N/A
3.9.3	ASME Code Class 1, 2, and 3 Components, and Component Supports, and Core Support Structures											
3.9.4	Control Rod Drive Systems	569	03.09.04-2	2010/5/13	Y	N	N		-	DCD_03.09.04-2	3	3
		570	03.09.04-3	2010/5/19	Y	N	N		-	DCD_03.09.04-3	TBD	
		570	03.09.04-4	2010/5/19	Y	N	N		-	DCD_03.09.04-4	TBD	
		570	03.09.04-5	2010/5/19	Y	N	N		-	DCD_03.09.04-5	TBD	
		570	03.09.04-6	2010/5/19	N	N	N		-	-	N/A	N/A
3.9.5	Reactor Pressure Vessel Internals											
3.9.6	Functional Design, Qualification, and Inservice Testing Programs for Pumps, Valves, and Dynamic Restraints											
3.10	Seismic/Dynamic Qual of Mech/Elec Eqmt	486	03.10-10	2009/12/9	N	N	N		-	-	N/A	N/A
		486	03.10-11	2009/12/9	Y	N	N		-	DCD_03.10-11	1	3
		486	03.10-12	2009/12/9	Y	N	N		-	DCD_03.10-12	1	3
		486	03.10-13	2009/12/25	Y	N	N		-	DCD_03.10-13	1	3
		486	03.10-14	2009/12/25	N	N	N		-	-	N/A	N/A
		486	03.10-15	2009/12/25	N	N	N		-	-	N/A	N/A
		486	03.10-16	2009/12/25	N	N	N		-	-	N/A	N/A
		486	03.10-17	2009/12/25	N	N	N		-	-	N/A	N/A
3.11	Environmental Qual of Mech/Elec Eqmt	445	03.11-16	2009/9/29	Y	~~N~~ Y	N		-	DCD_03.11-16	0	3
		511	03.11-17	2010/2/2	N	N	N		-	-	N/A	N/A
		511	03.11-18	2010/2/2	N	N	N		-	-	N/A	N/A
		511	03.11-19	2010/2/2	N	N	N		-	-	N/A	N/A
		511	03.11-20	2010/2/2	N	N	N		-	-	N/A	N/A
		511	03.11-21	2010/2/2	Y	N	N		-	DCD_03.11-21	TBD	
		511	03.11-22	2010/2/2	N	N	N		-	-	N/A	N/A
		511	03.11-23	2010/2/2	N	N	N		-	-	N/A	N/A
		511	03.11-24	2010/2/2	Y	N	N		-	DCD_03.11-24	TBD	
		511	03.11-25	2010/2/2	N	N	N		-	-	N/A	N/A
		511	03.11-26	2010/2/2	N	N	N		-	-	N/A	N/A
		511	03.11-27	2010/2/2	N	N	N		-	-	N/A	N/A
		511	03.11-28	2010/2/2	N	N	N		-	-	N/A	N/A
		512	03.11-29	2010/1/28	N	N	N		-	-	N/A	N/A
		512	03.11-30	2010/1/28	N	N	N		-	-	N/A	N/A
		512	03.11-31	2010/1/28	N	N	N		-	-	N/A	N/A
		512	03.11-32	2010/1/28	N	N	N		-	-	N/A	N/A
		512	03.11-33	2010/1/28	N	N	N		-	-	N/A	N/A
		512	03.11-34	2010/1/28	Y	N	N		-	DCD_03.11-34	TBD	

Chapter:3

SRP Section		DCD RAI Response							Other Drivers	Change ID Number for DCD forthcoming Revision	DCD Tracking Report Revision	DCD Revision
No.	Title	RAI No.	Question No.	Response Date	Impact on DCD	Impact on COLA	Impact on PRA	Response Status				
		512	03.11-35	2010/1/28	N	N	N		-	-	N/A	N/A
3.12	ASME Code Class 1, 2, and 3	465	03.12-17	2009/12/2	Y	N	N		-	DCD_O3.12-17	1	3
	Piping Systems,	465	03.12-18	2009/11/18	N	N	N		-	-	N/A	N/A
	Piping Components	465	03.12-19	2009/11/18	Y	N	N		-	DCD_03.12-19	0	3
	and their Associated Supports	465	03.12-20	2009/11/18	Y	N	N		-	DCD_03.12-20	0	3
		465	03.12-21	2009/11/18	N	N	N		-	-	N/A	N/A
		465	03.12-22	2009/11/18	N	N	N		-	-	N/A	N/A
		465	03.12-23	2009/12/2	Y	N	N		-	DCD_03.12-23	1	3
		465	03.12-24	2009/11/18	Y	N	N		-	DCD_03.12-24	0	3
3.13	Threaded Fasteners -											
	ASME Code Class 1, 2, and 3											

Chapter:4

SRP Section		DCD RAI Response							Other Drivers	Change ID Number for DCD forthcoming Revision	DCD Tracking Report Revision	DCD Revision
No.	Title	RAI No.	Question No.	Response Date	Impact on DCD	Impact on COLA	Impact on PRA	Response Status				
4.2	Fuel System Design	476	4.1-***1	2009/12/11	N	N	N		-	-	N/A	N/A
		476	4.1-***2	2009/12/11					-			
		476	4.1-***3	2009/12/11	N	N	N		-	-	N/A	N/A
		477	4.2-***1	2009/12/18	N	N	N		-	-	N/A	N/A
		477	4.2-***2	2009/12/18	N	N	N		-	-	N/A	N/A
		477	4.2-***3	2009/12/18	N	N	N		-	-	N/A	N/A
		477	4.2-***4	2009/12/18	N	N	N		-	-	N/A	N/A
		477	4.2-***5	2009/12/18	N	N	N		-	-	N/A	N/A
		477	4.2-***6	2009/12/18	N	N	N		-	-	N/A	N/A
		477	4.2-***7	2009/12/18	N	N	N		-	-	N/A	N/A
		477	4.2-***8	2009/12/18	N	N	N		-	-	N/A	N/A
		477	4.2-***9	2009/12/18	N	N	N		-	-	N/A	N/A
		477	4.2-***10	2009/12/18	N	N	N		-	-	N/A	N/A
		477	4.2-***11	2009/12/18	N	N	N		-	-	N/A	N/A
		477	4.2-***12	2009/12/18	N	N	N		-	-	N/A	N/A
		477	4.2-***13	2009/12/18	N	N	N		-	-	N/A	N/A
		519	04.02-37	2/;25/2010	N	N	N		-	-	N/A	N/A
		519	04.02-38	2/;25/2010	N	N	N		-	-	N/A	N/A
		519	04.02-39	2/;25/2010	N	N	N		-	-	N/A	N/A
		519	04.02-40	2/;25/2010	N	N	N		-	-	N/A	N/A
		519	04.02-41	2/;25/2010	N	N	N		-	-	N/A	N/A
		519	04.02-42	2/;25/2010	N	N	N		-	-	N/A	N/A
		572	04.02-43	2010/5/14	N	N	N		-	-	N/A	N/A
		572	04.02-44	2010/5/14	N	N	N		-	-	N/A	N/A
4.3	Nuclear Design	545	04.03-48	2010/4/28	N	N	N		-	-	N/A	N/A
		545	04.03-49	2010/4/28	N	N	N		-	-	N/A	N/A
		545	04.03-50	2010/4/2	N	N	N		-	-	N/A	N/A
		545	04.03-51	2010/4/28	N	N	N		-	-	N/A	N/A
		545	04.03-52	2010/4/28	N	N	N		-	-	N/A	N/A
		545	04.03-53	2010/4/28	N	N	N		-	-	N/A	N/A
		545	04.03-54	2010/4/2	N	N	N		-	-	N/A	N/A
		545	04.03-55	2010/4/2	N	N	N		-	-	N/A	N/A
		545	04.03-56	2010/4/2	N	N	N		-	-	N/A	N/A
		545	04.03-57	2010/4/28	N	N	N		-	-	N/A	N/A
		545	04.03-58	2010/4/2	N	N	N		-	-	N/A	N/A
		545	04.03-59	2010/4/2	N	N	N		-	-	N/A	N/A
		545	04.03-60	2010/4/2	N	N	N		-	-	N/A	N/A
		545	04.03-61	2010/4/2	N	N	N		-	-	N/A	N/A
		545	04.03-62	2010/4/28	N	N	N		-	-	N/A	N/A
		545	04.03-63	2010/4/2	N	N	N		-	-	N/A	N/A
		545	04.03-64	2010/4/2	N	N	N		-	-	N/A	N/A
		545	04.03-65	2010/4/28	N	N	N		-	-	N/A	N/A
		545	04.03-66	2010/4/28	N	N	N		-	-	N/A	N/A
4.4	Thermal and Hydraulic Design	377	04.04-4	2009/6/25	N	N	N		-	-	N/A	N/A
				2009/12/2	N	N	N		-	-	N/A	N/A
		377	04.04-5	2009/6/25	N	N	N		-	-	N/A	N/A
		377	04.04-6	2009/6/25	N	N	N		-	-	N/A	N/A
		378	04.04-7	2009/6/25	N	N	N		-	-	N/A	N/A
		530	04.04-8	2010/3/4	N	N	N		-	-	N/A	N/A
		530	04.04-9	2010/3/4	N	N	N		-	-	N/A	N/A
		530	04.04-10	2010/3/4	N	N	N		-	-	N/A	N/A
		530	04.04-11	2010/3/4	N	N	N		-	-	N/A	N/A
		530	04.04-12	2010/3/4	N	N	N		-	-	N/A	N/A
		530	04.04-13	2010/3/4	N	N	N		-	-	N/A	N/A
		530	04.04-14	2010/3/4	N	N	N		-	-	N/A	N/A
		530	04.04-15	2010/3/4	Y	N	N		-	DCD_04.04-15	3	3
		530	04.04-16	2010/3/4	N	N	N		-	-	N/A	N/A
		530	04.04-17	2010/3/4	N	N	N		-	-	N/A	N/A
		530	04.04-18	2010/3/4	N	N	N		-	-	N/A	N/A
		530	04.04-19	2010/3/4	N	N	N		-	-	N/A	N/A
		530	04.04-20	2010/3/4	N	N	N		-	-	N/A	N/A
		530	04.04-21	2010/3/4	N	N	N		-	-	N/A	N/A
		530	04.04-22	2010/3/4	N	N	N		-	-	N/A	N/A
		530	04.04-23	2010/3/4	N	N	N		-	-	N/A	N/A
		530	04.04-24	2010/3/4	N	N	N		-	-	N/A	N/A
		530	04.04-25	2010/3/4	N	N	N		-	-	N/A	N/A

Chapter:4

SRP Section		DCD RAI Response							Other Drivers	Change ID Number for DCD forthcoming Revision	DCD Tracking Report Revision	DCD Revision
No.	Title	RAI No.	Question No.	Response Date	Impact on DCD	Impact on COLA	Impact on PRA	Response Status				
		530	04.04-26	2010/3/4	N	N	N		-	-	N/A	N/A
		530	04.04-27	2010/3/4	N	N	N		-	-	N/A	N/A
		530	04.04-28	2010/3/4	N	N	N		-	-	N/A	N/A
		530	04.04-29	2010/3/4	N	N	N		-	-	N/A	N/A
		530	04.04-30	2010/3/4	N	N	N		-	-	N/A	N/A
		530	04.04-31	2010/3/4	N	N	N		-	-	N/A	N/A
		530	04.04-32	2010/3/4	N	N	N		-	-	N/A	N/A
		530	04.04-33	2010/3/4	N	N	N		-	-	N/A	N/A
		530	04.04-34	2010/3/4	N	N	N		-	-	N/A	N/A
		530	04.04-35	2010/3/4	N	N	N		-	-	N/A	N/A
		530	04.04-36	2010/3/4	N	N	N		-	-	N/A	N/A
		530	04.04-37	2010/3/4	N	N	N		-	-	N/A	N/A
		530	04.04-38	2010/3/4	N	N	N		-	-	N/A	N/A
		530	04.04-39	2010/3/4	N	N	N		-	-	N/A	N/A
		530	04.04-40	2010/3/4	N	N	N		-	-	N/A	N/A
4.5.1	Control Rod Drive	457	04.5.01-8	10/29/2009	Y	N	N		-	DCD_04.5.01-8	0	3
	Structural Materials	457	04.5.01-9	10/29/2009	Y	N	N		-	DCD_04.5.01-9	0	3
		457	04.5.01-10	10/29/2009	Y	N	N		-	DCD_04.5.01-10	0	3
				2010/3/29	Y	N	N		-	DCD_04.5.01-10	3	3
4.5.2	Reactor Internal and Core	502	4.5.2-17	2010/1/18	N	N	N		-	-	N/A	N/A
	Support Structure Materials	502	4.5.2-18	2010/1/18	N	N	N		-	-	N/A	N/A
				2010/1/21	N	N	N		-	-	N/A	N/A
		502	4.5.2-19	2010/1/18	N	N	N		-	-	N/A	N/A
		502	4.5.2-20	2010/1/18	N	N	N		-	-	N/A	N/A
		527	4.5.2-21	2010/3/2	N	N	N		-	-	N/A	N/A
		573	4.5.2-22	2010/5/19	N	N	N		-	-	N/A	N/A
4.6	Functional Design											
	of Control Rod Drive System											

Chapter:5

SRP Section		DCD RAI Response							Other Drivers	Change ID Number for DCD forthcoming Revision	DCD Tracking Report Revision	DCD Revision
No.	Title	RAI No.	Question No.	Response Date	Impact on DCD	Impact on COLA	Impact on PRA	Response Status				
5.2.1.1	Compliance with the Codes and Standards Rule, 10 CFR 50.55a	264	05.02.01.01-1	2009/10/2	Y	Y	N		-	DCD_05.02.01.01-1	-	2
				2009/12/15	Y	Y	N		-	DCD_05.02.01.01-1	TBD	
5.2.1.2	Applicable Code Cases	575	05.02.01.02-7	2010/5/7	Y	N	N		-	DCD_05.02.01.02-7	TBD	
5.2.2	Overpressure Protection											
5.2.3	Reactor Coolant Pressure Boundary Materials	289	05.02.03-12	2010/3/1	Y	N	N		-	DCD_O5.02.03-12	TBD	
		509	05.02.03-18	2010/1/29	N	N	N		-	-	N/A	N/A
		-	-	-	-	-	-	-	COL 5.2(4) revised	MAP-05-001	TBD	
		-	-	-	-	-	-	-	COL 5.2(5) revised	MAP-05-002	TBD	
5.2.4	Reactor Coolant Pressure Boundary Inservice Inspection and Testing	254	05.02.04-8	2009/4/17	Y	N	N		-	DCD_05.02.04.-8	3	2
				2009/10/2	Y	Y	N		-	DCD_05.02.04-8	-	2
5.2.5	Reactor Coolant Pressure Boundary Leakage Detection	478	05.02.05-11	2009/12/2	Y	N	N		-	DCD_05.02.05-11	1	3
		549	05.02.05-12	2010/4/9	Y	N	N		-	DCD_05.02.05-12	3	3
5.3.1	Reactor Vessel Materials											
	Pressure-Temperature Limits, Upper-Shelf Energy, and Pressurized Thermal Shock											
5.3.3	Reactor Vessel Integrity											
5.4	Reactor Coolant System Component and Subsystem Design											
5.4.1.1	Pump Flywheel Integrity (PWR)											
5.4.2.1	Steam Generator Materials											
5.4.2.2	Steam Generator Program											
5.4.7	Residual Heat Removal (RHR) System	548	05.04.07-12	2010/4/6	Y	N	N		-	DCD_05.04.07-12	TBD	
5.4.11	Pressurizer Relief Tank											
5.4.12	Reactor Coolant System High Point Vents	OI	05.04.12-1	2009/10/2	N	N	N		-	-	N/A	N/A

Chapter:6

SRP Section		DCD RAI Response							Other Drivers	Change ID Number for DCD forthcoming Revision	DCD Tracking Report Revision	DCD Revision
No.	Title	RAI No.	Question No.	Response Date	Impact on DCD	Impact on COLA	Impact on PRA	Response Status				
6.1.1	Engineered Safety Features	379	06.01.01-9	2009/7/10	Y	N	N		-	DCD_06.01.01-9	4	2
	Materials			2010/3/30	Y	N	N		-	DCD_06.01.01-9	3	3
		379	06.01.01-10	2009/7/10	Y	N	N		-	DCD_06.01.01-10	4	2
		487	06.01.01-11	2009/12/3	Y	N	N		-	DCD_06.01.01-11	1	3
		487	06.01.01-12	2009/12/3	N	N	N		-	-	N/A	N/A
		544	06.01.01-13	2010/4/21	Y	N	N		-	DCD_06.01.01-13	3	3
		544	06.01.01-14	2010/4/21	Y	N	N		-	DCD_06.01.01-14	3	3
		544	06.01.01-15	2010/4/21	N	N	N		-	-	N/A	N/A
		544	06.01.01-16	2010/4/21	N	N	N		-	-	N/A	N/A
		544	06.01.01-17	2010/4/21	Y	N	N		-	DCD_06.01.01-17	3	3
		544	06.01.01-18	2010/4/21	N	N	N		-	-	N/A	N/A
		544	06.01.01-19	2010/4/21	Y	N	N		-	DCD_06.01.01-19	3	3
6.1.2	Protective Coating Systems (Paints)											
	Organic Materials											
6.2.1	Containment Functional Design											
	Organic Materials											
6.2.1.2	Subcompartment Analysis											
6.2.1.3	Mass and Energy Release											
	Analysis for Postulated											
	Loss-of-Coolant Accidents											
6.2.1.4	Mass and Energy Release											
	Analysis for Postulated											
	Secondary System Pipe Ruptures											
	(LOCAs)											
6.2.1.5	Min. Containment Pressure											
	Analysis for											
	for Emergency Core Cooling Sys.											
	Performance Capability Studies											
6.2.2	Containment	85	06.02.02-10	2009/11/12	Y	N	N	fin.	-	DCD_06.02.02-10	1	2
	Heat Removal Systems	85	06.02.02-11	2009/11/12	N	N	N	fin.	-	-	N/A	N/A
		263	06.02.02-12	2009/3/31	Y	N	N		-	DCD_06.02.02-12	3	2
		263	06.02.02-13	2009/3/31	N	N	N		-	-	N/A	N/A
		263	06.02.02-14	2009/3/31	N	N	N		-	-	N/A	N/A
		263	06.02.02-15	2009/3/31	N	N	N		-	-	N/A	N/A
		278	06.02.02-16	2009/4/10	Y	N	N		-	DCD_06.02.02-16	3	2
		330	06.02.02-17	2009/5/18	N	N	N		-	-	N/A	N/A
		349	06.02.02-18	2009/5/12	N	N	N		-	-	N/A	N/A
		354	06.02.02-19	2009/7/7	N	N	N		-	-	N/A	N/A
		354	06.02.02-20	2009/7/7	N	N	N		-	-	N/A	N/A
		354	06.02.02-21	2009/7/7	N	N	N		-	-	N/A	N/A
		354	06.02.02-22	2009/7/7	N	N	N		-	-	N/A	N/A
		354	06.02.02-23	2009/7/7	N	N	N		-	-	N/A	N/A
		354	06.02.02-24	2009/7/7	N	N	N		-	-	N/A	N/A
				10/16/2009	Y	N	N		-	DCD_06.02.02-24	TBD	
		354	06.02.02-25	2009/7/7	Y	N	N		-	DCD_06.02.02-25	4	2
		354	06.02.02-26	2009/7/7	N	N	N		-	-	N/A	N/A
		354	06.02.02-27	2009/7/7	Y	N	N		-	DCD_06.02.02-27	4	2
		354	06.02.02-28	2009/7/7	N	N	N		-	-	N/A	N/A
		354	06.02.02-29	2009/7/7	N	N	N		-	-	N/A	N/A
		354	06.02.02-30	2009/7/7	N	N	N		-	-	N/A	N/A
		354	06.02.02-31	2009/7/7	Y	Y	N		-	DCD_06.02.02-31	4	2
				10/06/2009	Y	Y	N		-	DCD_06.02.02-31	-	2
		354	06.02.02-32	2009/7/7	Y	Y	N		-	DCD_06.02.02-32	-	2
				10/06/2009	Y	N	N		-	DCD_06.02.02-32	-	2
		354	06.02.02-33	2009/7/7	Y	Y	N		-	DCD_06.02.02-33	-	2
				10/06/2009	Y	N	N		-	DCD_06.02.02-33	-	2
		354	06.02.02-34	2009/7/7	Y	Y	N		-	DCD_06.02.02-34	-	2

Chapter:6

SRP Section		DCD RAI Response							Other Drivers	Change ID Number for DCD forthcoming Revision	DCD Tracking Report Revision	DCD Revision
No.	Title	RAI No.	Question No.	Response Date	Impact on DCD	Impact on COLA	Impact on PRA	Response Status				
		354	06.02.02-34	10/06/2009	Y	N	N		-	DCD_06.02.02-34	-	2
		354	06.02.02-35	2009/7/7	Y	Y	N		-	DCD_06.02.02-35	-	2
				10/06/2009	Y	N	N		-	DCD_06.02.02-35	-	2
		354	06.02.02-36	2009/7/7	Y	Y	N		-	DCD_06.02.02-36	-	2
				10/06/2009	Y	N	N		-	DCD_06.02.02-36	-	2
		354	06.02.02-37	2009/7/7	N	N	N		-	-	N/A	N/A
		354	06.02.02-38	2009/7/7	Y	N	N		-	DCD_06.02.02-38	-	2
		354	06.02.02-39	2009/7/7	N	N	N		-	-	N/A	N/A
		354	06.02.02-40	2009/7/7	Y	N	N		-	DCD_06.02.02-40	4	2
		354	06.02.02-41	2009/7/7	Y	N	N		-	DCD_06.02.02-41	-	2
		354	06.02.02-42	2009/7/7	Y	N	N		-	DCD_06.02.02-42	4	2
		354	06.02.02-43	2009/7/7	Y	N	N		-	DCD_06.02.02-43	4	2
		354	06.02.02-44	2009/7/17	Y	N	N		-	DCD_06.02.02-44	TBD	
		366	06.02.02-45	2009/6/11	N	N	N		-	-	N/A	N/A
		366	06.02.02-46	2009/6/11	Y	N	N		-	DCD_06.02.02-46	3	2
		366	06.02.02-47	2009/6/11	N	N	N		-	-	N/A	N/A
		366	06.02.02-48	2009/6/11	N	N	N		-	-	N/A	N/A
		366	06.02.02-49	2009/6/11	N	N	N		-	-	N/A	N/A
		366	06.02.02-50	2009/6/11	N	N	N		-	-	N/A	N/A
		366	06.02.02-51	2009/6/11	N	N	N		-	-	N/A	N/A
		422	06.02.02-52	2010/1/21	N	N	N		-	-	N/A	N/A
		466	06.02.02-53	2009/11/24	N	N	N		-	-	N/A	N/A
		466	06.02.02-54	2009/11/24	N	N	N		-	-	N/A	N/A
		466	06.02.02-55	2009/11/24	Y	N	N		-	DCD_06.02.02-55	TBD	
		-	-	-	-	-	-	-	COL 6.2(9) deleted	MAP-06-007	4	2
6.2.4	Containment Isolation System	553	06.02.04-53	2010/4/19	Y	N	N		-	DCD_06.02.04-53	3	3
		553	06.02.04-54	2010/4/19	Y	N	N		-	DCD_06.02.04-54	TBD	
6.2.5	Combustible Gas Control in Containment	471	6.2.5-35	11/6/2009	Y	N	N		-	DCD_6.2.5-35	0	3
			6.2.5-36									
		551	6.2.5-37	2010/4/20	Y	N	N		-	DCD_6.2.5-37	TBD	
		551	6.2.5-38	2010/4/20	N	N	N		-	-	N/A	N/A
6.2.6	Containment Leakage Testing	472	06.02.06-23	2009/11/13	Y	N	N		-	DCD_06.02.06-23	1	3
		472	06.02.06-24	2009/11/13	Y	N	N		-	DCD_06.02.06-24	1	3
		472	06.02.06-25	2009/11/13	N	N	N		-	-	N/A	N/A
		472	06.02.06-26	2009/11/27	Y	N	N		-	DCD_06.02.06-26	1	3
		472	06.02.06-27	2009/11/27	Y	N	N		-	DCD_06.02.06-27	1	3
		552	06.02.06-28	2010/4/16	N	N	N		-	-	N/A	N/A
		552	06.02.06-29	2010/4/16	N	N	N		-	-	N/A	N/A
		552	06.02.06-30	2010/4/16	Y	N	N		-	DCD_06.02.06-30	3	3
6.2.7	Fracture Prevention of Containment Pressure Boundary											
6.3	Emergency Core Cooling System											
6.4	Control Room Habitability System	49	06.04-9	2008/9/16	Y	N	N	fin.	-	DCD_06.04-9	(1)	2
		473		11/13/2009	Y	N	N		-	DCD_06.04-9	0	3
		501	06.04-10	2010/1/21	N	N	N		-	-	N/A	N/A
		559	06.04-11	2010/5/20	Y	N	N		-	DCD_06.04-11	TBD	
		559	06.04-12	2010/5/20	Y	N	N		-	DCD_06.04-12	TBD	
		559	06.04-13	2010/5/20	Y	N	N		-	DCD_06.04-13	TBD	
6.5.1	ESF Atmosphere Cleanup Systems	558	06.05.01-9	2010/5/27	Y	N	N		-	DCD_06.05.01-9	TBD	
		558	06.05.01-10	2010/4/22	N	N	N		-	-	N/A	N/A
		558	06.05.01-11	2010/4/22	Y	N	N		-	DCD_06.05.01-11	3	3
		558	06.05.01-12	2010/4/22	Y	N	N		-	DCD_06.05.01-12	3	3
		558	06.05.01-13	2010/4/22	Y	N	N		-	DCD_06.05.01-13	3	3
		558	06.05.01-14	2010/4/22	Y	N	N		-	DCD_06.05.01-14	3	3

Chapter:6

SRP Section		DCD RAI Response							Other Drivers	Change ID Number for DCD forthcoming Revision	DCD Tracking Report Revision	DCD Revision
No.	Title	RAI No.	Question No.	Response Date	Impact on DCD	Impact on COLA	Impact on PRA	Response Status				
		558	06.05.01-15	2010/4/22	Y	N	N		-	DCD_06.05.01-15	3	3
		558	06.05.01-16	2010/5/27	Y	N	N		-	DCD_06.05.01-16	TBD	
		558	06.05.01-17	2010/5/27	Y	N	N		-	DCD_06.05.01-17	TBD	
		558	06.05.01-18	2010/4/22	Y	N	N		-	DCD_06.05.01-15	3	3
6.5.2	Containment Spray	460	06.05.02-7	11/13/2009	N	N	N		-	-	N/A	N/A
	as a Fission Product	517	06.05.02-8	2010/2/25	N	N	N		-	-	N/A	N/A
	Cleanup System											
6.5.3	Fission Product											
	Control Systems and Structures											
6.5.5	Pressure Suppression Pool											
	as a											
	Fission Product Cleanup System											
6.6	Inservice Inspection and Testing											
	of Class 2 and 3 Components											
6.6.2	Inservice Inspection and Testing											
	of Class 2 and 3 Components											
6.6.3	Inservice Inspection and Testing											
	of Class 2 and 3 Components											
6.6.4	Inservice Inspection and Testing											
	of Class 2 and 3 Components											

Chapter:7

SRP Section		DCD RAI Response							Other Drivers	Change ID Number for DCD forthcoming Revision	DCD Tracking Report Revision	DCD Revision
No.	Title	RAI No.	Question No.	Response Date	Impact on DCD	Impact on COLA	Impact on PRA	Response Status				
7.1	Instrumentation and Controls -- Introduction	516	07.01-C Appendix-1	2010/2/15	N	N	N		-	-	N/A	N/A
7.2	Reactor Trip System											
7.3	Engineered Safety Features Systems											
7.4	Safe Shutdown Systems											
7.5	Information Systems Important to Safety	568	07.05-18	2010/4/28	Y	N	N		-	DCD_07.05-18	3	3
7.6	Interlock Systems Important to Safety											
7.7	Control Systems											
7.8	Diverse I&C Systems											
7.9	Data Communication Systems											
7-14	Branch Technical Position - Guidance on Software Reviews for Digital Computer Based Instrument and Control Systems	525	07-14BTP-30	2010/3/3	N	N	N		-	-	N/A	N/A
		525	07-14BTP-31	2010/3/3	N	N	N		-	-	N/A	N/A
		525	07-14BTP-32	2010/3/3	N	N	N		-	-	N/A	N/A
		525	07-14BTP-33	2010/3/3	N	N	N		-	-	N/A	N/A
		525	07-14BTP-34	2010/3/3	N	N	N		-	-	N/A	N/A
		525	07-14BTP-35	2010/3/3	N	N	N		-	-	N/A	N/A
		525	07-14BTP-36	2010/3/3	N	N	N		-	-	N/A	N/A
		525	07-14BTP-37	2010/3/3	N	N	N		-	-	N/A	N/A
		525	07-14BTP-38	2010/3/3	N	N	N		-	-	N/A	N/A
		525	07-14BTP-39	2010/3/3	N	N	N		-	-	N/A	N/A
		525	07-14BTP-40	2010/3/3	N	N	N		-	-	N/A	N/A
		525	07-14BTP-41	2010/3/3	N	N	N		-	-	N/A	N/A

Chapter:9

SRP Section		DCD RAI Response							Other Drivers	Change ID Number for DCD forthcoming Revision	DCD Tracking Report Revision	DCD Revision
No.	Title	RAI No.	Question No.	Response Date	Impact on DCD	Impact on COLA	Impact on PRA	Response Status				
9.1.1	Criticality Safety of Fresh and Spent Fuel Storage and Handling											
9.1.2	New and Spent Fuel Storage											
9.1.3	Spent Fuel Pool Cooling and Cleanup System											
9.1.4	Light Load Handling System (Related to Refueling)	507	09.01.04-16	2010/2/15	Y	N	N		-	DCD_09.01.04-16	2	3
9.1.5	Overhead Heavy Load Handling Systems											
9.2.1	Station Service Water System											
9.2.2	Reactor Auxiliary Cooling Water Systems	567	09.02.02-46	2010/5/7	Y	N	N		-	DCD_09.02.02-46	3	3
9.2.4	Potable and Sanitary Water Systems											
9.2.5	Ultimate Heat Sink											
9.2.6	Condensate Storage Facilities											
9.3.1	Compressed Air System											
9.3.2	Process and Post-accident Sampling Systems	461	09.03.02-12	2009/11/17	Y	N	N		-	DCD_09.03.02-12	1	3
		526	09.03.02-13	2010/4/7	Y	Y	N		-	DCD_09.03.02-13	3	3
		526	09.03.02-14	2010/4/7	N	N	N		-	-	N/A	N/A
		526	09.03.02-15	2010/4/7	Y	N	N		-	DCD_09.03.02-15	3	3
		526	09.03.02-16	2010/4/7	N	N	N		-	-	N/A	N/A
9.3.3	Equipment and Floor Drainage System	426	09.03.03-15	2009/9/14	Y	N	N		-	DCD_09.03.03-15	-	2
		426	09.03.03-16	2009/9/14	Y	N	N		-	DCD_09.03.03-16	0	3
		426	09.03.03-17	2009/9/14	Y	N	N		-	DCD_09.03.03-17	-	2
9.3.4	Chemical and Volume Control Syst (PWR) (Including Boron Recovery System)	384	09.03.04-10	2009/7/17	N	N	N		-	-	N/A	N/A
				2010/4/7	Y	Y	N		-	DCD_09.03.04-10	3	3
9.4.1	Control Room Area Ventilation System	327	09.04.01-9	2010/1/29	Y	N	N		-	DCD_09.04.01-9	2	3
		475	09.04.01-12A	2009/11/20	Y	Y	N		-	DCD_09.04.01-12A	1	3
		475	09.04.01-13A	2009/11/20	Y	N	N		-	DCD_09.04.01-13A	1	3
		475	09.04.01-14A	2009/11/20	N	N	N		-	-	N/A	N/A
		484	09.04.01-15A	2009/12/9	N	N	N		-	-	N/A	N/A
9.4.2	Spent Fuel Pool Area Ventilation System	539	09.04.02-4	2010/4/1	Y	N	N		-	DCD_09.04.02-4	3	3
		539	09.04.02-5	2010/4/1	Y	N	N		-	DCD_09.04.02-5	3	3
9.4.3	Auxiliary and Radwaste Area Ventilation System	483	09.04.03-08	2010/2/5	Y	N	N		-	DCD_09.04.03-08	2	3
		483	09.04.03-09	2010/2/5	Y	N	N		-	DCD_09.04.03-09	2	3

Chapter:9

SRP Section		DCD RAI Response							Other Drivers	Change ID Number for DCD forthcoming Revision	DCD Tracking Report Revision	DCD Revision
No.	Title	RAI No.	Question No.	Response Date	Impact on DCD	Impact on COLA	Impact on PRA	Response Status				
		483	09.04.03-10	2010/2/5	N	N	N		-	-	N/A	N/A
9.4.4	Turbine Area Ventilation System	541	09.04.03-4	2010/3/30	N	N	N		-	-	N/A	N/A
		541	09.04.04-5	2010/3/30	Y	N	N		-	DCD_09.04.04-5	3	3
9.4.5	Engineered Safety Feature Ventilation System	474	09.04.05-10	11/13/2009	Y	N	N		-	DCD_09.04.05-10	0	3
9.5.1	Fire Protection Program	537	09.05.01-18	04/13/2010	Y	N	N		-	DCD_09.05.01-18	3	3
		537	09.05.01-19	04/13/2010	Y	N	N		-	DCD_09.05.01-19	3	3
9.5.2	Communications Systems											
9.5.3	Lighting Systems											
9.5.4	Emergency Diesel Engine Fuel Oil Storage and Transfer System	467	09.05.04-43	11/10/2009	Y	Y	N		-	DCD_09.05.04-43	1	3
		468	09.05.04-44	2009/12/10	Y	Y	N		-	DCD_09.05.04-44	1	3
		468	09.05.04-45	2009/12/10	Y	N	N		-	DCD_09.05.04-45	1	3
		468	09.05.04-46	2009/12/10	Y	N	N		-	DCD_09.05.04-46	1	3
		468	09.05.04-47	2009/12/10	Y	N	N		-	DCD_09.05.04-47	1	3
		468	09.05.04-48	2009/12/10	Y	N	N		-	DCD_09.05.04-48	1	3
		468	09.05.04-49	2009/12/10	N	N	N		-	-	N/A	N/A
9.5.5	Emergency Diesel Engine Cooling Water System											
9.5.6	Emergency Diesel Engine Starting System	504	09.05.06-24	12/23/09	Y	N	N		-	DCD_09.05.06-24	1	3
		504	09.05.06-25	12/23/09	Y	N	N		-	DCD_09.05.06-25	1	3
9.5.7	Emergency Diesel Engine Lubrication System	469	09.05.07-18	11/6/2009	N	N	N		-	-	N/A	N/A
		469	09.05.07-19	11/6/2009	N	N	N		-	-	N/A	N/A
		506	09.05.07-20	2010/1/29	Y	N	N		-	DCD_09.05.07-20	2	3
		506	09.05.07-21	2010/1/29	N	N	N		-	-	N/A	N/A
		506	09.05.07-22	2010/1/29	Y	N	N		-	DCD_09.05.07-22	2	3
		506	09.05.07-23	2010/1/29	Y	N	N		-	DCD_09.05.07-23	2	3
		556	09.05.07-24	2010/4/27	Y	N	N		-	DCD_09.05.07-24	3	3
9.5.8	Emergency Diesel Engine Combustion Air Intake and Exhaust System	470	09.05.08-18	2009/12/2	Y	N	N		-	DCD_09.05.08-18	1	3
		470	09.05.08-19	2009/12/2	N	N	N		-	-	N/A	N/A
		470	09.05.08-20	2009/12/2	Y	N	N		-	DCD_09.05.08-20	1	3
		470	09.05.08-21	2009/12/2	Y	N	N		-	DCD_09.05.08-21	1	3
		470	09.05.08-22	2009/12/2	Y	N	N		-	DCD_09.05.08-22	1	3
		505	09.05.08-23	2010/2/1	N	N	N		-	-	N/A	N/A
		505	09.05.08-24	2010/2/1	N	N	N		-	-	N/A	N/A
		505	09.05.08-25	2010/2/1	Y	N	N		-	DCD_09.05.08-25	2	3

Chapter:11

SRP Section		DCD RAI Response							Other Drivers	Change ID Number for DCD forthcoming Revision	DCD Tracking Report Revision	DCD Revision
No.	Title	RAI No.	Question No.	Response Date	Impact on DCD	Impact on COLA	Impact on PRA	Response Status				
11.1	Source Terms											
11.2	Liquid Waste Management System	458	11.02-21	2009/10/26	N	N	N		-	-	N/A	N/A
		462	11.02-22	2009/11/17	Y	N	N		-	DCD_11.02-22	1	3
		462	11.02-23	2009/11/17	N	N	N		-	-	N/A	N/A
		462	11.02-24	2009/11/17	N	N	N		-	-	N/A	N/A
		462	11.02-25	2009/11/17	Y	N	N		-	DCD_11.02-25	0	3
		462	11.02-26	2009/11/17	N	N	N		-	-	N/A	N/A
		462	11.02-27	2009/11/17	Y	N	N		-	DCD_11.02-27	0	3
		523	11.02-28	2010/3/15	Y	N	N		-	DCD_11.02-28	3	3
		523	11.02-29	2010/3/15	Y	Y	N		-	DCD_11.02-29	3	3
		523	11.02-30	2010/3/15	Y	N	N		-	DCD_11.02-30	3	3
		523	11.02-31	2010/3/15	Y	N	N		-	DCD_11.02-31	3	3
		523	11.02-32	2010/3/15	Y	N	N		-	DCD_11.02-32	3	3
11.3	Gaseous Waste Management System	533	11.03-15	2010/4/20	Y	N	N		-	DCD_11.03-15	3	3
		535	11.03-16	2010/4/20	Y	N	N		-	DCD_11.03-16	3	3
		535	11.03-17	2010/4/20	Y	N	N		-	DCD_11.03-17	3	3
11.4	Solid Waste Management System	534	11.04-19	2010/4/20	Y	Y	N		-	DCD_11.04-19	3	3
		536	11.04-20	2010/4/20	Y	N	N		-	DCD_11.04-20	3	3
		536	11.04-21	2010/4/20	Y	N	N		-	DCD_11.04-21	3	3
11.5	Process and Effluent Radiological Monitoring Instrumentation and Sampling Systems	522	11.05-18	2010/3/8	Y	N	N		-	DCD_11.05-18	3	3

Chapter:12

SRP Section		DCD RAI Response							Other Drivers	Change ID Number for DCD forthcoming Revision	DCD Tracking Report Revision	DCD Revision
No.	Title	RAI No.	Question No.	Response Date	Impact on DCD	Impact on COLA	Impact on PRA	Response Status				
12.1	Assuring that											
	Occupational Radiation Exposures											
	Are As Low As											
	Is Reasonably Achievable											
12.2	Radiation Sources	427	12.02-19	2009/9/28	Y	N	N		-	DCD_12.02-19	0	3
		427	12.02-21	2009/9/28	Y	N	N		-	DCD_12.02-21	0	3
		427	12.02-22	2009/9/28	Y	N	N		-	DCD_12.02-22	0	3
		532	12.02-23	2010/4/9	Y	N	N		-	DCD_12.02-23	3	3
		532	12.02-24	2010/4/9	N	N	N		-	-	N/A	N/A
		532	12.02-25	2010/4/9	Y	N	N		-	DCD_12.02-25	3	3
		532	12.02-26	2010/4/9	Y	N	N		-	DCD_12.02-26	3	3
		532	12.02-27	2010/4/9	Y	N	N		-	DCD_12.02-27	3	3
		532	12.02-28	2010/4/9	Y	N	N		-	DCD_12.02-28	3	3
		532	12.02-29	2010/4/9	Y	Y	N		-	DCD_12.02-29	3	3
		532	12.02-30	2010/4/9	Y	Y	N		-	DCD_12.02-30	3	3
		561	12.02-31	2010/4/9	N	N	N		-	-	N/A	N/A
12.3-	Radiation Protection	425	12.03-12.04-21	2009/9/4	Y	N	N		-	DCD_12.03-12.04-21	0	3
12.4	Design Features	428	12.03-12.04-22	2009/9/28	N	N	N		-	-	N/A	N/A
		428	12.03-12.04-23	2009/9/28	N	N	N		-	-	N/A	N/A
		428	12.03-12.04-24	2009/9/28	N	N	N		-	-	N/A	N/A
	D	429	12.03-12.04-25	2009/9/28	Y	N	N		-	DCD_12.03-12.04-25	0	3
		429	12.03-12.04-26	2009/9/28	Y	Y	N		-	DCD_12.03-12.04-26	0	3
		429	12.03-12.04-27	2009/9/28	Y	N	N		-	DCD_12.03-12.04-27	0	3
		429	12.03-12.04-28	2009/9/28	N	N	N		-	-	N/A	N/A
		429	12.03-12.04-29	2009/9/28	N	N	N		-	-	N/A	N/A
		429	12.03-12.04-30	2009/9/28	Y	N	N		-	DCD_12.03-12.04-30	0	3
		429	12.03-12.04-31	2009/9/28	Y	N	N		-	DCD_12.03-12.04-31	0	3
		453	12.03-12.04-32	2009/9/16	N	N	N		-	-	N/A	N/A
		524	12.03-12.04-33	2010/3/12	N	N	N		-	-	N/A	N/A
		524	12.03-12.04-34	2010/3/12	N	N	N		-	-	N/A	N/A
		524	12.03-12.04-35	2010/3/12	N	N	N		-	-	N/A	N/A
		524	12.03-12.04-36	2010/3/12	Y	N	N		-	DCD_12.03-12.04-36	3	3
12.5	Operational Radiation											
	Protection Program											

Chapter:14

SRP Section		DCD RAI Response							Other Drivers	Change ID Number for DCD forthcoming Revision	DCD Tracking Report Revision	DCD Revision
No.	Title	RAI No.	Question No.	Response Date	Impact on DCD	Impact on COLA	Impact on PRA	Response Status				
14.2	Initial Plant Test Program -	455	14.02-119	2009/10/1	Y	N	N		-	DCD_14.02-119	-	2
	Design Certification and	521	14.02-120	2010/2/5	Y	Y	N		-	DCD_14.02-120	2	3
	New License Applicants	554	14.02-121	2010/4/15	Y	N	N		-	DCD_14.02-121	3	3
14.3	Inspections, Tests, Analyses,											
	and Acceptance Criteria											
14.3.2	Structural and Systems Engineering	452	14.03.02-9	2009/10/1	Y	N	N		-	DCD_14.03.02-9	-	2
	Inspections, Tests, Analyses,	452	14.03.02-10	2009/10/1	Y	N	N		-	DCD_14.03.02-10	-	2
	and Acceptance Criteria	452	14.03.02-11	2009/10/1	Y	N	N		-	DCD_14.03.02-11	-	2
		452	14.03.02-12	2009/10/1	Y	N	N		-	DCD_14.03.02-12	-	2
		452	14.03.02-13	2009/10/8	Y	N	N		-	DCD_14.03.02-13	-	2
		452	14.03.02-14	2009/10/1	Y	N	N		-	DCD_14.03.02-14	-	2
14.3.3	Piping Systems and Components	499	14.03.03-23	2009/12/16	Y	N	N		-	DCD_14.03.03-23	1	3
	and Acceptance Criteria											
14.3.4	Reactor Systems	503	14.03.04-42	2009/12/21	Y	N	N		-	DCD_14.03.04-42	1	3
14.3.5	Instrumentation and Controls -	515	14.03.05-32	2010/1/28	Y	N	N		-	DCD_14.03.05-32	2	3
14.3.6	Electrical Systems -											
	Inspections, Tests, Analyses,											
	and Acceptance Criteria											
14.3.7	Plant Systems -	456	14.03.07-48	2009/10/5	Y	N	N		-	DCD_14.03.07-48	-	2
	Inspections, Tests, Analyses,	456	14.03.07-49	2009/10/5	Y	N	N		-	DCD_14.03.07-49	-	2
	and Acceptance Criteria	508	14.03.07-50	2009/12/24	Y	N	N		-	DCD_14.03.07-50	1	3
14.3.8	Radiation Protection -											
	Inspections, Tests, Analyses,											
	and Acceptance Criteria											
14.3.9	Human Factors Engineering -	560	14.03.09-7	2010/4/23	Y	N	N		-	DCD_14.03.09-7	3	3
	Inspections, Tests, Analyses,	560	14.03.09-8	2010/4/23	Y	N	N		-	DCD_14.03.09-8	3	3
	and Acceptance Criteria											
14.3.10	Emergency Planning -											
	Inspections, Tests, Analyses,											
	and Acceptance Criteria											
14.3.11	Containment Systems -	488	14.03.11-40	12/25/09	Y	N	N					
	Inspections, Tests, Analyses,			2010/1/13	Y	N	N		-	DCD_14.3.4.11-40	1	3
	and Acceptance Criteria	488	14.03.11-41	12/25/09	N	N	N					
				2010/1/13	N	N	N		-	-	N/A	N/A
		488	14.03.11-42	12/25/09	Y	N	N					
				2010/1/13	Y	N	N		-	DCD_14.3.4.11-42	1	3
		550	14.03.11-43	2010/3/25	Y	N	N		-	DCD_14.3.4.11-43	3	3
14.3.12	Physical Security Hardware -	481	14.03.12-25	11/10/2009	N	N	N		-	-	N\A	N/A
	Inspections, Tests, Analyses,	481	14.03.12-26	11/10/2009	Y	N	N		-	DCD_14.03.12-26	0	3
	and Acceptance Criteria	481	14.03.12-27	11/10/2009	Y	N	N		-	DCD_14.03.12-27	0	3
		481	14.03.12-28	11/10/2009	N	N	N		-	-	N\A	N/A
		481	14.03.12-29	11/10/2009	Y	N	N		-	DCD_14.03.12-29	0	3
		481	14.03.12-30	11/10/2009	Y	N	N		-	DCD_14.03.12-30	0	3

Chapter:14

SRP Section		DCD RAI Response							Other Drivers	Change ID Number for DCD forthcoming Revision	DCD Tracking Report Revision	DCD Revision
No.	Title	RAI No.	Question No.	Response Date	Impact on DCD	Impact on COLA	Impact on PRA	Response Status				

Chapter:18

SRP Section		DCD RAI Response							Other Drivers	Change ID Number for DCD forthcoming Revision	DCD Tracking Report Revision	DCD Revision
No.	Title	RAI No.	Question No.	Response Date	Impact on DCD	Impact on COLA	Impact on PRA	Response Status				
18.1	HFE Program Management											
18.2	Operating Experience Review	529	18-66	2010/3/1	N	N	N		-	-	N/A	N/A
		529	18-67	2010/3/1	Y	N	N		-	DCD_18-67	3	3
		529	18-68	2010/3/1	N	N	N		-	-	N/A	N/A
18.3	Functional Requirements Analysis and Function Allocation											
18.4	Task Analysis											
18.5	Staffing and Qualifications											
18.6	Human Reliability Analysis											
18.7	Human-System Interface Design											
18.8	Procedure Development											
18.9	Training Program Development											
18.10	Human Factors Verification and Validation											
18.11	Design Implementation											
18.12	Human Performance Monitoring											
18.13	Minimum Inventory											

Chapter:19

SRP Section		DCD RAI Response							Other Drivers	Change ID Number for DCD forthcoming Revision	DCD Tracking Report Revision	DCD Revision
No.	Title	RAI No.	Question No.	Response Date	Impact on DCD	Impact on COLA	Impact on PRA	Response Status				
19	Probabilistic Risk Assessment	443	19-391	2009/10/1	N	N	N		-	-	N/A	N/A
	and Severe Accident Evaluation	443	19-392	2009/10/1	N	N	N		-	-	N/A	N/A
	for New Reactors	443	19-393	2009/10/1	Y	N	N		-	DCD_19-393	-	2
		443	19-394	2009/10/1	N	N	N		-	-	N/A	N/A
		443	19-395	2009/10/1	N	N	N		-	-	N/A	N/A
		443	19-396	2009/10/1	Y	N	N		-	DCD_19-396	0	3
		443	19-397	2009/10/1	Y	N	N		-	DCD_19-397	0	3
		454	19-398	2009/10/9	N	N	Y		-	-	N/A	N/A
		454	19-399	2009/10/9	N	N	Y		-	-	N/A	N/A
		454	19-400	2009/10/9	N	N	Y		-	-	N/A	N/A
		454	19-401	2009/10/9	Y	N	Y		-	DCD_19-401	-	2
		479	19-402	2009/11/25	Y	N	N		-	DCD_19-402	1	3
		479	19-403	2009/11/25	Y	N	N		-	DCD_19-403	1	3
		479	19-404	2009/11/25	Y	N	N		-	DCD_19-404	1	3
		479	19-405	2009/11/25	N	N	N		-	-	N/A	N/A
		479	19-406	2009/11/25	N	N	N		-	-	N/A	N/A
		480	19-*** (1)	2009/11/26	N	N	N		-	-	N/A	N/A
		480	19-*** (2)	2009/11/26	N	N	N		-	-	N/A	N/A
		480	19-*** (3)	2009/11/26	N	N	N		-	-	N/A	N/A
		480	19-*** (4)	2009/11/26	N	N	N		-	-	N/A	N/A
		480	19-*** (5)	2009/11/26	N	N	N		-	-	N/A	N/A
		480	19-*** (6)	2009/11/26	N	N	N		-	-	N/A	N/A
		528	19-407	2010/3/3	Y	N	N		-	DCD_19-407	2	3
		528	19-408	2010/3/3	Y	N	N		-	DCD_19-408	2	3
		528	19-409	2010/3/3	Y	N	N		-	DCD_19-409	2	3
		528	19-410	2010/3/3	Y	N	N		-	DCD_19-410	2	3
		528	19-411	2010/3/3	N	N	N		-	-	N/A	N/A
		528	19-412	2010/3/3	Y	N	N		-	DCD_19-412	3	3
		528	19-413	2010/3/3	Y	N	N		-	DCD_19-413	3	3
		528	19-414	2010/3/3	Y	N	N		-	DCD_19-414	2	3
		528	19-415	2010/3/3	Y	N	N		-	DCD_19-415	2	3
		528	19-416	2010/3/3	Y	N	N		-	DCD_19-416	2	3
		528	19-417	2010/3/3	Y	N	N		-	DCD_19-417	2	3
		528	19-418	2010/3/3	Y	N	N		-	DCD_19-418	2	3
		528	19-419	2010/3/3	Y	N	N		-	DCD_19-419	2	3
		528	19-420	2010/3/3	Y	N	N		-	DCD_19-420	2	3
		528	19-421	2010/3/3	Y	N	N		-	DCD_19-421	3	3
		528	19-422	2010/3/3	Y	N	N		-	DCD_19-422	2	3
		564	19-423	2010/4/28	Y	N	N		-	DCD_19-423	3	3
		564	19-424	2010/4/28	Y	N	N		-	DCD_19-424	3	3
		564	19-425	2010/4/28	Y	N	N		-	DCD_19-425	3	3
		564	19-426	2010/4/28	Y	Y	N		-	DCD_19-426	3	3
		564	19-427	2010/4/28	Y	N	N		-	DCD_19-427	3	3
		564	19-428	2010/4/28	Y	N	N		-	DCD_19-428	3	3
		566	19-429	2010/4/28	Y	N	N		-	DCD_19-429	3	3
19.1	Determining the Technical Adequacy											
	of Probabilistic Risk Assessment											
	Results for Risk-Informed Activities											
		-	-	-	-	-	-	-	COL 19.3(5) deleted	MAP-19-001	-	2
19.2	Review of Risk Information											
	Used to Support Permanent Plant -											
	Specific Changes											
	to the Licensing Basis:											
	General Guidance											

Chapter 1

US-APWR DCD Chapter 1 Rev. 2, Tracking Report Rev. 3 Change List

Page	Location (e.g., subsection with paragraph/ sentence/ item, table with row/column, or figure)	Description of Change
1.8-34	Table 1.8-2	Add COL 11.2(7) to address a coatings program. [RAI 523-4246, Question 11.02-29]
1.8-34	Table 1.8-2	Add COL 11.2(8) to address mobile/portable LWMS connections. [RAI 534-4256, Question 11.04-19]
1.8-36	Table 1.8-2	Correct statement of COL 11.4(4). [RAI 534-4256, Question 11.04-19]
1.8-36	Table 1.8-2	Add COL 11.4(9) to address a coatings program. [RAI 523-4246, Question 11.02-29]
1.8-37	Table 1.8-2	Add COL 11.4(10) to address a mobile and temporary solid radwaste processing and its interconnection to plant systems. [RAI 534-4256, Question 11.04-19]
1.8-38	Table 1.8-2	Add COL 12.1(8) to address operational procedures following the guidance of RG 4.21. [RAI 534-4256, Question 11.04-19]
1.8-41	Table 1.8-2	Add COL 13.4(2) to ensure the COL holder implements a program meeting the requirements of NUREG-0737 Item III.D.1.1 for the systems identified in TS 5.5.2. [RAI 526-4121, Question 09.03.02-13]

Table 1.8-2 Compilation of All Combined License Applicant Items for Chapters 1-19 (sheet 30~~30~~ of 44)

COL ITEM NO.	COL ITEM
COL 11.2(2)	*Site-specific information of the LWMS, e.g., radioactive release points, effluent temperature, shape of flow orifices, etc., is provided in the COLA.*
COL 11.2(3)	*The COL applicant is responsible for providing site-specific hydrogeological data (such as contaminant migration time), and analysis to demonstrate that the potential groundwater contamination resulting from radioactive release due to liquid containing tank failure is bounded by the analysis discussed in Subsection 11.2.3.2.*
COL 11.2(4)	*The COL applicant is to calculate doses to members of the public following the guidance of RG 1.109* (Ref 11.2-15) *and RG 1.113 using site-specific parameters, and compares the doses due to the liquid effluents with the numerical design objectives of Appendix I to 10 CFR 50* (Ref 11.2-10) *and compliance with requirements of 10 CFR 20.1302, 40 CFR 190.*
COL 11.2(5)	*The COL applicant is to perform a site-specific cost benefit analysis to demonstrate compliance with the regulatory requirements.*
COL 11.2(6)	*The COL applicant is to provide piping and instrumentation diagrams (P&IDs).*
COL 11.2(7)	*The COL Applicant is responsible for identifying the implementation milestones for the coatings program used in the LWMS. The coatings program addresses RG 1.54 Revision 1, recognizing that more recent standards may be used if referenced in DCD Section 11.2.*
COL 11.2(8)	*The COL applicant is to describe mobile/portable LWMS connections that are considered non-radioactive but later may become radioactive through contact or contamination with radioactive systems (i.e., a non-radioactive system becomes contaminated due to leakage, valving errors, or other operating conditions in the radioactive systems), and operational procedures of the mobile/portable LWMS connections. The COL applicant is to prepare a plan to develop and use operating procedures so that the guidance and information in Inspection and Enforcement (IE) Bulletin 80-10 (Ref. 11.4-24) is followed.*
COL 11.3(1)	*Deleted*

Table 1.8-2 Compilation of All Combined License Applicant Items for Chapters 1-19 (sheet 32~~32~~ of 44)

COL ITEM NO.	COL ITEM
COL 11.4(4)	*The COL applicant is to describe mobile/portable SWMS connections that are considered non-radioactive but later may become radioactive through contact or contamination with radioactive systems (i.e., a non-radioactive system becomes contaminated due to leakage, valving errors, or other operating conditions in the radioactive systems). ~~, and operational procedures of the mobile/portable SWMS connections~~The COL applicant is to prepare a plan to develop and use operating procedures so that the guidance and information in Inspection and Enforcement (IE) Bulletin 80-10 (Ref. 11.4-29) is followed.*
COL 11.4(5)	*The current design provides collection and packaging of potentially contaminated clothing for offsite shipment and/or disposal. Depending on site-specific requirements, the COL applicant can send the wastes to an offsite laundry facility processing and/or bring in a mobile compaction unit for volume reduction. The laundry services, including contracted service and/or a temporary mobile compaction subsystem are COL items.*
COL 11.4(6)	*The COL applicant is required to perform a site-specific cost benefit analysis to demonstrate compliance with the regulatory requirements.*
COL 11.4(7)	*The SWMS design does no include solid waste processing facility (e.g. de-watering system, compactor for reducing waste volume) but provides the flexibility for the site-specific utilities to add compaction equipment or to adopt contract services from specialized facilities. This is the responsibility of the COL applicant.*
COL 11.4(8)	*The COL applicant is to provide piping and instrumentation diagrams (P&IDs).*
COL 11.4(9)	*The COL Applicant is responsible for identifying the implementation milestones for the coatings program used in the SWMS. The coatings program addresses RG 1.54 Revision 1, recognizing that more recent standards may be used if referenced in DCD Section 11.4.*

Table 1.8-2 Compilation of All Combined License Applicant Items for Chapters 1-19 (sheet 33~~32~~ of 44)

COL ITEM NO.	COL ITEM
COL 11.4(10)	*The COL applicant is responsible for ensuring that mobile and temporary solid radwaste processing and its interconnection to plan systems conforms to regulatory requirements and guidance such as 10 CFR 50.34a (Ref. 11.4-11), 10 CFR 20.1406 (Ref.11.4-16) and RG 1.143 (Ref. 11.4-1).*
COL 11.5 (1)	*The COL applicant is responsible for the additional site-specific aspects of the process and effluent monitoring and sampling system beyond the standard design, in accordance with RGs 1.21, 1.33 and 4.15 (Ref. 11.5-12, 11.5-17, 11.5-14). Furthermore, the COL applicant is responsible for assuring the fulfillment of the guidelines issued in 10 CFR 50, Appendix I (Ref. 11.5-3) regarding the offsite doses released through gaseous and liquid effluent streams.*
COL 11.5(2)	*The COL applicant is to prepare an offsite dose calculation manual to provide specific administrative controls and liquid and gaseous effluent source terms to limit the releases to site-specific requirements containing a description of the methods and parameters that drive to arrive radiation instrumentation alarm setpoint. The COL applicant is to commit to follow the NEI generic template 07-09A (Ref. 11.5-30) as an alternative to providing the offsite dose calculation manual at the time of application.*
COL 11.5(3)	*The COL applicant is to develop a radiological and environmental monitoring program taking into consideration local land use and census data in identifying all potential radiation exposure pathways. The program shall take into account associated radioactive materials present in liquid and gaseous effluents and direct external radiation from SSCs. The COL applicant is to follow the guidance outlined in NUREG-1301(Ref. 11.5-21), and NUREG-0133 (Ref. 11.5-18) when developing the radiological effluent monitoring program. The COL applicant is to commit to follow the NEI generic template 07-09A (Ref. 11.5-30) as an alternative to providing the radiological effluent monitoring program at the time of application.*
COL 11.5(4)	*The COL applicant is to develop procedures which are of inspection, decontamination, and replacement related to radiation monitoring instruments.*
COL 11.5(5)	*The COL applicant is to provide analytical procedures and sensitivity for selected radioanalytical methods and type of sampling media for site-specific matter.*

Table 1.8-2 Compilation of All Combined License Applicant Items for Chapters 1-19 (sheet 34~~32~~ of 44)

COL ITEM NO.	COL ITEM
COL 11.5(6)	*The COL applicant is to perform a site-specific cost benefit analysis to demonstrate compliance with the regulatory requirements.*
COL 12.1(1)	*The COL Applicant is to demonstrate that the policy considerations regarding plant operations are compliance with RG 1.8, 8.8 and 8.10 (Subsection 12.1.1.3).*
COL 12.1(2)	*Deleted*
COL 12.1(3)	*The COL Applicant is to describe how the plant follows the guidance of RG 8.2, 8.4, 8.6, 8.7, 8.9, 8.13, 8.15, 8.25, 8.27, 8.28, 8.29, 8.34, 8.35, 8.36 and 8.38.*
COL 12.1(4)	*Deleted*
COL 12.1(5)	*The COL Applicant is to provide the operational radiation protection program for ensuring that occupational radiation exposures are ALARA.*
COL 12.1(6)	*The COL applicant is to performe periodic review of operational practices to ensere configuration management, personnel training and qualification update, and procedure adherence.*
COL 12.1(7)	*The COL applicant is to track implementation of requirements for record retention according to 10 CFR50.75(g) and 10 CFR70.25(g) as applicable.*
COL 12.1(8)	*The COL applicant is responsible for the development of the operational procedures, following the guidance of RG 4.21 (Reference 12.1-27), for the operation and handling of all structure, system, and components (SSC) which could be potential sources of contamination within the plant. These procedures will be developed according to the objective of limiting leakage and the spread of contamination within the plant.*
COL 12.2(1)	*The COL Applicant is to list any additional contained radiation sources that are not identified in Subsection 12.2.1, including radiation sources used for instrument calibration or radiography.*
COL 12.2(2)	*The COL Applicant is to address the radiation protection aspects associated with additional storage space for radwaste and/or additional radwaste facilities for dry active waste.*

Table 1.8-2 Compilation of All Combined License Applicant Items for Chapters 1-19 (sheet 37~~37~~ of 44)

COL ITEM NO.	COL ITEM
COL 13.2(5)	*The COL Applicant is to determine the extent to which portions of applicable NRC guidance is used in the facility training program or the justification of exceptions.*
COL 13.3(1)	*The COL Applicant is to develop interfaces of design features with site specific designs and site parameters.*
COL 13.3(2)	*The COL Applicant is to develop a comprehensive emergency plan as a physically separate document.*
COL 13.3(3)	*The COL Applicant is to develop an emergency classification and action level scheme.*
COL 13.3(4)	*The COL Applicant is to develop the security-related aspects of emergency planning.*
COL 13.3(5)	*The COL Applicant is to develop a multi-unit site interface plan depending on the location of the new reactor on, or near, an operating reactor site with an existing emergency plan.*
COL 13.3(6)	*The COL Applicant is to develop an emergency planning inspections, tests, analyses, and acceptance criteria.*
COL 13.3(7)	*The COL Applicant is to develop the description of the operation support center.*
COL 13.4(1)	*The COL Applicant is to develop a description and schedule for the implementation of operational programs. The COL Applicant is to "fully describe" the operational programs as defined in SECY-05-0197 (Ref. 13.4-1) and provide commitments for the implementation of operational programs required by regulation. In some instances, programs may be implemented in phases. The COL Applicant is to include the phased implementation milestones in their submittal.*
COL 13.4(2)	*The COL Applicant is to develop a leakage monitoring and prevention program for the systems specified in TS 5.5.2. The leakage monitoring and prevention program will include the appropriate methods and acceptance criteria as defined in NUREG-0737 Item III.D.1.1 (Ref 13.4-2).*

Chapter 2

Page	Location (e.g., subsection with paragraph/ sentence/ item, table with row/column, or figure)	Description of Change
2.0-2	Table 2.0-1 Sheet 1 4th Row 1st Column	Change: "Extreme winter precipitation roof load(12) (100-year snowpack maximum snow weight including contributing portion of either extreme frozen winter precipitation event or extreme liquid winter precipitation event)" to "Extreme winter precipitation roof load(12)" Reason: Removed parenthetical information since footnote 12 adequately describes the basis for extreme winter precipitation roof load. [RAI 547-4426 Question 02.03.01-17]
2.0-2	Table 2.0-1 Sheet 1 5th Row 1st Column	Change: "48-hr probable maximum winter precipitation(13) (PMWP)" to "48-hr probable maximum winter precipitation (PMWP)" Reason: Deleted footnote [RAI 547-4426 Question 02.03.01-18]
2.0-3	Table 2.0-1 Sheet 2 Rows 7-10	Change the values for χ/Q for the 4-30 Days. Reason: The 96-720 hour χ/Q value of the DCD should be representative of a reasonable number of sites and has been changed to bound the site parameter of North Anna, Clinton, Grand Gulf, and Vogtle. [RAI 562-4427 Question 02.03.04-9]
2.0-4	Table 2.0-1 Sheet 3 1st and 3rd through 5th Rows	Change the values for χ/Q for the 4-30 Days. Reason: The 96-720 hour χ/Q value of the DCD should be representative of a reasonable number of sites and has been changed to bound the site parameter of North Anna, Clinton, Grand Gulf, and Vogtle. [RAI 562-4427 Question 02.03.04-9]
2.0-4	Table 2.0-1 Sheet 3 Last Row 1st Column	Change: "Ground-level containment releases to Class 1E electrical room HVAC intake(4) " to "Ground-level containment releases(4) " Reason: Correct the expression of ground-level containment releases for MCR inleakage. [RAI 562-4427 Question 02.03.04-6]
2.0-5	Table 2.0-1 Sheet 4 1st through 3rd Rows and Last Row	Change the values for χ/Q for the 4-30 Days. Reason: The 96-720 hour χ/Q value of the DCD should be representative of a reasonable number of sites and has been changed to bound the site parameter of North Anna, Clinton, Grand Gulf, and Vogtle. [RAI 562-4427 Question 02.03.04-9]

Page	Location (e.g., subsection with paragraph/ sentence/ item, table with row/column, or figure)	Description of Change
2.0-6	Table 2.0-1 Sheet 5 All Rows	Change the values for χ/Q for the 4-30 Days. Reason: The 96-720 hour χ/Q value of the DCD should be representative of a reasonable number of sites and has been changed to bound the site parameter of North Anna, Clinton, Grand Gulf, and Vogtle. [RAI 562-4427 Question 02.03.04-9]
2.0-7	Table 2.0-1 Sheet 6 All Rows	Change the values for χ/Q for the 4-30 Days. Reason: The 96-720 hour χ/Q value of the DCD should be representative of a reasonable number of sites and has been changed to bound the site parameter of North Anna, Clinton, Grand Gulf, and Vogtle. [RAI 562-4427 Question 02.03.04-9]
2.0-9	Table 2.0-1 Sheet 8 Note 13	Change: "The 48-hour PMWP is based on interpolation of 24-hour PMP and 72-hour PMP data for the month of March in HMR-53 (Reference: Hydrometeorological Report No. 53, Seasonal Variation of 10-Square-Mile Probable Maximum Precipitation Estimates, United States East of the 105th Meridian, Figures 27 and 37)" to "Deleted." Reason: Clarified information on PMWP by deleting footnote and moving information to Section 2.3. [RAI 547-4426 Question 02.03.01-18]
2.3-1	Subsection 2.3.1 1st Paragraph 2nd Sentence	Add new 2nd Sentence: "The 48-hour PMWP in Table 2.0-1 is selected as a key site parameter, determined by interpolating the 24-hour PMP and 72-hour PMP data for the month of March in HMR-53 (Reference 2.3-11)." Reason: Clarified information on PMWP by deleting footnote and moving information to Section 2.3. [RAI 547-4426 Question 02.03.01-18]
2.3-2	Subsection 2.3.4 Last Paragraph	Change: "The necessary data to calculate χ/Q values of MCR and TSC by using ARCON96 are shown in Table 2.3-1 to 2.3-4." to "The necessary data to calculate χ/Q values of MCR and TSC by using ARCON96 are shown in Table 2.3.4-1 to 2.3.4-7." Reason: Editorial Correction [RAI 562-4427 Question 02.03.04-9]
2.3-4	Subsection 2.3.7 Reference 2.3-11	Add new reference: "2.3-11 Hydrometeorological Report No. 53, Seasonal Variation of 10-Square-Mile

Page	Location (e.g., subsection with paragraph/ sentence/ item, table with row/column, or figure)	Description of Change
		Probable Maximum Precipitation Estimates, United States East of the 105th Meridian, Figures 27 and 37" Reason: New reference used [RAI 547-4426 Question 02.03.01-18]
2.3-6	Table 2.3-3 1st Row 2nd and 3rd Columns	Change in the 1st Column: "The height to the lower limit(1) (m)" to "The height to the upper limit(1) (m)" Change in the 3rd Column: "The height to the upper limit(1) (m)" to "The height to the lower limit(1) (m)" Reason: Editorial correction [RAI 562-4427 Question 02.03.04-8]
2.3-7	Table 2.3.4-1 Sheet 1 Last Row	Change the two χ/Q values for the 96-720 hr. Reason: The 96-720 hour χ/Q value of the DCD should be representative of a reasonable number of sites and has been changed to bound the site parameter of North Anna, Clinton, Grand Gulf, and Vogtle. [RAI 562-4427 Question 02.03.04-9]
2.3-8	Table 2.3.4-1 Sheet 2 Row for "Vertical Distance" Last Column	Change: "-2.7" to "-3" Reason: Editorial correction (rounding consistency) [RAI 562-4427 Question 02.03.04-9]
2.3-8	Table 2.3.4-1 Sheet 2 Last Row	Change the two χ/Q values for the 96-720 hr. Reason: The 96-720 hour χ/Q value of the DCD should be representative of a reasonable number of sites and has been changed to bound the site parameter of North Anna, Clinton, Grand Gulf, and Vogtle. [RAI 562-4427 Question 02.03.04-9]
2.3-9	Table 2.3.4-1 Sheet 3 Last Row	Change the χ/Q value for the 96-720 hr. Reason: The 96-720 hour χ/Q value of the DCD should be representative of a reasonable number of sites and has been changed to bound the site parameter of North Anna, Clinton, Grand Gulf, and Vogtle. [RAI 562-4427 Question 02.03.04-9]
2.3-10 to 2.3-14	Table 2.3.4-1 Sheets 4-8 Last Row	Change the χ/Q value for the 96-720 hr. Reason: The 96-720 hour χ/Q value of the DCD should be representative of a reasonable number of sites and has been changed to bound the site parameter of North

Page	Location (e.g., subsection with paragraph/ sentence/ item, table with row/column, or figure)	Description of Change
		Anna, Clinton, Grand Gulf, and Vogtle. [RAI 562-4427 Question 02.03.04-9]
2.3-15 to 2.3-16	Table 2.3.4-1 Sheets 9-10 Last Row	Change the two χ/Q values for the 96-720 hr. Reason: The 96-720 hour χ/Q value of the DCD should be representative of a reasonable number of sites and has been changed to bound the site parameter of North Anna, Clinton, Grand Gulf, and Vogtle. [RAI 562-4427 Question 02.03.04-9]
2.3-17	Table 2.3.4-1 Sheet 11 Horizontal distance Source to Receptor 3rd and 7th Columns	Change: “63” to “62” Reason: Editorial Correction [RAI 562-4427 Question 02.03.04-9]
2.3-17 to 2.3-18	Table 2.3.4-1 Sheets 11-12 Last Row	Change the two χ/Q values for the 96-720 hr. Reason: The 96-720 hour χ/Q value of the DCD should be representative of a reasonable number of sites and has been changed to bound the site parameter of North Anna, Clinton, Grand Gulf, and Vogtle. [RAI 562-4427 Question 02.03.04-9]
2.9-19 to 2.3-24	Table 2.3.4-2 Sheets 1-6 Last row	Change the χ/Q value for the 96-720 hr. Reason: The 96-720 hour χ/Q value of the DCD should be representative of a reasonable number of sites and has been changed to bound the site parameter of North Anna, Clinton, Grand Gulf, and Vogtle. [RAI 562-4427 Question 02.03.04-9]
2.3-25 to 2.3-26	Table 2.3.4-2 Sheets 7 and 8 Last row	Change the two χ/Q values for the 96-720 hr. Reason: The 96-720 hour χ/Q value of the DCD should be representative of a reasonable number of sites and has been changed to bound the site parameter of North Anna, Clinton, Grand Gulf, and Vogtle. [RAI 562-4427 Question 02.03.04-9]
2.3-27 to 2.3-28	Table 2.3.4-3 Sheets 1 and 2 Last row	Change the two χ/Q values for the 96-720 hr. Reason: The 96-720 hour χ/Q value of the DCD should be representative of a reasonable number of sites and has been changed to bound the site parameter of North Anna, Clinton, Grand Gulf, and Vogtle. [RAI 562-4427 Question 02.03.04-9]

Page	Location (e.g., subsection with paragraph/ sentence/ item, table with row/column, or figure)	Description of Change
2.3-29 to 2.3-34	Table 2.3.4-3 Sheets 3-8 Last row	Change the χ/Q value for the 96-720 hr. Reason: The 96-720 hour χ/Q value of the DCD should be representative of a reasonable number of sites and has been changed to bound the site parameter of North Anna, Clinton, Grand Gulf, and Vogtle. [RAI 562-4427 Question 02.03.04-9]
2.3-35	Table 2.3.4-3 Sheet 9	Table Title: Change: "…Accident Analysis in the (Sheet 9 of 11)" to "…Accident Analysis (Sheet 9 of 11)" 8th Row: Change 4th, 5th, 8th and 9th Columns from "0" to "7.98" 9th Row: Change 4th, 5th, 8th and 9th Columns from "0" to "5.03" Last Row: Change the four χ/Q values for the 96-720 hr. Reason: Editorial correction in the table title. The lateral and vertical diffusion coefficients were corrected. The 96-720 hour χ/Q value of the DCD changed to bound the site parameter of North Anna, Clinton, Grand Gulf, and Vogtle. [RAI 562-4427 Question 02.03.04-9]
2.3-36 to 2.3-37	Table 2.3.4-3 Sheets 10 and 11 Last row	Change the two χ/Q values for the 96-720 hr. Reason: The 96-720 hour χ/Q value of the DCD should be representative of a reasonable number of sites and has been changed to bound the site parameter of North Anna, Clinton, Grand Gulf, and Vogtle. [RAI 562-4427 Question 02.03.04-9]
2.3-38 to 2.3-53	Table 2.3.4-4 to Table 2.3.4-7 All Sheets Last Row	Change the χ/Q value(s) for the 96-720 hr. Reason: The 96-720 hour χ/Q value of the DCD should be representative of a reasonable number of sites and has been changed to bound the site parameter of North Anna, Clinton, Grand Gulf, and Vogtle. [RAI 562-4427 Question 02.03.04-9]

Table 2.0-1 Key Site Parameters
(Sheet 1 of 8)

Meteorology	
Parameter Description	**Parameter Value**
Normal winter precipitation roof load (11)	50 lb/ft^2
Extreme winter precipitation roof load(12) ~~(100 year snowpack maximum snow weight including contributing portion of either extreme frozen winter precipitation event or extreme liquid winter precipitation event)~~	75 lb/ft^2
48-hr probable maximum winter precipitation~~(13)~~ (PMWP)	36 in.
Tornado maximum wind speed	230 mph
	184 mph maximum rotational
	46 mph maximum translational
Radius of maximum rotational speed	150 ft
Tornado maximum pressure drop	1.2 psi
Rate of Pressure drop	0.5 psi/s
Tornado-generated missile spectrum and associated velocities	15 ft long schedule 40 steel pipe moving horizontally at 135 ft/s(1)
	4,000 lb automobile moving horizontally at 135 ft/s(1)
	1 in diameter steel sphere moving horizontally at 26 ft/s(1)
Extreme wind speed (other than in tornado)	155 mph for 3-second gusts at 33 ft above ground level based on 100-year return period, with importance factor of 1.15 for seismic category I/II structures
Ambient design air temperature (1% annual exceedance maximum)	100°F dry bulb, 77°F coincident wet bulb, 81°F non-coincident wet bulb
Ambient design air temperature (0% annual exceedance maximum)	115°F dry bulb, 80°F coincident wet bulb, 86°F non-coincident wet bulb, historical limit excluding peaks <2 hr
Ambient design air temperature (1% annual exceedance minimum)	-10°F dry bulb
Ambient design air temperature (0% annual exceedance minimum)	-40°F dry bulb, historical limit excluding peaks <2 hr
Atmospheric dispersion factors (χ/Q values) for onsite locations:	
Exclusion area boundary (EAB) 0-2 hrs	5.0×10^{-4} s/m^3
EAB annual average	1.6×10^{-5} s/m^3

DCD_02.03.04-9

Table 2.0-1 Key Site Parameters
(Sheet 2 of 8)

Atmospheric dispersion factors (χ/Q values) for offsite locations:	
Low-population zone (LPZ) boundary	
0-8 hrs	2.1×10^{-4} s/m^3
8-24 hrs	1.3×10^{-4} s/m^3
1-4 days	6.9×10^{-5} s/m^3
4-30 days	2.8×10^{-5} s/m^3
Food production area	
annual average	5.0×10^{-6} s/m^3
Deposition factor (D/Q value) for onsite and offsite locations:	
EAB	
annual average	4.0×10^{-8} 1/m^2
Atmospheric dispersion factors (χ/Q values) for main control room (MCR) heating, ventilation, and air conditioning (HVAC) intake for specified release points(2):	
Plant vent (5)	
0-8 hrs	1.1×10^{-3} s/m^3
8-24 hrs	6.6×10^{-4} s/m^3
1-4 days	4.2×10^{-4} s/m^3
4-30 days	~~1.9×10^{-4} s/m^3~~ 2.8×10^{-4} s/m^3
Ground-level containment releases(4)	
0-8 hrs	2.2×10^{-3} s/m^3
8-24 hrs	1.3×10^{-3} s/m^3
1-4 days	8.3×10^{-4} s/m^3
4-30 days	~~3.6×10^{-4} s/m^3~~ 5.5×10^{-4} s/m^3
Main steam relief valve and safety valve releases(6)	
0-8 hrs	5.3×10^{-3} s/m^3
8-24 hrs	3.1×10^{-3} s/m^3
1-4 days	2.0×10^{-3} s/m^3
4-30 days	~~8.7×10^{-4} s/m^3~~ 1.3×10^{-3} s/m^3
Steam line break releases(8)	
0-8 hrs	1.9×10^{-2} s/m^3
8-24 hrs	1.1×10^{-2} s/m^3
1-4 days	7.1×10^{-3} s/m^3
4-30 days	~~3.1×10^{-3} s/m^3~~ 4.7×10^{-3} s/m^3

DCD_02.03.04-6
DCD_02.03.04-9

Table 2.0-1 Key Site Parameters
(Sheet 3 of 8)

Fuel handling area releases [7]	
0-8 hrs	1.1×10^{-3} s/m^3
8-24 hrs	6.4×10^{-4} s/m^3
1-4 days	4.1×10^{-4} s/m^3
4-30 days	~~1.8×10^{-4} s/m^3~~ 2.7×10^{-4} s/m^3
Atmospheric dispersion factors (χ/Q values) for MCR inleak for specified release points[3]*:*	
Plant vent[9]	
0-8 hrs	1.3×10^{-3} s/m^3
8-24 hrs	7.8×10^{-4} s/m^3
1-4 days	4.9×10^{-4} s/m^3
4-30 days	~~2.2×10^{-4} s/m^3~~ 3.3×10^{-4} s/m^3
Plant vent[10]	
0-8 hrs	1.4×10^{-3} s/m^3
8-24 hrs	8.0×10^{-4} s/m^3
1-4 days	5.1×10^{-4} s/m^3
4-30 days	~~2.2×10^{-4} s/m^3~~ 3.3×10^{-4} s/m^3
Ground-level containment releases ~~to Class 1E electrical room HVAC intake~~ [4]	
0-8 hrs	2.4×10^{-3} s/m^3
8-24 hrs	1.4×10^{-3} s/m^3
1-4 days	9.1×10^{-4} s/m^3
4-30 days	~~4.0×10^{-4} s/m^3~~ 6.0×10^{-4} s/m^3

Table 2.0-1 Key Site Parameters
(Sheet 4 of 8)

Main steam relief valve and safety valve releases [6]	
0-8 hrs	5.3×10^{-3} s/m^3
8-24 hrs	3.1×10^{-3} s/m^3
1-4 days	2.0×10^{-3} s/m^3
4-30 days	~~8.7×10^{-4} s/m^3~~ 1.3×10^{-3} s/m^3
Steam line break releases [8]	
0-8 hrs	1.9×10^{-2} s/m^3
8-24 hrs	1.1×10^{-2} s/m^3
1-4 days	7.1×10^{-3} s/m^3
4-30 days	~~3.1×10^{-3} s/m^3~~ 4.7×10^{-3} s/m^3
Fuel handling area releases [7]	
0-8 hrs	1.1×10^{-3} s/m^3
8-24 hrs	6.7×10^{-4} s/m^3
1-4 days	4.3×10^{-4} s/m^3
4-30 days	~~1.9×10^{-4} s/m^3~~ 2.8×10^{-4} s/m^3
Atmospheric dispersion factors (χ/Q values) for Technical Support Center (TSC) HVAC intake for specified release points[2]:	
Plant vent [5]	
0-8 hrs	1.4×10^{-3} s/m^3
8-24 hrs	8.0×10^{-4} s/m^3
1-4 days	5.1×10^{-4} s/m^3
4-30 days	~~2.2×10^{-4} s/m^3~~ 3.3×10^{-4} s/m^3

Table 2.0-1 Key Site Parameters
(Sheet 5 of 8)

Ground-level containment releases[4]	
0-8 hrs	1.9×10^{-3} s/m^3
8-24 hrs	1.1×10^{-3} s/m^3
1-4 days	7.2×10^{-4} s/m^3
4-30 days	~~3.2×10^{-4} s/m^3~~ 4.8×10^{-4} s/m^3
Main steam relief valve and safety valve releases[6]	
0-8 hrs	1.7×10^{-3} s/m^3
8-24 hrs	9.9×10^{-4} s/m^3
1-4 days	6.3×10^{-4} s/m^3
4-30 days	~~2.8×10^{-4} s/m^3~~ 4.2×10^{-4} s/m^3
Steam line break releases [8]	
0-8 hrs	1.4×10^{-3} s/m^3
8-24 hrs	8.4×10^{-4} s/m^3
1-4 days	5.3×10^{-4} s/m^3
4-30 days	~~2.3×10^{-4} s/m^3~~ 3.5×10^{-4} s/m^3
Fuel handling area releases [7]	
0-8 hrs	6.7×10^{-4} s/m^3
8-24 hrs	3.9×10^{-4} s/m^3
1-4 days	2.5×10^{-4} s/m^3
4-30 days	~~1.1×10^{-4} s/m^3~~ 1.7×10^{-4} s/m^3

Table 2.0-1 Key Site Parameters
(Sheet 6 of 8)

Atmospheric dispersion factors (χ/Q values) for TSC inleak for specified release points[3]:	
Plant vent [5]	
0-8 hrs	1.4×10^{-3} s/m^3
8-24 hrs	8.0×10^{-4} s/m^3
1-4 days	5.1×10^{-4} s/m^3
4-30 days	~~2.2×10^{-4} s/m^3~~ 3.3×10^{-4} s/m^3
Ground-level containment releases [4]	
0-8 hrs	1.9×10^{-3} s/m^3
8-24 hrs	1.1×10^{-3} s/m^3
1-4 days	7.2×10^{-4} s/m^3
4-30 days	~~3.2×10^{-4} s/m^3~~ 4.8×10^{-4} s/m^3
Main steam relief valve and safety valve releases [6]	
0-8 hrs	1.7×10^{-3} s/m^3
8-24 hrs	9.9×10^{-4} s/m^3
1-4 days	6.3×10^{-4} s/m^3
4-30 days	~~2.8×10^{-4} s/m^3~~ 4.2×10^{-4} s/m^3
Steam line break releases [8]	
0-8 hrs	1.4×10^{-3} s/m^3
8-24 hrs	8.4×10^{-4} s/m^3
1-4 days	5.3×10^{-4} s/m^3
4-30 days	~~2.3×10^{-4} s/m^3~~ 3.5×10^{-4} s/m^3
Fuel handling area releases [7]	
0-8 hrs	6.7×10^{-4} s/m^3
8-24 hrs	3.9×10^{-4} s/m^3
1-4 days	2.5×10^{-4} s/m^3
4-30 days	~~1.1×10^{-4} s/m^3~~ 1.7×10^{-4} s/m^3

Table 2.0-1 Key Site Parameters (Sheet 8 of 8)

Total settlement of R/B complex foundation(14)	6.0 in.
Differential settlement across R/B complex foundation(14)	2.0 in.
Maximum differential settlement between buildings(14)	0.5 in.
Maximum tilt of R/B complex foundation generated during operational life of the plant(14)	1/2000

NOTES:

1. The specified missiles are assumed to have a vertical speed component equal to 2/3 of the horizontal speed.
2. These dispersion factors are chosen as the maximum values at all intake points.
3. These dispersion factors are chosen as the maximum values at all inleak points.
4. These dispersion factors are used for a loss-of-coolant accident (LOCA) and a rod ejection accident.
5. These dispersion factors are used for a LOCA, a rod ejection accident, a failure of small lines carrying primary coolant outside containment and a fuel-handling accident inside the containment.
6. These dispersion factors are used for a steam generator tube rupture, a steam system piping failure, a reactor coolant pump rotor seizure and a rod ejection accident.
7. These dispersion factors are used for a fuel handling accident occurring in the fuel storage and handling area.
8. These dispersion factors are used for a steam system piping failure.
9. These dispersion factors are used for a LOCA.
10. These dispersion factors are used for a rod ejection accident, a failure of small lines carrying primary coolant outside containment and a fuel-handling accident inside the containment.
11. Normal winter precipitation roof load is determined by converting ground snow load p_g in accordance with ASCE 7-05. The ground snow load p_g is based on the highest ground-level weight of:
    - the 100-year return period snowpack,
    - the historical maximum snowpack,
    - the 100-year return period snowfall event, or
    - the historical maximum snowfall event in the site region.
12. The extreme winter precipitation roof load is based on the sum of the normal ground level winter precipitation plus the highest weight at ground level resulting from either the extreme frozen winter precipitation event or the extreme liquid winter precipitation event. The extreme frozen winter precipitation event is assumed to accumulate on the roof on top of the antecedent normal winter precipitation event. The extreme liquid winter precipitation event may not accumulate on the roof, depending on the geometry of the roof and the type of drainage provided. The extreme winter precipitation roof load is included as live load in extreme loading combinations using the applicable load factor indicated in DCD Section 3.8.
13. Deleted. ~~The 48-hour PMWP is based on interpolation of 24-hour PMP and 72-hour PMP data for the month of March in HMR 53 (Reference: Hydrometeorological Report No. 53, Seasonal Variation of 10-Square-Mile Probable Maximum Precipitation Estimates, United States East of the 105th Meridian, Figures 27 and 37)~~
14. Acceptable parameters for settlement without further evaluation.

2.3 Meteorology

The US-APWR is designed for meteorological information as specified in Table 2.0-1. The COL Applicant, whether the plant is to be sited inside or outside the continental US, is to provide site-specific pre-operational and operational programs for meteorological measurements, and is to verify the site-specific regional climatology and local meteorology are bounded by the site parameters for the standard US-APWR design or demonstrate by some other means that the proposed facility and associated site-specific characteristics are acceptable at the proposed site.

2.3.1 Regional Climatology

Site-specific information is provided for regional climatology, including general climate conditions and frequency of severe weather phenomena as discussed in SRP 2.3.1 (Reference 2.3-6). The 48-hour PMWP in Table 2.0-1 is selected as a key site parameter, determined by interpolating the 24-hour PMP and 72-hour PMP data for the month of March in HMR-53 (Reference 2.3-11). Refer to Subsection 3.3.2.1 for a complete summary of design basis tornado parameters, including maximum wind speed, maximum rotational speed, maximum translational speed, radius of maximum rotational wind from center of tornado, atmospheric drop, and rate of pressure change. The extreme wind speed as stated in Table 2.0-1 corresponds to the criteria described in Subsection 3.3.1.1. Ultimate heat sink (UHS) meteorological conditions are dependent on the site-specific climatology and selection of UHS type, as discussed in Subsection 9.2.5. Annual exceedance values of zero and one percent are based on the EPRI Advanced Light Water Reactor Utility Requirements Document (Reference 2.3-8) and conservative estimates of historical high and low values for potential US-APWR sites. These values are considered to bound approximately 75% to 80% of the continental US (excluding Alaska).

2.3.2 Local Meteorology

Site-specific information on local meteorology is based on long-term data from nearby reasonably representative locations and shorter-term onsite data as discussed in SRP 2.3.2 (Reference 2.3-7).

2.3.3 Onsite Meteorological Measurements Program

The site-specific pre-operational and operational programs for meteorological measurements are to be provided, which may include offsite satellite facilities. RG 1.23 (Reference 2.3-1) contains guidance on acceptable onsite meteorological programs, and any deviations from RG 1.23 guidance are to be identified and justified on a site-specific basis.

Additional sources of meteorological data is to be obtained from National Weather Service stations and other meteorological programs such as other nuclear facilities, university and private meteorological programs. These sources may be used in the description of airflow trajectories from the site to a distance of 50 miles, particularly measurements made, locations and elevations of measurements, exposure of instruments, descriptions of instruments used, and instrument performance specifications.

2.3.4 Short-Term Atmospheric Dispersion Estimates for Accident Releases

For appropriate time periods up to 30 days after an accident, conservative estimates are provided of atmospheric dispersion factors (χ/Q values) at the site's EAB, at the outer boundary of the LPZ, and at the MCR for postulated accidental radioactive airborne releases.

The short-term χ/Q values are site-specific parameters. The χ/Q values listed in Table 2.0-1 are bounding factors for a typical US-APWR sited in most areas of the US and can be used to calculate radiological consequences of design basis accidents. There is no site-specific meteorological data in the stage of the DCD. The atmospheric dispersion factors (χ/Q values) are determined as follows.

The US-APWR χ/Q value of EAB should be determined as the representative of the US plants. Therefore, the US-APWR χ/Q value of EAB is selected to envelop most values at the corresponding EAB distance (0.5 miles) of the many existing plants. This value is reasonable in comparison with the existing plants values with different EAB distances.

The χ/Q values of LPZ are also determined by using the same method as EAB at every time interval. However, the LPZ distance of US-APWR can not be specified in the stage of the DCD. Therefore, the US-APWR χ/Q values of LPZ are determined to envelop most χ/Q values of many existing plants with LPZ distance of more than 1 mile.

The 0-8 hrs χ/Q values of MCR and TSC are calculated by some formula based on both the diffusion equations used in ARCON96 (Reference 2.3-10) and the meteorological condition referred to RG 1.194 (Reference 2.3-9) (e.g. F stability and wind speeds of 1.0 m/s), not directly by ARCON96 itself. In this calculation formula, a multiplier is introduced to envelop the most χ/Q values of MCR and TSC of many existing plants.

By using the χ/Q values of MCR and TSC at various source-receptor distances of many existing plants, it is ensured that the above calculation formula envelops the most χ/Q values of the existing plants at any source-receptor distance, and then the US-APWR χ/Q value of MCR and TSC is determined by this calculation formula.

The other time interval χ/Q values (8-24 hrs, 24-96 hrs, 96-720 hrs) of MCR and TSC are calculated by using both the above formula of 0-8 hrs χ/Q values and the time interval factors described in RG 1.194 regulatory position 4.4. These calculated χ/Q values also envelop most existing plants values.

As a result, the US-APWR χ/Q values of EAB, LPZ, MCR and TSC in DCD Tier 2 Table 2.0-1 are representative of a reasonable number of the existing plants values. The COL Applicant is to provide conservative factors as described in SRP 2.3.4 (Reference 2.3-2). If a selected site will cause excess to the bounding χ/Q values, then the COL Applicant is to demonstrate how the dose reference values in 10 CFR 52.79(a)(1)(vi) (Reference 2.3-3) and the control room dose limits in 10 CFR 50, Appendix A, General Design Criteria 19 (Reference 2.3-4) are met using site-specific χ/Q values.

The necessary data to calculate χ/Q values of MCR and TSC by using ARCON96 are shown in Table 2.3.4-1 to 2.3.4-7~~-4~~.

2.3.7 References

2.3-1 Meteorological Monitoring Programs for Nuclear Power Plants. Regulatory Guide 1.23, Rev.1, U.S. Nuclear Regulatory Commission, Washington, DC, March 2007.

2.3-2 Short-Term Atmospheric Dispersion Estimates for Accident Releases, Standard Review Plan for the Review of Safety Analysis Reports for Nuclear Power Plants. NUREG-0800, SRP 2.3.4, Rev.3, U.S. Nuclear Regulatory Commission, Washington, DC, March 2007.

2.3-3 Contents of Applications: Technical Information in the Final Safety Analysis Report, Title 10, Code of Federal Regulations, Part 52.79, U.S. Nuclear Regulatory Commission, Washington, DC.

2.3-4 Criterion 19 - Control Room, General Design Criteria for Nuclear Power Plants, Energy. Title 10, Code of Federal Regulations Part 50, Appendix A, U.S. Nuclear Regulatory Commission, Washington, DC.

2.3-5 Long-Term Atmospheric Dispersion Estimates for Accident Releases, Standard Review Plan for the Review of Safety Analysis Reports for Nuclear Power Plants. NUREG-0800, SRP 2.3.5, Rev.3, U.S. Nuclear Regulatory Commission, Washington, DC, March 2007.

2.3-6 Regional Meteorology. NUREG-0800, SRP 2.3.1, Rev. 3, U.S. Nuclear Regulatory Commission, Washington, DC, March 2007.

2.3-7 Local Meteorology. NUREG-0800, SRP 2.3.2, Rev. 3, U.S. Nuclear Regulatory Commission, Washington, DC, March 2007.

2.3-8 Advanced Light Water Reactor Utility Requirements Document. Rev. 8, Electric Power Research Institute, Palo Alto, CA, March 1999.

2.3-9 Atmospheric Relative Concentrations for Control Room Radiological Habitability Assessments at Nuclear Power Plants, Regulatory Guide 1.194, Rev.0, US Nuclear Regulatory Commission, Washington, DC, June, 2003.

2.3-10 Atmospheric Relative Concentrations in Building Wakes, NUREG/CR-6331, PNNL-10521, Rev. 1. U.S. Nuclear Regulatory Commission, Washington, DC. May 1997.

2.3-11 Hydrometeorological Report No. 53, Seasonal Variation of 10-Square-Mile Probable Maximum Precipitation Estimates, United States East of the 105th Meridian, Figures 27 and 37

DCD_02.03.04-8

Table 2.3-3 Receptor Heights

Receptors	The height to the ~~lower~~ upper limit[1](m)	The height to the ~~upper~~ lower limit[1](m)
Main Control Room HVAC Intake (East and west are same altitude Level)[2]	13.9	13.9
Reactor Building Door (West)	10.0	7.4
Class 1E electrical room HVAC intake (South-east and South-west are same altitude Level) [2]	13.9	13.9
Class 1E electrical room HVAC intake (North-east and North-west are same altitude Level) [2]	13.9	13.9
Auxiliary Building HVAC intake and Technical Support Center HVAC intake (North and South) [3]	25.4	23.3

NOTES

(1) The distances are from the ground level (El. = 2'-7")

(2) The height to the upper and lower limit are same because the opening area are only located on the under side of receptors.

(3) A/B and TSC HVAC intakes are treated as the same receptors, because their louvers are integrated.

DCD_02.03.04-9

Table 2.3.4-1 Combination of Sources and Receptors for Steam System Piping Failure Analysis (Sheet 1 of 12)

Accidents		Steam system piping failure						
		MCR						
Sources	Locations (1)	Main steam line break releases						
		5 of the East	5 of the West	5 of the East		5 of the West		
	Release heights (m) (2)	12.8	26.3	12.8		26.3		
Receptors	Locations (1)	Intake		Inleak				
		MCR HVAC intake	MCR HVAC intake	Class 1E electrical room HVAC intake	Class 1E electrical room HVAC intake (7)	Class 1E electrical room HVAC intake	Class 1E electrical room HVAC intake (8)	Reactor building door
		a of the East	a of the West	d of the North-East	d of the South-East	d of the North-West	d of the South-West	b
	Receptor heights (m) (2)	13.9	13.9	13.9	13.9	13.9	13.9	10.0
Horizontal distance Source to Receptor (m)(3)		17	25	20	17	26	25	33
Vertical distance (m) (3)		0	-12	0	0	-12	-12	-16
Straight distance (m) (3)		17	28	20	17	29	28	37
Direction Receptor to Source (degree) (4)		252	95	237	252	107	95	132
Lateral diffusion coefficient (m)		0	0	0	0	0	0	0
Vertical diffusion coefficient (m)		0	0	0	0	0	0	0
χ/Q (s/m^3) (6)	0-8 hr	1.9×10^{-2}		1.9×10^{-2}				
	8-24 hr	1.1×10^{-2}		1.1×10^{-2}				
	24-96 hr	7.1×10^{-3}		7.1×10^{-3}				
	96-720 hr	~~3.1×10^{-3}~~ 4.7×10^{-3}		~~3.1×10^{-3}~~ 4.7×10^{-3}				

DCD_02.03.04-9

Table 2.3.4-1 Combination of Sources and Receptors for Steam System Piping Failure Analysis (Sheet 2 of 12)

Accidents		Steam system piping failure						
		MCR						
Sources	Locations (1)	Main steam line break releases						
		5 of the West	5 of the East	5 of the West		5 of the East		
	Release heights (m) (2)	26.3	12.8	26.3		12.8		
Receptors	Locations (1)	Intake		Inleak				
		MCR HVAC intake	MCR HVAC intake	Class 1E electrical room HVAC intake	Class 1E electrical room HVAC intake (7)	Class 1E electrical room HVAC intake	Class 1E electrical room HVAC intake (8)	Reactor building door
		a of the East	a of the West	d of the North-East	d of the South-East	d of the North-West	d of the South-West	b
	Receptor heights (m) (2)	13.9	13.9	13.9	13.9	13.9	13.9	10.0
Horizontal distance Source to Receptor (m)(3)		40	49	41	40	50	49	55
Vertical distance (m) (3)		-12	0	-12	-12	0	0	~~-2.7~~ -3
Straight distance (m) (3)		42	49	43	42	50	49	55
Direction Receptor to Source (degree) (4)		267	96	259	267	103	96	118
Lateral diffusion coefficient (m)		0	0	0	0	0	0	0
Vertical diffusion coefficient (m)		0	0	0	0	0	0	0
χ/Q (s/m^3) (6)	0-8 hr	1.9×10^{-2}		1.9×10^{-2}				
	8-24 hr	1.1×10^{-2}		1.1×10^{-2}				
	24-96 hr	7.1×10^{-3}		7.1×10^{-3}				
	96-720 hr	~~3.1×10^{-3}~~ 4.7×10^{-3}		~~3.1×10^{-3}~~ 4.7×10^{-3}				

DCD_02.03.04-9

Table 2.3.4-1 Combination of Sources and Receptors for Steam System Piping Failure Analysis (Sheet 3 of 12)

Accidents		Steam system piping failure			
		MCR			
Sources	Locations (1)	Main steam relief valve and safety valve releases			
		6 of the East (Main steam relief valve)	7 of the East (Main steam safety valve)	6 of the West (Main steam relief valve)	7 of the West (Main steam safety valve)
	Release heights (m) (2)	40.7	38.8	40.7	38.8
Receptors	Locations (1)	Intake			
		MCR HVAC intake	MCR HVAC intake	MCR HVAC intake	MCR HVAC intake
		a of the East	a of the East	a of the West	a of the West
	Receptor heights (m) (2)	13.9	13.9	13.9	13.9
Horizontal distance Source to Receptor (m)(3)		29	24	29	24
Vertical distance (m) (3)		-27	-25	-27	-25
Straight distance (m) (3)		39	35	39	35
Direction Receptor to Source (degree) (4)		303	283	57	77
Lateral diffusion coefficient (m)		0	0	0	0
Vertical diffusion coefficient (m)		0	0	0	0
χ/Q (s/m^3) (6)	0-8 hr	5.3×10^{-3}			
	8-24 hr	3.1×10^{-3}			
	24-96 hr	2.0×10^{-3}			
	96-720 hr	~~8.7×10^{-4}~~ 1.3×10^{-3}			

DCD_02.03.04-9

Table 2.3.4-1 Combination of Sources and Receptors for Steam System Piping Failure Analysis (Sheet 4 of 12)

Accidents		Steam system piping failure			
		MCR			
Sources	Locations (1)	Main steam relief valve and safety valve releases			
		6 of the West (Main steam relief valve)	7 of the West (Main steam safety valve)	6 of the East (Main steam relief valve)	7 of the East (Main steam safety valve)
	Release heights (m) (2)	40.7	38.8	40.7	38.8
Receptors	Locations (1)	Intake			
		MCR HVAC intake	MCR HVAC intake	MCR HVAC intake	MCR HVAC intake
		a of the East	a of the East	a of the West	a of the West
	Receptor heights (m) (2)	13.9	13.9	13.9	13.9
Horizontal distance Source to Receptor (m)(3)		43	41	43	41
Vertical distance (m) (3)		-27	-25	-27	-25
Straight distance (m) (3)		51	48	51	48
Direction Receptor to Source (degree) (4)		291	278	69	82
Lateral diffusion coefficient (m)		0	0	0	0
Vertical diffusion coefficient (m)		0	0	0	0
χ/Q (s/m^3) (6)	0-8 hr	5.3×10^{-3}			
	8-24 hr	3.1×10^{-3}			
	24-96 hr	2.0×10^{-3}			
	96-720 hr	~~8.7×10^{-4}~~ 1.3×10^{-3}			

DCD_02.03.04-9

Table 2.3.4-1 Combination of Sources and Receptors for Steam System Piping Failure Analysis (Sheet 5 of 12)

Accidents		Steam system piping failure			
		MCR			
Sources	Locations (1)	Main steam relief valve and safety valve releases			
		6 of the East (Main steam relief valve)		7 of the East (Main steam safety valve)	
	Release heights (m) (2)	40.7		38.8	
Receptors	Locations (1)	Inleak			
		Class 1E electrical room HVAC intake	Class 1E electrical room HVAC intake(7)	Class 1E electrical room HVAC intake	Class 1E electrical room HVAC intake(7)
		d of the North-East	d of the South-East	d of the North-East	d of the South-East
	Receptor heights (m) (2)	13.9	13.9	13.9	13.9
Horizontal distance Source to Receptor (m)(3)		27	29	24	24
Vertical distance (m) (3)		-27	-27	-25	-25
Straight distance (m) (3)		38	39	35	35
Direction Receptor to Source (degree) (4)		299	303	277	283
Lateral diffusion coefficient (m)		0	0	0	0
Vertical diffusion coefficient (m)		0	0	0	0
χ/Q (s/m^3) (6)	0-8 hr	5.3×10^{-3}			
	8-24 hr	3.1×10^{-3}			
	24-96 hr	2.0×10^{-3}			
	96-720 hr	~~8.7×10^{-4}~~ 1.3×10^{-3}			

DCD_02.03.04-9

Table 2.3.4-1 Combination of Sources and Receptors for Steam System Piping Failure Analysis (Sheet 6 of 12)

Accidents		Steam system piping failure					
		MCR					
Sources	Locations (1)	Main steam relief valve and safety valve releases					
		6 of the West (Main steam relief valve)			7 of the West (Main steam safety valve)		
	Release heights (m) (2)	40.7			38.8		
Receptors	Locations (1)	Inleak					
		Class 1E electrical room HVAC intake	Class 1E electrical room HVAC intake(8)	Reactor building door	Class 1E electrical room HVAC intake	Class 1E electrical room HVAC intake(8)	Reactor building door
		d of the North-West	d of the South-West	b	d of the North-West	d of the South-West	b
	Receptor heights (m) (2)	13.9	13.9	10.0	13.9	13.9	10.0
Horizontal distance Source to Receptor (m)(3)		27	29	24	24	24	24
Vertical distance (m) (3)		-27	-27	-30	-25	-25	-29
Straight distance (m) (3)		38	39	39	35	35	38
Direction Receptor to Source (degree) (4)		61	57	88	83	77	101
Lateral diffusion coefficient (m)		0	0	0	0	0	0
Vertical diffusion coefficient (m)		0	0	0	0	0	0
χ/Q (s/m^3) (6)	0-8 hr	5.3×10^{-3}					
	8-24 hr	3.1×10^{-3}					
	24-96 hr	2.0×10^{-3}					
	96-720 hr	~~8.7×10^{-4}~~ 1.3×10^{-3}					

DCD_02.03.04-9

Table 2.3.4-1 Combination of Sources and Receptors for Steam System Piping Failure Analysis (Sheet 7 of 12)

Accidents		Steam system piping failure			
		MCR			
Sources	Locations (1)	Main steam relief valve and safety valve releases			
		6 of the West (Main steam relief valve)		7 of the West (Main steam safety valve)	
	Release heights (m) (2)	40.7		38.8	
Receptors	Locations (1)	Inleak			
		Class 1E electrical room HVAC intake	Class 1E electrical room HVAC intake(7)	Class 1E electrical room HVAC intake	Class 1E electrical room HVAC intake(7)
		d of the North-East	d of the South-East	d of the North-East	d of the South-East
	Receptor heights (m) (2)	13.9	13.9	13.9	13.9
Horizontal distance Source to Receptor (m)(3)		42	43	41	41
Vertical distance (m) (3)		-27	-27	-25	-25
Straight distance (m) (3)		50	51	47	48
Direction Receptor to Source (degree) (4)		288	291	274	278
Lateral diffusion coefficient (m)		0	0	0	0
Vertical diffusion coefficient (m)		0	0	0	0
χ/Q (s/m^3) (6)	0-8 hr	5.3×10^{-3}			
	8-24 hr	3.1×10^{-3}			
	24-96 hr	2.0×10^{-3}			
	96-720 hr	~~8.7×10^{-4}~~ 1.3×10^{-3}			

DCD_02.03.04-9

Table 2.3.4-1 Combination of Sources and Receptors for Steam System Piping Failure Analysis (Sheet 8 of 12)

Accidents		Steam system piping failure					
		MCR					
Sources	Locations (1)	Main steam relief valve and safety valve releases					
		6 of the East (Main steam relief valve)			7 of the East (Main steam safety valve)		
	Release heights (m) (2)	40.7			38.8		
Receptors	Locations (1)	Inleak					
		Class 1E electrical room HVAC intake	Class 1E electrical room HVAC intake(8)	Reactor building door	Class 1E electrical room HVAC intake	Class 1E electrical room HVAC intake(8)	Reactor building door
		d of the North-West	d of the South-West	b	d of the North-West	d of the South-West	b
	Receptor heights (m) (2)	13.9	13.9	10.0	13.9	13.9	10.0
Horizontal distance Source to Receptor (m)(3)		42	43	41	41	41	41
Vertical distance (m) (3)		-27	-27	-30	-25	-25	-29
Straight distance (m) (3)		50	51	51	47	48	50
Direction Receptor to Source (degree) (4)		72	69	89	86	82	96
Lateral diffusion coefficient (m)		0	0	0	0	0	0
Vertical diffusion coefficient (m)		0	0	0	0	0	0
χ/Q (s/m^3) (6)	0-8 hr	5.3×10^{-3}					
	8-24 hr	3.1×10^{-3}					
	24-96 hr	2.0×10^{-3}					
	96-720 hr	~~8.7×10^{-4}~~ 1.3×10^{-3}					

DCD_02.03.04-9

Table 2.3.4-1 Combination of Sources and Receptors for Steam System Piping Failure Analysis (Sheet 9 of 12)

Accidents		Steam system piping failure			
		TSC			
Sources	Locations (1)	Main steam line break releases			
		5 of the West			
	Release heights (m) (2)	26.3			
Receptors	Locations (1)	Intake		Inleak	
		TSC HVAC intake	TSC HVAC intake	Auxiliary building HVAC intake	Auxiliary building HVAC intake
		c of the North	c of the South	c of the North	c of the South
	Receptor heights (m) (2)	25.4	25.4	25.4	25.4
Horizontal distance to Intake (m)(3)		80	70	80	70
Vertical distance (m) (3)		-1	-1	-1	-1
Straight distance (m) (3)		80	70	80	70
Direction Receptor to Source (degree) (4)		129	117	129	117
Lateral diffusion coefficient (m)		0	0	0	0
Vertical diffusion coefficient (m)		0	0	0	0
χ/Q (s/m^3) (6)	0-8 hr	1.4×10^{-3}		1.4×10^{-3}	
	8-24 hr	8.4×10^{-4}		8.4×10^{-4}	
	24-96 hr	5.3×10^{-4}		5.3×10^{-4}	
	96-720 hr	~~2.3×10^{-4}~~ 3.5×10^{-4}		~~2.3×10^{-4}~~ 3.5×10^{-4}	

DCD_02.03.04-9

Table 2.3.4-1 Combination of Sources and Receptors for Steam System Piping Failure Analysis (Sheet 10 of 12)

Accidents		Steam system piping failure			
		TSC			
Sources	Locations (1)	Main steam line break releases			
		5 of the East			
	Release heights (m) (2)	12.8			
Receptors	Locations (1)	Intake		Inleak	
		TSC HVAC intake	TSC HVAC intake	Auxiliary building HVAC intake	Auxiliary building HVAC intake
		c of the North	c of the South	c of the North	c of the South
	Receptor heights (m) (2)	23.3	23.3	23.3	23.3
Horizontal distance to Intake (m)(3)		101	93	101	93
Vertical distance (m) (3)		10	10	10	10
Straight distance (m) (3)		102	94	102	94
Direction Receptor to Source (degree) (4)		122	112	122	112
Lateral diffusion coefficient (m)		0	0	0	0
Vertical diffusion coefficient (m)		0	0	0	0
χ/Q (s/m^3) (6)	0-8 hr	1.4×10^{-3}		1.4×10^{-3}	
	8-24 hr	8.4×10^{-4}		8.4×10^{-4}	
	24-96 hr	5.3×10^{-4}		5.3×10^{-4}	
	96-720 hr	~~2.3×10^{-4}~~ 3.5×10^{-4}		~~2.3×10^{-4}~~ 3.5×10^{-4}	

DCD_02.03.04-9

Table 2.3.4-1 Combination of Sources and Receptors for Steam System Piping Failure Analysis (Sheet 11 of 12)

Accidents		Steam system piping failure							
		TSC							
Sources	Locations (1)	Main steam relief valve and safety valve releases							
		6 of the West (Main steam relief valve)		7 of the West (Main steam safety valve)		6 of the West (Main steam relief valve)		7 of the West (Main steam safety valve)	
	Release heights (m) (2)	40.7		38.8		40.7		38.8	
Receptors	Locations (1)	Intake				Inleak			
		TSC HVAC intake	TSC HVAC intake	TSC HVAC intake	TSC HVAC intake	Auxiliary building HVAC intake	Auxiliary building HVAC intake	Auxiliary building HVAC intake	Auxiliary building HVAC intake
		c of the North	c of the South	c of the North	c of the South	c of the North	c of the South	c of the North	c of the South
	Receptor heights (m) (2)	25.4	25.4	25.4	25.4	25.4	25.4	25.4	25.4
Horizontal distance Source to Receptor (m)(3)		67	~~63~~ 62	70	63	67	~~63~~ 62	70	63
Vertical distance (m) (3)		-15	-15	-13	-13	-15	-15	-13	-13
Straight distance (m) (3)		69	64	71	65	69	64	71	65
Direction Receptor to Source (degree) (4)		113	97	117	102	113	97	117	102
Lateral diffusion coefficient (m)		0	0	0	0	0	0	0	0
Vertical diffusion coefficient (m)		0	0	0	0	0	0	0	0
χ/Q (s/m^3) (6)	0-8 hr	1.7×10^{-3}				1.7×10^{-3}			
	8-24 hr	9.9×10^{-4}				9.9×10^{-4}			
	24-96 hr	6.3×10^{-4}				6.3×10^{-4}			
	96-720 hr	~~2.8×10^{-4}~~ 4.2×10^{-4}				~~2.8×10^{-4}~~ 4.2×10^{-4}			

DCD_02.03.04-9

Table 2.3.4-1 Combination of Sources and Receptors for Steam System Piping Failure Analysis (Sheet 12 of 12)

Accidents		Steam system piping failure							
		TSC							
Sources	Locations (1)	Main steam relief valve and safety valve releases							
		6 of the East (Main steam relief valve)		7 of the East (Main steam safety valve)		6 of the East (Main steam relief valve)		7 of the East (Main steam safety valve)	
	Release heights (m) (2)	40.7		38.8		40.7		38.8	
Receptors	Locations (1)	Intake				Inleak			
		TSC HVAC intake	TSC HVAC intake	TSC HVAC intake	TSC HVAC intake	Auxiliary building HVAC intake	Auxiliary building HVAC intake	Auxiliary building HVAC intake	Auxiliary building HVAC intake
		c of the North	c of the South	c of the North	c of the South	c of the North	c of the South	c of the North	c of the South
	Receptor heights (m) (2)	25.4	25.4	25.4	25.4	25.4	25.4	25.4	25.4
Horizontal distance Source to Receptor (m)(3)		83	79	85	80	83	79	85	80
Vertical distance (m) (3)		-15	-15	-13	-13	-15	-15	-13	-13
Straight distance (m) (3)		84	80	86	81	84	80	86	81
Direction Receptor to Source (degree) (4)		109	96	112	100	109	96	112	100
Lateral diffusion coefficient (m)		0	0	0	0	0	0	0	0
Vertical diffusion coefficient (m)		0	0	0	0	0	0	0	0
χ/Q (s/m^3) (6)	0-8 hr	1.7×10^{-3}				1.7×10^{-3}			
	8-24 hr	9.9×10^{-4}				9.9×10^{-4}			
	24-96 hr	6.3×10^{-4}				6.3×10^{-4}			
	96-720 hr	~~2.8×10^{-4}~~ 4.2×10^{-4}				~~2.8×10^{-4}~~ 4.2×10^{-4}			

DCD_02.03.04-9

Table 2.3.4-2 Combination of Sources and Receptors for RCP Rotor Seizure Analysis (Sheet 1 of 8)

Accidents		RCP rotor seizure accident			
		MCR			
Sources	Locations (1)	Main steam relief valve and safety valve releases			
		6 of the East (Main steam relief valve)	7 of the East (Main steam safety valve)	6 of the West (Main steam relief valve)	7 of the West (Main steam safety valve)
	Release heights (m) (2)	40.7	38.8	40.7	38.8
Receptors	Locations (1)	Intake			
		MCR HVAC intake	MCR HVAC intake	MCR HVAC intake	MCR HVAC intake
		a of the East	a of the East	a of the West	a of the West
	Receptor heights (m) (2)	13.9	13.9	13.9	13.9
Horizontal distance Source to Receptor (m)(3)		29	24	29	24
Vertical distance (m) (3)		-27	-25	-27	-25
Straight distance (m) (3)		39	35	39	35
Direction Receptor to Source (degree) (4)		303	283	57	77
Lateral diffusion coefficient (m)		0	0	0	0
Vertical diffusion coefficient (m)		0	0	0	0
χ/Q (s/m^3) (6)	0-8 hr	5.3×10^{-3}			
	8-24 hr	3.1×10^{-3}			
	24-96 hr	2.0×10^{-3}			
	96-720 hr	~~8.7×10^{-4}~~ 1.3×10^{-3}			

DCD_02.03.04-9

Table 2.3.4-2 Combination of Sources and Receptors for RCP Rotor Seizure Analysis (Sheet 2 of 8)

Accidents		RCP rotor seizure accident			
		MCR			
Sources	Locations (1)	Main steam relief valve and safety valve releases			
		6 of the West (Main steam relief valve)	7 of the West (Main steam safety valve)	6 of the East (Main steam relief valve)	7 of the East (Main steam safety valve)
	Release heights (m) (2)	40.7	38.8	40.7	38.8
Receptors	Locations (1)	Intake			
		MCR HVAC intake	MCR HVAC intake	MCR HVAC intake	MCR HVAC intake
		a of the East	a of the East	a of the West	a of the West
	Receptor heights (m) (2)	13.9	13.9	13.9	13.9
Horizontal distance Source to Receptor (m)(3)		43	41	43	41
Vertical distance (m) (3)		-27	-25	-27	-25
Straight distance (m) (3)		51	48	51	48
Direction Receptor to Source (degree) (4)		291	278	69	82
Lateral diffusion coefficient (m)		0	0	0	0
Vertical diffusion coefficient (m)		0	0	0	0
χ/Q (s/m^3) (6)	0-8 hr	5.3×10^{-3}			
	8-24 hr	3.1×10^{-3}			
	24-96 hr	2.0×10^{-3}			
	96-720 hr	~~8.7×10^{-4}~~ 1.3×10^{-3}			

DCD_02.03.04-9

Table 2.3.4-2 Combination of Sources and Receptors for RCP Rotor Seizure Analysis (Sheet 3 of 8)

Accidents		RCP rotor seizure accident			
		MCR			
Sources	Locations (1)	Main steam relief valve and safety valve releases			
		6 of the East (Main steam relief valve)		7 of the East (Main steam safety valve)	
	Release heights (m) (2)	40.7		38.8	
Receptors	Locations (1)	Inleak			
		Class 1E electrical room HVAC intake	Class 1E electrical room HVAC intake(7)	Class 1E electrical room HVAC intake	Class 1E electrical room HVAC intake(7)
		d of the North-East	d of the South-East	d of the North-East	d of the South-East
	Receptor heights (m) (2)	13.9	13.9	13.9	13.9
Horizontal distance Source to Receptor (m)(3)		27	29	24	24
Vertical distance (m) (3)		-27	-27	-25	-25
Straight distance (m) (3)		38	39	35	35
Direction Receptor to Source (degree) (4)		299	303	277	283
Lateral diffusion coefficient (m)		0	0	0	0
Vertical diffusion coefficient (m)		0	0	0	0
χ/Q (s/m^3) (6)	0-8 hr	5.3×10^{-3}			
	8-24 hr	3.1×10^{-3}			
	24-96 hr	2.0×10^{-3}			
	96-720 hr	~~8.7×10^{-4}~~ 1.3×10^{-3}			

DCD_02.03.04-9

Table 2.3.4-2 Combination of Sources and Receptors for RCP Rotor Seizure Analysis (Sheet 4 of 8)

Accidents		RCP rotor seizure accident					
		MCR					
Sources	Locations (1)	Main steam relief valve and safety valve releases					
		6 of the West (Main steam relief valve)			7 of the West (Main steam safety valve)		
	Release heights (m) (2)	40.7			38.8		
Receptors	Locations (1)	Inleak					
		Class 1E electrical room HVAC intake	Class 1E electrical room HVAC intake(8)	Reactor building door	Class 1E electrical room HVAC intake	Class 1E electrical room HVAC intake(8)	Reactor building door
		d of the North-West	d of the South-West	b	d of the North-West	d of the South-West	b
	Receptor heights (m) (2)	13.9	13.9	10.0	13.9	13.9	10.0
Horizontal distance Source to Receptor (m)(3)		27	29	24	24	24	24
Vertical distance (m) (3)		-27	-27	-30	-25	-25	-29
Straight distance (m) (3)		38	39	39	35	35	38
Direction Receptor to Source (degree) (4)		61	57	88	83	77	101
Lateral diffusion coefficient (m)		0	0	0	0	0	0
Vertical diffusion coefficient (m)		0	0	0	0	0	0
χ/Q (s/m^3) (6)	0-8 hr	5.3×10^{-3}					
	8-24 hr	3.1×10^{-3}					
	24-96 hr	2.0×10^{-3}					
	96-720 hr	~~8.7×10^{-4}~~ 1.3×10^{-3}					

DCD_02.03.04-9

Table 2.3.4-2 Combination of Sources and Receptors for RCP Rotor Seizure Analysis (Sheet 5 of 8)

Accidents		RCP rotor seizure accident			
		MCR			
Sources	Locations (1)	Main steam relief valve and safety valve releases			
		6 of the West (Main steam relief valve)		7 of the West (Main steam safety valve)	
	Release heights (m) (2)	40.7		38.8	
Receptors	Locations (1)	Inleak			
		Class 1E electrical room HVAC intake	Class 1E electrical room HVAC intake(7)	Class 1E electrical room HVAC intake	Class 1E electrical room HVAC intake(7)
		d of the North-East	d of the South-East	d of the North-East	d of the South-East
	Receptor heights (m) (2)	13.9	13.9	13.9	13.9
Horizontal distance Source to Receptor (m)(3)		42	43	41	41
Vertical distance (m) (3)		-27	-27	-25	-25
Straight distance (m) (3)		50	51	47	48
Direction Receptor to Source (degree) (4)		288	291	274	278
Lateral diffusion coefficient (m)		0	0	0	0
Vertical diffusion coefficient (m)		0	0	0	0
χ/Q (s/m^3) (6)	0-8 hr	5.3×10^{-3}			
	8-24 hr	3.1×10^{-3}			
	24-96 hr	2.0×10^{-3}			
	96-720 hr	~~8.7×10^{-4}~~ 1.3×10^{-3}			

DCD_02.03.04-9

Table 2.3.4-2 Combination of Sources and Receptors for RCP Rotor Seizure Analysis (Sheet 6 of 8)

Accidents		RCP rotor seizure accident					
		MCR					
Sources	Locations (1)	Main steam relief valve and safety valve releases					
		6 of the East (Main steam relief valve)			7 of the East (Main steam safety valve)		
	Release heights (m) (2)	40.7			38.8		
Receptors	Locations (1)	Inleak					
		Class 1E electrical room HVAC intake	Class 1E electrical room HVAC intake(8)	Reactor building door	Class 1E electrical room HVAC intake	Class 1E electrical room HVAC intake(8)	Reactor building door
		d of the North-West	d of the South-West	b	d of the North-West	d of the South-West	b
	Receptor heights (m) (2)	13.9	13.9	10.0	13.9	13.9	10.0
Horizontal distance Source to Receptor (m)(3)		42	43	41	41	41	41
Vertical distance (m) (3)		-27	-27	-30	-25	-25	-29
Straight distance (m) (3)		50	51	51	47	48	50
Direction Receptor to Source (degree) (4)		72	69	89	86	82	96
Lateral diffusion coefficient (m)		0	0	0	0	0	0
Vertical diffusion coefficient (m)		0	0	0	0	0	0
χ/Q (s/m^3) (6)	0-8 hr	5.3×10^{-3}					
	8-24 hr	3.1×10^{-3}					
	24-96 hr	2.0×10^{-3}					
	96-720 hr	~~8.7×10^{-4}~~ 1.3×10^{-3}					

DCD_02.03.04-9

Table 2.3.4-2 Combination of Sources and Receptors for RCP Rotor Seizure Analysis (Sheet 7 of 8)

Accidents		RCP rotor seizure accident							
		TSC							
Sources	Locations (1)	Main steam relief valve and safety valve releas							
		6 of the West (Main steam relief valve)		7 of the West (Main steam safety valve)		6 of the West (Main steam relief valve)		7 of the West (Main steam safety valve)	
	Release heights (m) (2)	40.7		38.8		40.7		38.8	
Receptors	Locations (1)	Intake				Inleak			
		TSC HVAC intake	TSC HVAC intake	TSC HVAC intake	TSC HVAC intake	Auxiliary building HVAC intake	Auxiliary building HVAC intake	Auxiliary building HVAC intake	Auxiliary building HVAC intake
		c of the North	c of the South	c of the North	c of the South	c of the North	c of the South	c of the North	c of the South
	Receptor heights (m) (2)	25.4	25.4	25.4	25.4	25.4	25.4	25.4	25.4
Horizontal distance Source to Receptor (m)(3)		67	62	70	63	67	62	70	63
Vertical distance (m) (3)		-15	-15	-13	-13	-15	-15	-13	-13
Straight distance (m) (3)		69	64	71	65	69	64	71	65
Direction Receptor to Source (degree) (4)		113	97	117	102	113	97	117	102
Lateral diffusion coefficient (m)		0	0	0	0	0	0	0	0
Vertical diffusion coefficient (m)		0	0	0	0	0	0	0	0
χ/Q (s/m^3) (6)	0-8 hr	1.7×10^{-3}				1.7×10^{-3}			
	8-24 hr	9.9×10^{-4}				9.9×10^{-4}			
	24-96 hr	6.3×10^{-4}				6.3×10^{-4}			
	96-720 hr	~~2.8×10^{-4}~~ 4.2×10^{-4}				~~2.8×10^{-4}~~ 4.2×10^{-4}			

DCD_02.03.04-9

Table 2.3.4-2 Combination of Sources and Receptors for RCP Rotor Seizure Analysis (Sheet 8 of 8)

Accidents		RCP rotor seizure accident							
		TSC							
Sources	Locations (1)	Main steam relief valve and safety valve releases							
		6 of the East (Main steam relief valve)		7 of the East (Main steam safety valve)		6 of the East (Main steam relief valve)		7 of the East (Main steam safety valve)	
	Release heights (m) (2)	40.7		38.8		40.7		38.8	
Receptors	Locations (1)	Intake				Inleak			
		TSC HVAC intake	TSC HVAC intake	TSC HVAC intake	TSC HVAC intake	Auxiliary building HVAC intake	Auxiliary building HVAC intake	Auxiliary building HVAC intake	Auxiliary building HVAC intake
		c of the North	c of the South	c of the North	c of the South	c of the North	c of the South	c of the North	c of the South
	Receptor heights (m) (2)	25.4	25.4	25.4	25.4	25.4	25.4	25.4	25.4
Horizontal distance Source to Receptor (m)(3)		83	79	85	80	83	79	85	80
Vertical distance (m) (3)		-15	-15	-13	-13	-15	-15	-13	-13
Straight distance (m) (3)		84	80	86	81	84	80	86	81
Direction Receptor to Source (degree) (4)		109	96	112	100	109	96	112	100
Lateral diffusion coefficient (m)		0	0	0	0	0	0	0	0
Vertical diffusion coefficient (m)		0	0	0	0	0	0	0	0
χ/Q (s/m^3) (6)	0-8 hr	1.7×10^{-3}				1.7×10^{-3}			
	8-24 hr	9.9×10^{-4}				9.9×10^{-4}			
	24-96 hr	6.3×10^{-4}				6.3×10^{-4}			
	96-720 hr	~~2.8×10^{-4}~~ 4.2×10^{-4}				~~2.8×10^{-4}~~ 4.2×10^{-4}			

DCD_02.03.04-9

Table 2.3.4-3 Combination of Sources and Receptors for Rod Ejection Accident Analysis (Sheet 1 of 11)

Accidents		Rod Ejection Accident								
		MCR								
Sources	Locations (1)	Plant vent								
		9								
	Release heights (m) (2)	69.9								
Receptors	Locations (1)	Intake		Inleak						
		MCR HVAC intake	MCR HVAC intake	Class 1E electrical room HVAC intake	Class 1E electrical room HVAC intake(7)	Class 1E electrical room HVAC intake	Class 1E electrical room HVAC intake(8)	Auxiliary building HVAC intake	Auxiliary building HVAC intake	Reactor building door
		a of the East	a of the West	d of the North-East	d of the South-East	d of the North-West	d of the South-West	c of the North	c of the South	b
	Receptor heights (m) (2)	13.9	13.9	13.9	13.9	13.9	13.9	25.4	25.4	10.0
Horizontal distance Source to Receptor (m)(3)		68	53	66	68	51	53	55	61	37
Vertical distance (m) (3)		-56	-56	-56	-56	-56	-56	-45	-45	-60
Straight distance (m) (3)		88	77	87	88	76	77	71	76	70
Direction Receptor to Source (degree) (4)		318	19	316	318	20	19	81	64	28
Lateral diffusion coefficient (m)		0	0	0	0	0	0	0	0	0
Vertical diffusion coefficient (m)		0	0	0	0	0	0	0	0	0
χ/Q (s/m^3) (6)	0-8 hr	1.1×10^{-3}		1.4×10^{-3}						
	8-24 hr	6.6×10^{-4}		8.0×10^{-4}						
	24-96 hr	4.2×10^{-4}		5.1×10^{-4}						
	96-720 hr	~~1.9×10^{-4}~~ 2.8×10^{-4}		~~2.2×10^{-4}~~ 3.3×10^{-4}						

DCD_02.03.04-9

Table 2.3.4-3 Combination of Sources and Receptors for Rod Ejection Accident Analysis (Sheet 2 of 11)

Accidents		Rod Ejection Accident								
		MCR								
Sources	Locations (1)	Ground level containment release point (5)								
		2 of the East	2 of the West	1 of the East	2 of the East	1 of the West	2 of the West	3 of the North	3 of the South	4
	Release heights (m) (2)	49.5								
Receptors	Locations (1)	Intake		Inleak						
		MCR HVAC intake	MCR HVAC intake	Class 1E electrical room HVAC intake	Class 1E electrical room HVAC intake(7)	Class 1E electrical room HVAC intake	Class 1E electrical room HVAC intake(8)	Auxiliary building HVAC intake	Auxiliary building HVAC intake	Reactor building door
		a of the East	a of the West	d of the North-East	d of the South-East	d of the North-West	d of the South-West	c of the North	c of the South	b
	Receptor heights (m) (2)	13.9	13.9	13.9	13.9	13.9	13.9	25.4	25.4	10.0
Horizontal distance Source to Receptor (m)(3)		29	29	27	29	27	29	46	48	16
Vertical distance (m) (3)		-35	-35	-35	-35	-35	-35	-24	-24	-39
Straight distance (m) (3)		46	46	44	46	44	46	52	54	43
Direction Receptor to Source (degree) (4)		322	38	320	322	40	38	91	76	53
Lateral diffusion coefficient (m)		7.98	7.98	7.98	7.98	7.98	7.98	7.98	7.98	7.98
Vertical diffusion coefficient (m)		5.03	5.03	5.03	5.03	5.03	5.03	5.03	5.03	5.03
χ/Q (s/m^3) (6)	0-8 hr	2.2×10^{-3}		2.4×10^{-3}						
	8-24 hr	1.3×10^{-3}		1.4×10^{-3}						
	24-96 hr	8.3×10^{-4}		9.1×10^{-4}						
	96-720 hr	~~3.6×10^{-4}~~ 5.5×10^{-4}		~~4.0×10^{-4}~~ 6.0×10^{-4}						

DCD_02.03.04-9

Table 2.3.4-3 Combination of Sources and Receptors for Rod Ejection Accident Analysis (Sheet 3 of 11)

Accidents		Rod Ejection Accident			
		MCR			
Sources	Locations (1)	Main steam relief valve and safety valve releases			
		6 of the East (Main steam relief valve)	7 of the East (Main steam safety valve)	6 of the West (Main steam relief valve)	7 of the West (Main steam safety valve)
	Release heights (m) (2)	40.7	38.8	40.7	38.8
Receptors	Locations (1)	Intake			
		MCR HVAC intake	MCR HVAC intake	MCR HVAC intake	MCR HVAC intake
		a of the East	a of the East	a of the West	a of the West
	Receptor heights (m) (2)	13.9	13.9	13.9	13.9
Horizontal distance Source to Receptor (m)(3)		29	24	29	24
Vertical distance (m) (3)		-27	-25	-27	-25
Straight distance (m) (3)		39	35	39	35
Direction Receptor to Source (degree) (4)		303	283	57	77
Lateral diffusion coefficient (m)		0	0	0	0
Vertical diffusion coefficient (m)		0	0	0	0
χ/Q (s/m^3) (6)	0-8 hr	5.3×10^{-3}			
	8-24 hr	3.1×10^{-3}			
	24-96 hr	2.0×10^{-3}			
	96-720 hr	~~8.7×10^{-4}~~ 1.3×10^{-3}			

DCD_02.03.04-9

Table 2.3.4-3 Combination of Sources and Receptors for Rod Ejection Accident Analysis (Sheet 4 of 11)

Accidents		Rod Ejection Accident			
		MCR			
Sources	Locations (1)	Main steam relief valve and safety valve releases			
		6 of the West (Main steam relief valve)	7 of the West (Main steam safety valve)	6 of the East (Main steam relief valve)	7 of the East (Main steam safety valve)
	Release heights (m) (2)	40.7	38.8	40.7	38.8
Receptors	Locations (1)	Intake			
		MCR HVAC intake	MCR HVAC intake	MCR HVAC intake	MCR HVAC intake
		a of the East	a of the East	a of the West	a of the West
	Receptor heights (m) (2)	13.9	13.9	13.9	13.9
Horizontal distance Source to Receptor (m)(3)		43	41	43	41
Vertical distance (m) (3)		-27	-25	-27	-25
Straight distance (m) (3)		51	48	51	48
Direction Receptor to Source (degree) (4)		291	278	69	82
Lateral diffusion coefficient (m)		0	0	0	0
Vertical diffusion coefficient (m)		0	0	0	0
χ/Q (s/m^3) (6)	0-8 hr	5.3×10^{-3}			
	8-24 hr	3.1×10^{-3}			
	24-96 hr	2.0×10^{-3}			
	96-720 hr	~~8.7×10^{-4}~~ 1.3×10^{-3}			

DCD_02.03.04-9

Table 2.3.4-3 Combination of Sources and Receptors for Rod Ejection Accident Analysis (Sheet 5 of 11)

Accidents		Rod Ejection Accident			
		MCR			
Sources	Locations (1)	Main steam relief valve and safety valve releases			
		6 of the East (Main steam relief valve)		7 of the East (Main steam safety valve)	
	Release heights (m) (2)	40.7		38.8	
Receptors	Locations (1)	Inleak			
		Class 1E electrical room HVAC intake	Class 1E electrical room HVAC intake(7)	Class 1E electrical room HVAC intake	Class 1E electrical room HVAC intake(7)
		d of the North-East	d of the South-East	d of the North-East	d of the South-East
	Receptor heights (m) (2)	13.9	13.9	13.9	13.9
Horizontal distance Source to Receptor (m)(3)		27	29	24	24
Vertical distance (m) (3)		-27	-27	-25	-25
Straight distance (m) (3)		38	39	35	35
Direction Receptor to Source (degree) (4)		299	303	277	283
Lateral diffusion coefficient (m)		0	0	0	0
Vertical diffusion coefficient (m)		0	0	0	0
χ/Q (s/m^3) (6)	0-8 hr	5.3×10^{-3}			
	8-24 hr	3.1×10^{-3}			
	24-96 hr	2.0×10^{-3}			
	96-720 hr	~~8.7×10^{-4}~~ 1.3×10^{-3}			

DCD_02.03.04-9

Table 2.3.4-3 Combination of Sources and Receptors for Rod Ejection Accident Analysis (Sheet 6 of 11)

Accidents		Rod Ejection Accident					
		MCR					
Sources	Locations (1)	Main steam relief valve and safety valve releases					
		6 of the West (Main steam relief valve)			7 of the West (Main steam safety valve)		
	Release heights (m) (2)	40.7			38.8		
Receptors	Locations (1)	Inleak					
		Class 1E electrical room HVAC intake	Class 1E electrical room HVAC intake(8)	Reactor building door	Class 1E electrical room HVAC intake	Class 1E electrical room HVAC intake(8)	Reactor building door
		d of the North-West	d of the South-West	b	d of the North-West	d of the South-West	b
	Receptor heights (m) (2)	13.9	13.9	10.0	13.9	13.9	10.0
Horizontal distance Source to Receptor (m)(3)		27	29	24	24	24	24
Vertical distance (m) (3)		-27	-27	-30	-25	-25	-29
Straight distance (m) (3)		38	39	39	35	35	38
Direction Receptor to Source (degree) (4)		61	57	88	83	77	101
Lateral diffusion coefficient (m)		0	0	0	0	0	0
Vertical diffusion coefficient (m)		0	0	0	0	0	0
χ/Q (s/m^3) (6)	0-8 hr	5.3×10^{-3}					
	8-24 hr	3.1×10^{-3}					
	24-96 hr	2.0×10^{-3}					
	96-720 hr	~~8.7×10^{-4}~~ 1.3×10^{-3}					

DCD_02.03.04-9

Table 2.3.4-3 Combination of Sources and Receptors for Rod Ejection Accident Analysis (Sheet 7 of 11)

Accidents		Rod Ejection Accident			
		MCR			
Sources	Locations (1)	Main steam relief valve and safety valve releases			
		6 of the West (Main steam relief valve)		7 of the West (Main steam safety valve)	
	Release heights (m) (2)	40.7		38.8	
Receptors	Locations (1)	Inleak			
		Class 1E electrical room HVAC intake	Class 1E electrical room HVAC intake(7)	Class 1E electrical room HVAC intake	Class 1E electrical room HVAC intake(7)
		d of the North-East	d of the South-East	d of the North-East	d of the South-East
	Receptor heights (m) (2)	13.9	13.9	13.9	13.9
Horizontal distance Source to Receptor (m)(3)		42	43	41	41
Vertical distance (m) (3)		-27	-27	-25	-25
Straight distance (m) (3)		50	51	47	48
Direction Receptor to Source (degree) (4)		288	291	274	278
Lateral diffusion coefficient (m)		0	0	0	0
Vertical diffusion coefficient (m)		0	0	0	0
χ/Q (s/m^3) (6)	0-8 hr	5.3×10^{-3}			
	8-24 hr	3.1×10^{-3}			
	24-96 hr	2.0×10^{-3}			
	96-720 hr	~~8.7×10^{-4}~~ 1.3×10^{-3}			

DCD_02.03.04-9

Table 2.3.4-3 Combination of Sources and Receptors for Rod Ejection Accident Analysis (Sheet 8 of 11)

Accidents		Rod Ejection Accident					
		MCR					
Sources	Locations (1)	Main steam relief valve and safety valve releases					
		6 of the East (Main steam relief valve)			7 of the East (Main steam safety valve)		
	Release heights (m) (2)	40.7			38.8		
Receptors	Locations (1)	Inleak					
		Class 1E electrical room HVAC intake	Class 1E electrical room HVAC intake(8)	Reactor building door	Class 1E electrical room HVAC intake	Class 1E electrical room HVAC intake(8)	Reactor building door
		d of the North-West	d of the South-West	b	d of the North-West	d of the South-West	b
	Receptor heights (m) (2)	13.9	13.9	10.0	13.9	13.9	10.0
Horizontal distance Source to Receptor (m)(3)		42	43	41	41	41	41
Vertical distance (m) (3)		-27	-27	-30	-25	-25	-29
Straight distance (m) (3)		50	51	51	47	48	50
Direction Receptor to Source (degree) (4)		72	69	89	86	82	96
Lateral diffusion coefficient (m)		0	0	0	0	0	0
Vertical diffusion coefficient (m)		0	0	0	0	0	0
χ/Q (s/m^3) (6)	0-8 hr	5.3×10^{-3}					
	8-24 hr	3.1×10^{-3}					
	24-96 hr	2.0×10^{-3}					
	96-720 hr	~~8.7×10^{-4}~~ 1.3×10^{-3}					

DCD_02.03.04-9

Table 2.3.4-3 Combination of Sources and Receptors for Rod Ejection Accident Analysis ~~in the~~ (Sheet 9 of 11)

Accidents		Rod Ejection Accident							
		TSC							
Sources	Locations (1)	Plant vent		Ground level containment release point (5)		Plant vent		Ground level containment release point (5)	
		9		3 of the North	3 of the South	9		3 of the North	3 of the South
	Release heights (m) (2)	69.9		49.5		69.9		49.5	
Receptors	Locations (1)	Intake				inleak			
		TSC HVAC intake	TSC HVAC intake	TSC HVAC intake	TSC HVAC intake	Auxiliary Building HVAC Intake	Auxiliary Building HVAC Intake	Auxiliary Building HVAC Intake	Auxiliary Building HVAC Intake
		c of the North	c of the South	c of the North	c of the South	c of the North	c of the South	c of the North	c of the South
	Receptor heights (m) (2)	25.4	25.4	25.4	25.4	25.4	25.4	25.4	25.4
Horizontal distance Source to Receptor (m)(3)		55	61	46	48	55	61	46	48
Vertical distance (m) (3)		-45	-45	-24	-24	-45	-45	-24	-24
Straight distance (m) (3)		71	76	52	54	71	76	52	54
Direction Receptor to Source (degree) (4)		81	64	91	76	81	64	91	76
Lateral diffusion coefficient (m)		0	0	~~0~~ 7.98	~~0~~ 7.98	0	0	~~0~~ 7.98	~~0~~ 7.98
Vertical diffusion coefficient (m)		0	0	~~0~~ 5.03	~~0~~ 5.03	0	0	~~0~~ 5.03	~~0~~ 5.03
χ/Q (s/m^3) (6)	0-8 hr	1.4×10^{-3}		1.9×10^{-3}		1.4×10^{-3}		1.9×10^{-3}	
	8-24 hr	8.0×10^{-4}		1.1×10^{-3}		8.0×10^{-4}		1.1×10^{-3}	
	24-96 hr	5.1×10^{-4}		7.2×10^{-4}		5.1×10^{-4}		7.2×10^{-4}	
	96-720 hr	~~2.2×10^{-4}~~ 3.3×10^{-4}		~~3.2×10^{-4}~~ 4.8×10^{-4}		~~2.2×10^{-4}~~ 3.3×10^{-4}		~~3.2×10^{-4}~~ 4.8×10^{-4}	

DCD_02.03.04-9

Table 2.3.4-3 Combination of Sources and Receptors for Rod Ejection Accident Analysis (Sheet 10 of 11)

Accidents		Rod Ejection Accident							
		TSC							
Sources	Locations (1)	Main steam relief valve and safety valve releases							
		6 of the West (Main steam relief valve)		7 of the West (Main steam safety valve)		6 of the West (Main steam relief valve)		7 of the West (Main steam safety valve)	
	Release heights (m) (2)	40.7		38.8		40.7		38.8	
Receptors	Locations (1)	Intake				Inleak			
		TSC HVAC intake	TSC HVAC intake	TSC HVAC intake	TSC HVAC intake	Auxiliary Building HVAC Intake	Auxiliary Building HVAC Intake	Auxiliary Building HVAC Intake	Auxiliary Building HVAC Intake
		c of the North	c of the South	c of the North	c of the South	c of the North	c of the South	c of the North	c of the South
	Receptor heights (m) (2)	25.4	25.4	25.4	25.4	25.4	25.4	25.4	25.4
Horizontal distance Source to Receptor (m)(3)		67	62	70	63	67	62	70	63
Vertical distance (m) (3)		-15	-15	-13	-13	-15	-15	-13	-13
Straight distance (m) (3)		69	64	71	65	69	64	71	65
Direction Receptor to Source (degree) (4)		113	97	117	102	113	97	117	102
Lateral diffusion coefficient (m)		0	0	0	0	0	0	0	0
Vertical diffusion coefficient (m)		0	0	0	0	0	0	0	0
χ/Q (s/m^3) (6)	0-8 hr	1.7×10^{-3}				1.7×10^{-3}			
	8-24 hr	9.9×10^{-4}				9.9×10^{-4}			
	24-96 hr	6.3×10^{-4}				6.3×10^{-4}			
	96-720 hr	~~2.8×10^{-4}~~ 4.2×10^{-4}				~~2.8×10^{-4}~~ 4.2×10^{-4}			

DCD_02.03.04-9

Table 2.3.4-3 Combination of Sources and Receptors for Rod Ejection Accident Analysis (Sheet 11 of 11)

Accidents		Rod Ejection Accident							
		TSC							
Sources	Locations (1)	Main steam relief valve and safety valve releases							
		6 of the East (Main steam relief valve)		7 of the East (Main steam safety valve)		6 of the East (Main steam relief valve)		7 of the East (Main steam safety valve)	
	Release heights (m) (2)	40.7		38.8		40.7		38.8	
Receptors	Locations (1)	Intake				Inleak			
		TSC HVAC intake	TSC HVAC intake	TSC HVAC intake	TSC HVAC intake	Auxiliary Building HVAC Intake	Auxiliary Building HVAC Intake	Auxiliary Building HVAC Intake	Auxiliary Building HVAC Intake
		c of the North	c of the South	c of the North	c of the South	c of the North	c of the South	c of the North	c of the South
	Receptor heights (m) (2)	25.4	25.4	25.4	25.4	25.4	25.4	25.4	25.4
Horizontal distance Source to Receptor (m)(3)		83	79	85	80	83	79	85	80
Vertical distance (m) (3)		-15	-15	-13	-13	-15	-15	-13	-13
Straight distance (m) (3)		84	80	86	81	84	80	86	81
Direction Receptor to Source (degree) (4)		109	96	112	100	109	96	112	100
Lateral diffusion coefficient (m)		0	0	0	0	0	0	0	0
Vertical diffusion coefficient (m)		0	0	0	0	0	0	0	0
χ/Q (s/m^3) (6)	0-8 hr	1.7×10^{-3}				1.7×10^{-3}			
	8-24 hr	9.9×10^{-4}				9.9×10^{-4}			
	24-96 hr	6.3×10^{-4}				6.3×10^{-4}			
	96-720 hr	~~2.8×10^{-4}~~ 4.2×10^{-4}				~~2.8×10^{-4}~~ 4.2×10^{-4}			

DCD_02.03.04-9

Table 2.3.4-4 Combination of Sources and Receptors for Failure of Small Lines Carrying Primary Coolant Outside Containment Analyses (Sheet 1 of 2)

Accidents		Failure of Small Lines Carrying Primary Coolant Outside Containment					
		MCR					
Sources	Locations (1)	Plant vent					
		9					
	Release heights (m) (2)	69.9					
Receptors	Locations (1)	Intake		Inleak			
		MCR HVAC intake	MCR HVAC intake	Class 1E electrical room HVAC intake	Class 1E electrical room HVAC intake(7)	Class 1E electrical room HVAC intake	Class 1E electrical room HVAC intake(8)
		a of the East	a of the West	d of the North-East	d of the South-East	d of the North-West	d of the South-West
	Receptor heights (m) (2)	13.9	13.9	13.9	13.9	13.9	13.9
Horizontal distance Source to Receptor (m)(3)		68	53	66	68	51	53
Vertical distance (m) (3)		-56	-56	-56	-56	-56	-56
Straight distance (m) (3)		88	77	87	88	76	77
Direction Receptor to Source (degree) (4)		318	19	316	318	20	19
Lateral diffusion coefficient (m)		0	0	0	0	0	0
Vertical diffusion coefficient (m)		0	0	0	0	0	0
χ/Q (s/m^3) (6)	0-8 hr	1.1×10^{-3}		1.4×10^{-3}			
	8-24 hr	6.6×10^{-4}		8.0×10^{-4}			
	24-96 hr	4.2×10^{-4}		5.1×10^{-4}			
	96-720 hr	~~1.9×10^{-4}~~ 2.8×10^{-4}		~~2.2×10^{-4}~~ 3.3×10^{-4}			

DCD_02.03.04-9

Table 2.3.4-4 Combination of Sources and Receptors for Failure of Small Lines Carrying Primary Coolant Outside Containment Analyses (Sheet 2 of 2)

Accidents		Failure of Small Lines Carrying Primary Coolant Outside Containment						
		MCR			TSC			
Sources	Locations (1)	Plant vent			Plant vent			
		9			9			
	Release heights (m) (2)	69.9			69.9			
Receptors	Locations (1)	Inleak			Intake		inleak	
		Auxiliary building HVAC intake	Auxiliary building HVAC intake	Reactor building door	TSC HVAC intake	TSC HVAC intake	Auxiliary Building HVAC Intake	Auxiliary Building HVAC Intake
		c of the North	c of the South	b	c of the North	c of the South	c of the North	c of the South
	Receptor heights (m) (2)	25.4	25.4	10.0	25.4	25.4	25.4	25.4
Horizontal distance Source to Receptor (m)(3)		55	61	377	55	61	55	61
Vertical distance (m) (3)		-45	-45	-60	-45	-45	-45	-45
Straight distance (m) (3)		71	76	70	71	76	71	76
Direction Receptor to Source (degree) (4)		81	64	28	81	64	81	64
Lateral diffusion coefficient (m)		0	0	0	0	0	0	0
Vertical diffusion coefficient (m)		0	0	0	0	0	0	0
χ/Q (s/m^3) (6)	0-8 hr	1.4×10^{-3}			1.4×10^{-3}		1.4×10^{-3}	
	8-24 hr	8.0×10^{-4}			8.0×10^{-4}		8.0×10^{-4}	
	24-96 hr	5.1×10^{-4}			5.1×10^{-4}		5.1×10^{-4}	
	96-720 hr	~~2.2×10^{-4}~~ 3.3×10^{-4}			~~2.2×10^{-4}~~ 3.3×10^{-4}		~~2.2×10^{-4}~~ 3.3×10^{-4}	

DCD_02.03.04-9

Table 2.3.4-5 Combination of Sources and Receptors for Steam Generator Tube Rupture (SGTR) Analyses (Sheet 1 of 8)

Accidents		SGTR			
		MCR			
Sources	Locations (1)	Main steam relief valve and safety valve releases			
		6 of the East (Main steam relief valve)	7 of the East (Main steam safety valve)	6 of the West (Main steam relief valve)	7 of the West (Main steam safety valve)
	Release heights (m) (2)	40.7	38.8	40.7	38.8
Receptors	Locations (1)	Intake			
		MCR HVAC intake	MCR HVAC intake	MCR HVAC intake	MCR HVAC intake
		a of the East	a of the East	a of the West	a of the West
	Receptor heights (m) (2)	13.9	13.9	13.9	13.9
Horizontal distance Source to Receptor (m)(3)		29	24	29	24
Vertical distance (m) (3)		-27	-25	-27	-25
Straight distance (m) (3)		39	35	39	35
Direction Receptor to Source (degree) (4)		303	283	57	77
Lateral diffusion coefficient (m)		0	0	0	0
Vertical diffusion coefficient (m)		0	0	0	0
χ/Q (s/m^3) (6)	0-8 hr	5.3×10^{-3}			
	8-24 hr	3.1×10^{-3}			
	24-96 hr	2.0×10^{-3}			
	96-720 hr	~~8.7×10^{-4}~~ 1.3×10^{-3}			

DCD_02.03.04-9

Table 2.3.4-5 Combination of Sources and Receptors for Steam Generator Tube Rupture (SGTR) Analyses (Sheet 2 of 8)

Accidents		SGTR			
		MCR			
Sources	Locations (1)	Main steam relief valve and safety valve releases			
		6 of the West (Main steam relief valve)	7 of the West (Main steam safety valve)	6 of the East (Main steam relief valve)	7 of the East (Main steam safety valve)
	Release heights (m) (2)	40.7	38.8	40.7	38.8
Receptors	Locations (1)	Intake			
		MCR HVAC intake	MCR HVAC intake	MCR HVAC intake	MCR HVAC intake
		a of the East	a of the East	a of the West	a of the West
	Receptor heights (m) (2)	13.9	13.9	13.9	13.9
Horizontal distance Source to Receptor (m) (3)		43	41	43	41
Vertical distance (m) (3)		-27	-25	-27	-25
Straight distance (m) (3)		51	48	51	48
Direction Receptor to Source (degree) (4)		291	278	69	82
Lateral diffusion coefficient (m)		0	0	0	0
Vertical diffusion coefficient (m)		0	0	0	0
χ/Q (s/m^3) (6)	0-8 hr	5.3×10^{-3}			
	8-24 hr	3.1×10^{-3}			
	24-96 hr	2.0×10^{-3}			
	96-720 hr	~~8.7×10^{-4}~~ 1.3×10^{-3}			

DCD_02.03.04-9

Table 2.3.4-5 Combination of Sources and Receptors for Steam Generator Tube Rupture (SGTR) Analyses (Sheet 3 of 8)

Accidents		SGTR			
		MCR			
Sources	Locations (1)	Main steam relief valve and safety valve releases			
		6 of the East (Main steam relief valve)		7 of the East (Main steam safety valve)	
	Release heights (m) (2)	40.7		38.8	
Receptors	Locations (1)	Inleak			
		Class 1E electrical room HVAC intake	Class 1E electrical room HVAC intake(7)	Class 1E electrical room HVAC intake	Class 1E electrical room HVAC intake(7)
		d of the North-East	d of the South-East	d of the North-East	d of the South-East
	Receptor heights (m) (2)	13.9	13.9	13.9	13.9
Horizontal distance Source to Receptor (m)(3)		27	29	24	24
Vertical distance (m) (3)		-27	-27	-25	-25
Straight distance (m) (3)		38	39	35	35
Direction Receptor to Source (degree) (4)		299	303	277	283
Lateral diffusion coefficient (m)		0	0	0	0
Vertical diffusion coefficient (m)		0	0	0	0
χ/Q (s/m^3) (6)	0-8 hr	5.3×10^{-3}			
	8-24 hr	3.1×10^{-3}			
	24-96 hr	2.0×10^{-3}			
	96-720 hr	~~8.7×10^{-4}~~ 1.3×10^{-3}			

DCD_02.03.04-9

Table 2.3.4-5 Combination of Sources and Receptors for Steam Generator Tube Rupture (SGTR) Analyses (Sheet 4 of 8)

Accidents		SGTR					
		MCR					
Sources	Locations (1)	Main steam relief valve and safety valve releases					
		6 of the West (Main steam relief valve)			7 of the West (Main steam safety valve)		
	Release heights (m) (2)	40.7			38.8		
Receptors	Locations (1)	Inleak					
		Class 1E electrical room HVAC intake	Class 1E electrical room HVAC intake(8)	Reactor building door	Class 1E electrical room HVAC intake	Class 1E electrical room HVAC intake(8)	Reactor building door
		d of the North-West	d of the South-West	b	d of the North-West	d of the South-West	b
	Receptor heights (m) (2)	13.9	13.9	10.0	13.9	13.9	10.0
Horizontal distance Source to Receptor (m)(3)		27	29	24	24	24	24
Vertical distance (m) (3)		-27	-27	-30	-25	-25	-29
Straight distance (m) (3)		38	39	39	35	35	38
Direction Receptor to Source (degree) (4)		61	57	88	83	77	101
Lateral diffusion coefficient (m)		0	0	0	0	0	0
Vertical diffusion coefficient (m)		0	0	0	0	0	0
χ/Q (s/m^3) (6)	0-8 hr	5.3×10^{-3}					
	8-24 hr	3.1×10^{-3}					
	24-96 hr	2.0×10^{-3}					
	96-720 hr	~~8.7×10^{-4}~~ 1.3×10^{-3}					

DCD_02.03.04-9

Table 2.3.4-5 Combination of Sources and Receptors for Steam Generator Tube Rupture (SGTR) Analyses (Sheet 5 of 8)

Accidents		SGTR			
		MCR			
Sources	Locations (1)	Main steam relief valve and safety valve releases			
		6 of the West (Main steam relief valve)		7 of the West (Main steam safety valve)	
	Release heights (m) (2)	40.7		38.8	
Receptors	Locations (1)	Inleak			
		Class 1E electrical room HVAC intake	Class 1E electrical room HVAC intake(7)	Class 1E electrical room HVAC intake	Class 1E electrical room HVAC intake(7)
		d of the North-East	d of the South-East	d of the North-East	d of the South-East
	Receptor heights (m) (2)	13.9	13.9	13.9	13.9
Horizontal distance Source to Receptor (m)(3)		42	43	41	41
Vertical distance (m) (3)		-27	-27	-25	-25
Straight distance (m) (3)		50	51	47	48
Direction Receptor to Source (degree) (4)		288	291	274	278
Lateral diffusion coefficient (m)		0	0	0	0
Vertical diffusion coefficient (m)		0	0	0	0
χ/Q (s/m^3) (6)	0-8 hr	5.3×10^{-3}			
	8-24 hr	3.1×10^{-3}			
	24-96 hr	2.0×10^{-3}			
	96-720 hr	~~8.7×10^{-4}~~ 1.3×10^{-3}			

DCD_02.03.04-9

Table 2.3.4-5 Combination of Sources and Receptors for Steam Generator Tube Rupture (SGTR) Analyses (Sheet 6 of 8)

Accidents		SGTR					
		MCR					
Sources	Locations (1)	6 of the East (Main steam relief valve)			7 of the East (Main steam safety valve)		
	Release heights (m) (2)	40.7			38.8		
Receptors	Locations (1)	Inleak					
		Class 1E electrical room HVAC intake	Class 1E electrical room HVAC intake(8)	Reactor building door	Class 1E electrical room HVAC intake	Class 1E electrical room HVAC intake(8)	Reactor building door
		d of the North-West	d of the South-West	b	d of the North-West	d of the South-West	b
	Receptor heights (m) (2)	13.9	13.9	10.0	13.9	13.9	10.0
Horizontal distance Source to Receptor (m)(3)		42	43	41	41	41	41
Vertical distance (m) (3)		-27	-27	-30	-25	-25	-29
Straight distance (m) (3)		50	51	51	47	48	50
Direction Receptor to Source (degree) (4)		72	69	89	86	82	96
Lateral diffusion coefficient (m)		0	0	0	0	0	0
Vertical diffusion coefficient (m)		0	0	0	0	0	0
χ/Q (s/m^3) (6)	0-8 hr	5.3×10^{-3}					
	8-24 hr	3.1×10^{-3}					
	24-96 hr	2.0×10^{-3}					
	96-720 hr	~~8.7×10^{-4}~~ 1.3×10^{-3}					

DCD_02.03.04-9

Table 2.3.4-5 Combination of Sources and Receptors for Steam Generator Tube Rupture (SGTR) Analyses (Sheet 7 of 8)

Accidents		SGTR							
		TSC							
Sources	Locations (1)	Main steam relief valve and safety valve releases							
		6 of the West (Main steam relief valve)		7 of the West (Main steam safety valve)		6 of the West (Main steam relief valve)		7 of the West (Main steam safety valve)	
	Release heights (m) (2)	40.7		38.8		40.7		38.8	
Receptors	Locations (1)	Intake				Inleak			
		TSC HVAC intake	TSC HVAC intake	TSC HVAC intake	TSC HVAC intake	Auxiliary building HVAC intake	Auxiliary building HVAC intake	Auxiliary building HVAC intake	Auxiliary building HVAC intake
		c of the North	c of the South	c of the North	c of the South	c of the North	c of the South	c of the North	c of the South
	Receptor heights (m) (2)	25.4	25.4	25.4	25.4	25.4	25.4	25.4	25.4
Horizontal distance Source to Receptor (m)(3)		67	63	70	63	67	63	70	63
Vertical distance (m) (3)		-15	-15	-13	-13	-15	-15	-13	-13
Straight distance (m) (3)		69	64	71	65	69	64	71	65
Direction Receptor to Source (degree) (4)		113	97	117	102	113	97	117	102
Lateral diffusion coefficient (m)		0	0	0	0	0	0	0	0
Vertical diffusion coefficient (m)		0	0	0	0	0	0	0	0
χ/Q (s/m^3) (6)	0-8 hr	1.7×10^{-3}				1.7×10^{-3}			
	8-24 hr	9.9×10^{-4}				9.9×10^{-4}			
	24-96 hr	6.3×10^{-4}				6.3×10^{-4}			
	96-720 hr	~~2.8×10^{-4}~~ 4.2×10^{-4}				~~2.8×10^{-4}~~ 4.2×10^{-4}			

DCD_02.03.04-9

Table 2.3.4-5 Combination of Sources and Receptors for Steam Generator Tube Rupture (SGTR) Analyses (Sheet 8 of 8)

Accidents		SGTR							
		TSC							
Sources	Locations (1)	Main steam relief valve and safety valve releases							
		6 of the East (Main steam relief valve)		7 of the East (Main steam safety valve)		6 of the East (Main steam relief valve)		7 of the East (Main steam safety valve)	
	Release heights (m) (2)	40.7		38.8		40.7		38.8	
Receptors	Locations (1)	Intake				Inleak			
		TSC HVAC intake	TSC HVAC intake	TSC HVAC intake	TSC HVAC intake	Auxiliary building HVAC intake	Auxiliary building HVAC intake	Auxiliary building HVAC intake	Auxiliary building HVAC intake
		c of the North	c of the South	c of the North	c of the South	c of the North	c of the South	c of the North	c of the South
	Receptor heights (m) (2)	25.4	25.4	25.4	25.4	25.4	25.4	25.4	25.4
Horizontal distance Source to Receptor (m)(3)		83	79	85	80	83	79	85	80
Vertical distance (m) (3)		-15	-15	-13	-13	-15	-15	-13	-13
Straight distance (m) (3)		84	80	86	81	84	80	86	81
Direction Receptor to Source (degree) (4)		109	96	112	100	109	96	112	100
Lateral diffusion coefficient (m)		0	0	0	0	0	0	0	0
Vertical diffusion coefficient (m)		0	0	0	0	0	0	0	0
χ/Q (s/m^3) (6)	0-8 hr	1.7×10^{-3}				1.7×10^{-3}			
	8-24 hr	9.9×10^{-4}				9.9×10^{-4}			
	24-96 hr	6.3×10^{-4}				6.3×10^{-4}			
	96-720 hr	~~2.8×10^{-4}~~ 4.2×10^{-4}				~~2.8×10^{-4}~~ 4.2×10^{-4}			

DCD_02.03.04-9

Table 2.3.4-6 Combination of Sources and Receptors for LOCA Analysis (Sheet 1 of 3)

Accidents		LOCA						
		MCR						
Sources	Locations (1)	Plant vent						
		9						
	Release heights (m) (2)	69.9						
Receptors	Locations (1)	intake		Inleak				
		MCR HVAC intake	MCR HVAC intake	Class 1E electrical room HVAC intake	Class 1E electrical room HVAC intake(7)	Class 1E electrical room HVAC intake	Class 1E electrical room HVAC intake(8)	Reactor building door
		a of the East	a of the West	d of the North-East	d of the South-East	d of the North-West	d of the South-West	b
	Receptor heights (m) (2)	13.9	13.9	13.9	13.9	13.9	13.9	10.0
Horizontal distance Source to Receptor (m)(3)		68	53	66	68	51	53	37
Vertical distance (m) (3)		-56	-56	-56	-56	-56	-56	-60
Straight distance (m) (3)		88	77	87	88	76	77	70
Direction Receptor to Source (degree) (4)		318	19	316	318	20	19	28
Lateral diffusion coefficient (m)		0	0	0	0	0	0	0
Vertical diffusion coefficient (m)		0	0	0	0	0	0	0
χ/Q (s/m^3) (6)	0-8 hr	1.1×10^{-3}		1.3×10^{-3}				
	8-24 hr	6.6×10^{-4}		7.8×10^{-4}				
	24-96 hr	4.2×10^{-4}		4.9×10^{-4}				
	96-720 hr	~~1.9×10^{-4}~~ 2.8×10^{-4}		~~2.2×10^{-4}~~ 3.3×10^{-4}				

DCD_02.03.04-9

Table 2.3.4-6 Combination of Sources and Receptors for LOCA Analysis (Sheet 2 of 3)

Accidents		LOCA						
		MCR						
Sources	Locations (1)	Ground level containment release point (5)						
		2 of the East	2 of the West	1 of the East	2 of the East	1 of the West	2 of the West	4
	Release heights (m) (2)	49.5						
Receptors	Locations (1)	Intake		Inleak				
		MCR HVAC intake	MCR HVAC intake	Class 1E electrical room HVAC intake	Class 1E electrical room HVAC intake(7)	Class 1E electrical room HVAC intake	Class 1E electrical room HVAC intake(8)	Reactor building door
		a of the East	a of the West	d of the North-East	d of the South-East	d of the North-West	d of the South-West	b
	Receptor heights (m) (2)	13.9	13.9	13.9	13.9	13.9	13.9	10.0
Horizontal distance Source to Receptor (m)(3)		29	29	27	29	27	29	16
Vertical distance (m) (3)		-35	-35	-35	-35	-35	-35	-39
Straight distance (m) (3)		46	46	44	46	44	46	43
Direction Receptor to Source (degree) (4)		322	38	320	322	40	38	53
Lateral diffusion coefficient (m)		7.98	7.98	7.98	7.98	7.98	7.98	7.98
Vertical diffusion coefficient (m)		5.03	5.03	5.03	5.03	5.03	5.03	5.03
χ/Q (s/m^3) (6)	0-8 hr	2.2×10^{-3}		2.4×10^{-3}				
	8-24 hr	1.3×10^{-3}		1.4×10^{-3}				
	24-96 hr	8.3×10^{-4}		9.1×10^{-4}				
	96-720 hr	~~3.6×10^{-4}~~ 5.5×10^{-4}		~~4.0×10^{-4}~~ 6.0×10^{-4}				

DCD_02.03.04-9

Table 2.3.4-6 Combination of Sources and Receptors for LOCA Analysis (Sheet 3 of 3)

Accidents		LOCA							
		TSC							
Sources	Locations (1)	Plant vent				Ground level containment release point (5)			
		9				3 of the North	3 of the South	3 of the North	3 of the South
	Release heights (m) (2)	69.9				49.5			
Receptors	Locations (1)	Intake		inleak		Intake		inleak	
		TSC HVAC intake	TSC HVAC intake	~~TSC HVAC intake~~ Auxiliary building HVAC intake	~~TSC HVAC intake~~ Auxiliary building HVAC intake	TSC HVAC intake	TSC HVAC intake	~~TSC HVAC intake~~ Auxiliary building HVAC intake	~~TSC HVAC intake~~ Auxiliary building HVAC intake
		c of the North	c of the South	c of the North	c of the South	c of the North	c of the South	c of the North	c of the South
	Receptor heights (m) (2)	25.4	25.4	25.4	25.4	25.4	25.4	25.4	25.4
Horizontal distance Source to Receptor (m)(3)		55	61	55	61	46	48	46	48
Vertical distance (m) (3)		-45	-45	-45	-45	-24	-24	-24	-24
Straight distance (m) (3)		71	76	71	76	52	54	52	54
Direction Receptor to Source (degree) (4)		81	64	81	64	91	76	91	76
Lateral diffusion coefficient (m)		0	0	0	0	7.98	7.98	7.98	7.98
Vertical diffusion coefficient (m)		0	0	0	0	5.03	5.03	5.03	5.03
χ/Q (s/m^3) (6)	0-8 hr	1.4×10^{-3}		1.4×10^{-3}		1.9×10^{-3}		1.9×10^{-3}	
	8-24 hr	8.0×10^{-4}		8.0×10^{-4}		1.1×10^{-3}		1.1×10^{-3}	
	24-96 hr	5.1×10^{-4}		5.1×10^{-4}		7.2×10^{-4}		7.2×10^{-4}	
	96-720 hr	~~2.2×10^{-4}~~ 3.3×10^{-4}		~~2.2×10^{-4}~~ 3.3×10^{-4}		~~3.2×10^{-4}~~ 4.8×10^{-4}		~~3.2×10^{-4}~~ 4.8×10^{-4}	

DCD_02.03.04-9

Table 2.3.4-7 Combination of Sources and Receptors for Fuel Handling Accident Analysis (Sheet 1 of 3)

Accidents		Fuel handling accident in the containment								
		MCR								
Sources	Locations (1)	Plant vent								
		9								
	Release heights (m) (2)	69.9								
Receptors	Locations (1)	Intake		Inleak						
		MCR HVAC intake	MCR HVAC intake	Class 1E electrical room HVAC intake	Class 1E electrical room HVAC intake(7)	Class 1E electrical room HVAC intake	Class 1E electrical room HVAC intake(8)	Auxiliary building HVAC intake	Auxiliary building HVAC intake	Reactor building door
		a of the East	a of the West	d of the North-East	d of the South-East	d of the North-West	d of the South-West	c of the North	c of the South	b
	Receptor heights (m) (2)	13.9	13.9	13.9	13.9	13.9	13.9	25.4	25.4	10.0
Horizontal distance Source to Receptor (m)(3)		68	53	66	68	51	53	55	61	37
Vertical distance (m) (3)		-56	-56	-56	-56	-56	-56	-45	-45	-60
Straight distance (m) (3)		88	77	87	88	76	77	71	76	70
Direction Receptor to Source (degree) (4)		318	19	316	318	20	19	81	64	28
Lateral diffusion coefficient (m)		0	0	0	0	0	0	0	0	0
Vertical diffusion coefficient (m)		0	0	0	0	0	0	0	0	0
χ/Q (s/m^3) (6)	0-8 hr	1.1×10^{-3}		1.4×10^{-3}						
	8-24 hr	6.6×10^{-4}		8.0×10^{-4}						
	24-96 hr	4.2×10^{-4}		5.1×10^{-4}						
	96-720 hr	~~1.9×10^{-4}~~ 2.8×10^{-4}		~~2.2×10^{-4}~~ 3.3×10^{-4}						

DCD_02.03.04-9

Table 2.3.4-7 Combination of Sources and Receptors for Fuel Handling Accident Analysis (Sheet 2 of 3)

Accidents		Fuel handling accident in the fuel handling area								
		MCR								
Sources	Locations (1)	Fuel handling area								
		8								
	Release heights (m) (2)	5.9								
Receptors	Locations (1)	Intake		Inleak						
		MCR HVAC intake	MCR HVAC intake	Class 1E electrical room HVAC intake	Class 1E electrical room HVAC intake(7)	Class 1E electrical room HVAC intake	Class 1E electrical room HVAC intake(8)	Auxiliary building HVAC intake	Auxiliary building HVAC intake	Reactor building door
		a of the East	a of the West	d of the North-East	d of the South-East	d of the North-West	d of the South-West	c of the North	c of the South	b
	Receptor heights (m) (2)	13.9	13.9	13.9	13.9	13.9	13.9	23.3	23.3	7.4
Horizontal distance Source to Receptor (m)(3)		78	104	76	78	102	104	112	119	91
Vertical distance (m) (3)		8	8	8	8	8	8	17	17	2
Straight distance (m) (3)		79	104	76	79	102	104	113	120	91
Direction Receptor to Source (degree) (4)		2	41	2	2	42	41	71	63	48
Lateral diffusion coefficient (m)		0	0	0	0	0	0	0	0	0
Vertical diffusion coefficient (m)		0	0	0	0	0	0	0	0	0
χ/Q (s/m^3) (6)	0-8 hr	1.1×10^{-3}		1.1×10^{-3}						
	8-24 hr	6.4×10^{-4}		6.7×10^{-4}						
	24-96 hr	4.1×10^{-4}		4.3×10^{-4}						
	96-720 hr	~~1.8×10^{-4}~~ 2.7×10^{-4}		~~1.9×10^{-4}~~ 2.8×10^{-4}						

DCD_02.03.04-9

Table 2.3.4-7 Combination of Sources and Receptors for Fuel Handling Accident Analysis (Sheet 3 of 3)

Accidents		Fuel handling accident in the containment				Fuel handling accident in the fuel handling area			
		TSC							
Sources	Locations (1)	Plant vent				Fuel handling area			
		9				8			
	Release heights (m) (2)	69.9				5.9			
Receptors	Locations (1)	Intake		inleak		Intake		inleak	
		TSC HVAC intake	TSC HVAC intake	Auxiliary Building HVAC Intake	Auxiliary Building HVAC Intake	TSC HVAC intake	TSC HVAC intake	Auxiliary Building HVAC Intake	Auxiliary Building HVAC Intake
		c of the North	c of the South	c of the North	c of the South	c of the North	c of the South	c of the North	c of the South
	Receptor heights (m) (2)	25.4	25.4	25.4	25.4	23.3	23.3	23.3	23.3
Horizontal distance Source to Receptor (m)(3)		55	61	55	61	112	119	112	119
Vertical distance (m) (3)		-45	-45	-45	-45	17	17	17	17
Straight distance (m) (3)		71	76	71	76	113	120	113	120
Direction Receptor to Source (degree) (4)		81	64	81	64	71	63	71	63
Lateral diffusion coefficient (m)		0	0	0	0	0	0	0	0
Vertical diffusion coefficient (m)		0	0	0	0	0	0	0	0
χ/Q (s/m^3) (6)	0-8 hr	1.4×10^{-3}		1.4×10^{-3}		6.7×10^{-4}		6.7×10^{-4}	
	8-24 hr	8.0×10^{-4}		8.0×10^{-4}		3.9×10^{-4}		3.9×10^{-4}	
	24-96 hr	5.1×10^{-4}		5.1×10^{-4}		2.5×10^{-4}		2.5×10^{-4}	
	96-720 hr	~~2.2×10^{-4}~~ 3.3×10^{-4}		~~2.2×10^{-4}~~ 3.3×10^{-4}		~~1.1×10^{-4}~~ 1.7×10^{-4}		~~1.1×10^{-4}~~ 1.7×10^{-4}	

DCD_02.03.04-9

NOTES for Tables 2.3.4-1 through 2.3.4-7:

(1) The inside of a parenthesis shows the source locations and receptor locations of the Figure 2.3-2

(2) The height is from the ground level. The ground level is El. 2'-7"

(3) These values are the distance differences in a unit of meter from the source to the receptor. After the distance differences are calculated from the locations of the source and the receptor in a unit of feet, the resulted distance differences are rounded off. Those rounded numbers of the distance differences are converted to those in a unit of meter. Therefore, note that these values are a bit different from the difference between the source height and receptor height in a unit of meter indicated in the above (2), because the source height and receptor height in a unit of meter are directly converted from those in a unit of feet, without any calculation in a unit of feet.

(4) The angle of receptors from Plant North centering on sources (Direction increases in a clockwise fashion based on the Plant North, i.e. The Plant North is 0 degree.)

(5) Area source, which is determined from the method in Sections C.3.2.4.4 and C.3.2.4.5 of RG 1.194.

(6) - These χ/Q values are for US-APWR DCD Chapter15.

~~- The χ/Q values of MCR can't be directly calculated by ARCON96 itself because there is no site specific meteorological data in the stage of the DCD. Therefore, the diffusion equations described in ARCON96 (e.g. Revision 1 to NUREG-6331) are used for calculating the χ/Q values of MCR, together with the meteorological condition based on RG 1.194 (e.g., F stability with wind speeds of 1.0 m/s) and multiplier. According to the setting method of these χ/Q values, the closer the distance the more conservative it becomes. It is not used the ARCON96 directly in DCD.~~

- For each sources, the χ/Q values for inleakage and intake are set as those of the path with the shortest straight distances, respectively.

(7) Class 1E electrical room HVAC intake (south – east) and MCR HVAC Intake (east) are same intake duct (i.e. they are same location).

(8) Class 1E electrical room HVAC intake (south – west) and MCR HVAC Intake (west) are same intake duct (i.e. they are same location).

Chapter 3

Page	Location (e.g., subsection with paragraph/ sentence/ item, table with row/column, or figure)	Description of Change
3.1-6	Subsection 3.1.2.4.1 1st Paragraph 2nd Sentence	Change: "…systems, RWMS, and other auxiliary systems." to "…systems, radioactive waste management systems (RWMS), and other auxiliary systems." Reason: Define acronym when first used.
3.1-34	Subsection 3.1.5.6 1st Paragraph Item 2	Change: "2) One locked closed isolation valve inside and one locked closed isolation valve outside the containment; or" to "2) One automatic isolation valve inside and one locked closed isolation valve outside the containment; or" Reason: Correct typographical error [RAI 553-4357, Question 06.02.04-54]
3.1-37	Subsection 3.1.6.1.1 3rd Sentence	Change: "The radioactive waste management systems (RWMS) are designed…" to "The RWMS are designed…" Reason: Acronym defined earlier.
3.2-6	Subsection 3.2.2 Next-to-last Paragraph 2nd Sentence	Change: "The US-APWR SSCs are classified in equipment Classes 1 to 7 with respect to the Quality Group Classification." to "The US-APWR SSCs are classified in equipment Classes 1 to 10 with respect to the Quality Group Classification." Reason: Editorial correction
3.2-71	Table 3.2-2 Sheet 55 Item 50 1st Row, 6th Column	Change: "4" to "5" Reason: Correct Codes and Standards. [RAI 567-4326, Question 09.02.02-46]
3.3-7	Subsection 3.3.2.3 3rd Paragraph 4th Last Sentence	Change: "This ensures that there is no overall failure of the T/B, due to tornado wind and/or atmospheric pressure change, which could affect the ability of adjacent buildings and structures to perform their intended safety functions. Localized failures of wind girts and other exposed SSCs are permitted. However, these items are designed to remain attached to the structure. Alternately, if such items could, they are reviewed to ensure that no new missiles are generated that are not enveloped by the missiles addressed in Subsection 3.5.1.4." to "This ensures that there is no overall failure of the T/B, due to maximum tornado wind and/or atmospheric pressure change as defined in

Page	Location (e.g., subsection with paragraph/ sentence/ item, table with row/column, or figure)	Description of Change
		Table 2.0-1, which could affect the ability of adjacent buildings and structures to perform their intended safety functions. Localized failures of wind girts and other exposed SSCs are permitted. However, these items are designed to remain attached to the structure. Any items (including the T/B siding) which might become dislodged and become missiles under the maximum tornado conditions do not warrant further evaluation because they are considered to be enveloped by the missiles addressed in Subsection 3.5.1.4. The use of tornado-generated missile spectrum described in Subsection 3.5.1.4, which is consistent with the most severe missile spectrum as identified for Region I in RG 1.76 Revision 1, provides assurance that the necessary SSCs will be available to mitigate the potential effects of a tornado on plant safety." Reason: To clarify that any localized failures of site-specific structures will not create any tornado-generated missiles that are not enveloped by the missiles addressed in Subsection 3.5.1.4.
3.3-7	Subsection 3.3.2.3 3rd Paragraph 1st Sentence	Change: "The AC/B is not designed for a tornado and consequently it could potentially fail due to design basis tornado loading, including loss of its siding." to "The AC/B is not designed for a tornado and consequently it could potentially fail due to design basis tornado loading." Reason: The AC/B is a reinforced concrete structure that does not contain metal siding.
3.5-2	Section 3.5 3rd Paragraph Item 12	Change: "PCCV and other safety related structures…" to "PCCV and other safety-related structures…" Reason: Corrected hyphen.
3.5-8	Subsection 3.5.1.2.1 3rd Paragraph 4th Bullet	Change: "… or by movement of the reactor coolant loops." to "… or by movement of the reactor coolant loops (RCLs)." Reason: Define acronym when first used.
3.6-6	Subsection 3.6.1.2.2.2 2nd Paragraph 2nd Sentence	Change: "The reactor coolant loops (RCLs) are…" to "The RCLs are…" Reason: Acronym defined and used earlier.

Page	Location (e.g., subsection with paragraph/ sentence/ item, table with row/column, or figure)	Description of Change
3.6-35	Subsection 3.6.5 Reference 3.6-21	Change: "Reactor Coolant Pressure Boundary Leakage Detection Systems. Regulatory Guide 1.45, U.S. Nuclear Regulatory Commission, Washington, DC, May 1973." to "Guidance on Monitoring and Responding to Reactor Coolant System Leakage. Regulatory Guide 1.45, Rev. 1, U.S. Nuclear Regulatory Commission, Washington, DC, May 2008." Reason: Correct the title and revision of reference. [RAI 549-4390, Question 05.02.05-12]
3.7-54	Subsection 3.7.4.1 5th Paragraph Last Sentence	Change: "The site-specific OBE is exceeded only if all of the following three conditions identified in RG 1.166 (Reference 3.7-41) are met:" to "When free-field instrumentation is used, the site-specific OBE is exceeded and plant shutdown is required in accordance with the criteria of RG 1.166 (Reference 3.7-41), if the first of the following three conditions in combination with either the second or third conditions are met:" Reason: Clarified the proposed shutdown conditions for OBE exceedance criteria. [RAI 538-4320 Question 03.07.04-03]
3.7-54	Subsection 3.7.4.1 6th Paragraph	Change: "The shutdown of the plant is required only if all three of the above conditions are met and any of the 5% damping ARS obtained from the measurements of the instructure accelerations exceed the OBE spectra at the corresponding location. If the free-field ground motion is not measured, it is conservatively assumed that the checks of CAV and free-field ground accelerations and velocities are exceeded." to "If free-field instrumentation is not used, the criteria of RG 1.166 Appendix A are used for OBE exceedance checks, it is assumed that the checks of CAV and free field ground spectra are exceeded, and shutdown of the plant is required if the 5% damping spectra are exceeded at any of the in-structure instrumentation." Reason: Clarified the proposed shutdown conditions for OBE exceedance criteria. [RAI 538-4320 Question 03.07.04-03]
3.9-29	Subsection 3.9.2.5.1 8th Paragraph 1st Sentence	Change: "The reactor internals seismic input can either be from in-structure response spectra or in-structure time-history accelerations…" to "The reactor internals seismic input can either be from ISRS or in-structure time-history accelerations…"

Page	Location (e.g., subsection with paragraph/ sentence/ item, table with row/column, or figure)	Description of Change
		Reason: Editorial (Used acronym)
3.9-90	Subsection 3.9.10 Reference 3.9-2	Change: “ANS N5.1.1-1983” to “ANS N51.1-1993” Reason: Correct typographical error
3.12-11	Subsection 3.12.5.3.4 2nd Paragraph 3rd Sentence	Change: “Tables 3.12-2, 3.12-3, and 3.12.-4 identify…” to “Tables 3.12-2, 3.12-3, and 3.12-4 identify…” Reason: Correct typographical error

3.1.2.3.1 Discussion

Total reactor power oscillations of the fundamental mode are inherently eliminated by negative Doppler and negative MTC.

Power distribution oscillations due to xenon spatial effects in the radial and azimuthal overtone modes are heavily damped due to the inherent design and due to the negative doppler and negative MTC.

Power distribution oscillations, due to xenon spatial effects may occur in the axial first overtone mode. Assurance that fuel design limits are not exceeded by axial xenon induced power oscillations is provided by RT functions, using the measured axial flux difference as an input.

If necessary to maintain axial flux difference within the limits of the Technical Specifications/Chapter 16 (i.e., flux difference that are alarmed to the operator and are within the flux difference trip setpoints), the operator can suppress axial xenon oscillations by control rod motions, and/or temporary power reductions.

Power distribution oscillations, due to xenon spatial effects in axial modes higher than the first overtone are heavily damped due to the inherent design and due to the negative Doppler coefficient of reactivity.

The stability of the core against xenon-induced power distribution oscillations and the functional requirements of instrumentation for monitoring are discussed in Chapter 4. Details of the instrumentation design and logic are discussed in Chapter 7.

3.1.2.4 Criterion 13 – Instrumentation and Control

> Instrumentation shall be provided to monitor variables and systems over their anticipated ranges for normal operation, for anticipated operational occurrences, and for accident conditions as appropriate to assure adequate safety, including those variables and systems that can affect the fission process, the integrity of the reactor core, the reactor coolant pressure boundary, and the containment and its associated systems. Appropriate controls shall be provided to maintain these variables and systems within prescribed operating ranges.

3.1.2.4.1 Discussion

Instrumentation and controls are provided to monitor and control neutron flux, control rod position, fluid temperatures, pressures, flows, and levels, to assure that adequate plant safety can be maintained. Instrumentation is provided in the reactor coolant system (RCS), steam and power conversion system, containment, engineered safety feature (ESF) systems, radioactive waste management systems (RWMS), and other auxiliary systems. Parameters that must be provided for operator use under normal operating and accident conditions are provided in proximity to the controls so that the operator can maintain the indicated parameters within their proper ranges. Chapter 18 describes the criteria for human factors engineering for the layout, displays, and controls of such parameters.

tested to assure operability. For those penetrations that are normally open and are required to close, these penetrations use remote operated valves for isolation that close automatically on a containment isolation signal. The containment isolation signal is generated and actuated on by the PSMS.

Secondary system piping inside the containment is considered an extension of the containment boundary, as described in Subsection 6.2.4. The isolation valve arrangements are discussed in Chapter 6.

Piping that penetrates the containment has been equipped with test connections and test vents or has other provisions to allow periodic leak-rate testing to assure that leakage is within the acceptable limit as defined by the technical specifications/Chapter 16 consistent with 10 CFR 50, Appendix J (Reference 3.1-13), as described in Chapter 6.

The fuel transfer tube is not classified as a fluid system penetration. The blind flange and the portion of the transfer tube inside the containment are an extension of the containment boundary. The blind flange isolates the transfer tube at all times, except when the reactor is shutdown for refueling. This assembly is a penetration in the same sense as are equipment hatches and personnel locks.

3.1.5.6 Criterion 55 – Reactor Coolant Pressure Boundary Penetrating Containment

Each line that is part of the reactor coolant pressure boundary and that penetrates the primary reactor containment shall be provided with containment isolation valves as follows, unless it can be demonstrated that the containment isolation provisions for a specific class of lines, such as instrument lines, are acceptable on some other defined basis:

1) One locked closed isolation valve inside and one locked closed isolation valve outside the containment; or
2) One automatic ~~locked closed~~ isolation valve inside and one locked closed isolation valve outside the containment; or
3) One locked closed isolation valve inside and one automatic isolation valve outside the containment. A simple check valve may not be used as the automatic isolation valve outside containment; or
4) One automatic isolation valve inside and one automatic isolation valve outside the containment. A simple check valve may not be used as the automatic isolation valve outside the containment.

Isolation valves outside the containment shall be located as close to the containment as practical and, upon loss of actuating power, automatic isolation valves shall be designed to take the position that provides greater safety.

Other appropriate requirements to minimize the probability or consequences of an accidental rupture of these lines or of lines connected to them shall be provided, as necessary, to assure adequate safety. Determination of the appropriateness of these requirements, such

produced during normal reactor operation, including AOOs. The ~~radioactive waste management systems (~~RWMS~~)~~ are designed to minimize the potential for an inadvertent release of radioactivity from the facility and to assure that the discharge of radioactive wastes is maintained as low as practicable below the regulatory limits of 10 CFR 20 (Reference 3.1-15), and below the guidelines of 10 CFR 50, Appendix I (Reference 3.1-16), during normal operation. The gaseous and liquid RWMS have adequate capacity and redundancy to meet discharge concentration limits of 10 CFR 20 (Reference 3.1-15) during periods of design-basis fuel leakage. The RWMS, the design criteria, and the amounts of estimated releases of radioactive effluents to the environment are described in Chapter 11. The radiation monitoring of discharge paths of the gaseous and liquid radwaste processing systems and isolation on high radiation is also discussed in Chapter 11.

3.1.6.2 Criterion 61 – Fuel Storage and Handling and Radioactivity Control

> The fuel storage and handling, radioactive waste, and other systems which may contain radioactivity shall be designed to assure adequate safety under normal and postulated accident conditions. These systems shall be designed (1) with a capability to permit appropriate periodic inspection and testing of components important to safety, (2) with suitable shielding for radiation protection, (3) with appropriate containment, confinement, and filtering systems, (4) with a residual heat removal capability having reliability and testability that reflects the importance to safety of decay heat and other residual heat removal, and (5) to prevent significant reduction in fuel storage coolant inventory under accident conditions.

3.1.6.2.1 Discussion

The spent fuel pit cooling and purification system (SFPCS), fuel handling and radioactive waste systems are designed to cool and purify spent fuel pit (SFP) water, to supply borated water, provide shielding, and assure safety under normal and postulated accident conditions. The SFPCS is a two-train system that consists of a closed circuit that includes: heat exchangers, pumps, demineralizers, and filters. The subsystem is designed to run on Class 1E power during a loss of offsite power.

The SFPCS is designed to maintain the water level of the SFP, to prevent uncovering of the stored fuel from leakage due to failure of the piping, and to assure radiation shielding. Additionally, water may be added from several other sources, if required (Subsection 9.1.3). Adequate shielding is provided as described in Chapter 12. Radiation monitoring is provided as discussed in Chapters 11 and 12.

Normal heating ventilation and air conditioning (HVAC) system for the SFP area and purification and cooling system is provided by the auxiliary building (A/B) HVAC System. This HVAC System is described in Chapter 9.

The SFP cooling subsystem provides cooling to remove residual heat from the fuel stored in the SFP. The SFPCS is designed with redundancy, testability, and inspection capability. SSCs are designed and located so that appropriate periodic inspection and testing may be performed.

components are designated in RG 1.26 (Reference 3.2-13) as Quality Group A. In addition, RG 1.26 (Reference 3.2-13) identifies, on a functional basis, water- and steam-containing components of those safety-related systems that are designated as Quality Groups B and C. Quality Group D applies to non safety-related water- and steam-containing components of systems.

NRC Generic Letter 90-06 (Reference 3.2-15) is used as guidance for classification of power operated relief valves (PORVs), associated components, and block valves. These components are classified as safety-related for performing safety functions, such as, the mitigation of design-basis steam generator tube rupture accident, low temperature overpressure protection of the RV, and/or plant cooldown. The safety-related classification addresses the redundant and diverse control systems designed to seismic category I criteria. These PORVs and block valves are included in a quality assurance program that is in compliance with 10 CFR 50, Appendix B (Reference 3.2-8), as identified in Table 3.2-2.

Additional safety-related systems considered that are not identified in RG 1.26 (Reference 3.2-13), and references establishing their acceptable classifications, are identified in NUREG-0800 SRP 3.2.2 (Reference 3.2-16), Appendix A. For example, some additional systems considered are: instrument and service air, emergency and normal ventilation, fuel handling, and RWMS. These systems are designed, fabricated, erected, and tested to quality standards commensurate with the safety function they perform.

The application of 10 CFR 50.55a (Reference 3.2-12) and GDC 1 provides assurance that established standard practices of proven or demonstrated effectiveness are used to achieve a high likelihood that these safety functions will be performed and that the codes and standards applied are commensurate with the importance to safety of these functions.

The recommendations provided in RG 1.143 (Reference 3.2-10) and RG 1.151 (Reference 3.2-9) are also used in identifying system quality group classification and/or standards for RWMS, and instrument sensing lines, respectively.

Safety-related and non safety-related instrumentation and electrical equipment are discussed in Chapters 7 and 8. Safety-related and important to safety electrical equipment and instrumentation are identified in Appendix 3D.

The quality group classifications are based on the reliance placed on those systems that perform any of the following functions:

- Prevent or mitigate the consequences of accidents and malfunctions originating within the RCPB
- Permit reactor shutdown and maintenance in the safe-shutdown condition
- Contain radioactive material

The US-APWR safety classification system for safety-related SSCs follows the requirements and guidelines described above. The US-APWR SSCs are classified in equipment Classes 1 to ~~7~~10 with respect to the Quality Group Classification. Table 3.2-3 correlates the US-APWR classification of SSCs with the ASME Code, Section III

Table 3.2-2 Classification of Mechanical and Fluid Systems, Components, and Equipment (Sheet 55 of 57)

System and Components	Equipment Class	Location	Quality Group	10 CFR 50 Appendix B (Reference 3.2-8)	Codes and Standards(3)	Seismic Category(4)	Notes
Valves VWS-MOV-425,426	3	R/B	C	YES	5	I	
Non-essential chilled water chemical feed tank supply and return line piping and valves between VWS-VLV-571 and VWS-VLV-574	10	A/B	N/A	N/A	5	NS	
47. Containment Hydrogen Control System							
Igniters	4	PCCV	D	N/A	5	II	
48. Radiation monitoring system							
Piping and valves between and including the containment isolation valves	2	PCCV R/B	B	YES	2	I	
49. Condensate Storage and Transfer System							
Condensate storage tank	8	O/B	D	N/A	4	NS	
The components downstream condensate storage tank	8	O/B T/B	D	N/A	4	NS	
50. Turbine Component Cooling Water System							
All system components	8	T/B	D	N/A	~~4~~5	NS	
51. Non-Essential Service Water System							
All system components	9	T/B	N/A	N/A	5	NS	
52. Secondary Sampling System (SSS)							
Secondary sampling system all components	8	T/B	D	N/A	4	NS	

the effective tornado wind pressure load on the building. This ensures that there is no overall failure of the T/B, due to maximum tornado wind and/or atmospheric pressure change as defined in Table 2.0-1, which could affect the ability of adjacent buildings and structures to perform their intended safety functions. Localized failures of wind girts and other exposed SSCs are permitted. However, these items are designed to remain attached to the structure. ~~Alternately, if such~~ Any items (including the T/B siding) which might ~~could~~ become dislodged and become missiles under the maximum tornado conditions do~~, they are reviewed to ensure that no new missiles are generated that are~~ not warrant further evaluation because they are considered to be enveloped by the missiles addressed in Subsection 3.5.1.4. The use of tornado-generated missile spectrum described in Subsection 3.5.1.4, which is consistent with the most severe missile spectrum as identified for Region I in RG 1.76 Revision 1, provides assurance that the necessary SSCs will be available to mitigate the potential effects of a tornado on plant safety.

The AC/B is not designed for a tornado and consequently it could potentially fail due to design basis tornado loading~~, including loss of its siding~~. However, since its location is sufficiently far away from seismic category I structures, and adjacent safety-related SSCs buried in the plant yard, the collapse of the AC/B would not impact any adjacent safety-related SSCs. The AC/B may also have localized failure due to tornado loading; however, the design precludes the generation of missiles that are not bounded by Subsection 3.5.1.4. The locations of any safety-related SSCs in the plant yard adjacent to the AC/B, including those which may be field routed, are reviewed prior to installation to ensure that their distances away from the AC/B and/or burial depths are sufficient to prevent potential failure effects that could jeopardize their function and integrity. Therefore, the ability of other SSCs to perform their intended safety functions is not affected by the potential collapse or localized failure of the AC/B due to tornado loading.

It is the responsibility of the COL Applicant to assure that site-specific structures and components not designed for tornado loads will not impact either the function or integrity of adjacent safety-related SSCs, or generate missiles having more severe effects than those discussed in Subsection 3.5.1.4. Where required by the results of investigations, structural reinforcement and/or missile barriers are implemented so as not to jeopardize safety-related SSCs.

3.3.3 Combined License Information

COL 3.3(1) *The COL Applicant is responsible for verifying the site-specific basic wind speed is enveloped by the determinations in this section.*

COL 3.3(2) *These requirements also apply to seismic category I structures provided by the COL Applicant. Similarly, it is the responsibility of the COL Applicant to establish the methods for qualification of tornado effects to preclude damage to safety-related SSCs.*

COL 3.3(3) *It is the responsibility of the COL Applicant to assure that site-specific structures and components not designed for tornado loads will not impact either the function or integrity of adjacent safety-related SSCs, or generate missiles having more severe effects than those discussed in Subsection 3.5.1.4.*

10. All electric and mechanical devices and circuitry between the process sensors and the input terminals of the actuator systems involved in generating signals that initiate protective actions by tornado protected portions of systems listed in items 4, 6, 7, and 13.

11. Those portions of the long-term ECCS that would be required to maintain the plant in a safe condition for an extended time after a LOCA.

12. PCCV and other safety-related structures, such as the R/B and PS/B, to the extent that they not collapse, allow perforation by missiles, or generation of secondary missiles, any of which could cause unacceptable damage to tornado-protected items. However, the primary containment need not necessarily maintain its leaktight integrity.

13. The Class 1E electric systems, including the auxiliary systems for the onsite electric power supplies, that provide the emergency electric power needed for the functioning of plant features included in items 1 through 11 above.

14. Those portions of SSCs whose continued function is not required but whose failure could reduce to an unacceptable safety level the functional capability of any plant features included in items 1 through 13 above or could result in incapacitating injury to occupants of the MCR.

Missiles are postulated to be associated with failures of pressurized high-energy fluid system components, over-speed failures of rotating machinery (e.g., motor-driven pumps and fans), explosions within and outside the plant, falling objects, including falling objects resulting from a non-seismically designed SSC during a seismic event, and by tornados or transportation accidents external to the plant. This section discusses missile protection for the following sources:

- Internally generated missiles (Outside PCCV)
- Internally generated missiles (Inside PCCV)
- Turbine missiles
- Missiles generated by tornadoes and extreme winds
- Site proximity missiles (Except aircraft)
- Aircraft hazards

Missiles that could prevent SSCs from performing their intended safety functions may be statistically significant. Potential missile sources are identified and statistically evaluated in subsequent subsections using the following methodology:

1. When a potential missile source is identified, the statistical significance of missile generation is evaluated by a probability analysis. The probability of occurrence (P_1) of generating a missile by any source is not statistically significant if it is less than 10^{-7} per year.

2. When the probability of occurrence, P_1, is greater than 10^{-7} per year for any potential missile source, the probability of impact (P_2) on a significant target is also determined. When considering both the probability of missile occurrence

3.5.1.2.1 Items Containing Pressurized High-energy Fluids or Steam

Subsection 3.5.1.1.1 discusses items containing pressurized high-energy fluids or steam outside containment. Conclusions relating to statistical significance of postulated missiles also apply to similar items containing pressurized high-energy fluids or steam inside containment. Pressurized items unique to inside containment are discussed as follows.

Inside the PCCV, postulated missiles originating from unique pressurized high-energy items such as the RV and associated fittings, SG, reactor coolant pump (RCP), pressurizer, and RCPB piping during normal operation are not considered credible due to ASME Code Section III (Reference 3.5-3) and Section XI (Reference 3.5-4) criteria controlling quality from production through operation, material characteristics, design strengths, and the preservice and inservice inspections. Additional assurances to prevent generation of missiles are provided by prudent operation of the system. The probability of missile occurrence from pressurized high energy items inside containment, P_1, is therefore less than 10^{-7}.

Additionally, postulated missiles in the form of a piece of the CRDM housing or a control rod ejected rapidly from the core is not considered credible. In addition to a low probability of occurrence similar to the RV, the following assurances specific to the CRDMs maintain a low probability of occurrence, P_1, and low probability of impact, P_2, provided by:

- Shop hydro-testing in excess of 125% of system design pressure.
- Hydro-testing of housings to 125% of system design pressure after they are installed on the RV to the head adapters. Housings are also tested during hydro-testing of the completed RCS.
- Housings are made of materials with excellent notch toughness.
- Stress levels in the mechanism are not affected by system thermal transients at power or by thermal movement of the reactor coolant loops (RCLs).
- The welds in the pressure boundary of the CRDM satisfy ASME Code, Section III (Reference 3.5-3) requirements for design, procedure, examination, and inspection.
- A control rod ejection is considered in the safety analyses in Chapter 15, and the design transients in Subsection 3.9.1.1.

Therefore, the product of probability of missile occurrence, P1, and probability of impact, P2, is less than 10-7 for pressurized high energy items inside containment.

3.5.1.2.2 High-Speed Rotating Equipment

Subsection 3.5.1.1.2 discusses high-speed rotating equipment. Conclusions relating to statistical significance of postulated missiles also apply to similar high-speed rotating equipment inside containment. In addition, the RCP is an item unique to inside containment. The RCP and associated flywheel is designed to prevent the probability of missile occurrence by quality control, inservice inspection, and continuous monitoring for shaft vibration. The maximum allowable rotating speed in terms of the strength of the

3.6.1.2.2 Basic Protection Measures

3.6.1.2.2.1 Separation

Separation by distance, compartments or enclosures is used as much as practicable to protect redundant safety-related systems and trains. Deliberate separation protects against the dynamic effects of postulated pipe failures of the systems and components. Redundant safety systems and components are arranged to prevent the loss of the safety function as a result of a postulated pipe failure.

A multi-step process is used to develop the placement of safety-related systems and components which consider the following means for separation.

- Wherever practical, locate safety-related systems away from high-energy piping
- Locate redundant safety systems in separate compartments
- If necessary, enclose specific components required to function as a result of a postulated pipe failure
- Design drainage routing and flood control to maintain adequate separation from equipment required to function as a result of a postulated pipe failure

Each of the four safety trains are separated into four quadrants around the outside of the PCCV. Each train is isolated by physical barriers as well as isolating the radiological control area from the non-radiological control area of the R/B. The concrete walls are designed to prevent events on one safety train from impacting another train. The segregation also includes segregation of fluid containing SSCs of a train from the electrical SSCs of the same train to the extent practical. In general, cable trays are routed at higher elevations than piping. Chases are provided between the cable trays and piping to maintain the electrical/mechanical separation if required. Physically, individual train equipment within the four quadrants is located to provide the maximum separation between the same equipment of the other three trains within the confines of the R/B footprint. This separation minimizes the probability of an event affecting more than one of the safety trains at a given time. Where components must cross between isolating barriers, the penetrations are located above flood levels to the extent possible. In addition, penetration seals maintain compartment to compartment separation.

3.6.1.2.2.2 Barriers and Shields

Where physical separation is not sufficent to protect safety-related systems and components from postulated pipe failures, structural elements such as walls, floors, columns, and foundations are designed to serve as protective barriers and shields whenever possible. Other barriers, deflectors or shields are provided where additional protection is required. The barriers, including compartments as applicable, are designed to withstand loading generated by postulated jet forces and pipe whip impact forces in combination with loadings associated with seismic Category I requirements, within the respective design load limits for the structures. Refer to Subsection 3.6.2.4 for additional discussion on the design of barriers, deflectors and shields.

Portions of the containment internal structure provide a series of protective barriers. The ~~reactor coolant loops (~~RCLs~~)~~ are shielded from the containment liner by the secondary

3.6-20 Report of the ASCE Committee on Impactive and Impulsive Loads. Second ASCE Conference on Civil Engineering and Nuclear Power, Volume V, 1980.

3.6-21 ~~Reactor Coolant Pressure Boundary Leakage Detection Systems.~~ Guidance on Monitoring and Responding to Reactor Coolant System Leakage. Regulatory Guide 1.45, Rev. 1, U.S. Nuclear Regulatory Commission, Washington, DC, May ~~1973~~ 2008.

3.6-22 Control of the Use of Sensitized Stainless Steel. Regulatory Guide 1.44, U.S. Nuclear Regulatory Commission, Washington, DC, May 1973.

3.6-23 Evaluation of Potential Pipe Breaks, NUREG-1061, Vol. 3, U.S. Nuclear Regulatory Commission Piping Review Committee, November 1984.

3.6-24 US-APWR Leak-Before-Break Evaluation. MHI Technical Report, Later.

is different than that recommended by EPRI. In accordance with RG 1.166 (Reference 3.7-41), for each component of the free-field ground motion, the CAV should be calculated as follows: (1) the absolute acceleration (g units) time-history is divided into 1-second intervals, (2) each 1-second interval that has at least 1 exceedance of 0.025 g is integrated over time, (3) all the integrated values are summed together to arrive at the CAV. The approaches in EPRI Report NP-5930 (Reference 3.7-43) and EPRI Report TR-100082 (Reference 3.7-42) provide additional guidance on determining the CAV.

Acceleration and velocity spectra can be calculated from the measurement of free-field ground motion in order to set additional conditions for OBE exceedance in addition to the CAV check. When free-field instrumentation is used, the site-specific OBE is exceeded and plant shutdown is required in accordance with the criteria of RG 1.166 (Reference 3.7-41), if the first of the following three conditions in combination with either the second or third conditions are met~~The site-specific OBE is exceeded only if all of the following three conditions identified in RG 1.166 (Reference 3.7-41) are met~~:

1. Any calculation of CAV described above yields a value that is greater than 0.16 g-second.
2. 5% damping ARS generated by free-field ground motion ARS are higher than 0.2 g at frequencies between 2 and 10 Hz, or higher than the site-specific OBE ARS between 2 and 10 Hz, whichever is greater.
3. 5% damping velocity response spectra generated by free-field ground motion are higher than 6 in./sec at frequencies between 1 and 2 Hz, or higher than the site-specific OBE velocity response spectra between 1 and 2 Hz, whichever is greater.

If free-field instrumentation is not used, the criteria of RG 1.166 Appendix A are used for OBE exceedance checks, it is assumed that the checks of CAV and free field ground spectra are exceeded, and shutdown of the plant is required if the 5% damping spectra are exceeded at any of the in-structure instrumentation. ~~The shutdown of the plant is required only if all three of the above conditions are met and any of the 5% damping ARS obtained from the measurements of the instructure accelerations exceed the OBE spectra at the corresponding location. If the free-field ground motion is not measured, it is conservatively assumed that the checks of CAV and free-field ground accelerations and velocities are exceeded.~~

Additionally, low-level seismic effects would be included in the design of certain equipment potentially sensitive to a number of such events, based on a percentage of the responses calculated for the SSE.

3.7.4.2 Location and Description of Instrumentation

Consistent with the guidance of RG 1.12 (Reference 3.7-40), the seismic instrumentation for the US-APWR standard plant is solid-state multi-channel digital instrumentation with computerized recording and playback capability that allows the processing of data at the plant site within 4 hours of a seismic or other dynamic event.

- The US-APWR triaxial time-history accelerograph consists of a centralized digital time history analyzer/recorder with multi-channel capability, which is located in a panel in a

the frequency response of the reactor internals with the expected responses based on experience and measurements.

Fluid-structure interaction effects are accounted for by matrices developed for that purpose. The hydrodynamic masses are calculated for the following locations in the seismic analysis model:

(1) Between the reactor vessel and core barrel in two horizontal directions

(2) Between the core barrel and neutron reflector in two horizontal directions

(3) Between the upper core support and reactor vessel head in vertical direction

In the LOCA dynamic analysis, the hydrodynamic mass matrices between the reactor vessel and core barrel were deleted because the hydrodynamics mass effect were included in the pressure force as the output of blow-down analysis code, MULTIFLEX.

The effects of flow upon both the lumped mass and flexibility properties in the LOCA dynamic system model were also accounted because they were included in the MULTIFLEX results which were used as input to the LOCA dynamic system model.

The reactor internals seismic input can either be from ~~in-structure response spectra~~ ISRS or in-structure time-history accelerations, which is obtained from the analysis results described in Subsection 3.7.2 and Appendix 3H. This model employs the design response spectra of the RCL model based on modified input from RG 1.60, Rev. 1 (Reference 3.9-26) as described in Subsection 3.7.2.2. This model is used in determining the effect of vibratory motion for SSE and 1/3 SSE seismic conditions.

Additional loading input to the seismic analysis are vertical pressure loadings converted to nodal point external loads, and the vertical weights of the reactor internals and interfacing components, as inputs of density on the beams with spring effects or mass nodal points.

The reactor internals static computer models are used to determine the reactor internals component stresses and displacements. The structural design adequacy of the reactor internals are verified to be capable of withstanding the dynamic loadings of the most severe SSE in combination with the LOCA events.

3.9.2.5.2 Pipe Rupture Analysis Methodology and Acceptance Criteria

The pipe rupture design basis methodology is similar to the seismic methodology, wherein, a dynamic computer model is used to determine the maximum accelerations, displacements, and loadings, and the reactor internals static computer models are used to determine the reactor internals component stresses and displacements. However, instead of a response spectra or time-history for the seismic inputs, a time-history computer code is used to determine the pipe rupture loads-time history on the dynamic computer model nodes and elements. The details of the pipe rupture dynamic model and pressure input loads are discussed below.

The LOCA dynamic computer model is a three-dimensional FE model that defines the geometry, material properties, and nodal point connections and elements.

NCA, NB, NC, ND, NF, NG, Code Cases and Appendices including Appendix I, F, and N, 2001 edition thru 2003 Addenda.[1]

3.9-2 Nuclear Safety Criteria for the Design of Stationary Pressurized Water Reactor Plants, ANS N5.1.1-1983, American Nuclear Society.

3.9-3 Thermal Stresses in Piping Connected to Reactor Coolant Systems, Generic Communications. Bulletin No. 88-08, U.S. Nuclear Regulatory Commission, Washington, DC, June 22, 1988, including Supplements 1, 2, and 3, dated: June 24, 1988; August 4, 1988; and April 11, 1989.

3.9-4 Pressurizer Surge Line Thermal Stratification. Generic Communications, Bulletin No. 88-11, U.S. Nuclear Regulatory Commission, Washington, DC, December 20, 1988.

3.9-5 Fracture Toughness Requirements, Domestic Licensing of Production and Utilization Facilities, Energy. Title 10, Code of Federal Regulations, Part 50, Appendix G, U.S. Nuclear Regulatory Commission, Washington, DC.

3.9-6 Abaqus, Finite Element Structural Analysis Program, Version 6.7, SIMULIA, Providence, RI.

3.9-7 ANSYS, Finite Element Structural Analysis Program, Release 11.0, ANSYS, Inc., Canonsburg, PA, 2007.

3.9-8 RELAP-5, Transient Hydraulic Analysis Program, MOD 3.2, Idaho National Engineering and Environmental Laboratory, Idaho Falls, ID.

3.9-9 MULTIFLEX, A FORTRAN-IV Computer Program for Analyzing Thermal-Hydraulic-Structure System Dynamics. WCAP-8709 (proprietary), and WCAP-8709 (nonproprietary), September 1977.

3.9-10 NASTRAN, Femap with NX NASTRAN, Version 9.3.

3.9-11 Seepage Quantification of Upset in Reactor Tubes [SQUIRT], Code System to Predict Leakage Rate and Area of Crack Opening for Cracked Pipe in Nuclear Power Plants, Version 1.1, Oak Ridge National Laboratory (PSR-533), Oak Ridge, TN, 2003.

3.9-12 Initial Test Programs for Water-Cooled Nuclear Power Plant. Regulatory Guide 1.68, Rev. 3, U.S. Nuclear Regulatory Commission, Washington, DC, March 2007.

3.9-13 Code for Operation and Maintenance of Nuclear Power Plants. American Society of Mechanical Engineers (ASME OM Code), 1995 Edition through 2003 Addenda.

3.9-14 Code for Pressure Piping, Power Piping. ANSI B31.1, 2004 Edition, American Society of Mechanical Engineers.

[1] As for the RCL piping the 1992 Edition including 1992 Addenda will be used for ASME Code Section III NB-3200,NB-3600 analyses in accordance with the requirements of 10CFR50.55a(b)(1)(iii).

3.12.5.3.3 Thermal Expansion

The effect of linear thermal expansion range during various operating modes is considered along with thermal movements of terminal equipment nozzles, anchors, or restraints (thermal anchor movements) corresponding to the operating modes. The stress free temperature is taken as 70°F. The piping systems operating at a temperature of 150°F and below are not analyzed for the effects of linear thermal expansion. However, if the piping system does not contain at least one 90-degree bend, then thermal expansion analysis is needed. Such straight pipe layout without at least one 90-degree bend is avoided when practical.

Thermal movements less than or equal to 1/16th inch may be excluded from analysis as this represents the power industry practice of allowing 1/16th inch gap or clearance all around the pipe in pipe supports.

3.12.5.3.4 Earthquake Loads

As required by GDC-2, the main earthquake load used in the US-APWR design is defined in Section 3.7.

The effects of inertial loads and anchor movements due to SSE are considered as Service Level D loads in the design of piping and piping supports. Fatigue effects due to earthquake loads are discussed in Subsection 3.12.5.7. Tables 3.12-2, 3.12-3, and 3.12~~-~~-4 identify SSE inertial and displacement loads in various load combinations for ASME Code, Section III (Reference 3.12-2), Class 1, 2, and 3 piping, and piping supports.

3.12.5.3.5 Fluid Transient Loads

The relief/safety valve thrust loads, for open or closed systems, are functions of valve opening, flow rate, flow area, and fluid properties. Either a dynamic analysis or a static analysis using a dynamic load factor is performed to analyze such effects. The safety/relief valve thrust loads are considered in Level B, C, or D service load combinations.

The water hammer phenomenon is set in motion by the rapid actuation of valves or the sudden start or trip of a pump or turbine. Fluid hammer is analyzed using dynamic analysis methods. The water hammer loads are considered in Level B, C, or D service load combinations.

3.12.5.3.6 Wind/Tornado Loads

If the COL Applicant finds it necessary to lay ASME Code, Section III (Reference 3.12-2), Class 2 or 3 piping exposed to wind or tornado loads, then such piping must be designed to the plant design basis loads.

3.12.5.3.7 Design Basis Pipe Break Loads

High-energy line breaks cause loads in the form of pipe whip, jet impingement, and changes in environmental conditions. Design basis pipe break (DBPB) loads include the impact of the RCPB piping break, main steam and feedwater line breaks excepting the

Chapter 4

Page	Location (e.g., subsection with paragraph/sentence/item, table with column/row, or figure)	Description of Change
4.5-8	Table 4.5-1	RAI No.457, 4.5.1-10 1st column: Material specification for the CRDM pressure housing is changed from “SA-182 Grade F316” to “SA-182 Grade F316(4), F316LN”. RAI No.457, 4.5.1-8 Last column: Environment of the welding material for the CRDM pressure housing is changed from “Not exposed to reactor coolant water” to “Inside surface exposed to reactor coolant water”.
4.5-9	Note of Table 4.5-1	RAI No.457, 4.5.1-10 Note (4) is added.

Table 4.5-1 Summary of Control Rod Drive System Structural Materials

Component	Material Specification(1)	Environment
CRDM pressure housing material in contact with reactor coolant on the inside surface	SA-182 Grade F316(4), F316LN	Inside surface exposed to reactor coolant water
Flux Ring	ASTM A519 Gr.1015	Not exposed to reactor coolant water
Latch assembly - magnetic poles, plungers, and keys	SA-479 Type 410	Exposed to reactor coolant water
Latch assembly - springs	Alloy X-750 (ASME SB637 N07750)(2)	Exposed to reactor coolant water
Latch assembly - link pins	Cobalt alloy (HAYNES No. 25 or equivalent material(3))	Exposed to reactor coolant water
Latch assembly - other parts	SA-479 Type 304 SA-213 Grade TP 304	Exposed to reactor coolant water
Latch assembly - cladding on latch arm tips and pin holes	Cobalt alloy (Stellite No.6 or equivalent material(3))	Exposed to reactor coolant water
Latch assembly - plating on sliding surfaces	Chrome plate	Exposed to reactor coolant water
Latch assembly - coating on tips of latch arms	Chrome carbide	Exposed to reactor coolant water
Drive rod assembly - drive rod,	SA-268 TP410	Exposed to reactor coolant water
Drive rod assembly - unlatch button, protection sleeve	SA-479 Type 410	Exposed to reactor coolant water
Drive rod assembly - coupling	SA-479 Type 403	Exposed to reactor coolant water
Drive rod assembly - springs	Alloy X-750 (ASME SB637 N07750)(2)	Exposed to reactor coolant water
Locking button in the drive rod assembly and pins in the latch assembly	Cobalt alloy (HAYNES No. 25 or equivalent material(3))	Exposed to reactor coolant water
Drive rod assembly other parts	SA-479 Type 304	Exposed to reactor coolant water
Coil assembly - housing	ASTM A536 Grade 60-40-18	Not exposed to reactor coolant water
Coil assembly - coil bobbins	Glass silicone resin	Not exposed to reactor coolant water
Coil assembly - wire	Double glass insulated copper	Not exposed to reactor coolant water
Welding material used in CRDMs housing	SFA-5.9 ER316L EC316L	~~Not exposed to reactor coolant water~~ Inside surface exposed to reactor coolant water

Notes: (1) Additional information appears in the text of Section 4.5 and Subsection 5.2.3.
(2) Additional stringent specification, MIL-S-23192, is applied.

(3) Equivalent material is a substitute material having the same chemistry and properties as the preferred material. The same requirements would be specified in the procurement requirements.
(4) Maximum carbon content will be controlled under 0.05% (heat analysis) and 0.06% (product analysis) when standard grade stainless steel is used.

Chapter 5

US-APWR DCD Chapter 5 Rev. 2, Tracking Report Rev. 3 Change List

Page	Location (e.g., subsection with paragraph/ sentence/ item, table with row/column, or figure)	Description of Change
5.2-37	Subsection 5.2.5.1	Correct the title of reference to ”Guidance on Monitoring and Responding to Reactor Coolant System Leakage” [RAI 549-4390, Question 05.02.05-12]
5.2-46	Subsection 5.2.7 Reference 5.2-15	Correct the title of reference to ”Guidance on Monitoring and Responding to Reactor Coolant System Leakage” [RAI 549-4390, Question 05.02.05-12]

5.2.5 Reactor Coolant Pressure Boundary (RCPB) Leakage Detection

The reactor coolant pressure boundary (RCPB) leak monitoring system provides a means of detecting and, to the extent practical, identifying the source of reactor coolant leakage and monitoring leaks from the reactor coolant and associated systems. This system provides information which permits the plant operators to take corrective action if a leak is evaluated as detrimental to the safety of the facility.

5.2.5.1 Design Bases

The leak monitoring system is designed in accordance with the requirements of General Design Criterion 30 and the regulatory guidance as identified below:

- General Design Criterion 30, "Quality of Reactor Coolant Pressure Boundary" of Appendix A of 10 CFR Part 50, "General Design Criteria for Nuclear Power Plants," to provide a means of detecting and, to the extent practical, identifying the source of reactor coolant leakage.
- Regulatory Guide 1.45, "~~Reactor Coolant Pressure Boundary Leakage Detection Systems~~Guidance on Monitoring and Responding to Reactor Coolant System Leakage" (Ref.5.2-15).
- Regulatory Guide 1.29, "Seismic Design Classification" (Ref.5.2-7).

5.2.5.2 Classification of Leakage

RCPB leakage is classified as either identified or unidentified leakage in accordance with the guidance of position 1 of regulatory guide 1.45.

Identified leakage includes the following:

- Leakage into closed systems such as pump seals or valve packing leaks that are captured, flow metered, and conducted to a sump or collecting tank.
- Leakage into the containment atmosphere for which the location is identified, without interfering with the unidentified leakage detection system or is identified as leakage from other than the RCPB.
- Leakage into auxiliary systems and secondary systems.

Unidentified leakage is all other leakages.

5.2.5.3 Detection of Identified Leakage

Identified leakage other than intersystem leakage, such as pump seal or valve packing, is directed to the C/V reactor coolant drain tank where it is monitored by tank pressure, temperature, and level indications.

An important identified leakage path for reactor coolant into other systems is a flow to the secondary side of the steam generator (SG) through the SG tubes.

5.2.7 References

5.2-1 Definitions, NRC Regulations Title 10, Code of Federal Regulations, 50.2.

5.2-2 Contents of Construction Permit and Operating License Applications; Technical Information, NRC Regulations Title 10, Code of Federal Regulations, 50.34.

5.2-3 Domestic Licensing of Production and Utilization Facilities, NRC Regulations Title 10, Code of Federal Regulations, 50.55a.

5.2-4 General Design Criteria for Nuclear Power Plants, NRC Regulations Title 10, Code of Federal Regulations, 50 Appendix A.

5.2-5 Fracture Toughness Requirements, NRC Regulations Title 10, Code of Federal Regulations, 50 Appendix G.

5.2-6 Quality Group Classifications and Standards for Water-, Steam-, and Radioactive-Waste-Containing Components of Nuclear Power Plants, Regulatory Guide 1.26, Rev. 4, March 2007.

5.2-7 Seismic Design Classification, Regulatory Guide 1.29, Rev.4, March 2007.

5.2-8 Control of Ferrite Content in Stainless Steel Weld Metal, Regulatory Guide 1.31, Rev. 3, April 1978.

5.2-9 Design, Fabrication, and Materials Code Case Acceptability, ASME Section III, Regulatory Guide 1.84, Rev. 34, October 2007.

5.2-10 Control of Electroslag Weld Properties, Regulatory Guide 1.34, Rev.0, December 1972.

5.2-11 Nonmentallic Thermal Insulation for Austenitic Stainless Steel, Regulatory Guide 1.36, Rev.0, February 1973.

5.2-12 Quality Assurance Requirements for Cleaning of Fluid Systems and Associated Components of Water-Cooled Nuclear Power Plants, Regulatory Guide 1.37, Rev. 1, March 2007.

5.2-13 Control of Stainless Steel Weld Cladding of Low-Alloy Steel Components, Regulatory Guide 1.43, Rev.0, May 1973.

5.2-14 Control of the Use of Sensitized Stainless Steel, Regulatory Guide 1.44, Rev.0, May 1973.

5.2-15 ~~Reactor Coolant Pressure Boundary Leakage Detection Systems~~Guidance on Monitoring and Responding to Reactor Coolant System Leakage, Regulatory Guide 1.45, Rev.1, May 2008.

5.2-16 Materials and Inspections for Reactor Vessel Closure Studs, Regulatory Guide 1.65, Rev. 0, October 1973.

Chapter 6

US-APWR DCD Chapter 6 Rev. 2, Tracking Report Rev. 3 Change List

Page	Location (e.g., subsection with paragraph/sentence/ Item, table with column/row, or figure)	Description of Change
6.1-1	6.1.1.1	RAI No.379, Question No.06.01.01-9 Deleted "Austenitic stainless base metal used for the pressure retaining material of the ESF components has a limited carbon content not exceeding 0.03%." in the second paragraph.
6.1-2	6.1.1.1	RAI No.379, Question No.06.01.01-9 Added "Austenitic stainless steel base metal used for the pressure retaining materials, which conditions are similar to the RCS, has a limited carbon content not exceeding 0.05% (heat analysis) and 0.06% (product analysis) when the standard grade stainless steel is used." in the last of the 4th paragraph. RAI No.544, Question No.06.01.01-17 Added "Preheating for carbon steel and low alloy steel is applied in accordance with qualified welding procedure specification." in the last of the 8th paragraph.
6.1-8-20	Table 6.1-1, Table 6.1-2	RAI No.544, Question No.06.01.01-13 Revised Table 6.1-1 and Table 6.1-2.
6.2-49	6.2.2.3	RAI No.530, Question No.04.04-15 Added "As for instrumentation, all connections, by design are either at the horizontal or above." in the last of 7th bullet in Subsection 6.2.2.3.
6.2-193	Table 6.2.4-2	RAI No.553, Question No.06.02.04-53 Added information of Electric Penetration and Spare Penetration.

Page	Location (e.g., subsection with paragraph/sentence/ Item, table with column/row, or figure)	Description of Change
6.2-194-206	Table 6.2.4-3	RAI No.553, Question No.06.02.04-53 RAI No.552, Question No.06.02.06-30 Replaced “55” with “56” in P232, P251, P234 and P249. Replaced “57” with “56” in P408 and P409. Replaced “-“ with “Sht. 52” in spare penetration. Replaced “-“ with “Sht. 51” in electrical penetration. Replaced “C” with “A” and replaced “Y” with “N” in P210, P227, P258, P274, P212, P225, P259, P272, P214, P224, P261 and P271. Replaced “A” with “C” and replaced “N” with “Y” in P408 and 409. Added “Note 4” in P151, P154, P155, P158, P210, P227, P258, P274, P212, P225, P259 and P272. Deleted “Note 8” in P214, P224, P261 and P271. Added “Note 7” in P151, P154, P155 and P158. Replaced “Note 9” with “Note 8” Deleted “Note 8” in Page 6.2-206 Replaced “Note 9” with “Note 8” in Page 6.2-206.
6.2-306-355	Figure 6.2.4-1	RAI No.552, Question No.06.02.06-30 Added “ 3/4” ” in sheet 12. RAI No.553, Question No.06.02.04-53 Added Sheet 52 for Spare Penetration Editorial: Correct typo Sheet 3; Added “PEN#206” Sheet 29; Added “FC” and “Sample Sink” Sheet 31; Added penetration number. Sheet 33; Added “ 4” “ Sheet 46; Added “ “A” “ Sheet 48; Added “Inside”
6.3-7	6.3.2.2.3	RAI No.523, Question 11.02-28 Replaced “47,680” with “29,410”.

6.1 Engineered Safety Feature Materials

This section provides information on the material selection and fabrication of ESF systems. In addition to other important attributes, the materials used in ESF systems are selected for compatibility with the refueling water storage pit (RWSP) water, as well as a wetting spray that combines these fluids with sodium tetraborate decahydrate (NaTB) RWSP additive in the unlikely event of a design-basis accident (DBA). In addition to the material selection, this section discusses the material treatment processes.

6.1.1 Metallic Materials

Chapter 3 identifies the American Society of Mechanical Engineers (ASME) Boiler and Pressure Vessel Code 2001 Edition through 2003 Addenda that apply to the design and manufacture of the US-APWR components described in this DCD. Later (more recent) editions or addenda to the ASME Code may be used for materials, as allowed by the ASME Code, provided that the more recent edition and/or addenda are permitted by 10CFR50.55a, or are authorized as a proposed alternative under 10CFR50.55a(a)(3) (Ref. 6.1-1). Chapter 3 also presents (or references) all design, analysis, and construction requirements imposed by the U.S. Nuclear Regulatory Commission (NRC) on plant structures, systems, and components (SSCs).

6.1.1.1 Materials Selection and Fabrication

The material specifications used for the RCPB piping and valves in Chapter 5, Subsection 5.2.3, are applied to pressure retaining materials of ESF systems, and are listed in Table 6.1-1. The materials for use in ESF systems are selected for compatibility with core coolant and containment spray solutions, as described in ASME Code Section III (Ref. 6.1-2), Articles NC-2160 and NC-3120. Consideration of the deterioration of materials during service due to thinning by corrosion, erosion, mechanical abrasion, or other environmental effects has been included in the design of ESF components and systems.

Table 6.1-1 presents the material specifications for pressure retaining materials of the prestressed concrete containment vessel (PCCV) and other ESF systems that are not part of the RCPB. The grade and type of the ESF materials have been chosen to enhance corrosion resistance, strength, and hardness. The RCPB materials are described in Chapter 5, Subsection 5.2.3. The materials proposed for the ESFs comply with Appendix I to ASME Code Section III (Ref. 6.1-2); and Parts A, B, and C of ASME Code Section II (Ref 6.1-3). The material specifications for the pressure-retaining materials of ESF components meet the requirements of ASME Code Section III, Class 2, Article NC-2000 for Quality Group B, ASME Code Section III, Class 3, Article ND-2000 for Quality Group C, and ASME Code Section III for containment pressure boundary components. The materials used in the fabrication of containment penetrations meet the requirements of ASME Code Section III, Division 1, Articles NC-2000 or NE-2000. ~~Austenitic stainless base metal used for the pressure retaining material of the ESF components has a limited carbon content not exceeding 0.03%.~~

The construction materials of ESF systems are compatible with core coolant and containment spray solutions. The ESF construction materials that would be exposed to core coolant and containment spray solutions in the event of a DBA are listed in Table 6.1-2.

The requirements from RG 1.44 (Ref. 6.1-4) are followed during the manufacture and construction of the ESF components and structures. The material used to fabricate the safety significant portions of the ESF systems (including supports) is highly resistant to corrosion. Process controls are enforced during all aspects of the component fabrication and construction to minimize the exposure of stainless steel to contaminants that could lead to stress-corrosion cracking. To avoid significant sensitization during fabrication and assembly of austenitic stainless steel components of the ESF, halogens and halogen-bearing compounds (e.g., die lubricants, abrasives, marking compounds, and masking tape) are not used in the welding processes during the construction of ESF components. Austenitic stainless steel base materials for ESF applications are solution annealed to prevent sensitization and stress corrosion cracking. Furnace-sensitized materials are not used in ESF systems. When practical, solution heat-treating includes rapid cooling rates following welding to minimize the formation of carbon deposits in the heat affected zone of the material. Austenitic stainless steel base metal used for the pressure retaining materials, which conditions are similar to the RCS, has a limited carbon content not exceeding 0.05% (heat analysis) and 0.06% (product analysis) when the standard grade stainless steel is used.

All ESF components in contact with core coolants and containment spray solutions are either fabricated from or clad with austenitic stainless steel. Cold-worked austenitic stainless steel is not used for pressure boundary applications. If such material is used for other applications when there is no proven alternative available, cold work is controlled, measured and documented during each fabrication process. An augmented inservice inspection (ISI) is conducted to ensure the structural integrity of such components during service, which is described in Section 6.6. Cold-worked austenitic stainless steels have a maximum 0.2 percent offset yield strength of 620 MPa (90,000 psi) to reduce the probability of stress-corrosion cracking in ESF systems.

Operating experience has demonstrated that certain nickel-chromium-iron alloys are susceptible to stress-corrosion cracking. When necessary, nickel-chromium-iron alloys used in the fabrication of ESF components in the US-APWR design is limited to Alloy 690. Alloy 690 was shown to have a high resistance to stress-corrosion cracking.

Fracture toughness properties of the materials used in ESF components are in complete agreement with the ASME Code Section III, Subarticles NC/ND/NE-2300 and this agreement maintained.

The control of welding, heat treatment, welder qualification, and contamination protection for ESF ferritic and austenitic stainless steel material fabrication are described in Chapter 5, Subsection 5.2.3. Preheating for carbon steel and low alloy steel is applied in accordance with qualified welding procedure specification.

Table 6.1-1 Principle Engineered Safety Feature Pressure Retaining Material Specifications (Sheet 1 of 3~~5~~)

ESF Component	Material	Class, Grade or Type
Containment		
Containment Vessel Liner	SA-516	Gr. 60, 70
Penetrations		
Plate	SA-516	Gr. 60, 70
	SA-537	Cl. 1
	SA-240	Type 304
Pipe	SA-106	Gr. A, B
	SA-312	Gr. TP304, TP304L
	SA-358	Gr. 304, 304L
Flued Head	SA-266	Gr. 3
	SA-336	Gr. F22
	SA-182	Gr. F22, F304, F304L
Containment Spray System		
CS/RHR Pump		
Pressure casting	SA-351	Gr. CF-3 or CF-3M Gr. CF-8 or CF-8M
Pressure forgings	SA-182	Gr. F304 or F304L/LN Gr. F316 or F316L/LN
Tubes and pipes	SA-213 SA-312	Type. 304 or 304L Type. 316 or 316L
Closure Stud Bolts	SA-193	Gr. B7 or B8
	SA 638	G660
Closure Stud Nuts	SA-194	Gr. 7 or 8
	SA 638	G660
CS/RHR Heat Exchanger		
Pressure plates	SA-240	Type 304, 304L, 316, 316L
	SA-516	Gr. 60, 70
Pressure forgings	SA-105	-
	SA-182	Gr. F304, F304L, F316, F316L
	SA-350	Gr. LF1, LF2
Tubes and pipes	SA-213 SA-312	Gr. TP304, TP304L, TP316, TP316L
Closure bolts	SA-193	Gr. B6, B7, B8, B16
Closure nuts	SA-194	Gr. 2, 2H, 4, 8, 8M, 16
Piping		
Class 1 Piping	See Table 5.2.3-1	
Class 2 Piping	SA-312	Gr. TP304, TP304L
	SA-358	Gr. 304, 304L
Valve		
Class 1 Valves	See Table 5.2.3-1	

Table 6.1-1 Principle Engineered Safety Feature Pressure Retaining Material Specifications (Sheet 2 of 3)

ESF Component	Material	Class, Grade or Type
Class 2 Valves	The material for Class 2 valves are the same as Class 1. See Table 5.2.3-1	
Fitting / Flange	SA-312	Gr. TP304, TP304L
	SA-358	Gr. 304, 304L
	SA-182	Gr. F304, F304L
	SA-479	Type 304, 304L
Emergency Core Cooling System		
Safety Injection Pump		
Pressure casting	SA-351	Gr. CF-3 or CF-3M Gr. CF-8 or CF-8M
Pressure forgings	SA-182 ASTM A965	Gr. F304 or F304L/LN Gr. F316 or F316 L/LN
	SA-508	Gr. 3 Cl.1
Tubes and pipes	SA-213 SA-312	Type 304 or 304L Type 316 or 316L
Closure Stud Bolts	SA-193	Gr. B6 or B7
	SA 638	G660
Closure Stud Nuts	SA-194	Gr. 6 or 7
	SA 638	G660
Cladding, Buttering	Type 308L/309L Stainless Steel Strip Electrode	-
Accumulator		
Pressure plates	SA-516	Gr. 60 or 70
Pressure forgings	SA-105	-
	SA-182	Gr. F304, F304L, F316 or F316L
	SA-350	Gr. LF1 or LF2
Pipes	SA-312	Gr. TP304, TP304L, TP316 and TP316L
Closure bolts	SA-193	Gr. B6, B7, B8, B16
Closure nuts	SA-194	Gr. 2, 2H, 4, 8, 8M or 16
Piping		
Class 1 Piping	See Table 5.2.3-1	
Class 2 Piping	SA-312	Gr. TP304, TP304L
	SA-358	Gr. 304, 304L
Valves		
Class 1 Valves	See Table 5.2.3-1	
Class 2 Valves	The material for Class 2 valves are the same as Class 1. See Table 5.2.3-1	

Table 6.1-1 Principle Engineered Safety Feature Pressure Retaining Material Specifications (Sheet 3 of 3)

ESF Component	Material	Class, Grade or Type
RWSP	ASTM A 572	Grade 60
	ASTM A 240	Gr. TP304L
Fitting / Flange	SA-312	Gr. TP304, TP304L
	SA-358	Gr. 304, 304L
	SA-182	Gr. F304, F304L
	SA-479	Type 304, 304L
ESF Filter System		
	See Subsection 6.5.1.7	
Weld Filler Material		
	SFA-5.1	E6018, E7018, E6016, E7016
	SFA-5.4	E308-16, E309-16, E308L-16, E309L-16
	SFA-5.5	E9018-B3, E9016-B3
	SFA-5.9	ER308, ER309, ER308L
	SFA-5.18	ER70S-2, ER70S-3, ER70S-4, ER70S-6, ER70S-G
	SFA-5.22	E309LT1-1/4, E308LT1-1/4
	SFA-5.28	ER90S-B3

~~ESF Component~~	~~Material Specification~~
~~Safety Injection System~~	
~~Safety Injection Pump~~	~~SA-216 Gr. WCB and WCC~~
	~~SA-217 Gr.WC9~~
	~~SA-351 GrCF8M and CF3M~~
	~~SA-487 Gr.CA6NM~~
	~~SA-182 TP F304, F304L, F316, F316L Gr. F11, F22, FXM-19~~
	~~SA-350 Gr.LF1 and LF2~~
~~Accumulator~~	~~SA-516 Gr.70~~
	~~SA-182 F304~~
	~~SA-516 Gr.70~~
~~Piping~~	~~SA-106, Gr. B and C~~
	~~SA-155 Gr. KC70 and 70~~
	~~SA-213, TP 304, 304L, 316 and 316L~~

	~~SA-249, TP 304L and 316L~~
	~~SA-312, TP 304, 304L and 316L~~
	~~SA-333 Gr. 1 and 6~~
	~~SA-376, TP 304 and 316~~
	~~SB-111 Gr. CDA 706~~
	~~SB-466 Gr. CDA 706~~
	~~SB-167 UNS N06690~~
	~~SA-312 TP316~~
	~~SA-358 304~~
	~~SA-53 Gr.A~~
~~Fitting/flange~~	~~SA-105~~
	~~SA-181, Gr. I and II~~
	~~SA-182, TP F304, F304L, F316, and F316L~~
	~~SA-234 Gr. WPB, WPBW, WPCW, and WPC~~
	~~SA-403, WP 304, 304L, 304W, and 304LW~~
	~~SA-420 Gr. WPL6~~
	~~SA-479, TP 304, 304L, and 316~~
	~~SA-53 Gr.A~~
	~~SA-312 TP304~~
	~~SA-358 304~~
	~~SA-106 Gr.B~~
	~~SA-312 TP316~~
	~~SA-181 Gr.70~~

~~**Table 6.1-1 Principle Engineered Safety Feature Pressure Retaining Material Specifications (Sheet 2 of 5)**~~

~~**ESF Component**~~	~~**Material Specification**~~
~~Plate~~	~~SA-240, TP 304, 304L, and 316L~~
	~~SA-285 Gr. A and C~~
	~~SA-36~~
	~~SA-515 Gr. 60, 70~~
	~~SA-516 Gr. 60, 70~~
	~~SA-615 Gr. 60~~
	~~SA-537 Class 1~~
	~~SB-171 Gr. CDA 706~~
	~~ASTM A 515 Gr. 70~~
~~Shapes~~	~~SA-36~~
	~~ASTM A-36~~
	~~ASTM A-500 Gr. B (Code Case N71-18 in accordance with the conditions of RG 1.84)~~

~~Bolt/nuts/studs/pins~~	~~SA-193 Gr. B5, B6, B7, B8, and B8M~~
	~~SA-194, Gr. 2H, 8H, 8M, 7, 4, 6, and B8~~
	~~SA-307 Gr. B~~
	~~SA-320 Gr. L7~~
	~~SA-325 Type 1~~
	~~SA-453 Gr. 660A and 660B~~
~~Casting~~	~~SA-216 Gr. WCB and WCC~~
	~~SA-217 Gr. WC9~~
	~~SA-351 Gr. CF8, CF8M and CF3M~~
	~~SA-487 Gr. CA6NM~~
	~~SB-61~~
	~~SB-62 GR. CDA 836~~
	~~SB-148 Gr. CA 952~~
	~~ASTM-A276 TP410~~
~~Forging~~	~~SA-105~~
	~~SA-182, TP F304, F304L, F316, and F316L; Gr. F11, F22 and FXM-19~~
	~~SA-240 TP 304, 316 and 316L~~
	~~SA-350 Gr. LF1 and LF2~~
	~~SA-479, TP 304, 304L, 316, XM-19~~
~~Bars~~	~~SA-479, TP 304, 316 and 410 Gr. 316L and F316~~
	~~SA-564 Gr. 630~~

~~Table 6.1-1 Principle Engineered Safety Feature Pressure Retaining Material Specifications (Sheet 3 of 5)~~

~~ESF Component~~	~~Material Specification~~
~~Weld rod~~	~~SFA 5.1, E 6010 and E7018~~
	~~SFA 5.4, E-308-16, E 308L-16, E 309, E316L~~
	~~SFA 5.9, ER 308, ER 308L, ER 309, ER316L~~
	~~SFA 5.17, EM 12K~~
	~~SFA 5.18, E 70S-2, E 70S-3, E 70S-4, E70S-6, and E 70S-1B~~
	~~SFA 5.20, E 70T-1 and 70T-5~~
	~~SFA 5.11, ENiCrFe-7~~
	~~SFA 5.14, ERNiCrFe-7~~
~~**Containment Spray System**~~	
~~CS/RHR pump~~	~~SA-216 Gr. WCB and WCC~~
	~~SA-217 Gr.WC9~~
	~~SA-351 GrCF8M and CF3M~~

	~~SA-487 Gr.CA6NM~~
	~~SA-182 TP F304, F304L, F316, F316L Gr. F11, F22, FXM-19~~
	~~SA-350 Gr.LF1 and LF2~~
~~CS/RHR heat exchanger~~	~~SA-106, Gr. B and C~~
	~~SA-213, TP304, 304L, 316 and 316L~~
	~~SA-249, TP304L and TP316L~~
	~~SA-312, TP304, 304L and 316L~~
	~~SA-105~~
	~~SA-182, TP F304, F304L, F316, F316L;Gr. F11, F22 and FXM-19~~
	~~SA-240 TP304, 316 and 316L~~
	~~SA-350 Gr. LF1 and LF2~~
	~~SA-479, TP304, 304L, 316 and XM-19~~
	~~SA-516 Gr.60 and 70~~
	~~SA-181 Cl.60 and 70~~
~~Piping~~	~~SA-106, Gr. B and C~~
	~~SA-155 Gr. KC70 Class 1 and 70 Class 1~~
	~~SA-213, TP 304, 304L, and 316~~
	~~SA-249, TP 304L~~
	~~SA-312, TP 304 and 304L~~
	~~SA-333 Gr. 1 and 6~~
	~~SA-376, TP 304 and 316~~
	~~SB-111 Gr. CDA 706~~

~~Table 6.1-1 Principle Engineered Safety Feature Pressure Retaining Material Specifications (Sheet 4 of 5)~~

~~ESF Component~~	~~Material Specification~~
	~~SB-466 Gr. CDA 706~~
	~~SB-167 UNS N06690~~
	~~SA-312 TP316~~
	~~SA-358 304~~
	~~SA-53 Gr.A~~
~~Fitting/flange~~	~~SA-53 Gr.A~~
	~~SA-312 TP304~~
	~~SA-358 304~~
	~~SA-106 Gr.B~~
	~~SA-312 TP316~~
	~~SA-479 TP316 or SA-182F316~~
	~~SA-105 or equal~~
	~~SA-479 TP304 or SA-182 F304~~

	~~SA-182 F304~~
	~~SA-105 or equal~~
	~~SA-182 F316~~
	~~SA-181 Gr.70~~
~~Plate~~	~~SA-240, TP 304, 304L, and 316L~~
	~~SA-285 Gr. A and C~~
	~~SA-36~~
	~~SA-515 Gr. 60, 70~~
	~~SA-516 Gr. 60, 70~~
	~~SA-615 Gr. 60~~
	~~SA-537 Class 1~~
	~~SB-171 Gr. CDA 706~~
	~~ASTM A 515 Gr. 70~~
~~Shapes~~	~~SA-36~~
	~~ASTM A-36~~
	~~ASTM A-500 Gr. B (Code Case N71-18 in accordance with the conditions of RG 1.84)~~
~~Bolt/nuts/studs/pins~~	~~SA-193 Gr. B5, B6, B7, B8, and B8M~~
	~~SA-194, Gr. 2H, 8H, 8M, 7, 4, 6, and B8~~
	~~SA-307 Gr. B~~
	~~SA-320 Gr. L7~~
	~~SA-325 Type 1~~
	~~SA-453 Gr. 660A and 660B~~

~~Table 6.1-1 Principle Engineered Safety Feature Pressure Retaining Material Specifications (Sheet 5 of 5)~~

~~ESF Component~~	~~Material Specification~~
~~Casting~~	~~SA-216 Gr. WCB and WCC~~
	~~SA-217 Gr. WC9~~
	~~SA-351 Gr. CF8, CF8M and CF3M~~
	~~SA-487 Gr. CA6NM~~
	~~SB-61~~
	~~SB-62 GR. CDA 836~~
	~~SB-148 Gr. CA 952~~
	~~ASTM A276 TP410~~
~~Forging~~	~~SA-105~~
	~~SA-182, TP F304, F304L, F316, and F316L; Gr. F11, F22 and FXM-19~~
	~~SA-240 TP 304, 316 and 316L~~

	~~SA-350 Gr. LF1 and LF2~~
	~~SA-479, TP 304, 304L, 316, XM-19~~
~~Bars~~	~~SA-479, TP 304, 316 and 410 Gr. 316L and F316~~
	~~SA-564 Gr. 630~~
~~Weld rod~~	~~SFA 5.1, E 6010 and E7018~~
	~~SFA 5.4, E-308-16, E 308L-16, E 309, E316L~~
	~~SFA 5.9, ER 308, ER 308L, ER 309, ER316L~~
	~~SFA 5.17, EM 12K~~
	~~SFA 5.18, E 70S-2, E 70S-3, E 70S-4, E70S-6, and E 70S-1B~~
	~~SFA 5.20, E 70T-1 and 70T-5~~

Table 6.1-2 Principle Engineered Safety Features Materials Exposed to Core Coolant and Containment Spray (Sheet 1 of 2)

ESF Component	Material	Class, Grade or Type
Containment		
Containment Vessel Liner	SA-516	Gr. 60, 70
Penetrations		
Plate	SA-516	Gr. 60, 70
	SA-537	Cl. 1
	SA-240	Type 304
Pipe	SA-106	Gr. A, B
	SA-312	Gr. TP304, TP304L
	SA-358	Gr. 304, 304L
Flued Head	SA-266	Gr. 3
	SA-336	Gr. F22
	SA-182	Gr. F22, F304, F304L
Containment Spray System		
Piping		
Class 1 Piping	See Table 5.2.3-1	
Class 2 Piping	SA-312	Gr. TP304, TP304L
	SA-358	Gr. 304, 304L
Valve		
Class 1 Valves	See Table 5.2.3-1	
Class 2 Valves	The material for Class 2 valves are the same as Class 1. See Table 5.2.3-1	
Fitting / Flange	SA-312	Gr. TP304, TP304L
	SA-358	Gr. 304, 304L
	SA-182	Gr. F304, F304L
	SA-479	Type 304, 304L
Emergency Core Cooling System		
Accumulator		
Pressure plates	SA-516	Gr. 60, 70
Pressure forgings	SA-105	-
	SA-182	Gr. F304, F304L, F316, F316L
	SA-350	Gr. LF1, LF2
Internal parts	SA-240	Type 304, 304L, 316, 316L
	SA-182	Gr. F304, F304L, F316, F316L
Pipes	SA-312	Gr. TP304, TP304L, TP316, TP316L
Closure bolts	SA-193	Gr. B6, B7, B8, B16
Closure nuts	SA-194	Gr. 2, 2H, 4, 8, 8M, 16

Table 6.1-2 Principle Engineered Safety Features Materials Exposed to Core Coolant Water and Containment Spray (Sheet 2 of 2)

ESF Component	Material	Class, Grade or Type
Piping		
Class 1 Piping	See Table 5.2.3-1	
Class 2 Piping	SA-312	Gr. TP304, TP304L
	SA-358	Gr. 304, 304L
Valves		
Class 1 Valves	See Table 5.2.3-1	
Class 2 Valves	The material for Class 2 valves are the same as Class 1. See Table 5.2.3-1	
RWSP	ASTM A 572	Gr. 60
	ASTM A 240	Gr. TP304L
Fitting / Flange	SA-312	Gr. TP304, TP304L
	SA-358	Gr. 304, 304L
	SA-182	Gr. F304, F304L
	SA-479	Type 304, 304L
ESF Filter System		
	See Subsection 6.5.1.7	
Weld Filler Material		
	SFA-5.1	E6018, E7018, E6016, E7016
	SFA-5.4	E308-16, E309-16, E308L-16, E309L-16
	SFA-5.5	E9018-B3, E9016-B3
	SFA-5.9	ER308, ER309, ER308L
	SFA-5.18	ER70S-2, ER70S-3, ER70S-4, ER70S-6, ER70S-G
	SFA-5.22	E309LT1-1/4, E308LT1-1/4
	SFA-5.28	ER90S-B3

~~ESF Component~~	~~Material Specification~~
~~Safety Injection System, Containment Spray System~~	
~~Piping/Tubing~~	~~SA-106, Gr. B and C~~
	~~SA-155 Gr. KC70 Class 1 and 70 Class 1~~
	~~SA-213, TP 304, 304L, and 316~~
	~~SA-249, TP 304L~~
	~~SA-312, TP 304 and 304L~~
	~~SA-333 Gr. 1 and 6~~

	~~SA-376, TP 304 and 316~~
	~~SB-111 Gr. CDA 706~~
	~~SB-466 Gr. CDA 706~~
	~~SB-167 UNS N06690~~
	~~SA 358 TP 304, 304L, 316L~~
~~**Fittings/flanges**~~	~~SA-105~~
	~~SA-181, Gr. I and II~~
	~~SA-182, TP F304, F304L, F316, and F316L~~
	~~SA-234 Gr. WPB, WPBW, WPCW, and WPC~~
	~~SA-403, WP 304, 304L, 304W, and 304LW~~
	~~SA-420 Gr. WPL6~~
	~~SA-479, TP 304, 304L, and 316~~
~~**Plate**~~	~~SA-240, TP 304, 304L, and 316L~~
	~~SA-285 Gr. A and C~~
	~~SA-36~~
	~~SA-515 Gr. 60, 70~~
	~~SA-516 Gr. 60, 70~~
	~~SA-615 Gr. 60~~
	~~SA-537 Class 1~~
	~~SB-171 Gr. CDA 706~~
	~~ASTM A 515 Gr. 70~~
~~**Shapes**~~	~~SA-36~~
	~~ASTM A-36~~
	~~ASTM A-500 Gr. B (Code Case N71-18 in accordance with the conditions of RG 1.84)~~
~~**Bolts/nuts/studs/pins**~~	~~SA-193 Gr. B5, B6, B7, B8, and B8M~~
	~~SA-194, Gr. 2H, 8H, 8M, 7, 4, 6, and B8~~
	~~SA-307 Gr. B~~

~~**Table 6.1-2 Principle Engineered Safety Features Materials Exposed to Core Coolant Water and Containment Spray (Sheet 2 of 2)**~~

~~**ESF Component**~~	~~**Material Specification**~~
	~~SA-320 Gr. L7~~
	~~SA-325 Type 1~~
	~~SA-453 Gr. 660A and 660B~~
	~~SA-564 Gr. 630~~
	~~ASTM A 193 Gr. B7~~
	~~ASTM 194 Gr. 7~~

	~~ASTM A 307~~
	~~ASTM A 354~~
	~~ASTM A 490~~
~~**Bars**~~	~~SA-479, TP 304, 316, 410, 316L, and F316~~
	~~SA-564 Gr. 630~~
	~~ASTM A 108 Gr. 1018 CW (Code Case N71-18 in accordance with the conditions of RG 1.84)~~
~~**Forgings**~~	~~SA-105~~
	~~SA-181 Gr 70~~
	~~SA-182, TP F304, F304L, F316 and F316L; Gr. F11 and F22~~
	~~SA-240, TP 304 and 316~~
	~~SA-350 Gr. LF1 and LF2~~
	~~SA-479, TP 304, 304L and 316~~
	~~ASTM A 668 Class C (Code Case N71-18 in accordance with the conditions of RG 1.84)~~
~~**Castings**~~	~~SA-216 Gr. WCB and WCC~~
	~~SA-217 Gr. WC9~~
	~~SA-351 GR. CF8, CF8M and CF3M~~
	~~SA-487 Gr. CA6NM~~
	~~SB-61~~
	~~SB-62 Gr. CDA 836~~
	~~SB-148 Gr. CA 952~~
	~~ASTM A 276 TP 410~~
	~~ASTM A-216 Gr. WCB~~

~~Table 6.1-2 Principle Engineered Safety Features Materials Exposed to Core Coolant Water and Containment Spray (Sheet 2 of 2)~~

~~ESF Component~~	~~Material Specification~~
	~~SA-320 Gr. L7~~
	~~SA-325 Type 1~~
	~~SA-453 Gr. 660A and 660B~~
	~~SA-564 Gr. 630~~
	~~ASTM A 193 Gr. B7~~
	~~ASTM 194 Gr. 7~~
	~~ASTM A 307~~
	~~ASTM A 354~~
	~~ASTM A 490~~
~~Bars~~	~~SA-479, TP 304, 316, 410, 316L, and F316~~
	~~SA-564 Gr. 630~~
	~~ASTM A 108 Gr. 1018 CW (Code Case N71-18 in accordance with the conditions of RG 1.84)~~
~~Forgings~~	~~SA-105~~
	~~SA-181 Gr 70~~
	~~SA-182, TP F304, F304L, F316 and F316L; Gr. F11 and F22~~
	~~SA-240, TP 304 and 316~~
	~~SA-350 Gr. LF1 and LF2~~
	~~SA-479, TP 304, 304L and 316~~
	~~ASTM A 668 Class C (Code Case N71-18 in accordance with the conditions of RG 1.84)~~
~~Castings~~	~~SA-216 Gr. WCB and WCC~~
	~~SA-217 Gr. WC9~~
	~~SA-351 GR. CF8, CF8M and CF3M~~
	~~SA-487 Gr. CA6NM~~
	~~SB-61~~
	~~SB-62 Gr. CDA 836~~
	~~SB-148 Gr. CA 952~~
	~~ASTM A 276 TP 410~~
	~~ASTM A-216 Gr. WCB~~

- Net Positive Suction Head associated with total strainer head loss, hydraulic head loss of the equipment and piping, including uncertainty margins

- Upstream effects including hold up volumes conservative drainage flow path and capacity assumptions

- Downstream effects potentially impacting the safety functions associated with pumps, valves, heat exchangers, instrumentation (sensing lines and flow measuring devices), spray nozzles, reactor vessel flow paths. Evaluation of downstream effects is described in the report "Sump Strainer Downstream Effects" (Ref: 6.2-36). As for instrumentation, all connections, by design are either at the horizontal or above.

Insulation is a purchased product and its use is controlled to meet the parameters provided in the US-APWR Sump Strainer Performance document (Ref: 6.2-34).

The available and required NPSH at the inlet of the CS/RHR and SI pumps are provided in Table 6.2.2-1. Thus, adequate NPSH is provided to the CS/RHR and SI pumps, including margin.

Table 6.2.2-1 presents values used in the calculations described above.

Programmatic controls will be established to ensure potential sources of debris introduced into containment (e.g., insulation, coatings, foreign material), and plant modifications will not adversely impact the ECC/CS recirculation function. Programmatic control will be established consistent with guidance provided in RG 1.82, Rev. 3 to ensure that potential quantities of post-accident debris are maintained within the bounds of the analyses and design bases that support Emergency Core Cooling (ECC) and Containment Spray (CS) recirculation functions and ensure the long term core cooling requirements of 10 CFR 50.46 are met. The following is a summary of the programmatic controls that will be implemented to ensure that activities are conducted in a manner that ensures ECC/CS strainer operation, and limits the quantity of latent (unintended dirt, dust, paint chips, and fibers) and miscellaneous (tape, tags, stickers) debris inside containment:

- Preparation of a cleanliness, housekeeping and foreign materials exclusion program. This program addresses latent and miscellaneous debris inside containment. An acceptance criterion below the conservative assumption of 200 lb for latent debris inside containment will be established consistent with MUAP-08001-P. Sump Strainer Performance Evaluation (Ref.6.2-34). The program will also ensure that the quantity of miscellaneous debris will be limited such that the 200 ft^2 strainer surface area per sump uncertainty per MUAP-08001-P will be met to ensure ECC/CS strainer operation. A cleanliness, housekeeping and foreign materials exclusion program will be established by the COL Applicant.

- Procedures will be implemented to ensure administrative controls and regulatory/quality requirements for plant modifications and temporary changes that include consideration of materials introduced into the containment that could

Table 6.2.4-2 Associated Containment Isolation Configurations

System	Description	Isolation Configuration (Figure 6.2.4-1)	Closed System Outside Containment	Protected From Missiles	Seismic Category and Equipment Class	Temperature / Pressure Rating at least equal to Containment	Remarks
GDC 55							
RHRS	Hot Leg CS/RHR Pump Suction Line	Sheet 12	Yes	Yes	I, 2	Yes	Inboard isolation valve locked closed
GDC 56							
SIS	SI Pump Suction Line	Sheet 11	Yes	Yes	I, 2	Yes	Remote Manual Motor Operated Valve
CSS	RWSP CS/RHR Pump Suction Line	Sheet 18	Yes	Yes	I, 2	Yes	Remote Manual Motor Operated Valve
CSS	Containment Pressure Instrument Line	Sheet 17	Yes	Yes	I, 2	Yes	Sensor is of sealed bellows type and protective case surrounds sensor and instrument
LTS	Local Pressure Indicator pressure detection line	Sheet 47	No	No	I, 2	Yes	Blank flanged on both Inboard and outboard portion of line
N/A	Oil Supply and Drain Line for RCP Motor	Sheet 48	No	No	I, 2	Yes	Blank flanged on both Inboard and outboard portion of line
N/A	Personnel Airlock	Sheet 49	No	No	I, 2	Yes	Containment pressure aids in seating both Inboard and outboard flanged portions of airlock
N/A	Equipment Hatch	Sheet 50	No	No	I, 2	Yes	Containment pressure aids in seating hatch flange
N/A	Electric Penetration	Sheet 51	No	No	I, 2	Yes	
N/A	Spare Penetration	Sheet 52	No	No	I, 2	Yes	

Table 6.2.4-3 List of Containment Penetrations and System Isolation Positions (Sheet 1 of 12)

Pen NO.	GDC	System Name	Fluid	Line Size (in.)	ESF or Support System	Valve Arragmt Figure 6.2.4-1	Valve Number	Location of Valve	Type Tests	Type C Test	Length of Pipe (Note 1)	Valve Type	Valve Operator	Actuation Mode Primary	Actuation Mode Secondary	Valve Position Normal	Valve Position Shutdown	Valve Position Post-Accident	Power Failure	Actuation Signal	Valve Closure Time	Power Source (Note 2)	Remark
P247	56	RCS	Nitrogen	1	No	Sht. 2	RCS-VLV-133	In	C	Y	-	Check	Self	Auto	None	-	-	-	NA	NA	NA	NA	
			Gas	1			RCS-AOV-132	Out			9.0 ft	Dia	Air	Auto	RM	O	C	C	FC	T	15	1E	
				3/4			RCS-VLV-167	In			-	Dia	Manual	Manual	None	C	C	C	NA	NA	NA	NA	
P260	56	RCS	Demi.	3	No	Sht. 3	RCS-VLV-139	In	C	Y	-	Check	Self	Auto	None	-	-	-	NA	NA	NA	NA	
			Water	3			RCS-VLV-140	In			-	Dia	Manual	Manual	None	C	C	C	NA	NA	NA	NA	
				3			RCS-AOV-138	Out			10.0 ft	Globe	Air	Auto	RM	O	C	C	FC	T	15	1E	
				3/4			RCS-VLV-171	In			-	Dia	Manual	Manual	None	C	C	C	NA	NA	NA	NA	
P276L	56	RCS	Nitrogen	3/4	No	Sht. 4	RCS-AOV-147	In	C	Y	-	Globe	Air	Auto	RM	O	C	C	FC	T	15	1E	
			Gas	3/4			RCS-AOV-148	Out			10.0 ft	Globe	Air	Auto	RM	C	C	C	FC	T	15	1E	
P277	55	CVCS	Primary	4	No	Sht. 5	CVS-AOV-005	In	C	Y	-	Globe	Air	Auto	RM	O	O	C	FC	T	20	1E	
			Coolant	4			CVS-AOV-006	Out			14.0 ft	Globe	Air	Auto	RM	O	O	C	FC	T	20	1E	
P278	55	CVCS	Primary	4	No	Sht. 6	CVS-VLV-153	In	C	Y	-	Check	Self	Auto	None	-	-	-	NA	NA	NA	NA	
			Coolant	4			CVS-MOV-152	Out			14.0 ft	Gate	Motor	Auto	RM	O	O	C	FAI	S	20	1E	
				3/4			CVS-VLV-653	In			-	Globe	Manual	Manual	None	C	C	C	NA	NA	NA	NA	
P279	56	CVCS	Primary	1 1/2	No	Sht. 7	CVS-VLV-179B	In	C	Y	-	Check	Self	Auto	None	-	-	-	NA	NA	NA	NA	
			Coolant	1 1/2			CVS-MOV-178B	Out			14.0 ft	Globe	Motor	RM	Manual	O	O	O	FAI	RM	15	1E	
				3/4			CVS-VLV-667B	In			-	Globe	Manual	Manual	None	C	C	C	NA	NA	NA	NA	
P280	56	CVCS	Primary	1 1/2	No	Sht. 7	CVS-VLV-179D	In	C	Y	-	Check	Self	Auto	None	-	-	-	NA	NA	NA	NA	
			Coolant	1 1/2			CVS-MOV-178D	Out			14.0 ft	Globe	Motor	RM	Manual	O	O	O	FAI	RM	15	1E	
				3/4			CVS-VLV-667D	In			-	Globe	Manual	Manual	None	C	C	C	NA	NA	NA	NA	
P281	56	CVCS	Primary	1 1/2	No	Sht. 7	CVS-VLV-179A	In	C	Y	-	Check	Self	Auto	None	-	-	-	NA	NA	NA	NA	
			Coolant	1 1/2			CVS-MOV-178A	Out			14.0 ft	Globe	Motor	RM	Manual	O	O	O	FAI	RM	15	1E	
				3/4			CVS-VLV-667A	In			-	Globe	Manual	Manual	None	C	C	C	NA	NA	NA	NA	
P282	56	CVCS	Primary	1 1/2	No	Sht. 7	CVS-VLV-179C	In	C	Y	-	Check	Self	Auto	None	-	-	-	NA	NA	NA	NA	
			Coolant	1 1/2			CVS-MOV-178C	Out			14.0 ft	Globe	Motor	RM	Manual	O	O	O	FAI	RM	15	1E	
				3/4			CVS-VLV-667C	In			-	Globe	Manual	Manual	None	C	C	C	NA	NA	NA	NA	
P283	55	CVCS	Primary	3	No	Sht. 8	CVS-MOV-203	In	C	Y	-	Globe	Motor	Auto	RM	O	O	C	FAI	P,T+UV	15	1E	
			Coolant	3			CVS-MOV-204	Out			9.0 ft	Globe	Motor	Auto	RM	O	O	C	FAI	P,T+UV	15	1E	
				3/4			CVS-VLV-202	In			-	Check	Self	Auto	None	-	-	-	NA	NA	NA	NA	
P236	56	SIS	Nitrogen	1	No	Sht. 9	SIS-VLV-115	In	C	Y	-	Check	Self	Auto	None	-	-	-	NA	NA	NA	NA	
			Gas	1			SIS-AOV-114	Out			9.0 ft	Globe	Air	Auto	RM	C	C	C	FC	T	15	1E	
				3/4			SIS-VLV-156	In			-	Globe	Manual	Manual	None	C	C	C	NA	NA	NA	NA	
P210	55	SIS	Borated	4	Yes	Sht. 10	SIS-VLV-010A	In	~~C~~A	~~Y~~N	-	Check	Self	Auto	None	-	-	-	NA	NA	NA	NA	Note 4
			Water	4			SIS-MOV-009A	Out			9.0 ft	Globe	Motor	RM	Manual	O	O	O	FAI	RM	20	1E	
				3/4			SIS-VLV-058A	In			-	Globe	Manual	Manual	None	C	C	C	NA	NA	NA	NA	
P227	55	SIS	Borated	4	Yes	Sht. 10	SIS-VLV-010B	In	~~C~~A	~~Y~~N	-	Check	Self	Auto	None	-	-	-	NA	NA	NA	NA	Note 4
			Water	4			SIS-MOV-009B	Out			9.0 ft	Globe	Motor	RM	Manual	O	O	O	FAI	RM	20	1E	
				3/4			SIS-VLV-058B	In			-	Globe	Manual	Manual	None	C	C	C	NA	NA	NA	NA	
P258	55	SIS	Borated	4	Yes	Sht. 10	SIS-VLV-010C	In	~~C~~A	~~Y~~N	-	Check	Self	Auto	None	-	-	-	NA	NA	NA	NA	Note 4
			Water	4			SIS-MOV-009C	Out			9.0 ft	Globe	Motor	RM	Manual	O	O	O	FAI	RM	20	1E	
				3/4			SIS-VLV-058C	In			-	Globe	Manual	Manual	None	C	C	C	NA	NA	NA	NA	

Table 6.2.4-3 List of Containment Penetrations and System Isolation Positions (Sheet 2 of 12)

Pen NO.	GDC	System Name	Fluid	Line Size (in.)	ESF or Support System	Valve Arragmt Figure 6.2.4-1	Valve Number	Location of Valve	Type Tests	Type C Test	Length of Pipe (Note 1)	Valve Type	Valve Operator	Actuation Mode Primary	Actuation Mode Secondary	Valve Position Normal	Valve Position Shutdown	Valve Position Post-Accident	Power Failure	Actuation Signal	Valve Closure Time	Power Source (Note 2)	Remark
P274	55	SIS	Borated	4	Yes	Sht. 10	SIS-VLV-010D	In	~~C~~A	~~Y~~N	-	Check	Self	Auto	None	-	-	-	NA	NA	NA	NA	Note 4
			Water	4			SIS-MOV-009D	Out			9.0 ft	Globe	Motor	RM	Manual	O	O	O	FAI	RM	20	1E	
				3/4			SIS-VLV-058D	In			-	Globe	Manual	Manual	None	C	C	C	NA	NA	NA	NA	
P152	56	SIS	Borated Water	10	Yes	Sht. 11	SIS-MOV-001A	Out	A	N	39.0 ft	Gate	Motor	RM	Manual	O	O	O	FAI	RM	50	1E	Note 4 Note 7
P153	56	SIS	Borated Water	10	Yes	Sht. 11	SIS-MOV-001B	Out	A	N	39.0 ft	Gate	Motor	RM	Manual	O	O	O	FAI	RM	50	1E	Note 4 Note 7
P156	56	SIS	Borated Water	10	Yes	Sht. 11	SIS-MOV-001C	Out	A	N	39.0 ft	Gate	Motor	RM	Manual	O	O	O	FAI	RM	50	1E	Note 4 Note 7
P157	56	SIS	Borated Water	10	Yes	Sht. 11	SIS-MOV-001D	Out	A	N	39.0 ft	Gate	Motor	RM	Manual	O	O	O	FAI	RM	50	1E	Note 4 Note 7
P209	55	RHRS	Borated	10	No	Sht. 12	RHS-MOV-002A	In	A	N	-	Gate	Motor	RM	Manual	C	O	C	FAI	RM	50	1E	Note 4
			Water	6			RHS-SRV-003A	In			-	Relief	Self	Auto	None	C	C	C	NA	NA	NA	NA	Note 6
				3/4			SIS-VLV-225A	In			-	Globe	Manual	Manual	None	C	C	C	NA	NA	NA	NA	
P226	55	RHRS	Borated	10	No	Sht. 12	RHS-MOV-002B	In	A	N	-	Gate	Motor	RM	Manual	C	O	C	FAI	RM	50	1E	Note 4
			Water	6			RHS-SRV-003B	In			-	Relief	Self	Auto	None	C	C	C	NA	NA	NA	NA	Note 6
				3/4			SIS-VLV-225B	In			-	Globe	Manual	Manual	None	C	C	C	NA	NA	NA	NA	
P257	55	RHRS	Borated	10	No	Sht. 12	RHS-MOV-002C	In	A	N	-	Gate	Motor	RM	Manual	C	O	C	FAI	RM	50	1E	Note 4
			Water	6			RHS-SRV-003C	In			-	Relief	Self	Auto	None	C	C	C	NA	NA	NA	NA	Note 6
				3/4			SIS-VLV-225C	In			-	Globe	Manual	Manual	None	C	C	C	NA	NA	NA	NA	
P273	55	RHRS	Borated	10	No	Sht. 12	RHS-MOV-002D	In	A	N	-	Gate	Motor	RM	Manual	C	O	C	FAI	RM	50	1E	Note 4
			Water	6			RHS-SRV-003D	In			-	Relief	Self	Auto	None	C	C	C	NA	NA	NA	NA	Note 6
				3/4			SIS-VLV-225D	In			-	Globe	Manual	Manual	None	C	C	C	NA	NA	NA	NA	
P212	55	RHRS	Borated	8	Yes	Sht. 13	RHS-VLV-022A	In	~~C~~A	~~Y~~N	-	Check	Self	Auto	None	-	-	-	NA	NA	NA	NA	Note 4
			Water	8			RHS-MOV-021A	Out			11.0 ft	Gate	Motor	RM	Manual	C	O	O	FAI	RM	40	1E	
				3/4			RHS-VLV-062A	In			-	Globe	Manual	Manual	None	C	C	C	NA	NA	NA	NA	
P225	55	RHRS	Borated	8	Yes	Sht. 13	RHS-VLV-022B	In	~~C~~A	~~Y~~N	-	Check	Self	Auto	None	-	-	-	NA	NA	NA	NA	Note 4
			Water	8			RHS-MOV-021B	Out			11.0 ft	Gate	Motor	RM	Manual	C	O	O	FAI	RM	40	1E	
				3/4			RHS-VLV-062B	In			-	Globe	Manual	Manual	None	C	C	C	NA	NA	NA	NA	
P259	55	RHRS	Borated	8	Yes	Sht. 13	RHS-VLV-022C	In	~~C~~A	~~Y~~N	-	Check	Self	Auto	None	-	-	-	NA	NA	NA	NA	Note 4
			Water	8			RHS-MOV-021C	Out			11.0 ft	Gate	Motor	RM	Manual	C	O	O	FAI	RM	40	1E	
				3/4			RHS-VLV-062C	In			-	Globe	Manual	Manual	None	C	C	C	NA	NA	NA	NA	
P272	55	RHRS	Borated	8	Yes	Sht. 13	RHS-VLV-022D	In	~~C~~A	~~Y~~N	-	Check	Self	Auto	None	-	-	-	NA	NA	NA	NA	Note 4
			Water	8			RHS-MOV-021D	Out			11.0 ft	Gate	Motor	RM	Manual	C	O	O	FAI	RM	40	1E	
				3/4			RHS-VLV-062D	In			-	Globe	Manual	Manual	None	C	C	C	NA	NA	NA	NA	
P501	57	FWS	Secondary	16	Yes	Sht. 14	FWS-SMV-512A	Out	A	N	37.0 ft	Gate	S/M	Auto	RM	O	O	C	FC	S,RCPS	5	1E	Note 5
			Coolant	3			EFS-MOV-019A	Out			-	Gate	Motor	Auto	RM	O	O	O	FAI	RCPS	15	1E	
P502	57	FWS	Secondary	16	Yes	Sht. 14	FWS-SMV-512B	Out	A	N	34.0 ft	Gate	S/M	Auto	RM	O	O	C	FC	S,RCPS	5	1E	Note 5
			Coolant	3			EFS-MOV-019B	Out			-	Gate	Motor	Auto	RM	O	O	O	FAI	RCPS	15	1E	
P503	57	FWS	Secondary	16	Yes	Sht. 14	FWS-SMV-512C	Out	A	N	34.0 ft	Gate	S/M	Auto	RM	O	O	C	FC	S,RCPS	5	1E	Note 5
			Coolant	3			EFS-MOV-019C	Out			-	Gate	Motor	Auto	RM	O	O	O	FAI	RCPS	15	1E	
P504	57	FWS	Secondary	16	Yes	Sht. 14	FWS-SMV-512D	Out	A	N	37.0 ft	Gate	S/M	Auto	RM	O	O	C	FC	S,RCPS	5	1E	Note 5
			Coolant	3			EFS-MOV-019D	Out			-	Gate	Motor	Auto	RM	O	O	O	FAI	RCPS	15	1E	

Table 6.2.4-3 List of Containment Penetrations and System Isolation Positions (Sheet 4 of 12)

Pen NO.	GDC	System Name	Fluid	Line Size (in.)	ESF or Support System	Valve Arragmt Figure 6.2.4-1	Valve Number	Location of Valve	Type Tests	C Type Test	Length of Pipe (Note 1)	Valve Type	Valve Operator	Actuation Mode Primary	Actuation Mode Secondary	Valve Position Normal	Valve Position Shutdown	Valve Position Post-Accident	Power Failure	Actuation Signal	Valve Closure Time	Power Source (Note 2)	Remark
P512	57	MSS	Secondary Coolant	32	Yes	Sht. 15	MSS-SMV-515D	Out	A	N	68.0 ft	Gate	S/M	Auto	RM	O	C	C	FC	RCPS	5	1E	Note 5
				6			MSS-MOV-507D	Out			-	Gate	Motor	RM	Manual	O	O	O	FAI	RM	30	1E	
				6			EFS-MOV-101D	Out			-	Gate	Motor	RM	Manual	O	O	O	FAI	RM	30	1E	
				6			MSS-SRV-509D	Out			-	Relief	Self	Auto	None	C	C	C	NA	NA	NA	NA	
				6			MSS-SRV-510D	Out			-	Relief	Self	Auto	None	C	C	C	NA	NA	NA	NA	
				6			MSS-SRV-511D	Out			-	Relief	Self	Auto	None	C	C	C	NA	NA	NA	NA	
				6			MSS-SRV-512D	Out			-	Relief	Self	Auto	None	C	C	C	NA	NA	NA	NA	
				6			MSS-SRV-513D	Out			-	Relief	Self	Auto	None	C	C	C	NA	NA	NA	NA	
				6			MSS-SRV-514D	Out			-	Relief	Self	Auto	None	C	C	C	NA	NA	NA	NA	
				4			MSS-HCV-595	Out			-	Globe	Air	Auto	RM	C	C	C	FC	RCPS	20	1E	
				2			MSS-MOV-701D	Out			-	Globe	Motor	RM	Manual	O	O	O	FAI	RM	15	1E	
				3/4			MSS-VLV-533D	Out			-	Globe	Manual	Manual	None	C	C	C	NA	NA	NA	NA	
P214	56	CSS	Borated Water	8	Yes	Sht. 16	CSS-VLV-005A	In	~~C~~A	~~Y~~N	-	Check	Self	Auto	None	-	-	-	NA	NA	NA	NA	Note 4
				8			CSS-MOV-004A	Out			9.0 ft	Gate	Motor	Auto	RM	C	C	O	FAI	P	40	1E	~~Note 8~~
				3/4			CSS-VLV-023A	In			-	Globe	Manual	Manual	None	C	C	C	NA	NA	NA	NA	
P224	56	CSS	Borated Water	8	Yes	Sht. 16	CSS-VLV-005B	In	~~C~~A	~~Y~~N	-	Check	Self	Auto	None	-	-	-	NA	NA	NA	NA	Note 4
				8			CSS-MOV-004B	Out			9.0 ft	Gate	Motor	Auto	RM	C	C	O	FAI	P	40	1E	~~Note 8~~
				3/4			CSS-VLV-023B	In			-	Globe	Manual	Manual	None	C	C	C	NA	NA	NA	NA	
P261	56	CSS	Borated Water	8	Yes	Sht. 16	CSS-VLV-005C	In	~~C~~A	~~Y~~N	-	Check	Self	Auto	None	-	-	-	NA	NA	NA	NA	Note 4
				8			CSS-MOV-004C	Out			9.0 ft	Gate	Motor	Auto	RM	C	C	O	FAI	P	40	1E	~~Note 8~~
				3/4			CSS-VLV-023C	In			-	Globe	Manual	Manual	None	C	C	C	NA	NA	NA	NA	
P271	56	CSS	Borated Water	8	Yes	Sht. 16	CSS-VLV-005D	In	~~C~~A	~~Y~~N	-	Check	Self	Auto	None	-	-	-	NA	NA	NA	NA	Note 4
				8			CSS-MOV-004D	Out			9.0 ft	Gate	Motor	Auto	RM	C	C	O	FAI	P	40	1E	~~Note 8~~
				3/4			CSS-VLV-023D	In			-	Globe	Manual	Manual	None	C	C	C	NA	NA	NA	NA	
P151	56	CSS	Borated Water	14	Yes	Sht. 18	CSS-MOV-001A	Out	A	N	39.0 ft	Gate	Motor	RM	Manual	O	C	O	FAI	RM	60	1E	Note 4 Note 7
P154	56	CSS	Borated Water	14	Yes	Sht. 18	CSS-MOV-001B	Out	A	N	39.0 ft	Gate	Motor	RM	Manual	O	C	O	FAI	RM	60	1E	Note 4 Note 7
P155	56	CSS	Borated Water	14	Yes	Sht. 18	CSS-MOV-001C	Out	A	N	39.0 ft	Gate	Motor	RM	Manual	O	C	O	FAI	RM	60	1E	Note 4 Note 7
P158	56	CSS	Borated Water	14	Yes	Sht. 18	CSS-MOV-001D	Out	A	N	39.0 ft	Gate	Motor	RM	Manual	O	C	O	FAI	RM	60	1E	Note 4 Note 7
P220	56	CSS	Silicone Oil	3/4	Yes	Sht. 17	-	-	A	N	-	-	-	-	-	-	-	-	-	-	-	-	Note 8
P222	56	CSS	Silicone Oil	3/4	Yes	Sht. 17	-	-	A	N	-	-	-	-	-	-	-	-	-	-	-	-	Note 8
P416	56	CSS	Silicone Oil	3/4	Yes	Sht. 17	-	-	A	N	-	-	-	-	-	-	-	-	-	-	-	-	Note 8
P417	56	CSS	Silicone Oil	3/4	Yes	Sht. 17	-	-	A	N	-	-	-	-	-	-	-	-	-	-	-	-	Note 8
P405L	56	CSS	Silicone Oil	3/4	No	Sht. 17	-	-	A	N	-	-	-	-	-	-	-	-	-	-	-	-	Note 8
P234	~~55~~5 6	CCWS	Water with corrosion inhibitor	8	Yes	Sht. 19	NCS-VLV-403A	In	C	Y	-	Check	Self	Auto	None	-	-	-	NA	NA	NA	NA	
				8			NCS-MOV-402A	Out			10.0 ft	Gate	Motor	Auto	RM	O	O	C	FAI	P	40	1E	
				4			NCS-MOV-445A	Out				Globe	Motor	Manual	None	C	C	O	FAI	NA	20	1E	
				3/4			NCS-VLV-452A	In			-	Globe	Manual	Manual	None	C	C	C	NA	NA	NA	NA	
P249	~~55~~5 6	CCWS	Water with corrosion inhibitor	8	Yes	Sht. 19	NCS-VLV-403B	In	C	Y	-	Check	Self	Auto	None	-	-	-	NA	NA	NA	NA	
				8			NCS-MOV-402B	Out			10.0 ft	Gate	Motor	Auto	RM	O	O	C	FAI	P	40	1E	
				4			NCS-MOV-445B	Out				Globe	Motor	Manual	None	C	C	O	FAI	NAI	20	1E	

				3/4			NCS-VLV-452B	In			-	Globe	Manual	Manual	None	C	C	C	NA	NA	NA	NA	

Table 6.2.4-3 List of Containment Penetrations and System Isolation Positions (Sheet 5 of 12)

Pen NO.	GDC	System Name	Fluid	Line Size (in.)	ESF or Support System	Valve Arragmt Figure 6.2.4-1	Valve Number	Location of Valve	Type Tests	Type C Test	Length of Pipe (Note 1)	Valve Type	Valve Operator	Actuation Mode Primary	Actuation Mode Secondary	Valve Position Normal	Valve Position Shutdown	Valve Position Post-Accident	Power Failure	Actuation Signal	Valve Closure Time	Power Source (Note 2)	Remark
P232	~~55~~5 6	CCWS	Water with	8	Yes	Sht. 20	NCS-MOV-436A	In	C	Y	-	Gate	Motor	Auto	RM	O	O	C	FAI	P	40	1E	
			corrosion	8			NCS-MOV-438A	Out			10.0 ft	Gate	Motor	Auto	RM	O	O	C	FAI	P	40	1E	
			inhibitor	4			NCS-MOV-447A	In				Globe	Motor	Manual	None	C	C	O	FAI	NA	20	1E	
				4			NCS-MOV-448A	Out				Globe	Motor	Manual	None	C	C	O	FAI	NA	20	1E	
				3/4			NCS-VLV-437A	In			-	Check	Self	Auto	None	-	-	-	NA	NA	NA	NA	
P251	~~55~~5 6	CCWS	Water with	8	Yes	Sht. 20	NCS-MOV-436B	In	C	Y	-	Gate	Motor	Auto	RM	O	O	C	FAI	P	40	1E	
			corrosion	8			NCS-MOV-438B	Out			10.0 ft	Gate	Motor	Auto	RM	O	O	C	FAI	P	40	1E	
			inhibitor	4			NCS-MOV-447B	In			-	Globe	Motor	Manual	None	C	C	O	FAI	NA	20	1E	
				4			NCS-MOV-448B	Out			-	Globe	Motor	Manual	None	C	C	O	FAI	NA	20	1E	
				3/4			NCS-VLV-437B	In			-	Check	Self	Auto	None	-	-	-	NA	NA	NA	NA	
P233	57	CCWS	Water with	4	No	Sht. 21	NCS-MOV-511	Out	A	N	9.0 ft	Gate	Motor	Auto	RM	O	O	C	FAI	T	20	1E	Note 5
P235	57	CCWS	corrosion	4	No	Sht. 21	NCS-MOV-517	Out	A	N	9.0 ft	Gate	Motor	Auto	RM	C	C	C	FAI	T	20	1E	Note 5
P252	57	CCWS	inhibitor	8	No	Sht. 22	NCS-MOV-531	Out	A	N	9.0 ft	Gate	Motor	Auto	RM	O	O	C	FAI	T	40	1E	Note 5
P250	57	CCWS		8	No	Sht. 22	NCS-MOV-537	Out	A	N	9.0 ft	Gate	Motor	Auto	RM	O	O	C	FAI	T	40	1E	Note 5
P276R	56	WMS	Gas	3/4	No	Sht. 23	LMS-AOV-052	In	C	Y	-	Dia	Air	Auto	RM	O	O	C	FC	T	15	1E	
				3/4			LMS-AOV-053	Out			11.0 ft	Dia	AIr	Auto	RM	C	C	C	FC	T	15	1E	
P284	56	WMS	Gas	2	No	Sht. 24	LMS-AOV-055	In	C	Y	-	Dia	Air	Auto	RM	O	O	C	FC	T	15	1E	
				2			LMS-AOV-056	Out			16.0 ft	Dia	Air	Auto	RM	O	O	C	FC	T	15	1E	
				2			LMS-AOV-060	Out			-	Dia	AIr	Auto	RM	O	O	C	FC	T	15	1E	
P205	56	WMS	Borated	3	No	Sht. 25	LMS-LCV-010A	In	C	Y	-	Dia	Air	Auto	RM	C	C	C	FC	T	15	1E	
			Water	3			LMS-LCV-010B	Out			9.0 ft	Dia	Air	Auto	RM	O	O	C	FC	T	15	1E	
P207	56	WMS	Primary	2	No	Sht. 26	LMS-AOV-104	In	C	Y	-	Dia	Air	Auto	RM	C	C	C	FC	T	15	1E	
			Coolant	2			LMS-AOV-105	Out			9.0 ft	Dia	Air	Auto	RM	C	C	C	FC	T	15	1E	
P267L	55	PSS	Primary	3/4	No	Sht. 27	PSS-AOV-003	In	C	Y	-	Globe	Air	Auto	RM	C	C	C	FC	T	15	1E	
			Coolant	3/4			PSS-MOV-006	In			-	Globe	Motor	Auto	RM	O	O	C	FAI	T	15	1E	
				3/4			PSS-MOV-013	In			-	Globe	Motor	Auto	RM	C	C	C	FAI	T	15	1E	
				3/4			PSS-MOV-031A	Out			14.0 ft	Globe	Motor	Auto	RM	O	O	C	FAI	T	15	1E	
P269R	55	PSS	Primary	3/4	No	Sht. 28	PSS-MOV-023	In	C	Y	-	Globe	Motor	Auto	RM	O	O	C	FAI	T	15	1E	
			Coolant	3/4			PSS-MOV-031B	Out			14.0 ft	Globe	Motor	Auto	RM	O	O	C	FAI	T	15	1E	
P267R	56	PSS	Borated	3/4	No	Sht. 29	PSS-AOV-062A	In	C	Y	-	Globe	Air	Auto	RM	C	C	C	FC	T	15	1E	
			Water	3/4			PSS-AOV-062B	In			-	Globe	Air	Auto	RM	C	C	C	FC	T	15	1E	
				3/4			PSS-AOV-062C	In			-	Globe	Air	Auto	RM	C	C	C	FC	T	15	1E	
				3/4			PSS-AOV-062D	In			-	Globe	Air	Auto	RM	C	C	C	FC	T	15	1E	
				3/4			PSS-AOV-063	Out			13.0 ft	Globe	Air	Auto	RM	O	O	C	FC	T	15	1E	
P270	56	PSS	Containment	3/4	No	Sht. 30	PSS-VLV-072	In	C	Y	-	Check	Self	Auto	None	-	-	-	NA	NA	NA	NA	
			Atmosphere	3/4			PSS-VLV-091	In			-	Globe	Manual	Manual	None	C	C	C	NA	NA	NA	NA	
				3/4			PSS-MOV-071	Out			9.0 ft	Globe	Motor	RM	Manual	C	C	C	FAI	RM	15	1E	
P237R	57	SGBDS	Secondary	3/4	No	Sht. 31	SGS-AOV-031A	Out	A	N	11.0 ft	Globe	Air	Auto	RM	O	O	C	FC	T	15	1E	Note 5
P237L	57	SGBDS	Coolant	3/4	No	Sht. 31	SGS-AOV-031B	Out	A	N	12.0 ft	Globe	Air	Auto	RM	O	O	C	FC	T	15	1E	Note 5

Table 6.2.4-3 List of Containment Penetrations and System Isolation Positions (Sheet 6 of 12)

Pen NO.	GDC	System Name	Fluid	Line Size (in.)	ESF or Support System	Valve Arragmt Figure 6.2.4-1	Valve Number	Location of Valve	Type Tests	Type C Test	Length of Pipe (Note 1)	Valve Type	Valve Operator	Actuation Mode Primary	Actuation Mode Secondary	Valve Position Normal	Valve Position Shutdown	Valve Position Post-Accident	Power Failure	Actuation Signal	Valve Closure Time	Power Source (Note 2)	Remark
P239R	57	SGBDS	Secondary	3/4	No	Sht. 31	SGS-AOV-031C	Out	A	N	11.0 ft	Globe	Air	Auto	RM	O	O	C	FC	T	15	1E	Note 5
P239L	57	SGBDS	Coolant	3/4	No	Sht. 31	SGS-AOV-031D	Out	A	N	12.0 ft	Globe	Air	Auto	RM	O	O	C	FC	T	15	1E	Note 5
P505	57	SGBDS	Secondary	4	No	Sht. 31	SGS-AOV-001A	Out	A	N	22.0 ft	Globe	Air	Auto	RM	O	O	C	FC	T	20	1E	Note 5
P506	57	SGBDS	Coolant	4	No	Sht. 31	SGS-AOV-001B	Out	A	N	26.0 ft	Globe	Air	Auto	RM	O	O	C	FC	T	20	1E	Note 5
P507	57	SGBDS		4	No	Sht. 31	SGS-AOV-001C	Out	A	N	26.0 ft	Globe	Air	Auto	RM	O	O	C	FC	T	20	1E	Note 5
P508	57	SGBDS		4	No	Sht. 31	SGS-AOV-001D	Out	A	N	22.0 ft	Globe	Air	Auto	RM	O	O	C	FC	T	20	1E	Note 5
P161	56	RWS	Borated	6	No	Sht. 32	RWS-MOV-002	In	C	Y	-	Gate	Motor	Auto	RM	O	O	C	FAI	T	30	1E	
			Water	6			RWS-MOV-004	Out			19.0 ft	Gate	Motor	Auto	RM	O	O	C	FAI	T	30	1E	
				3/4			RWS-VLV-003	In			-	Check	Self	Auto	None	-	-	-	NA	NA	NA	NA	
P162	56	RWS	Borated	4	No	Sht. 33	RWS-VLV-023	In	C	Y	-	Check	Self	Auto	None	-	-	-	NA	NA	NA	NA	
			Water	4			RWS-AOV-022	Out			29.0 ft	Dia	Air	Auto	RM	O	O	C	FC	T	20	1E	
				3/4			RWS-VLV-073	In			-	Globe	Manual	Manual	None	C	C	C	NA	NA	NA	NA	
P253	56	PMWS	Deminrralized	2	No	Sht. 34	DWS-VLV-005	In	C	Y	-	Check	Self	Auto	None	-	-	-	NA	NA	NA	NA	
			Water	2			DWS-VLV-004	Out			9.0 ft	Dia	Manual	Manual	None	C	C	C	NA	NA	NA	NA	
				3/4			DWS-VLV-006	In			-	Dia	Manual	Manual	None	C	C	C	NA	NA	NA	NA	
P245	56	IAS	Compressed	2	No	Sht. 35	IAS-VLV-003	In	C	Y	-	Check	Self	Auto	None	-	-	-	NA	NA	NA	NA	
			Air	2			IAS-MOV-002	Out			9.0 ft	Globe	Motor	Auto	RM	O	O	C	FAI	P	15	1E	
				3/4			IAS-VLV-004	In			-	Globe	Manual	Manual	None	C	C	C	NA	NA	NA	NA	
P248	56	FSS	Fire Water	3	No	Sht. 36	FSS-VLV-003	In	C	Y	-	Check	Self	Auto	None	-	-	-	NA	NA	NA	NA	
				3			FSS-AOV-001	Out			9.0 ft	Globe	Air	Auto	RM	C	C	C	FC	T	15	1E	
				3/4			FSS-VLV-002	In			-	Globe	Manual	Manual	None	C	C	C	NA	NA	NA	NA	
P238	56	FSS	Fire Water	6	No	Sht. 37	FSS-VLV-006	In	C	Y	-	Check	Self	Auto	None	-	-	-	NA	NA	NA	NA	
				6			FSS-MOV-004	Out			10.0 ft	Gate	Motor	Auto	RM	C	C	C	FAI	RM	30	1E	
				3/4			FSS-VLV-005	In			-	Globe	Manual	Manual	None	C	C	C	NA	NA	NA	NA	
P230	56	SSAS	Compressed	2	No	Sht. 38	SAS-VLV-103	In	C	Y	-	Check	Self	Auto	None	-	-	-	NA	NA	NA	NA	
			Air	2			SAS-VLV-101	Out			9.0 ft	Globe	Manual	Manual	None	C	C	C	NA	NA	NA	NA	
				3/4			SAS-VLV-102	In			-	Globe	Manual	Manual	None	C	C	C	NA	NA	NA	NA	
P200	-	-	(Fuel Transfer Tube)	22	No	Sht. 39	-	-	B	N	-	Flange	NA	-	-	C	C	C	NA	NA	NA	NA	
P451	56	HVAC	Containment	36	No	Sht. 40	VCS-AOV-305	In	C	Y	-	B-fly	Air	Auto	RM	C	O	C	FC	V	5	1E	
			Atmosphere	36			VCS-AOV-304	Out			13.0 ft	B-fly	Air	Auto	RM	C	O	C	FC	V	5	1E	
P452	56	HVAC	Containment	36	No	Sht. 40	VCS-AOV-306	In	C	Y	-	B-fly	Air	Auto	RM	C	O	C	FC	V	5	1E	
			Atmosphere	36			VCS-AOV-307	Out			9.0 ft	B-fly	Air	Auto	RM	C	O	C	FC	V	5	1E	
P410	56	HVAC	Containment	8	No	Sht. 41	VCS-AOV-356	In	C	Y	-	B-fly	Air	Auto	RM	C	C	C	FC	V	5	1E	
			Atmosphere	8			VCS-AOV-357	Out			10.0 ft	B-fly	Air	Auto	RM	C	C	C	FC	V	5	1E	
P401	56	HVAC	Containment	8	No	Sht. 41	VCS-AOV-355	In	C	Y	-	B-fly	Air	Auto	RM	C	C	C	FC	V	5	1E	
			Atmosphere	8			VCS-AOV-354	Out			10.0 ft	B-fly	Air	Auto	RM	C	C	C	FC	V	5	1E	
P262R	56	HVAC	Silicone Oil	3/4	No	Sht. 42	-	-	A	N	-	-	-	-		-	-	-	-	-	-	-	Note 8
P262L	56	HVAC	Silicone Oil	3/4	No	Sht. 42	-	-	A	N	-	-	-	-		-	-	-	-	-	-	-	Note 8

Table 6.2.4-3 List of Containment Penetrations and System Isolation Positions (Sheet 7 of 12)

Pen NO.	GDC	System Name	Fluid	Line Size (in.)	ESF or Support System	Valve Arragmt Figure 6.2.4-1	Valve Number	Location of Valve	Type Tests	Type C Test	Length of Pipe (Note 1)	Valve Type	Valve Operator	Actuation Mode Primary	Actuation Mode Secondary	Valve Position Normal	Valve Position Shutdown	Valve Position Post-Accident	Power Failure	Actuation Signal	Valve Closure Time	Power Source (Note 2)	Remark
P408	~~57~~5 6	VWS	Chilled	10	No	Sht. 43	VWS-VLV-421	In	~~A~~C	~~N~~Y	-	Check	Self	Auto	None	-	-	-	NA	NA	Na	NA	
			Water	10			VWS-MOV-403	Out			9.0 ft	Gate	Motor	Auto	RM	O	C	C	FAI	T	50	1E	
P409	~~57~~5 6	VWS	Chilled	10	No	Sht. 43	VWS-MOV-422	In	~~A~~C	~~N~~Y	-	Gate	Motor	Auto	RM	O	O	C	FAI	T	50	1E	
			Water	10			VWS-MOV-407	Out			9.0 ft	Gate	Motor	Auto	RM	O	C	C	FAI	T	50	1E	
				3/4			VWS-VLV-423	In			-	Check	Self	Auto	None	-	-	-	NA	NA	NA	NA	
P265	56	RMS	Containment	1	No	Sht. 44	RMS-VLV-005	In	C	Y	-	Check	Self	Auto	None	-	-	-	NA	NA	NA	NA	
			Atmosphere	1			RMS-MOV-003	Out			9.0 ft	Globe	Motor	Auto	RM	O	O	C	FAI	T	15	1E	
				3/4			RMS-VLV-004	in			-	Globe	Manual	Manual	None	C	C	C	NA	NA	NA	NA	
P266	56	RMS	Containment	1	No	Sht. 44	RMS-MOV-001	In	C	Y	-	Globe	Motor	Auto	RM	O	O	C	FAI	T	15	1E	
			Atmosphere	1			RMS-MOV-002	Out			9.0 ft	Globe	Motor	Auto	RM	O	O	C	FAI	T	15	1E	
P231	56	ICIGS	Carbon	3/4	No	Sht. 45	IGS-AOV-002	In	C	Y	-	Dia	Air	Auto	RM	C	C	C	FC	T	15	1E	
			Dioxide	3/4			IGS-AOV-001	Out			9.0 ft	Dia	Air	Auto	RM	C	C	C	FC	T	15	1E	
P405R	56	LTS	Containment	3/4	No	Sht. 47	LTS-VLV-002	In	C	Y	-	Globe	Manual	Manual	None	C	C	C	NA	NA	NA	NA	
			Atmosphere				LTS-VLV-001	Out			9.0 ft	Globe	Manual	Manual	None	C	C	C	NA	NA	NA	NA	
P223	56	LTS	Containment	3/4	No	Sht. 47	-	In	B	N	-	Flange	NA	Manual	None	C	C	C	NA	NA	NA	NA	
			Atmosphere				-	Out			-	Flange	NA	Manual	None	C	C	C	NA	NA	NA	NA	
P216	56	LTS	Containment	3/4	No	Sht. 46	-	In	B	N	-	Flange	NA	Manual	None	C	C	C	NA	NA	NA	NA	
			Atmosphere				-	Out			-	Flange	NA	Manual	None	C	C	C	NA	NA	NA	NA	
P218	56	LTS	Containment	3/4	No	Sht. 46	-	In	B	N	-	Flange	NA	Manual	None	C	C	C	NA	NA	NA	NA	
			Atmosphere				-	Out			-	Flange	NA	Manual	None	C	C	C	NA	NA	NA	NA	
P418R	56	RLS	Containment	1 1/2	No	Sht. 48	-	In	B	N	-	Flange	NA	Manual	None	C	C	C	NA	NA	NA	NA	
			Atmosphere				-	Out			-	Flange	NA	Manual	None	C	C	C	NA	NA	NA	NA	
P418L	56	RLS	Containment	1 1/2	No	Sht. 48	-	In	B	N	-	Flange	NA	Manual	None	C	C	C	NA	NA	NA	NA	
			Atmosphere				-	Out			-	Flange	NA	Manual	None	C	C	C	NA	NA	NA	NA	
P520	56	-	-	-	-	Sht. 49	-	NA	B	N	-	None	None	Manual	Manual	C	C	C	NA	NA	NA	NA	
P530	56	-	-	-	-	Sht. 49	-	NA	B	N	-	None	None	Manual	Manual	C	C	C	NA	NA	NA	NA	
P540	56	-	-	-	-	Sht. 50	-	NA	B	N	-	None	None	Manual	Manual	C	C	C	NA	NA	NA	NA	
P208	-	(Spare)	-	-	-	-Sht. 52	-	-	A	N	-	-	-	-	-	-	-	-	-	-	-	-	
P213	-	(Spare)	-	-	-	-Sht. 52	-	-	A	N	-	-	-	-	-	-	-	-	-	-	-	-	
P215	-	(Spare)	-	-	-	-Sht. 52	-	-	A	N	-	-	-	-	-	-	-	-	-	-	-	-	
P246	-	(Spare)	-	-	-	-Sht. 52	-	-	A	N	-	-	-	-	-	-	-	-	-	-	-	-	
P254	-	(Spare)	-	-	-	-Sht. 52	-	-	A	N	-	-	-	-	-	-	-	-	-	-	-	-	
P268	-	(Spare)	-	-	-	-Sht. 52	-	-	A	N	-	-	-	-	-	-	-	-	-	-	-	-	
P269L	-	(Spare)	-	-	-	-Sht. 52	-	-	A	N	-	-	-	-	-	-	-	-	-	-	-	-	
P275	-	(Spare)	-	-	-	-Sht. 52	-	-	A	N	-	-	-	-	-	-	-	-	-	-	-	-	
P285	-	(Spare)	-	-	-	-Sht. 52	-	-	A	N	-	-	-	-	-	-	-	-	-	-	-	-	
P301	-	(Spare)	-	-	-	-Sht. 52	-	-	A	N	-	-	-	-	-	-	-	-	-	-	-	-	
P406	-	(Spare)	-	-	-	-Sht. 52	-	-	A	N	-	-	-	-	-	-	-	-	-	-	-	-	
P407	-	(Spare)	-	-	-	-Sht. 52	-	-	A	N	-	-	-	-	-	-	-	-	-	-	-	-	
P419	-	(Spare)	-	-	-	-Sht. 52	-	-	A	N	-	-	-	-	-	-	-	-	-	-	-	-	
P420	-	(Spare)	-	-	-	-Sht. 52	-	-	A	N	-	-	-	-	-	-	-	-		-	-	-	

Table 6.2.4-3 List of Containment Penetrations and System Isolation Positions (Sheet 8 of 12)

Pen NO.	GDC	System Name	Fluid	Line Size (in.)	ESF or Support System	Valve Arragmt Figure 6.2.4-1	Valve Number	Location of Valve	Type Tests	Type C Test	Length of Pipe (Note 1)	Valve Type	Valve Operator	Actuation Mode Primary	Actuation Mode Secondary	Valve Position Normal	Valve Position Shutdown	Valve Position Post-Accident	Power Failure	Actuation Signal	Valve Closure Time	Power Source (Note 2)	Remark
E601	-	(Electric)	-	-	-	-Sht. 51	-	-	B	N	-	-	-	-	-	-	-	-	-	-	-	-	
E602	-	(Electric)	-	-	-	-Sht. 51	-	-	B	N	-	-	-	-	-	-	-	-	-	-	-	-	
E603	-	(Electric)	-	-	-	-Sht. 51	-	-	B	N	-	-	-	-	-	-	-	-	-	-	-	-	
E604	-	(Electric)	-	-	-	-Sht. 51	-	-	B	N	-	-	-	-	-	-	-	-	-	-	-	-	
E605	-	(Electric)	-	-	-	-Sht. 51	-	-	B	N	-	-	-	-	-	-	-	-	-	-	-	-	
E606	-	(Electric)	-	-	-	-Sht. 51	-	-	B	N	-	-	-	-	-	-	-	-	-	-	-	-	
E607	-	(Electric)	-	-	-	-Sht. 51	-	-	B	N	-	-	-	-	-	-	-	-	-	-	-	-	
E608	-	(Electric)	-	-	-	-Sht. 51	-	-	B	N	-	-	-	-	-	-	-	-	-	-	-	-	
E609	-	(Electric)	-	-	-	-Sht. 51	-	-	B	N	-	-	-	-	-	-	-	-	-	-	-	-	
E610	-	(Electric)	-	-	-	-Sht. 51	-	-	B	N	-	-	-	-	-	-	-	-	-	-	-	-	
E611	-	(Electric)	-	-	-	-Sht. 51	-	-	B	N	-	-	-	-	-	-	-	-	-	-	-	-	
E612	-	(Electric)	-	-	-	-Sht. 51	-	-	B	N	-	-	-	-	-	-	-	-	-	-	-	-	
E613	-	(Electric)	-	-	-	-Sht. 51	-	-	B	N	-	-	-	-	-	-	-	-	-	-	-	-	
E614	-	(Electric)	-	-	-	-Sht. 51	-	-	B	N	-	-	-	-	-	-	-	-	-	-	-	-	
E615	-	(Electric)	-	-	-	-Sht. 51	-	-	B	N	-	-	-	-	-	-	-	-	-	-	-	-	
E616	-	(Electric)	-	-	-	-Sht. 51	-	-	B	N	-	-	-	-	-	-	-	-	-	-	-	-	
E617	-	(Electric)	-	-	-	-Sht. 51	-	-	B	N	-	-	-	-	-	-	-	-	-	-	-	-	
E620	-	(Electric)	-	-	-	-Sht. 51	-	-	B	N	-	-	-	-	-	-	-	-	-	-	-	-	
E621	-	(Electric)	-	-	-	-Sht. 51	-	-	B	N	-	-	-	-	-	-	-	-	-	-	-	-	
E622	-	(Electric)	-	-	-	-Sht. 51	-	-	B	N	-	-	-	-	-	-	-	-	-	-	-	-	
E623	-	(Electric)	-	-	-	-Sht. 51	-	-	B	N	-	-	-	-	-	-	-	-	-	-	-	-	
E624	-	(Electric)	-	-	-	-Sht. 51	-	-	B	N	-	-	-	-	-	-	-	-	-	-	-	-	
E625	-	(Electric)	-	-	-	-Sht. 51	-	-	B	N	-	-	-	-	-	-	-	-	-	-	-	-	
E627	-	(Electric)	-	-	-	-Sht. 51	-	-	B	N	-	-	-	-	-	-	-	-	-	-	-	-	
E628	-	(Electric)	-	-	-	-Sht. 51	-	-	B	N	-	-	-	-	-	-	-	-	-	-	-	-	
E629	-	(Electric)	-	-	-	-Sht. 51	-	-	B	N	-	-	-	-	-	-	-	-	-	-	-	-	
E630	-	(Electric)	-	-	-	-Sht. 51	-	-	B	N	-	-	-	-	-	-	-	-	-	-	-	-	
E631	-	(Electric)	-	-	-	-Sht. 51	-	-	B	N	-	-	-	-	-	-	-	-	-	-	-	-	
E632	-	(Electric)	-	-	-	-Sht. 51	-	-	B	N	-	-	-	-	-	-	-	-	-	-	-	-	
E633	-	(Electric)	-	-	-	-Sht. 51	-	-	B	N	-	-	-	-	-	-	-	-	-	-	-	-	
E634	-	(Electric)	-	-	-	-Sht. 51	-	-	B	N	-	-	-	-	-	-	-	-	-	-	-	-	
E635	-	(Electric)	-	-	-	-Sht. 51	-	-	B	N	-	-	-	-	-	-	-	-	-	-	-	-	
E636	-	(Electric)	-	-	-	-Sht. 51	-	-	B	N	-	-	-	-	-	-	-	-	-	-	-	-	
E637	-	(Electric)	-	-	-	-Sht. 51	-	-	B	N	-	-	-	-	-	-	-	-	-	-	-	-	
E638	-	(Electric)	-	-	-	-Sht. 51	-	-	B	N	-	-	-	-	-	-	-	-	-	-	-	-	
E639	-	(Electric)	-	-	-	-Sht. 51	-	-	B	N	-	-	-	-	-	-	-	-	-	-	-	-	

Table 6.2.4-3 List of Containment Penetrations and System Isolation Positions (Sheet 9 of 12)

Pen NO.	GDC	System Name	Fluid	Line Size (in.)	ESF or Support System	Valve Arragmt Figure 6.2.4-1	Valve Number	Location of Valve	Type Tests	Type C Test	Length of Pipe (Note 1)	Valve		Actuation Mode		Valve Position			Power Failure	Actuation Signal	Valve Closure Time	Power Source (Note 2)	Remark
												Type	Operator	Primary	Secondary	Normal	Shutdown	Post-Accident					
E650	-	(Electric)	-	-	-	-Sht. 51	-	-	B	N	-	-	-	-	-	-	-	-	-	-	-	-	
E651	-	(Electric)	-	-	-	-Sht. 51	-	-	B	N	-	-	-	-	-	-	-	-	-	-	-	-	
E652	-	(Electric)	-	-	-	-Sht. 51	-	-	B	N	-	-	-	-	-	-	-	-	-	-	-	-	
E653	-	(Electric)	-	-	-	-Sht. 51	-	-	B	N	-	-	-	-	-	-	-	-	-	-	-	-	
E654	-	(Electric)	-	-	-	-Sht. 51	-	-	B	N	-	-	-	-	-	-	-	-	-	-	-	-	
E655	-	(Electric)	-	-	-	-Sht. 51	-	-	B	N	-	-	-	-	-	-	-	-	-	-	-	-	
E656	-	(Electric)	-	-	-	-Sht. 51	-	-	B	N	-	-	-	-	-	-	-	-	-	-	-	-	
E657	-	(Electric)	-	-	-	-Sht. 51	-	-	B	N	-	-	-	-	-	-	-	-	-	-	-	-	
E658	-	(Electric)	-	-	-	-Sht. 51	-	-	B	N	-	-	-	-	-	-	-	-	-	-	-	-	
E661	-	(Electric)	-	-	-	-Sht. 51	-	-	B	N	-	-	-	-	-	-	-	-	-	-	-	-	
E662	-	(Electric)	-	-	-	-Sht. 51	-	-	B	N	-	-	-	-	-	-	-	-	-	-	-	-	
E663	-	(Electric)	-	-	-	-Sht. 51	-	-	B	N	-	-	-	-	-	-	-	-	-	-	-	-	
E664	-	(Electric)	-	-	-	-Sht. 51	-	-	B	N	-	-	-	-	-	-	-	-	-	-	-	-	
E665	-	(Electric)	-	-	-	-Sht. 51	-	-	B	N	-	-	-	-	-	-	-	-	-	-	-	-	
E666	-	(Electric)	-	-	-	-Sht. 51	-	-	B	N	-	-	-	-	-	-	-	-	-	-	-	-	
E667	-	(Electric)	-	-	-	-Sht. 51	-	-	B	N	-	-	-	-	-	-	-	-	-	-	-	-	
E668	-	(Electric)	-	-	-	-Sht. 51	-	-	B	N	-	-	-	-	-	-	-	-	-	-	-	-	
E701	-	(Electric)	-	-	-	-Sht. 51	-	-	B	N	-	-	-	-	-	-	-	-	-	-	-	-	
E702	-	(Electric)	-	-	-	-Sht. 51	-	-	B	N	-	-	-	-	-	-	-	-	-	-	-	-	
E703	-	(Electric)	-	-	-	-Sht. 51	-	-	B	N	-	-	-	-	-	-	-	-	-	-	-	-	
E704	-	(Electric)	-	-	-	-Sht. 51	-	-	B	N	-	-	-	-	-	-	-	-	-	-	-	-	
E709	-	(Electric)	-	-	-	-Sht. 51	-	-	B	N	-	-	-	-	-	-	-	-	-	-	-	-	
E710	-	(Electric)	-	-	-	-Sht. 51	-	-	B	N	-	-	-	-	-	-	-	-	-	-	-	-	
E711	-	(Electric)	-	-	-	-Sht. 51	-	-	B	N	-	-	-	-	-	-	-	-	-	-	-	-	
E712	-	(Electric)	-	-	-	-Sht. 51	-	-	B	N	-	-	-	-	-	-	-	-	-	-	-	-	

Table 6.2.4-3 List of Containment Penetrations and System Isolation Positions (Sheet 12 of 12)

Note 7 - The lines from refueling water storage pit (RWSP) to the suctions of the safety injection (SI) pumps and containment spray /residual heat removal (CS/RHR) pumps are each provided with a single remote manual gate valve. The valve does not provide a barrier outside containment to prevent loss of sump water should a leak develop in a recirculation loop. (The valve is to be closed remotely from the control room to accomplish this. Leak detection is provided for each line, so that the operator can determine which valve is to be closed.) These lines and valves are designed to preclude a breach of piping integrity. Therefore, guard pipe are not provided in these lines. (Reference: SRP 6.2.4 Rev.3 SRP Acceptance Criteria 5) This arrangement is intended to provide guidance in satisfying Criterion 56 on the other defined basis in that system reliability is enhanced by a single valve and a single barrier is still maintained after accommodating a single active failure. Inservice testing and inspection of these isolation valves and the associated piping system outside the containment is performed periodically under the inservice inspection requirements of ASME XI as described in subsection 3.9.6 and section 6.6. During normal operation, the systems are water filled, and degradation of valves or piping is readily detected.

~~Note 8 - The lines from refueling water storage pit (RWSP) to the suctions of the safety injection (SI) pumps and containment spray / residual heat removal (CSIRHR) pumps are each provided with a single remote manual gate valve. The valve does not provide a barrier outside containment to prevent loss of sump water should a leak develop in a recirculation loop. (The valve is to be closed remotely from the control room to accomplish this. Leak detection is provided for each line, so that the operator can determine which valve is to be closed.) These lines and valves are designed to preclude a breach of piping integrity. Therefore, guard pipe are not provided in these lines. (Reference: SRP 6.2.4 Rev.3 SRP Acceptance Criteria 5) This arrangement is intended to provide guidance in satisfying Criterion 56 on the other defined basis in that system reliability is enhanced by a single valve and a single barrier is still maintained after accommodating a single active failure. Inservice testing and inspection of these isolation valves and the associated piping system outside the containment is performed periodically under the inservice inspection requirements of ASME XI as described in subsection 3.9.6 and section 6.6. During normal operation, the systems are water filled, and degradation of valves or piping is readily detected.~~

Note 8 - These lines sense the pressure of containment atmosphere on the inside and are connected to pressure transmitters on the outside. Each of channels has a separate penetration and each pressure transmitter is located immediately adjacent to the outside of the containment wall. It is connected to a sealed bellows located immediately adjacent to the inside containment wall by means of a sealed fluid filled tube. This tubing along with the transmitter and bellows is conservatively designed and subject to strict quality control and to regular in-service inspections to assure its integrity. This arrangement provides a double barrier (one inside and one outside) between the containment and the outside containment. Should a leak occur outside containment, the sealed bellows inside containment, which is designed to withstand full containment design pressure, will prevent the escape of containment atmosphere. Should a leak occur inside containment the diaphragm in the transmitter, which is designed to withstand full containment design pressure, will prevent any escape of containment atmosphere. This arrangement provides automatic double barrier isolation without operator action and without sacrificing any reliability with regard to its safeguards functions. Both the bellows and the tubing inside containment and the transmitter and tubing outside containment are enclosed by protective shielding. The shielding (box, channel, etc.) prevents mechanical damage to the components from missiles, water jets, dropping tools, etc. Because of this sealed fluid filled system, a postulated severance of the line during either normal operation or accident conditions will not result in any release from the containment. If the fluid in the tubing is heated during the accident, the flexible bellows will allow expansion of the fluid without overpressurizing the system and without significant detriment to the accuracy of the transmitter. This arrangement is intended to provide guidance in satisfying Criterion 56 on the other defined basis in that it meets NRC Regulatory Guide 1.11 and consists of a missile protected closed system inside and outside containment. Therefore, in accordance with ANS 56.8-1994, Section 3.3.1, these valves are not required to be Type C tested. (Ref. 6.2-35)

Reactor Coolant System

Primary Makeup Water Supply Line to Pressurizer Relief Tank

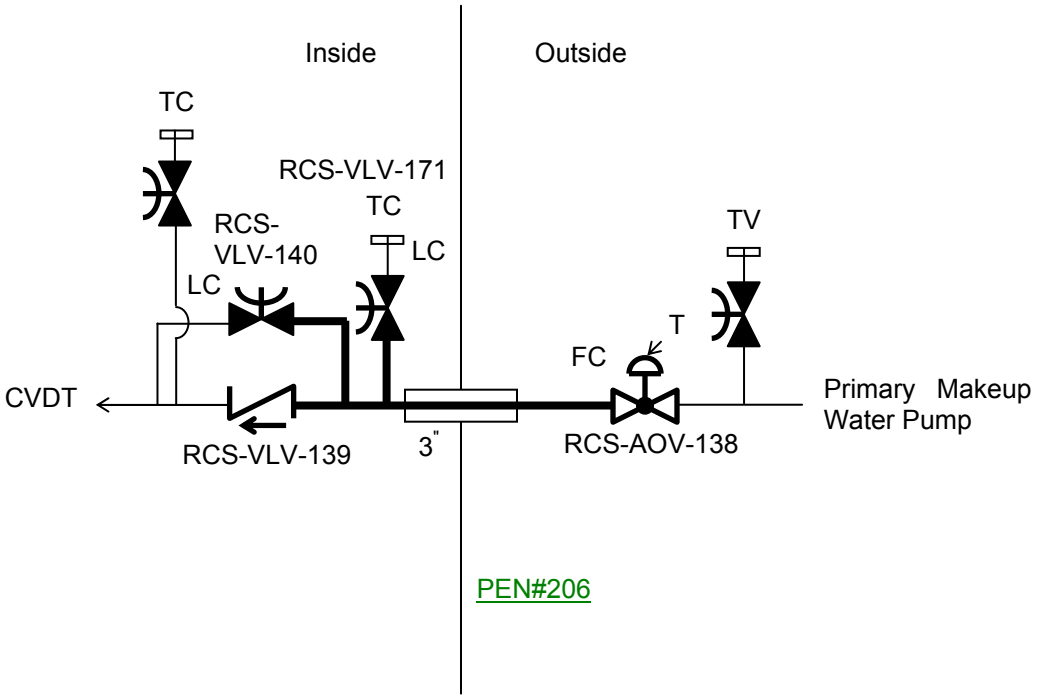

Figure 6.2.4-1 Containment Isolation Configurations (Sheet 3 of ~~51~~52)

Residual Heat Removal System

Containment Spray / Residual Heat Removal (CS/RHR) Pump Suction Line

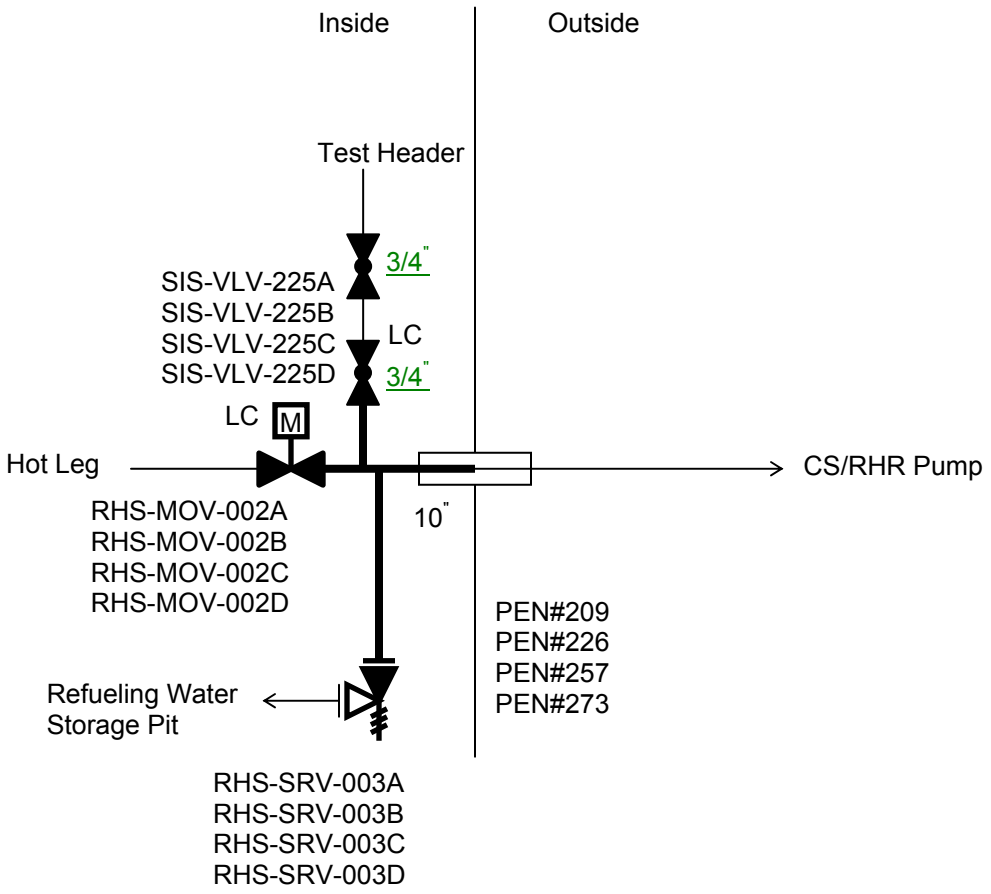

Figure 6.2.4-1 Containment Isolation Configurations (Sheet 12 of ~~51~~52)

Process and Post Accident Sampling System

Accumulator Sampling Line

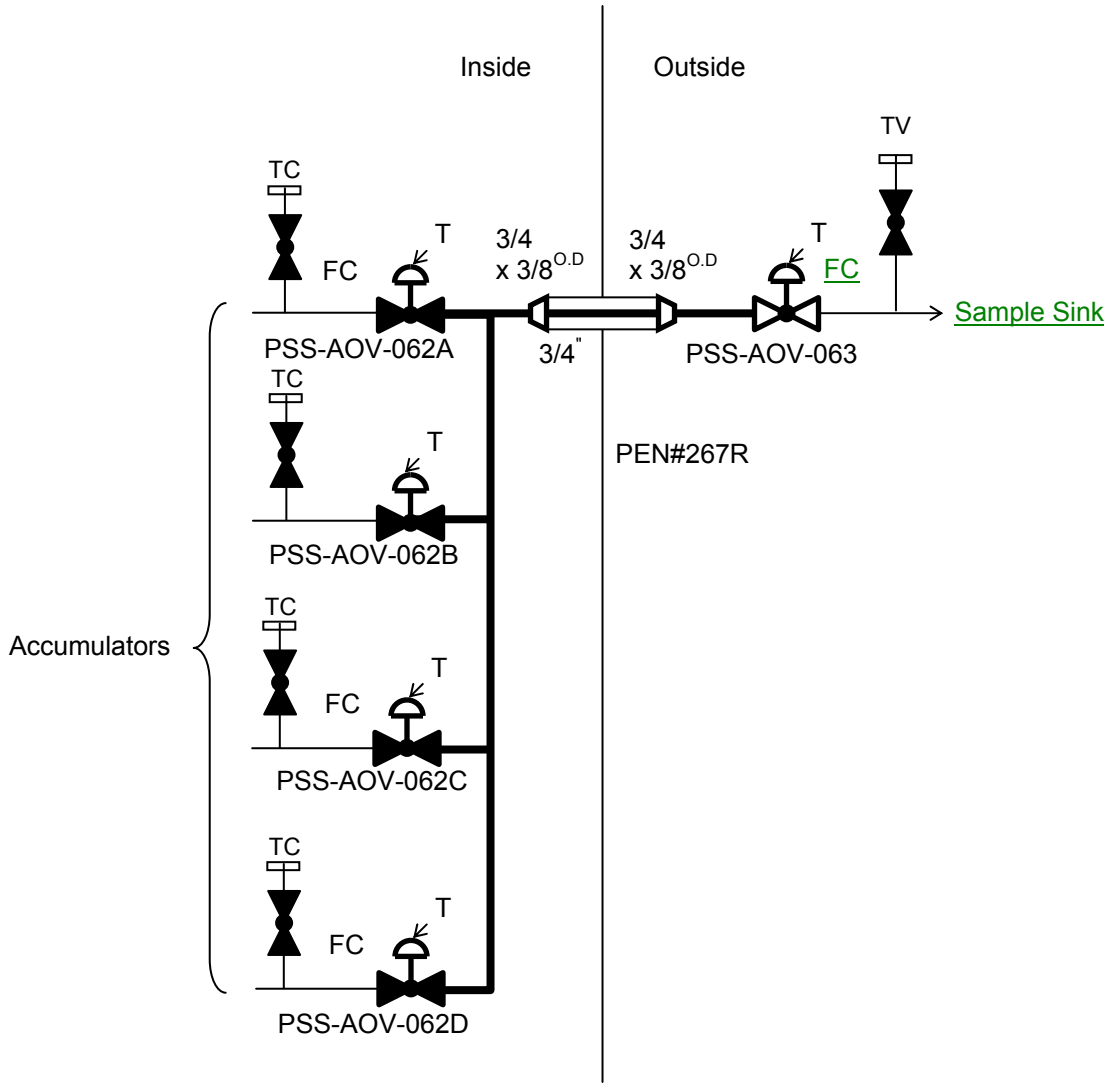

Figure 6.2.4-1 Containment Isolation Configurations (Sheet 29 of ~~51~~52)

Steam Generator Blowdown System

Steam Generator Blowdown (SGBD) Line

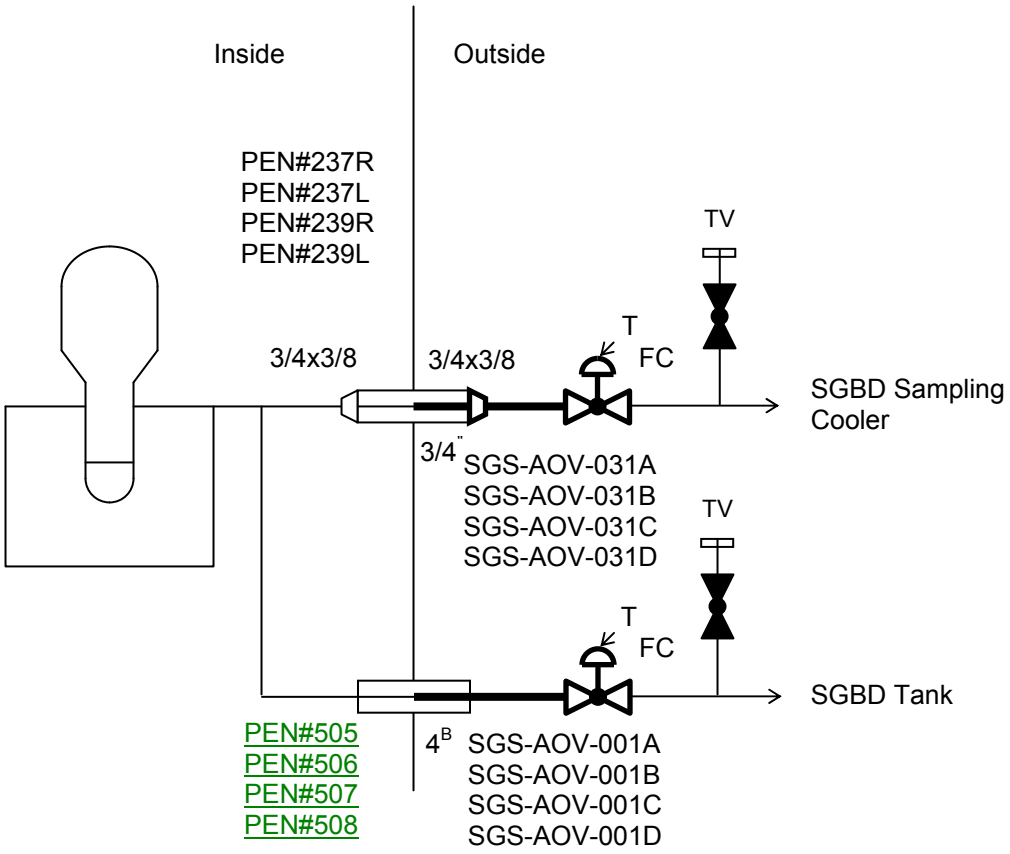

Figure 6.2.4-1 Containment Isolation Configurations (Sheet 31 of ~~51~~52)

Refueling Water System

Refueling Water Recirculation Pump Discharge Line

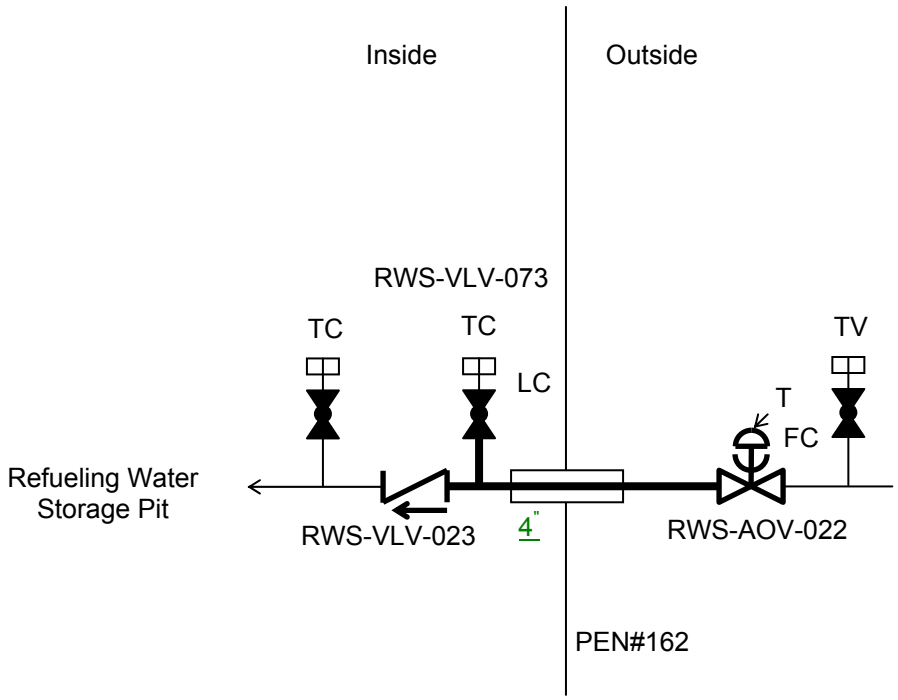

Figure 6.2.4-1 Containment Isolation Configurations (Sheet 33 of ~~51~~52)

Containment Leak Rate Testing

Air Supply and Exhaust Line

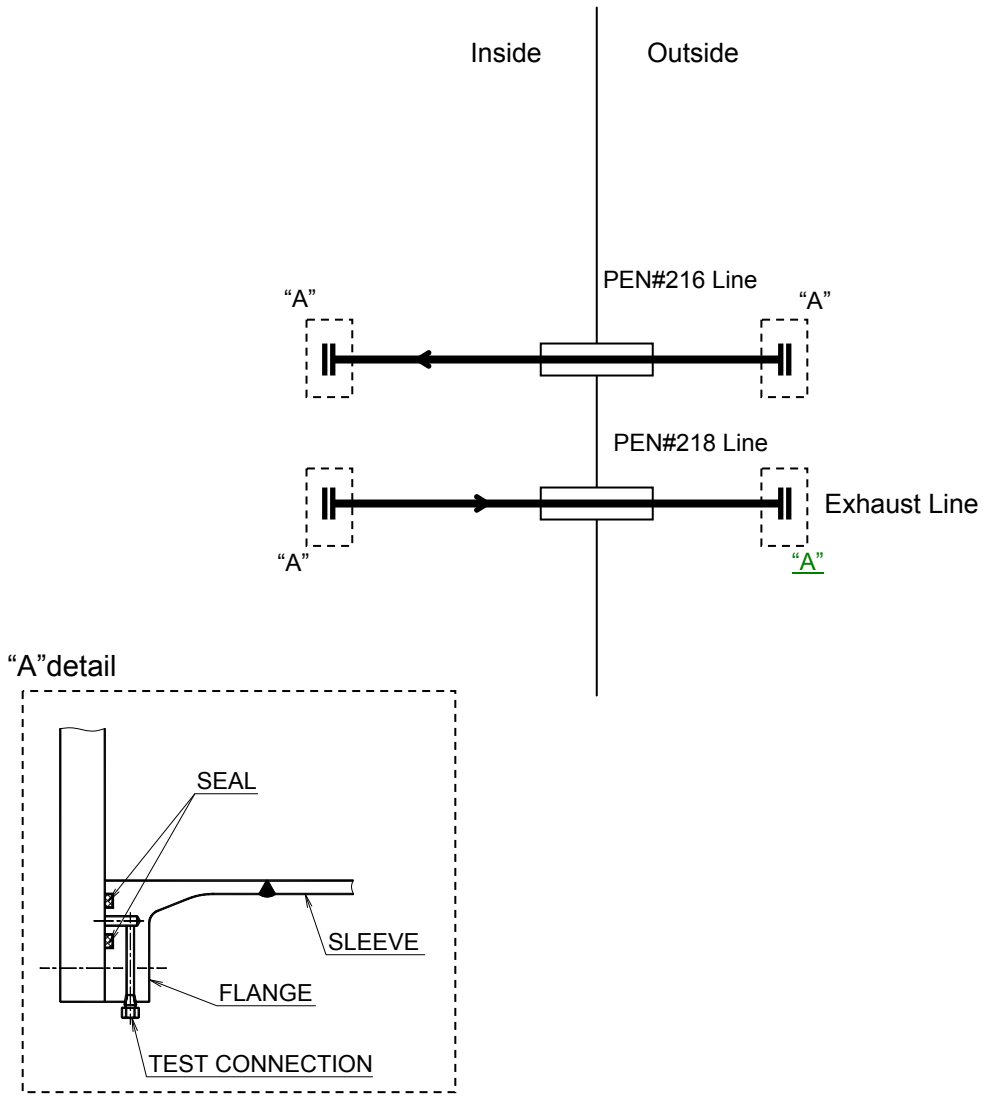

Figure 6.2.4-1 Containment Isolation Configurations (Sheet 46 of ~~51~~52)

Others

Oil Supply and Drain Line for Reactor Coolant Pump Motor

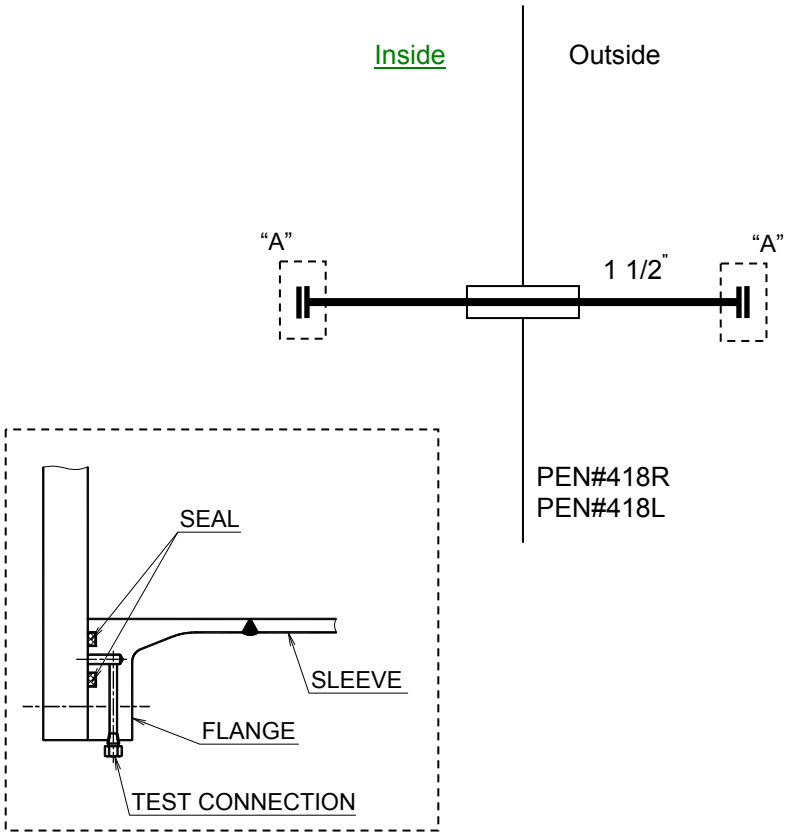

Figure 6.2.4-1 Containment Isolation Configurations (Sheet 48 of ~~51~~52)

Others

Spare Penetration

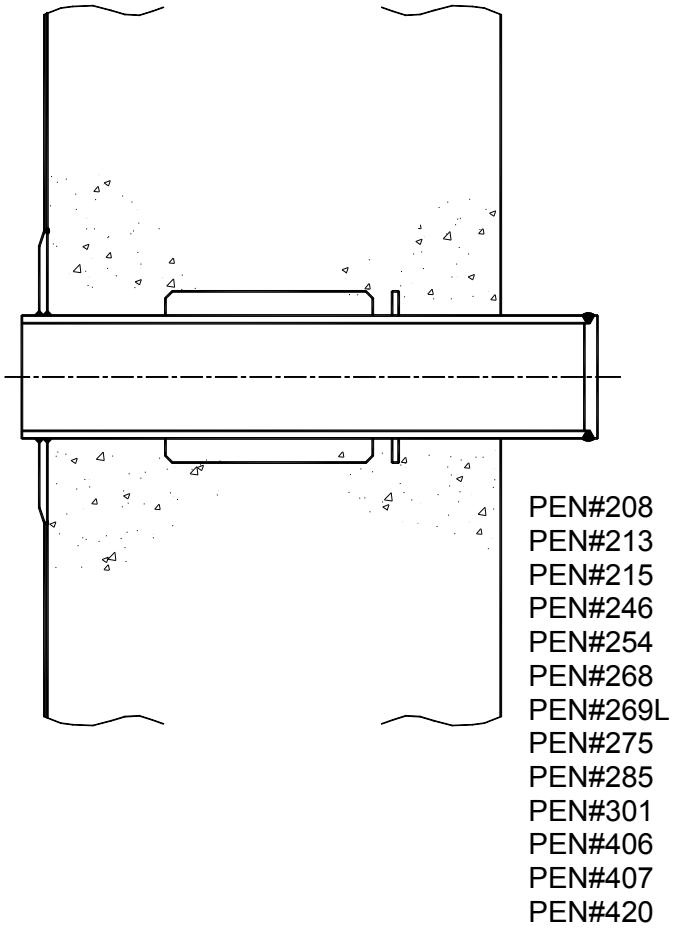

Figure 6.2.4-1 Containment Isolation Configurations (Sheet 52 of 52)

The volume of each accumulator (2,126 ft^3) includes the volume (1,342 ft^3 plus 784 ft^3) associated with both the large and small injection flow rates, respectively. Considering the total water volume (2,126 ft^3) and adding the volume of gas space and dead water volume, the required volume of a single accumulator is 3,180 ft^3 (Ref. 6.3-3).

The design temperature of the accumulator is 300°F which is consistent with the design temperature of the containment where the accumulators are located. The design pressure of the accumulator is 700 psig. This value provides margin to the normal operating pressure (i.e., nitrogen pressure) of 640 psig.

The flow rate coefficient and uncertainty of the flow damper is described in Ref. 6.3-3 and Ref. 6.3-4.

6.3.2.2.3 Refueling Water Storage Pit

The RWSP is designed to have a sufficient inventory of boric acid water for refueling and long-term core cooling during a LOCA. A minimum of 81,230 ft^3 of available water is required in the RWSP. Sufficient submerged water level is maintained to secure the minimum NPSH for the SI pumps. The RWSP capacity includes an allowance for instrument uncertainty and the amount of holdup volume loss within the containment. The capacity of the RWSP is optimized for a LOCA in order to prevent an extraordinarily large containment. Therefore, a refueling water storage auxiliary tank containing 29,410~~47,680~~ ft^3 is provided separately outside the containment to ensure that the required volume for refueling operations is met. Table 6.3-5 presents the relevant RWSP data. Detail description of structure and capacity of RWSP is provided in Subsection 6.2.2.2.

The temperature during normal operation is in a range of 70 to 120°F. The peak temperature following a LOCA is approximately 250°F.

The boric acid water in the RWSP is purified using the refueling water storage system (RWS). The RWS is shown in Figure 6.3-7 and may be cross-connected to one of two SFPCS filter and demineralizer vessels to remove the solid materials and the dissolved impurities for purification. The capacity of the purification subsystem is designed to maintain the chemistry of the spent fuel pool, the refueling cavity, the refueling water storage auxiliary tank, and the RWSP. Chapter 9, Subsection 9.1.3, discusses the SFPCS purification of the boric acid water.

6.3.2.2.4 ECC/CS Strainers

Four independent sets of strainers are provided inside the RWSP as part of the ECCS and CSS. ECC/CS strainers are provided for preventing debris from entering the safety systems, which are required to maintain the post-LOCA long-term cooling performance. ECC/CS strainers are designed to comply with RG 1.82. Strainer compliance with RG 1.82 is discussed in Subsection 6.2.2.2.6.

The RWSP is located at the lowest part of the containment in order to collect containment spray water and blowdown water by gravity. It is compartmentalized by a concrete structure against the upper containment area. Connecting pipes that drain the

Chapter 7

US-APWR DCD Chapter 7 Rev. 2, Tracking Report Rev. 3 Change List

Page	Location (e.g., subsection with paragraph/ sentence/ item, table with row/column, or figure)	Description of Change
7.1-2	7.1 fourth paragraph	Editorial: Added “and technical” to the first sentence.
7.1-7	7.1.2 second paragraph	Editorial: Added “and Technical” to the first and second sentence.
7.1-7	7.1.2 third paragraph	Editorial: Deleted the following descriptions. · “Topical Report” of the second sentence. · For these areas the Topical Report MUAP-07004 refers to “plant licensing documentation”. · Table 7.1-3 provides a roadmap for evaluation of each clause of IEEE Std 603-1991, where “plant licensing documentation” is referenced in Topical Report MUAP-07004, with the corresponding DCD sections, which describe the plant specific information.
7.1-8	7.1.3.2 second paragraph	Editorial: Deleted “Topical Report”.
7.1-9	7.1.3.4 second paragraph	Editorial: Deleted “Topical Report”.
7.1-11	7.1.3.7 sixth paragraph	Editorial: Deleted “Topical Report” from the first sentence.
7.1-12	7.1.3.10 second paragraph	Editorial: Deleted “Topical Report” from the sixth sentence.
7.1-14	7.1.3.14 fourth paragraph	Editorial: Deleted “Topical Report” from the last sentence.

US-APWR DCD Chapter 7 Rev. 2, Tracking Report Rev. 3 Change List

Page	Location (e.g., subsection with paragraph/ sentence/ item, table with row/column, or figure)	Description of Change
7.1-15	7.1.3.16 second paragraph	Editorial: Deleted “Topical Report” from second to the last sentence.
7.1-16	7.1.3.16 seventh paragraph	Editorial: Deleted “Topical Report” from the last sentence.
7.1-16	7.1.3.17	Editorial: Deleted “Topical Report” from second to the last sentence.
7.1-29 to 7.1-31	Table 7.1-3	Editorial: Deleted the Table 7.1-3.
7.2-11	7.2.1.5 first paragraph	Editorial: Deleted “Topical Report” from second to the last sentence.
7.2-12	7.2.1.6 first paragraph	Editorial: Deleted “Topical Report” from the last sentence.
7.2-16	7.2.2.7.1 first paragraph	Editorial: Deleted “Topical Report” from the first sentence.
7.2-16	7.2.2.7.2 first paragraph	Editorial: Deleted “Topical Report” from the first sentence.
7.2-16	7.2.3 first paragraph	Editorial: Deleted “the Topical Report” from the first sentence.
7.2-16	7.2.3.1 first paragraph	Editorial: Deleted “Topical Report” from the first sentence.
7.2-18	7.2.3.5 first paragraph	Editorial: Deleted “the Topical Report” from the first sentence.

US-APWR DCD Chapter 7 Rev. 2, Tracking Report Rev. 3 Change List

Page	Location (e.g., subsection with paragraph/ sentence/ item, table with row/column, or figure)	Description of Change
7.3-14	7.3.1.6 first paragraph	Editorial: Deleted “Topical Report” from the third sentence.
7.3-18	7.3.3 first paragraph	Editorial: Deleted “Topical Report” from the first sentence.
7.3-33	Table 7.3-7 Sheet 3 of 3	Editorial: Replaced “Functional Assignment Analysis for” with “FMEA of” in the item of “SLS Processing part (in SLS)”
7.4-8	7.4.2.2 second paragraph	Editorial: Deleted “Topical Report” from the second and last sentence.
7.4-9	7.4.3 first paragraph	Editorial: Deleted “Topical Report” from the first sentence.
7.5-11	7.5.1.4 second paragraph	Editorial: Deleted “Topical Report” from the last sentence.
7.5-16	7.5.3 first paragraph	Editorial: Deleted “Topical Report” from the last sentence.
7.5-21	Table 7.5-3 Sheet 1 of 3	RAI No.568-4588: Revised to add an additional category “C” to Reactor Coolant Pressure and Containment Pressure.
7.5-22	Table 7.5-3 Sheet 2 of 3	RAI No.568-4588: Revised to add an additional category “E” to Containment High Range Area Radiation.
7.6-5	7.6.1.7	RAI No.19-421: Added this subsection.

US-APWR DCD Chapter 7 Rev. 2, Tracking Report Rev. 3 Change List

Page	Location (e.g., subsection with paragraph/ sentence/ item, table with row/column, or figure)	Description of Change
7.6-7	7.6.3 first paragraph	Editorial: Deleted “Topical Report” from the first sentence.
7.7-20	7.7.2.3 last paragraph	Editorial: Deleted “Topical Report” from the first sentence.
7.8-1	7.8.1	Editorial: Deleted “diverse leak detection, and” form the first sentense.
7.8-2	7.8.1.1.1 second paragraph	Editorial: Deleted “Topical Report” from the last sentence.
7.8-3	7.8.1.1.3 second paragraph	Editorial: Deleted the paragraph.
7.8-8	7.8.2.9 first paragraph	Editorial: Deleted “Topical Report” from the first sentence.
7.9-2	7.9.1.1.2 third paragraph	Editorial: Deleted “Topical Report” from the first sentence.
7.9-6	7.9.2.2 second paragraph	Editorial: Deleted “Topical Report” from the third sentence.
7.9-7	7.9.2.3.2 first paragraph	Editorial: Deleted “Topical Report” from the third sentence.
7.9-7	7.9.2.3.3 first paragraph	Editorial: Deleted “Topical Report” from the last sentence.
7.9-8	7.9.2.3.6 second paragraph	Editorial: Deleted “Topical Report” from the first sentence.

US-APWR DCD Chapter 7 Rev. 2, Tracking Report Rev. 3 Change List

Page	Location (e.g., subsection with paragraph/ sentence/ item, table with row/column, or figure)	Description of Change
7.9-8	7.9.2.4 first paragraph	Editorial: Deleted “Topical Report” from the first sentence.
7.9-10	7.9.2.7 second paragraph	Editorial: Deleted “Topical Report” from the last sentence.
7.9-11	7.9.3 first paragraph	Editorial: Deleted “Topical Report” from the first sentence.
7.2-46	Figure 7.2-2 Sheet 14 of 22	ASAI 5-9 for MUAP-07006-P-A: Added the Turbine Trip signal to the block condition for the RT from DAS.
7.6-16	Figure 7.6-8	RAI 19-421: Added the figure.

- Fully digital, except analog DAS
- Consists of MELTAC platform
- Duplex redundant digital architecture for each control and process monitoring subsystem
- Analog DAS

D. Data communication

- Fully multiplexed, including Class 1E signals.
- Multi-drop data bus and serial data link.
- Fiber optics communication networks.

The overall I&C system consists of the safety-related protection and safety monitoring system (PSMS) with the safety-related portion of the HSIS, the non safety-related plant control and monitoring system (PCMS), the non safety-related DAS, and the non safety-related portion of the HSIS. The HSIS consists of safety-related safety VDUs, post accident monitoring (PAM), non safety-related operational VDUs, and non safety-related LDP for normal plant operation. The safety VDUs and operational VDUs are located on both the operator console (OC) in the main control room (MCR) and the remote shutdown console (RSC) in the remote shutdown room (RSR). Operational VDUs are also provided for information only (i.e., no control capability) at the technical support center (TSC). Information to support emergency response operations (the same as provided on operational VDUs) is provided at the emergency operations facility (EOF).

The description and/or details described in this section are based on the following Mitsubishi Heavy Industries, Ltd. (MHI) topical and technical reports. If there are any inconsistencies between the topical reports and this chapter, the Design Control Document (DCD) has precedence.

- Safety I&C System Description and Design Process, MUAP-07004 (Reference 7.1-2)
- Safety System Digital Platform -MELTAC-, MUAP-07005 (Reference 7.1-3)
- Defense-in-Depth and Diversity, MUAP-07006 (Reference 7.1-4)
- HSI System Description and HFE Process, MUAP-07007 (Reference 7.1-5)

All nuclear steam supply systems and other I&C systems are designed and manufactured by MHI.

The I&C systems for the US-APWR are essentially the same as the I&C systems for new plants in Japan, including the Japanese advanced pressurized water reactor (APWR), and systems currently installed and being implemented for plant modernization in Japan.

The PSMS is powered from two Class 1E Power Sources. These sources are uninterruptible power supplies (UPSs) backed-up by Class 1E station batteries and by the Class 1E gas turbine generators (GTGs). Power sources for the PSMS are shown in Figures 7.1-4 and 7.1-5. A description of the power distribution to PSMS equipment is described in Subsection 8.3.1. The Class 1E ac/dc power system is designed as safety-related equipment, fully conformed to the requirements of IEEE Std 308-2001(Reference 7.1-21) with an exception that pertains to sharing of power systems at multi-unit nuclear power plants since the US-APWR is a single unit plant. More detail descriptions for this conformance are described in Section 8.3.

The PCMS is powered from two non-Class 1E UPSs. These UPSs are backed-up by station batteries and by the alternate ac power source, as shown on Figures 7.1-6 and 7.1-7. A description of the power distribution from the UPS to PCMS equipment is provided in Subsection 8.3.1.

7.1.2 Identification of Safety Criteria

Table 7.1-2 “Regulatory Requirements Applicability Matrix” describes the compliance of the US-APWR I&C system to regulatory requirements and guidance. The related sections of the DCD are also described.

Section 3 of each MHI Topical and Technical Report describes applicable code, regulatory, and industry standard compliance. The code, regulatory, and industry standards in the Section 3 of each Topical and Technical Report are also applicable to the US-APWR I&C design.

Compliance to the corresponding sections of Appendix C.I.7.1-A in RG 1.206 (Reference 7.1-7), “Digital Instrumentation and Control Systems Application Guidance” ,are discussed in Subsection 7.1.3. Additionally, compliance with Appendices C.I.7.1-B, “Conformance with Institute of Electrical and Electronics Engineers (IEEE) Std 603”, and C.I.7.1-C, “Conformance with IEEE Std 7-4.3.2”, are discussed in ~~Topical Report~~ MUAP-07004 Appendices A and B respectively. For some sections of IEEE Std 603-1991, complete compliance requires plant specific descriptions. ~~For these areas the Topical Report MUAP-07004 refers to “plant licensing documentation”.~~ For the US-APWR these plant specific items are addressed in the DCD. ~~Table 7.1-3 provides a roadmap for evaluation of each clause of IEEE Std 603-1991, where “plant licensing documentation” is referenced in Topical Report MUAP-07004, with the corresponding DCD sections, which describe the plant specific information.~~

7.1.3 Design Bases of Instrumentation and Control System

The design of the I&C system meets all code, regulatory, and industry standards, as shown in Table 7.1-2, including the specific safety requirements described in the subsections below. Since the RPS, ESFAS, SLS, and other subsystems of the PSMS use a common platform, the design bases for PSMS are listed in this subsection. design bases that are specific to the RPS, ESFAS, SLS, or other I&C subsystems are discussed in Sections 7.2 through 7.9.

7.1.3.1 Defense in Depth and Diversity Concept

The architecture of the overall I&C system is based on the defense in depth and diversity concept. This concept defines four echelons of defense. These echelons are the control system, reactor trip system, engineered safety features actuation system, and monitoring and indicators.

Separation of functions and diversity of functions between these echelons minimize the potential for CCFs. In addition, the software applied for the PSMS has high integrity due to design simplicity and a comprehensive software quality program including independent verification and validation (V&V).

The conventional, analog, and hardwired DAS is provided per guidance of branch technical position (BTP) 7-19 (Reference 7.1-8), to accommodate beyond design basis CCFs that could adversely affect all safety and non-safety control systems within all echelons. The DAS provides automated actuation of time critical safety functions. In addition, the DAS allows the operator to monitor critical safety functions and to manually actuate safety process systems, using equipment that is diverse from the PSMS and PCMS. For more detailed discussion on diversity and defense-in-depth features, refer to Topical Report MUAP-07006.

7.1.3.2 Single Failure Criterion

A single failure within the PSMS does not prevent the initiation or accomplishment of a protective function at the system level, even when a channel is intentionally bypassed for test or maintenance.

For more detailed discussion on this topic refer to ~~Topical Report~~ MUAP-07004 Appendix A.5.1.

7.1.3.3 Redundancy Between Safety Divisions

The redundancy between the safety divisions (i.e., trains A, B, C, and D) satisfies the single failure criterion during normal operation and during all planned on-line test/maintenance configurations. This redundancy ensures the safety function can always be performed despite any single failure. Spurious actuation at the train level is discussed in Subsection 7.1.3.9, and for specific ESF functions in Section 7.3.

7.1.3.4 Independence

Each train of the PSMS is independent from each other and from non-safety systems, including the PCMS. The physical independence is designed based on the RG 1.75(Reference 7.1-22) which endorses IEEE Std 384-1992 (Reference 7.1-23). Electrical independence is maintained through qualified isolation devices, including fiber optic data communications cables. Functional independence between controllers is maintained through communication processors that are separate from function processors, and through logic that (1) ensures prioritization of safety functions over non-safety functions and (2) does not rely on signals from outside its own train to perform the safety function within the train.

For more detailed discussion on the methods used to ensure independence between I&C systems in different safety trains and between I&C systems in safety and non-safety systems refer to described in ~~Topical Report~~ MUAP-07004 Appendix A.5.6 and Appendix B.5.6.

Cabinets for each train of the PSMS are located in a separate plant equipment room fire area. These fire areas are separate from the fire areas where non-safety systems are located and separate from the fire areas of the MCR and the RSR. To ensure electrical independence, fiber optic cables or qualified isolators are used to interface all signals between plant equipment room fire areas. Electrical independence is also maintained between PSMS divisions and between the PSMS and non-safety systems within the MCR and the RSR.

In addition to these plant equipment room fire areas, electrical independence and physical separation are also maintained between divisions for instrumentation inputs and plant component control outputs interfaced with PSMS cabinets. The independence between the PSMS and PCMS for shared sensors is discussed in Subsection 7.1.3.16.

7.1.3.5 Isolation

Physical separation and electrical isolation are provided between the PSMS redundant trains and between the PSMS and non-safety systems, including the PCMS. Isolation devices are incorporated into conventional interfaces, data links, and communication networks that connect redundant trains, or carry signals to or from non-safety systems. The isolation devices ensure that credible faults, such as short circuits, open circuits, or the application of credible fault voltage do not propagate between systems. Chapter 8, Subsection 8.3.1.1.11 describes conformance to RG 1.204 (Reference 7.1-24). This conformance bounds the credible electrical surges and faults that are considered for electrical isolation.

In addition, for digital interfaces communications isolation is provided to ensure functional independence between systems. Communication isolation includes communication buffers, which provide separation between communication processing, functional processing, and functional logic, which ensures prioritization of all safety functions.

The isolation devices provide assurance that credible single failures in non-safety systems will not degrade the performance of safety systems, specifically in instances where protection signals are used by non-safety systems and non-safety signals are used by safety systems. For signals interfaced between redundant trains, the isolation devices provide assurance that failures in one train will not degrade the performance of other trains. The electrical, physical and functional isolation is also discussed in Subsection 7.1.3.4. The isolation from a design basis event of safety system based on the equipment qualification is discussed in Subsection 7.1.3.7. The PSMS digital components are located in a mild environment that is not impacted by any design basis event.

strength necessary for expected locations. The US-APWR is designed and operated consistent with any restrictions identified in the EMI/RFI qualification report, such as wireless communication exclusion zones, and open cabinet door conditions. This feature is described in Topical Report MUAP-07005 Section 5.3. The susceptibility envelope defined in RG 1.180 (7.1-26) is applicable to the US-APWR and therefore applicable to the PSMS, because the US-APWR does not include any extraordinary conducted or radiated emissions sources that are not included in operating nuclear power plants today.

Safety-related I&C components, such as sensors, detectors, cables, and connectors are designed to be qualified for operation in both normal and abnormal environments, and to meet seismic requirements of the site in which they are located. Qualification is assured per applicable industry standards (IEEE Std 323-2003 [Reference 7.1-9]) and regulatory requirements (RG 1.89 [Reference 7.1-10]), as described in Section 3.11.

Instrument sensing lines are specified to be protected in compliance with RG 1.151 (Reference 7.1-11) which endorses ISA-S67-02, including freeze protection.

For details regarding PSMS qualification testing, refer to ~~Topical Report~~ MUAP-07004 Sections 5.2.1 through 5.2.5. Refer to Chapter 3 for identification of the US-APWR qualification conditions.

The inspections, tests, analyses, and acceptance criteria (ITAAC) encompass the qualification of plant instrumentation, such as transmitters and nuclear instrumentation.

7.1.3.8 Unified Architecture

A unified architecture is applied to the design of integrated digital I&C systems of the US-APWR. The unified architecture provides a high quality and reliable platform for both the safety systems and non-safety systems, which simplifies communication between these systems. Maintenance resources are standardized for every system thereby reducing human error. An integrated digital technology is also used for VDU based operation.

Specification of the hardware modules, such as central processing units (CPUs) and I/O modules, used for each subsystem is basically the same throughout the I&C architecture, except for some specific application modules (e.g., rod position interface). This approach allows the total number of required spare parts to be minimized. The configuration of the basic software, POL, and engineering tools for specification of the application software, is the same in all digital I&C subsystems using the MELTAC platform. Maintenance procedures and tools (i.e., the engineering tool) are standardized for all subsystems; therefore, the training effort for the maintenance staff and potential for human error are minimized.

7.1.3.9 Redundancy Within Divisions and Systems

To prevent disturbance of the plant caused by a failure of the safety or non-safety I&C systems, a redundant configuration is applied. Failed components, including CPU, I/O modules, and communication modules, are detected by self-diagnostic features.

Redundant components are arranged in configurations for continuous parallel operation or standby operation, as described in Topical Report MUAP-07005 Section 4.1.1.1. For standby operation, self-diagnostic features automatically switch to redundant stand-by components in case of failure. The redundant fail-over components continue uninterrupted control without causing any disturbance to the plant.

Ac power for the I&C system is supplied from two different sources. The configuration of the power supplies within each I&C subsystem ensures no loss of function due to a single failure of the electric power source.

7.1.3.10 Self-Diagnosis Function

The integrity of digital I&C components is continuously checked by their self-diagnosis features. These self-diagnostic features result in early detection of failures, and allow on-line repair that improves system availability. Information about detected failures is gathered through networks and provided to maintenance staff in a comprehensive manner. In addition, the self-diagnostic features control redundant controller configuration, to maintain all system functions, even in the presence of failures. The self-diagnosis is always working in the digital control system but does not affect system operation.

Continuous self-diagnostic features allow elimination of most of the manual surveillance testing required for technical specification compliance. Manual testing and manual calibration verification are specifically provided for functions with no self-diagnostics. The integrity of the self-diagnosis is confirmed by a periodic manually initiated software memory check, which includes the software memory which is used for self-diagnosis. Also, when I/O is checked by manual sensor calibration and output actuation of plant components, the digital components which are self-tested are also re-checked. This provides manual confirmation for the integrity of all digital functions. The coverage of self-diagnosis and manual test is described in ~~Topical Report~~ MUAP-07004 Sections 4.3 and 4.4. Topical Report MUAP-07005 Section 4.1.5.1 describes self-diagnosis. The self-testing is provided for MELTAC components of PSMS, with the exception of the conventional circuits within the I/O and PIF modules, and the touch screens of the safety VDU.

7.1.3.11 Manual Testing, Bypasses, Overrides and Resets

Manual test features are provided to allow periodic testing of all functions that are not automatically tested through self-diagnostics. This includes primarily manual initiation functions and final actuation of plant components. All manual tests may be conducted on-line without full system actuation and without plant disturbance. The test of output modules for plant components is conducted along with the test of plant components. Since the reliability of the digital I&C equipment is significantly higher than the reliability of the plant components, the periodic test frequency is determined by the reliability of the plant components, not the reliability of the digital I&C equipment.

Safety systems may be placed in a bypass operation mode to allow manual testing and maintenance while the plant is on-line. For the RPS, automatic bypass management logic continuously checks for multiple bypassed conditions to ensure the minimum

HSIS are also designed to reduce the potential for human error and to allow easy operation. In addition to the MCR, the HSI also includes the RSC, TSC, EOF, and local control stations, such as auxiliary equipment control console. Refer to Chapter 18 for a full discussion of all HSI issues.

7.1.3.13 Quality of Components and Modules

The quality of PSMS components and modules and the quality of the PSMS design process are controlled by a program that meets the requirements of American Society of Mechanical Engineers (ASME) NQA-1-1994 (Reference 7.1-13). Conformance to ASME NQA-1-1994 is described further in Section 17.5.

7.1.3.14 System Calibration, Testing and Surveillance

Testing from and including the sensors of the PSMS through to and including the actuated equipment and HSI is accomplished in a series of overlapping sequential tests and calibrations. The majority of the tests are conducted automatically, through self-diagnostics. Most remaining manual tests may be performed with the plant at full power. There are no exceptions for testing at power in PSMS.

The test frequency for manual tests is based on an uncertainty and reliability analysis, reference Subsection 7.2.2.7 and 7.2.3.5, respectively, for additional information. This analysis demonstrates the need to conduct most manual tests for PSMS equipment no more frequently than once per 30 months, which allows for fuel cycles up to 24 months plus 6 months to accommodate 25% margin for consistency with technical specification surveillance interval compliance. Therefore conducting manual tests for PSMS equipment on-line or off-line, during refueling shutdown, is at the discretion of the plant owner.

Periodic routine calibration will be performed for the field located transmitters of each safety-related instrument loop. Due to the digital design of the control platform in the US-APWR, a traditional calibration method will be performed from the sensor to the analog to digital converter. During this calibration, the digital display will provide the instrument output. As in a traditional calibration, the measured value on the display will be compared to an expected range. Calibration points will include the trip setpoint to confirm required accuracy at the trip setpoint value.

The PSMS meets the periodic testing requirements of IEEE Std 338-1987 (Reference 7.1-27) which is endorsed by RG 1.22 (Reference 7.1-28). The test intervals are specified in the technical specifications, Chapter 16. All periodic testing is conducted to written procedures. For more detailed discussion on this topic, refer to ~~Topical Report~~ MUAP-07004 Sections 4.3 through 4.5, Appendix A.5.7, A.5.9, A.5.10, A.6.5 through A.6.7, and A.7.5.

Installed RTDs will be calibrated using the method defined in BTP 7-13(Reference 7.1-29). The following accuracy calibration is applicable to all safety related RTDs:

- A reference RTD is checked for acceptable accuracy and response time in controlled laboratory conditions.

- The reference RTD is installed. Loop current step response (LCRS) is checked to confirm applicability of laboratory test data.
- Measurements from installed RTDs are cross correlated to the reference RTD under known and sufficiently similar temperature and flow conditions (i.e., isothermal conditions of all RCS hot and cold legs to the extent practical).
- Calibration readout will be on digital displays, as discussed above, to ensure correct signal propagation and accuracy through the digital systems.

In addition, the LCRS is checked for installed RTDs used in the RPS or ESFAS, where response times are credited in the safety analysis. To detect response time degradation, the LCRS data is compared to the installed RTD's own historical data and to the LCRS for the reference RTD.

The accuracy and response time acceptance criteria account for expected instrument uncertainties and expected temperature and flow deviations. "As found" and "as-left" data is recorded and maintained.

7.1.3.15 Information Displays

Details on information displays are presented in Topical Report MUAP-07007, Chapter 18, and Section 7.5.

7.1.3.16 Consideration of Control System Induced Transients

Credible failures of the PCMS are bounded by the AOOs analyzed in the safety analysis, described in Chapter 15. These PCMS failures are described in Subsection 7.7.2.3. Chapter 8, Subsection 8.3.1.1.11 describes conformance to RG 1.204. This conformance bounds the envelope considered for PCMS EMI susceptibility. The PCMS uses the same hardware as the PSMS, which is qualified to RG 1.180. Therefore, additional lightening induced failures of the PCMS are precluded.

In some cases, it is advantageous to employ signals derived from instrumentation that are also used in the protection trains. This practice reduces the need for separate non-safety instrumentation, which would require additional penetrations into reactor pressure boundaries and introduce the need to additional maintenance in hazardous areas. For each parameter where instrumentation is shared, the PCMS receives four redundant signals from each train of the RPS. The signal selection algorithm (SSA), within the PCMS, receives input from all safety process trains but passes only the second highest operable process signal value to the control system's automation algorithms. The reactor control systems also have a modified signal selector using an average calculation process. (This average calculation for select signals in the reactor control system is different from the description in ~~Topical Report~~ MUAP-07004 Section 4.2.5.) The SSA excludes process inputs that are failed or taken out of service for maintenance or testing.

The SSA of the PCMS ensures the PCMS does not take erroneous control actions based on a single instrument channel failure or a single RPS train failure. As such, a single failure will not cause the PCMS to take erroneous control actions that challenge

the PSMS, while the PSMS is in a degraded operability state due to a failed instrument channel or failed RPS train. The SSA is designed with an augmented quality program, including software V&V.

The SSA is continuously tested as follows:

- The PCMS employs the same self-test features as the PSMS. These features are described in Section 4.1.5 of Topical Report MUAP-07005.
- The basic software configuration and application software configuration, within the PCMS controller, is periodically confirmed by the same manually initiated method described in Section 4.1.4.1.c of Topical Report MUAP-07005.

Since the SSA uses only digital values obtained from the PSMS via the unit bus, all functions of the SSA are completely covered by self-testing; no additional manual tests are required. The digital values obtained from the PSMS are confirmed during channel calibration for the safety sensors.

This SSA within the PCMS allows the RPS to have one instrument channel inoperable or bypassed at all times while still complying with General Design Criteria (GDC) 24 (Reference 7.1-14) and IEEE Std 603-1991 (Reference 7.1-15). As described in the probabilistic risk assessment (PRA) the RPS meets the plant reliability goals with only three channels in operation. Refer to US-APWR Probabilistic Risk Assessment, Technical Report MUAP-07030 (Reference 7.1-16).

The shared instrumentation signals are interfaced through fiber optic data networks. As such, an electrical fault in the PCMS cannot propagate to the protection channel. Refer to ~~Topical Report~~ MUAP-07004 Section 4.2.5 for additional details.

7.1.3.17 Life Cycle Process

MHI applies its MELCO's safety system digital platform, MELTAC, to the PSMS and PCMS systems of the US-APWR. Full details of the life cycle process for the MELTAC basic software, including quality assurance (QA), management, development, cyber security management, installation, maintenance, training, operation, and the software safety plan are discussed in Topical Report MUAP-07005 Section 6.0. A summary of the life cycle process for the system application software, including QA, management, development, cyber security management, installation, maintenance, training, operation, and the software safety plan are discussed in ~~Topical Report~~ MUAP-07004 Section 6.0. A detailed description of the application software life cycle process, including BTP 7-14 (Reference 7.1-17) compliance, is provided in the Software Program Manual for the US-APWR Technical Report MUAP-07017 (Reference 7.1-18).

7.1.3.18 Quality Assurance Program

The overall quality assurance program (QAP) for the US-APWR I&C systems is described in Chapter 17. The specific QAP for the MELTAC platform is described in Topical Report MUAP-07005 Section 6.0. These QAPs address all requirements of Title 10, Code of Federal Regulations (CFR), Part 50, Appendix B (Reference 7.1-19), and IEEE Std 7-4.3.2-2003 (Reference 7.1-20).

~~Table 7.1-3 Road Map of US-APWR I&C System Conformance to IEEE Std. 603-1991 (Sheet 1of 3)~~

~~IEEE Std 603-1991 Criteria*~~		~~Plant Licensing Documentation (PLD) Referenced in MUAP-07004~~	~~Resolution of PLD in DCD~~
~~4~~	~~Safety System Designation~~	~~-~~	~~-~~
~~4.1~~	~~Design Basis Events~~	~~Plant safety analyses (not I&C specific)~~	~~Chapter 15~~
~~4.2~~	~~Safety Functions and Corresponding Protective Actions~~	~~Plant safety analyses (not I&C specific)~~	~~Chapter 15~~
~~4.3~~	~~Permissive Conditions for Each Operating Bypass Capability~~		
~~4.4~~	~~Variables Required to be Monitored for Protective Action~~	~~Specific reactor trip functions~~ ~~Specific protection system functions~~	~~Section 7.2, 7.3~~
~~4.5~~	~~The Minimum Criteria for Each Action Controlled by Manual Means~~		~~-~~
~~4.5.1~~	~~Allowed Time and Plant Condition~~	~~Credit for manual actions and associated HSI~~	~~Subsection 7.5.1.5~~
~~4.5.2~~	~~Justification of Permitting Initiation or Control Subsequent to Initiation~~	~~-~~	~~-~~
~~4.5.3~~	~~Control Room Habitability~~	~~-~~	~~-~~
~~4.5.4~~	~~Display of Variable~~	~~Credit for manual actions and associated HSI~~ ~~HSI for discretionary manual actions~~	~~Subsection 7.5.1.5,~~ ~~Section 7.5~~
~~4.6~~	~~Spatially Dependent Variables~~	~~Number, locations and processing method for spatially dependent variables~~	~~Section 7.2~~
~~4.7~~	~~Range of Conditions for Safety System Performance~~	~~-~~	~~-~~
~~4.8~~	~~Functional Degradation of Safety Functions~~	~~-~~	~~-~~
~~4.9~~	~~Reliability~~	~~-~~	~~-~~
~~4.10~~	~~The Critical Points in Time or the Plant Conditions~~	~~-~~	~~-~~
~~4.11~~	~~Equipment Protective Provisions~~	~~Equipment protective provisions~~	~~Section 8.3.1~~
~~4.12~~	~~Other Special Design Basis~~	~~-~~	~~-~~
~~5~~	~~Safety System Criteria~~	~~-~~	~~-~~
~~5.1~~	~~Single Failure Criterion~~	~~-~~	~~-~~
~~5.2~~	~~Completion of Protective Action~~	~~-~~	~~-~~
~~5.3~~	~~Quality~~	~~-~~	~~-~~
~~5.4~~	~~Equipment Qualification~~	~~-~~	~~-~~
~~5.5~~	~~System Integrity~~	~~-~~	~~-~~
~~5.6~~	~~Independence~~	~~-~~	~~-~~
~~5.6.1~~	~~Between Redundant Portions of a Safety System~~	~~-~~	~~-~~
~~5.6.2~~	~~Between Safety Systems and Effects of a Design Basis Event~~	~~-~~	~~-~~

~~*The conformance to IEEE 603-1991 except for plant specific items is described in Appendix A of MUAP-07004~~

~~Table 7.1-3 Road Map of US-APWR I&C System Conformance to IEEE Std. 603-1991 (Sheet 2of 3)~~

~~IEEE Std 603-1991 Criteria*~~		~~Plant Licensing Documentation (PLD) Referenced in MUAP-07004~~	~~Resolution of PLD in DCD~~
~~5.6.3~~	~~Between Safety Systems and Other Systems~~	~~-~~	~~-~~
~~5.6.3.1~~	~~Interconnected Equipment~~	~~-~~	~~-~~
~~5.6.3.2~~	~~Equipment in Proximity~~	~~-~~	~~-~~
~~5.6.3.3~~	~~The Effects of a Single Random Failure~~	~~-~~	~~-~~
~~5.6.4~~	~~Detailed Independence Criteria~~	~~-~~	~~-~~
~~5.7~~	~~Capability for Test and Calibration~~	~~Test frequency for the plant process components~~	~~Subsection 7.1.3.14~~
~~5.8~~	~~Information Displays~~	~~-~~	~~-~~
~~5.8.1~~	~~Displays for Manually Controlled Actions~~	~~Credit for manual actions and associated HSI~~	~~Subsection 7.5.1.5~~
~~5.8.2~~	~~System Status Indication~~	~~-~~	~~-~~
~~5.8.3~~	~~Indication of Bypasses~~	~~-~~	~~-~~
~~5.8.4~~	~~Location of Displays~~	~~-~~	~~-~~
~~5.9~~	~~Control of Access~~	~~Security system for access control in the plant~~	~~Section 13.6~~
~~5.10~~	~~Repair~~	~~-~~	~~-~~
~~5.11~~	~~Identification~~	~~Color coding for labels and name tags~~	~~Subsection 7.1.3.19~~
~~5.12~~	~~Auxiliary Features~~	~~Description of auxiliary features (e.g. electrical power sources, building HVAC)~~	~~Subsection 7.1.1.10, Chapter 8, Chapter 9~~
~~5.13~~	~~Multi-Unit Stations~~	~~Sharing of this equipment between multiple units, as needed~~	~~Not Applicable for I&C~~
~~5.14~~	~~Human Factors~~	~~-~~	~~-~~
~~5.15~~	~~Reliability~~	~~Reliability analysis for specific plant applications~~	~~Chapter 19, MUAP-07030~~
~~5.16~~	~~Common Cause Failure (IEEE 603-1998)~~	~~-~~	~~-~~
~~6~~	~~Sense and Command Features - Functional and Design Requirements~~	~~-~~	~~-~~
~~6.1~~	~~Automatic Control~~	~~Credit for manual actions and associated HSI~~	~~Subsection 7.5.1.5~~
~~6.2~~	~~Manual Control~~	~~-~~	~~-~~
~~6.3~~	~~Interaction between the Sense and Command features and other Systems~~	~~-~~	~~-~~
~~6.4~~	~~Derivation of System Inputs~~	~~Direct process measurements and algorithms for calculated functions~~	~~Subsection 7.2.1~~
~~6.5~~	~~Capability for Testing and Calibration~~	~~-~~	~~-~~

~~*The conformance to IEEE 603-1991 except for plant specific items is described in Appendix A of MUAP-07004~~

~~**Table 7.1-3 Road Map of US-APWR I&C System Conformance to IEEE Std. 603-1991 (Sheet 3of 3)**~~

~~**IEEE Std 603-1991 Criteria***~~		~~**Plant Licensing Documentation (PLD) Referenced in MUAP-07004**~~	~~**Resolution of PLD in DCD**~~
~~6.6~~	~~Operating Bypasses~~	~~Automatically initiated operating bypasses~~	~~Subsection 7.1.3.11~~
~~6.7~~	~~Maintenance Bypass~~	~~-~~	~~-~~
~~6.8~~	~~Setpoint~~	~~-~~	~~-~~
~~6.8.1~~	~~Setpoint Uncertainties~~	~~-~~	~~-~~
~~6.8.2~~	~~Multiple Setpoints~~	~~Parameters with multiple setpoints that are automatically or manually disabled~~	~~Subsection 7.2.1.6.1, 7.2.1.6.2, 7.3.1.6.2, 7.2.1.6.3~~
~~7~~	~~Executive Features – Functional and Design Requirements~~	~~-~~	~~-~~
~~7.1~~	~~Automatic Control~~	~~-~~	~~-~~
~~7.2~~	~~Manual Control~~	~~Plant components with execute feature manual controls~~	~~Section 7.1, Table 7.1-1~~
~~7.3~~	~~Completion of Protective Action~~	~~-~~	~~-~~
~~7.4~~	~~Operating Bypass~~	~~-~~	~~-~~
~~7.5~~	~~Maintenance Bypass~~	~~-~~	~~-~~
~~8~~	~~Power Source Requirements~~	~~Electric power sources for this equipment~~	~~Subsection 7.1.1.10, Chapter 8~~

~~*The conformance to IEEE 603-1991 except for plant specific items is described in Appendix A of MUAP-07004.~~

operate in a seismic event. (i.e., not fail to initiate a trip for conditions which would require a trip.)

RT is initiated by either of following two diverse turbine trip signals:

1. Main Turbine Stop Valve Position

The RT signal is generated within each RPS train when that train receives signals indicating that all four main turbine stop valves are closed. As for all other trips, a RT is generated when two out of four RPS trains have detected this condition.

There are only two limit switches on each main turbine stop valve interfaced to RPS trains A and D, as associated circuits. RPS train A routes the limit switch signals to train B, C, and D. RPS train D retransmits the limit switch signals to train A, B, and C. Interfaces to each RPS train are by isolated digital data links described in Topical Report MUAP-07005 Section 4.3.3 and refer to Figure 7.2-7.

The main turbine stop valve limit switch inputs can be individually bypassed in each RPS train to permit channel testing. Since there are only two limit switch channels, the duration of this maintenance bypass is limited by the technical specifications. This maintenance bypass condition is displayed in the MCR.

This trip is automatically bypassed by permissive P-7 for power level lower than the P-7 setpoint. The operating bypass is automatically removed above P-7 power level. Figure 7.2-2 sheet 13 shows the logic for this trip function.

2. Turbine Emergency Trip Oil Pressure

The turbine emergency trip oil pressure trip signal is generated when two out of four oil pressure channels exceed the trip setpoint. Four oil pressure signals are independently interfaced to each train of the RPS as associated circuits.

This trip is automatically bypassed by permissive P-7 for power level lower than the P-7 setpoint. The operating bypass is automatically removed above the P-7 power level. Figure 7.2-2 sheet 13 shows the logic for this trip function.

7.2.1.5 Manual Control and Actuated Devices

In addition to automatic trip, operators can trip the RTBs using conventional, fixed position, hardwired switches on the OC. There is one switch for each RT actuation train. Actions by under-voltage trip and shunt trip attachments to trip reactor have been discussed in Subsection 7.2.1.2. There are no operating bypasses associated with the manual RT. Maintenance bypasses that allow manual RT testing are described in ~~Topical Report~~ MUAP-07004 (Reference 7.2-3) Section 4.4.1. Figure 7.2-2 sheet 4 shows the logic for this trip function.

7.2.1.6 Bypasses

Portions of the safety system can be placed in a bypass mode to allow testing and maintenance while the plant is on-line. Such bypasses are known as maintenance bypasses. Maintenance bypasses are discussed in ~~Topical Report~~ MUAP-07004.

In addition to maintenance bypasses, automatic and manual operating bypasses are provided to bypass certain protective actions that would otherwise prevent modes of operation such as startup. Automatic and manual operating bypasses are described in Subsections below.

7.2.1.6.1 Automatic Operating Bypasses

Some operating bypasses are automatically initiated separately within each PSMS train when the plant process permissive condition is sensed by the PSMS input channel(s). Automatically initiated operating bypasses for the RPS are as follows:

- High source range neutron flux trip is bypassed automatically by power range neutron flux (P-10).
- Low reactor coolant flow 1-out-of-4 trip is bypassed automatically during low power conditions (P-7).
- Low RCP speed trip is bypassed automatically by during low power conditions (P-7).
- Low pressurizer pressure trip is bypassed automatically by during low power conditions (P-7).
- High pressurizer water level trip is bypassed automatically by during low power conditions (P-7).
- High-high SG water level trip is bypassed automatically by during low power conditions (P-7).
- Reactor trip on turbine trip is bypassed automatically by during low power conditions (P-7).

All automatically initiated operating bypasses are automatically removed when the plant moves to an operating condition where the protective action would be required if an accident occurred. Refer to Table 7.2-4.

7.2.1.6.2 Manual Operating Bypasses

Some operating bypasses must be manually initiated. These operating bypasses can be manually initiated separately within each PSMS division when the plant process permissive condition is sensed by the PSMS input channel(s). Manually initiated operating bypasses for the RPS are as follows:

7.2.2.7.1 Methodology for Instrument Channel Statistical Accuracy Calculation

The methodology applied to combine the uncertainty components for a channel is provided in ~~Topical Report~~ MUAP-07004 Section 6.5.4. Reconciliation of the final setpoint study for each plant cannot be performed until the design of the plant is finalized.

Technical Report MUAP-09022 (Reference 7.2-13) provides more detail description for instrument setpoint methodology. The setpoint methodology includes the relationship between analytical limit, setpoint and channel uncertainty. MUAP-09022 also provides the channel uncertainty calculations associated with the safety related setpoints used for the RT and ESF actuation functions.The instrumentation channel uncertainty of a safety function channel is analyzed to determine the channel setpoint. The channel uncertainty value is calculated by combining instrumentation factors that affect the accuracy of each component in the channel/loop, using statistical methods. A square root sum of the squares (SRSS) method is applied. The accuracy of each component consists of the nominal accuracy plus uncertainty due to temperature effects, time dependent drift, and other factors. The method is based on the guidance provided by ANSI/ISA-67.04.01-2000 and ISA-RP67.04.02-2000 that is equivalent to ANSI/ISA-S67.04 (Reference 7.2-7), Part I -1994, endorsed by RG 1.105.

7.2.2.7.2 Methodology for System Response Time Calculation

The methodology for calculating system response time is provided in ~~Topical Report~~ MUAP-07004 Section 6.5.3.

7.2.2.8 Equipment Qualification

Refer to Subsection 7.1.3.7 for details.

7.2.3 Analysis

Detailed compliance to the GDC, IEEE Std 603-1991 and IEEE Std 7-4.3.2-2003 are described in ~~Topical Report~~ MUAP-07004 Section 3.0, Appendix A and B.

This section provides the failure modes and effects analysis (FMEA) for PSMS and specifically, RT.

7.2.3.1 FMEA Method and Results

The methodology for the FMEA is provided in ~~the Topical Report~~ MUAP-07004 Section 6.5.1. The FMEA follows the guidance of IEEE Std 352-1987 which is referred from IEEE Std 603-1991 and IEEE Std 7-4.3.2-2003, and IEEE Std 379-2000 (Reference 7.2-8) which is endorsed by RG 1.53 (Reference 7.2-9).

Safety functions are designed with multiple divisions. Each safety division is independent from the other safety divisions and from the non-safety division. Independence ensures that credible single failures cannot propagate between divisions within the safety system or between non-safety and safety divisions. Therefore, credible single failures cannot prevent proper protective action at the system level. The credible

- Loss of Power Source: Any one division of subsystems in the PSMS is supplied power from redundant power sources. Therefore, loss of a single power source does not prevent accomplishing the safety function. The loss of a power source may result in a transient condition. This condition is considered in the safety analysis described in Chapter 15.

7.2.3.3 Test and Inspection

The RT system meets the testing requirements of IEEE Std 338-1987 (Reference 7.2-10), as discussed in Subsection 7.1.3.14. The initial and subsequent test intervals are specified in the technical specifications. Periodic testing conforms to RG 1.22 (Reference 7.2-11), as discussed in Subsection 7.1.3.14.

7.2.3.4 Restrictive Setpoints

For the US-APWR, the reactor will not be permitted to operate when one RCS loop is unavailable, as evidenced by the generation of a RT signal as a result of low reactor coolant flow conditions. Logic diagram Figure 7.2-2 sheet 5 shows that the RT signal is generated when low reactor coolant flow condition occurs in any one of the four RCS loops A, B, C or D. Therefore, the requirement for restrictive setpoints is not applicable.

7.2.3.5 Reliability Analysis

The methodology for calculating system and component reliability is provided in ~~the Topical Report~~ MUAP-07004 Section 6.5.2.

7.2.4 Combined License Information

No additional information is required to be provided by a COL applicant in connection with this section.

7.2.5 References

7.2-1 Criteria for Independence of Class 1E Equipment and Circuits, IEEE Std 384-1992.

7.2-2 Safety System Digital Platform -MELTAC-, MUAP-07005-P Rev.4 (Proprietary) and MUAP-07005-NP Rev.4 (Non-Proprietary), September 2009.

7.2-3 Safety I&C System Description and Design Process, MUAP-07004-P Rev.3 (Proprietary) and MUAP-07004-NP Rev.3 (Non-Proprietary), Sptember 2009.

7.2-4 Setpoint for Nuclear Safety-Related Instrumentation, ANSI/ISA-67.04.01-2000.

7.2-5 Methodologies for the Determination of Setpoints for Nuclear Safety-Related Instrumentation, ISA-RP67.04.02-2000.

7.2-6 Setpoint for Safety-Related Instrumentation, Regulatory Guide 1.105 Revision 3, December 1999.

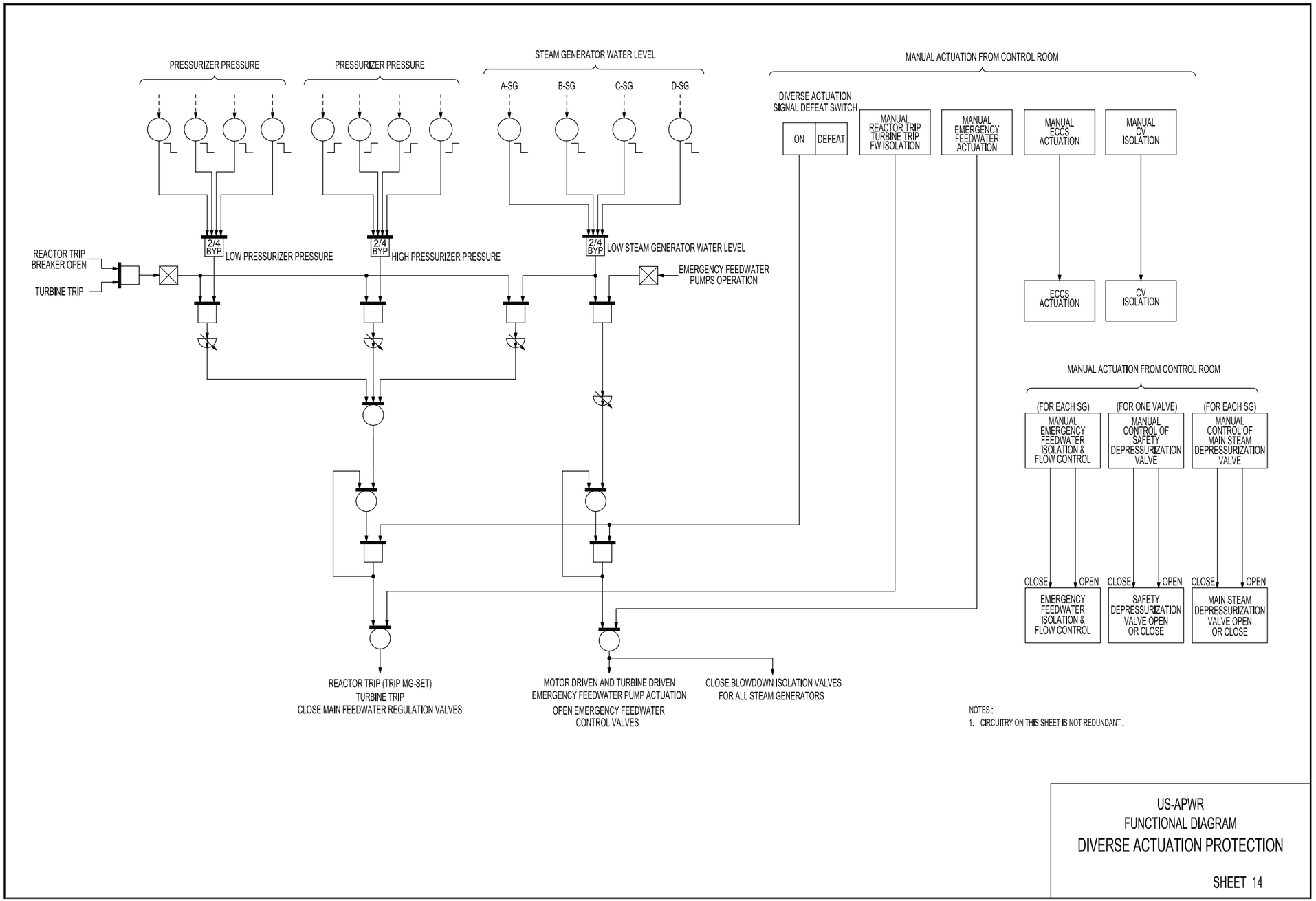

Figure 7.2-2 Functional Logic Diagram for Reactor Protection and Control System (Sheet 14 of 21)

The turbine bypass valves and the turbine bypass cooldown valves are controlled by two permissive solenoids on each valve, train A and D respectively.

7.3.1.6 Bypasses and Overrides

The safety system can be placed in a bypass mode to allow testing and maintenance while the plant is on-line. Such bypasses are known as maintenance bypasses. Maintenance bypasses are discussed in ~~Topical Report~~ MUAP-07004 (Reference 7.3-2). In addition to maintenance bypasses, automatic and manual operating bypasses are provided to block certain protective actions that would otherwise prevent modes of operations such as startup. Automatic and manual bypasses are described in the following subsections.

7.3.1.6.1 ESF System Maintenance Bypass

Bypasses are provided in each ESF system train to block the actuation of one or more ESF signals (e.g., ECCS actuation, EFW, main steam isolation, etc.). The purpose of these bypasses is to allow maintenance on an ESF process system, or to accommodate an ESFAS/SLS controller failure. There are alarms for ESF systems out of service conditions that block functionality at the train level.

7.3.1.6.2 Automatic Operating Bypasses

These operating bypasses are automatically initiated separately within each PSMS division when the plant process permissive condition is sensed by the PSMS input channel(s). The following is a list of automatically initiated operating bypasses:

- High main steam line pressure negative rate initiating signal for main steam line isolation is automatically bypassed when the P-11 interlock clears (when pressurizer pressure is above the setpoint). This operating bypass can be manually removed when the P-11 is present (when pressurizer pressure is below the setpoint).

- When the P-4 interlock clears (RTB closed) the low T_{avg} initiating signal for main feedwater isolation (for closing all main feedwater regulation valves) is automatically bypassed. This operating bypass is automatically removed when the P-4 interlock is present (RTB open).

7.3.1.6.3 Manual Operating Bypasses

Some operating bypasses must be manually initiated. These operating bypasses can be manually initiated separately within each PSMS train when the plant process permissive condition is sensed by the PSMS input channel(s). The following is a list of manually initiated operating bypasses:

- Low pressurizer pressure initiating signal for the ECCS actuation function can be manually bypassed only when the P-11 interlock is present (pressurizer pressure is below the setpoint). This operating bypass is automatically removed when the P-11 interlock clears (when pressurizer pressure is above the setpoint).

7.3.2.8 Equipment Qualification

Refer to Subsection 7.1.3.7 for details.

7.3.3 Analysis

Detailed compliance to the GDC, IEEE Std 603-1991 (Reference 7.3-7) and IEEE Std 7-4.3.2-2003 (Reference 7.3-8) is described in ~~Topical Report~~ MUAP-07004 Section 3.0, Appendix A and B.

7.3.3.1 FMEA

The FMEA method for ESF actuation in the PSMS is identical to that used in the RPS, as described in Subsection 7.2.3.1. The safe state for ESFAS/SLS is "as-is."

The FMEA for ESF actuation in PSMS is provided in Table 7.3-7. Figure 7.3-5 shows the configuration of system diagram for ESFAS as used in the FMEA table. Train A is illustrated as the representative features in this figure, while the PSMS consists of four trains.

7.3.3.2 Safety Analysis

The ESF system design requirements such as response time and setpoint determination, are considered and reflected in the safety analysis, contained in Chapter 15. The response time, instrument accuracy, and setpoint as shown in Table 7.3-4, meet the safety analysis assumptions.

Chapter 15 analysis for US-APWR addresses AOOs and PAs.

The analysis for additional postulate failures are described as follows:

- Loss of cooling water to vital equipment: The US-APWR has four divisions of safety-related cooling water, corresponding to the four divisions of safety-related ESF equipment. These four divisions are controlled by the PSMS. Therefore, loss of a single division of cooling water does not prevent accomplishing the safety function.

- Loss of plant instrument air: There is no reliance on plant instrument air for any safety functions. The loss of plant instrument air will result in the loss of MFW. This condition is considered in the safety analysis described in Chapter 15.

- Loss of power source: Any one division of subsystems in the PSMS is supplied power from redundant power sources. Therefore, loss of a single power source does not prevent accomplishing the safety function. The loss of power source may result in a transient condition. This condition is considered in the safety analysis described in Chapter 15.

Table 7.3-7 FMEA for ESF Actuation in PSMS (for Figure 7.3-5) (Sheet 3 of 3)

Component (one train)*[1]	Failure Mode	Method of Failure Detection	Local Failure Effect	Effect on Protective Function
Safety Bus	No data input or output	Self-diagnostic alarm in the affected ESFAS and SLS train.	One train ESF does not actuate when process reaches actuation level.	Three trains of ESF can be actuated due to the communication failure. Remaining three trains provide ESF actuation.
	Fail to dis-connection	Self-diagnostic alarm in the affected ESFAS and SLS train.	There is no impact for a single disconnection due to its ring configuration of the safety bus.	No failure effect to ESF function.
SLS Communication part (from ESFAS)	No data output	Self-diagnostic alarm in the affected SLS train.	One parallel redundant part fails. Another parallel redundant part process the signal.	No failure effect to ESF function.
SLS Processing part (in SLS)	No data output	Self-diagnostic alarm.	One parallel redundant part fails. Another parallel redundant part process the signal.	No failure effect to ESF function.
	Spurious Status Change	Refer to MUAP-09020 "~~FMEA of~~Functional Assignment Analysis for Safety I&C System"	Refer to MUAP-09020 "~~FMEA of~~ Functional Assignment Analysis for Safety I&C System"	Refer to MUAP-09020 "~~FMEA of~~ Functional Assignment Analysis for Safety I&C System"
SLS Output part (to Component)	Spurious change status	Manual periodic test or plant system disturbance.	One train ESF changes their status. (If the change of their status affects plant disturbances, appropriate design such as duplicated output module are adopted.)	One train of ESF can be actuated due to the output failure. All trains can still provide ESF actuation. The periodic test is administrated to detect the failure for components whose spurious actuation does not cause a plant disturbance.
	Fail as is	Manual periodic test.	One train ESF does not actuate when process reaches actuation level.	One train of ESF can fail due to the output failure. The remaining one or three trains provide ESF actuation, depending on the two or four train mechanical system configuration. For four train mechanical systems, if another train is being tested, two trains provide ESF actuation. The periodic test is administrated to detect the failure.
Unit Bus Inside part of PSMS	No data output	Annunciation of communication error	No failure effect to ESF function.	No failure effect to ESF function.
Unit Bus Outside part of PSMS	Fail to dis-connection	Annunciation of communication error	There is no impact for a single disconnection due to its ring configuration of the safety bus.	No failure effect to ESF function.

Note:

In addition, the design of the safe shutdown systems including the design of the RSR is based on the following CFR;

1. 10 CFR 50.55a(a)(1), “Quality Standards.”
2. 10 CFR 50.55a(h), “Protection Systems and Safety Systems”
3. 10 CFR 50.34(f)(2)(xx), “Power for Pressurizer Level Indication and Controls for Pressurizer Relief and Block Valves”
4. 10 CFR 50, Appendix A, GDC 1, “Quality Standards and Records.”
5. GDC 2, “Design Bases for Protection against Natural Phenomena.”
6. GDC 4, “Environmental and Missile Design Bases.”
7. GDC 13, “Instrumentation and Control.”
8. GDC 24, “Separation of Protection and Control Systems.”
9. GDC 34, “Residual Heat Removal.”
10. GDC 35, “Emergency Core Cooling.”
11. GDC 38, “Containment Heat Removal.”

7.4.2.1 I&C Systems Required for Safe Shutdown

Safe shutdown, using only safety-related equipment, relies on monitoring instrumentation interfaced through the PSMS and safety grade HSI.

7.4.2.2 Single Failure Criterion

All functions of the RPS, ESFAS, SLS, and safety grade HSIS, including those used to achieve safe shutdown, meet the single failure criterion. Safety-related plant instrumentation and component controls, used to achieve safe shutdown, are redundant.

The PSMS is the I&C system credited for safe shutdown. The PSMS meets the single failure criteria through multiple redundant and independent trains, which control multiple redundant and independent mechanical trains, as described in ~~Topical Report,~~ MUAP-07004 Section 4.1(b). The PSMS is completely isolated from all non-safety I&C systems, such that there are no failures in non-safety I&C systems that can adversely affect the PSMS, as described in ~~Topical Report,~~ MUAP-07004 Section 3.3(6).

The test method for all I&C equipment within the PSMS, including equipment used for safe shutdown, is the same. Self-diagnosis with overlapping manual tests that encompass PSMS I/O and interfacing plant process components, such as sensors, pumps and valves, ensure there are no undetectable failures. There are at least two fully redundant and independent trains for all safe shutdown components to satisfy the single failure criterion. Table 7.4-1 shows that there is redundancy for each component credited for safe shutdown.

7.4.2.3 Quality of Components and Modules

All functions of the RPS, ESFAS, SLS, and safety grade HSIS, including those used to achieve safe shutdown, are Class 1E, and meet all appropriate quality requirements. Class 1E plant instrumentation and component controls are provided for all safe shutdown functions.

The operational VDUs and interfaces to the SLS, which may also be used to achieve normal and safe shutdown, are developed through an augmented quality program that includes software V&V, and seismic and environmental testing to levels consistent with the PSMS.

7.4.2.4 Independence

Redundant divisions of the RPS, ESFAS, SLS, and safety grade HSI, including those used to achieve safe shutdown, are independent from each other and from the non-safety division. This independence is also applicable to redundant divisions of safety-related plant instrumentation and component controls for all safe shutdown functions as described in Subsections 7.1.3.4 and 7.1.3.5.

Within the PSMS, which is the I&C system credited for safe shutdown, there are no components that are common to redundant trains, such as common switches for actuation, reset, mode, test, or any other features which could compromise the independence of the redundant trains.

Within the mechanical systems credited for safe shutdown, the main steam isolation valves and main feedwater isolation valves are common to both redundant safe shutdown trains. Each valve has two separate and redundant solenoid operators which are assigned to separate trains.

7.4.2.5 Periodic Testing

All functions of the RPS, ESFAS, SLS, and safety grade HSI, including those used to achieve safe shutdown, are periodically tested, as described in Subsection 7.1.3.14. This testing encompasses safety-related plant instrumentation and component controls for all safe shutdown functions. It is noted that fast response RTDs are not used for the RTDs of wide range RCS temperature for safe shutdown and PAM, therefore, the response time testing in BTP 7-13 (Reference 7.4-9) is not applicable to the RTDs in this section.

7.4.2.6 Use of Digital Systems

All functions of the PCMS, used to achieve normal shutdown, and all functions of the RPS, ESFAS, SLS, and safety grade HSI, including those used to achieve safe shutdown, rely on digital systems, as described in Subsections 7.1.3.8 and 7.1.3.17. Analog plant instrumentation and conventional component controls are relied on for normal and safe shutdown functions.

7.4.3 Analysis

Detailed compliance to the GDC, IEEE Std 603-1991 and IEEE Std 7-4.3.2-2003 are described in ~~Topical Report~~ MUAP-07004 Section 3.0, Appendix A and B.

- Reactor coolant cold leg temperature (wide range)
- Degrees of subcooling
- Core exit temperature
- Reactor coolant pressure

4. Secondary Heat Sink

- SG water level (narrow range)
- SG water level (wide range)
- EFW flow
- MFW flow

5. RCS Integrity

- Reactor coolant pressure
- Reactor coolant hot leg temperature (wide range)
- Reactor coolant cold leg temperature (wide range)
- Degrees of subcooling
- Core exit temperature

6. Containment Integrity

- Containment pressure
- Containment temperature
- CS/RHR pump discharge flow
- Status of Containment isolation valves

The SPDS is discussed in ~~Topical Report~~ MUAP-07004 (Reference 7.5-5) Section 4.2.5.b.

The SPDS is provided by the PCMS on operational VDUs, alarm VDUs, and the LDP. The LDP provides a continuous display of the status of each critical safety function. The status displayed for each critical safety function corresponds to the critical safety function status algorithm defined in the emergency operating procedures (EOPs).

The computer that processes SPDS functions and all related HSI components are redundant, to ensure operation is not adversely affected by credible malfunctions.

7.5.2.3 Plant Annunciators

The Plant Annunciators design for the US-APWR complies with the following regulatory guidance:

- Staff Requirements Memorandum (SRM) SECY-93-087, Item II.T, "Control Room Annunciator (Alarm) Reliability. (Reference 7.5-11)

7.5.2.4 Safety Parameter Displays System

The SPDS design for the US-APWR complies with the requirements of the following codes, standards, and RGs:

- 10 CFR 50.34 (f)(2)(iv), "Additional TMI-Related Requirements" regarding the SPDS console

- NUREG 0737 Supplement 1, "Clarification of TMI Action Plan Requirements - Requirements for Emergency Response Capability", with respect to SPDS (Reference 7.5-12)

7.5.2.5 Facilities

The emergency response facility design for the US-APWR complies with the requirements of the following codes, standards, and RGs:

- 10 CFR 50.34 (f)(2)(xxv), "Additional TMI-Related Requirements" regarding emergency response facilities

7.5.3 Analysis

Detailed compliance with the GDC, IEEE Std 603-1991 (Reference 7.5-13) and IEEE Std 7-4.3.2-2003 (Reference 7.5-14) are described in ~~Topical Report~~ MUAP-07004 Section 3.0, Appendix A and B.

For most accident conditions, RPS and ESFAS are designed to perform required protective functions automatically without any credit for manual action(s). Manual operator actions are credited for mitigating some accident conditions, as defined in the safety analysis. Manual operator actions are also credited for achieving safe shutdown for normal and post accident conditions.

The HFE program described in Chapter 18 includes the design and evaluation process for HSIS to determine the adequacy of the alarms, indications, controls and procedures for all credited manual actions. The results of the HFE program demonstrate that:

1. The operator has sufficient information to perform required manual safety functions (e.g., manual ESF operations, possible unanticipated post accident operations, and monitoring the status of safety equipment).

Table 7.5-3 PAM Variables
(Sheet 1 of 3)

Variable	Range	Monitored Function or System	Quantity	Type
Reactor Coolant Hot Leg Temperature (Wide Range)*[1]	32 to 752°F	Core Cooling	1per Loop	A,B,D
Reactor Coolant Cold Leg Temperature (Wide Range)*[1]	32 to 752°F	Core Cooling	1 per Loop	A,B,D
Reactor Coolant Pressure	0 to 3000 psig	Core Cooling Maintaining RCS Integrity	2	A,B,C,D
Degrees of Subcooling	360°F Subcooling to 360°F Superheat	Core Cooling	2	A,B,D
Pressurizer Water Level*[2]	0 to 100% of Span	Primary Coolant System	4	A,B,D
SG Water Level (Wide Range)*[3]	0 to 100% of Span	Secondary System (SG)	1 per SG	B,D
SG Water Level (Narrow Range)*[2]	0 to 100% of Span	Secondary System (SG)	4 per SG	A,B,D
Main Steam Line Pressure*[2]	0 to 1400 psig	Secondary System (SG)	4 per SG	A,B,D
EFW Flow*[3]	0 to 250% Design Flow	Emergency Feedwater System	1 per Line	A,B,D
Wide Range Neutron Flux	1E-6 to 100% Full Power	Reactivity Control	2	B,D
Core Exit Temperature	200 to 2300°F	Core Cooling Fuel Cladding	2 Train (13 thermocouples for each train)	B,C
Containment Pressure*[2]	-7 to 80 psig	Maintaining RCS Integrity Maintaining Containment Integrity	4	B,C,D
RV Water Level	Bottom of Hot Leg to Top of Vessel	Core Cooling	2	B,D
Containment Isolation Valve Position (Excluding Check Valves)	Open/Closed	Maintaining Containment Integrity	1 per Valve	B,D
Reactor Coolant Soluble Boron Concentration	0 to 4000 ppm	Reactivity Control	-(sampling)	B
CS/RHR Pump Discharge Flow*[4]	0 to 130% Design Flow	RHR or Decay Heat Removal System	1 per Line	D
CS/RHR Pump Minimum Flow*[4]	0 to 110% Design Flow	RHR or Decay Heat Removal System	1 per Line	D
Accumulator Pressure	0 to 1000 psig	Safety Injection System	1 per Tank	D
Accumulator Water Level	0 to 100% Span	Safety Injection System	1 per Tank	D
Safety Injection Pump Discharge Flow	0 to 110% Design Flow	Safety Injection System	1 per Line	D
Safety Injection Pump Minimum Flow	0 to 110% Design Flow	Safety Injection System	1 per Line	D
Refueling Water Storage Pit Water Level (Wide Range)	0 to 100% Span	Safety Injection System	2	B,D
Refueling Water Storage Pit Water Level (Narrow Range)	0 to 100% Span	Safety Injection System	2	B,D
EFW Pit Water Level	0 to 100% Span	Emergency Feedwater System	2 per Pit	B,D

Table 7.5-3 PAM Variables
(Sheet 2 of 3)

Variable	Range	Monitored Function or System	Quantity	Type
Containment Temperature	32 to 428°F	Containment Cooling Systems	1	D
CCW Header Pressure	0 to 220 psig	Cooling Water System	1 per Line	D
ESW Header Pressure	Plant Specific	Cooling Water System	1 per Line	D
Status of Standby Power and Other Energy Sources Important to Safety ▪ Class 1E ac Bus Voltage ▪ Class 1E dc Bus Voltage	 0 to 9 kV ac 0 to 150 V dc	Power Supplies	 1 per Bus 1 per Bus	 D D
Radioactivity Concentration or Radiation Level in Circulating Primary Coolant	1/2 Tech Spec Limit to 100 Times Tech Spec Limit	Fuel Cladding	-(sampling)	C
Containment High Range Area Radiation*2	1 to 1E-7 R/hr	Containment Radiation	4	C,E
MCR Area Radiation	1E-5 to 1 mR/hr	Area Radiation	1	E
TSC Area Radiation	1E-4 to 1E+1 mR/hr	Area Radiation	1	E
Plant Vent Radiation Gas Radiation*5 (Including High Range)	5E-8 to 1E+5 µCi/cc	Airborne Radioactive Materials Released from Plant	1	E
Main Steam Line Radiation	1E-1 to 1E+3 µCi/cc	Airborne Radioactive Materials Released from Plant	1 per Line	E
GSS Exhaust Fan Discharge Line Radiation*5 (Including High Range)	5E-8 to 1E+5 µCi/cc	Airborne Radioactive Materials Released from Plant	1	E
Condenser Vacuum Pump Exhaust Line Radiation*5 (Including High Range)	5E-8 to 1E+5 µCi/cc	Airborne Radioactive Materials Released from Plant	1	E
Plant Air Vent High Concentration Sampling System	1E-3 to 1E+2 µCi/cc	Airborne Radioactive Materials Released from Plant Particulates and Halogens	-(sampling)	E
Airborne Radio Halogens and Particulates (Portable Sampling with Onsite Analysis Capability)	1E-9 to 1E-3 µCi/cc	Environs Radiation and Radioactivity	-(sampling)	E
Plant and Environs Radiation (Portable Instrumentation)	1E-3 to 1E+4 R/hr, photons 1E-3 to 1E+4 rads/hr, beta Radiations and low-energy photons	Environs Radiation and Radioactivity	At least 1	E
Plant and Environs Radioactivity (portable instrumentation)	(Isotopic Analysis)	Environs Radiation and Radioactivity	At least 1	E
MCR Outside Air Intake Radiation	1E-7 to 1E-2 µCi/cc (Gas) 1E-11 to 1E-5 µCi/cc (Iodine) 1E-12 to 1E-7 µCi/cc (Particulate)	Airborne Radioactive Materials taken into MCR	1 for each	E

These interlocks may be manually bypassed for reopening the valves to restore RCP seal and spent fuel pit heat exchanger cooling, if required.

Two series valves assigned to different trains ensures isolation even in the presence of a single failure.

The signal path for the ECCS and CS interlocks is from the ESFAS to the SLS that controls the isolation valves through motor control centers. The signal path for the surge tank interlock is from local level transmitters to the RPS to the SLS for control of these same valves.

7.6.1.6 RCP Thermal Barrier HX CCW Return Line Isolation Interlock

Each CCW subsystem supplies cooling water to the RCP thermal barrier heat exchanger. Two motor-operated valves and flow meters are located at the CCW outlet line of the RCP thermal barrier heat exchanger.

These valves close automatically upon a high flow rate signal at the outlet of this line in the event of in-leakage from the RCS through the thermal barrier heat exchanger, and prevent this in-leakage from further contaminating the CCWS.

The interlocks for these valves are shown in Figure 7.6-7.

These interlocks ensure isolation of in-leakage from the RCS through the thermal barrier heat exchanger.

The signal path for these interlocks is from the local flow transmitters to the RPS, and then SLS, which controls these MOVs via motor control centers.

7.6.1.7 Low-pressure letdown line isolation valve

A single normally closed air-operated valve is placed in each of the two low pressure letdown lines connected to two of the four RHR trains. During the normal plant cool down operation, one of these valves is open to divert a portion of the RCS flow to the CVCS for the purpose of purification and RCS inventory control.

Additionally at mid-loop operation during plant shutdown, these valves are automatically closed and the CVCS is isolated from the RHRS after receiving the RCS loop low-level signal to prevent loss of RCS inventory.

The interlocks for these valves are shown in Figure 7.6-8. For RHS-AOV-024B and 024C the piping diagrams for these valves are shown in Figure 5.4.7-2 in Chapter 5.

7.6.2 Design Basis Information

The interlock systems important to safety comply with the following codes and standards:

1. 10 CFR 50.55a(a)(1), “Quality Standards.”

7.6.3 Analysis

Detailed compliance to the GDC, IEEE Std 603-1991 (Reference 7.6-2) and IEEE Std 7-4.3.2-2003 (Reference 7.6-3) are described in ~~Topical Report~~ MUAP-07004 (Reference 7.6-4) Section 3.0, Appendix A and B.

All the interlocks important to safety provide protection for plant mechanical systems or protection to prevent plant accident conditions. All the interlocks are implemented by the PSMS.

According to RG 1.206 (Reference 7.6-5) the following categories of interlocks are described:

- Interlocks to prevent overpressurization of low-pressure systems:
  - This is the RCS/RHR interlock discussed in Subsection 7.6.1.1.
- Interlocks to prevent overpressurization of the primary coolant system during low-temperature operations of the RV:
  - There are no interlocks necessary to prevent overpressurization of the RCS during low-temperature operations of the RV. Refer to Subsection 5.2.2.
- Interlocks for ECCS Accumulator Valves:
  - The ECCS accumulator valve Interlock is discussed in Subsection 7.6.1.4.
- Interlocks required to isolate safety systems from non-safety systems:
  - This is the CCW Interlock discussed in Subsection 7.6.1.5.
- Interlocks required to preclude inadvertent inter-ties between redundant or diverse safety systems:
  - There are no interlocks required to preclude inadvertent inter-ties in the US-APWR.
  - Redundant I&C trains are protected from inadvertent inter-ties, such as those cause by electrical faults, by qualified isolation devices described in Subsection 7.1.3.5.
  - Inadvertent inter-ties between safety systems and the DAS are discussed in Section 7.8.
  - Redundant mechanical trains (i.e., redundant CCW trains) are protected as discussed in Subsection 7.6.1.5.

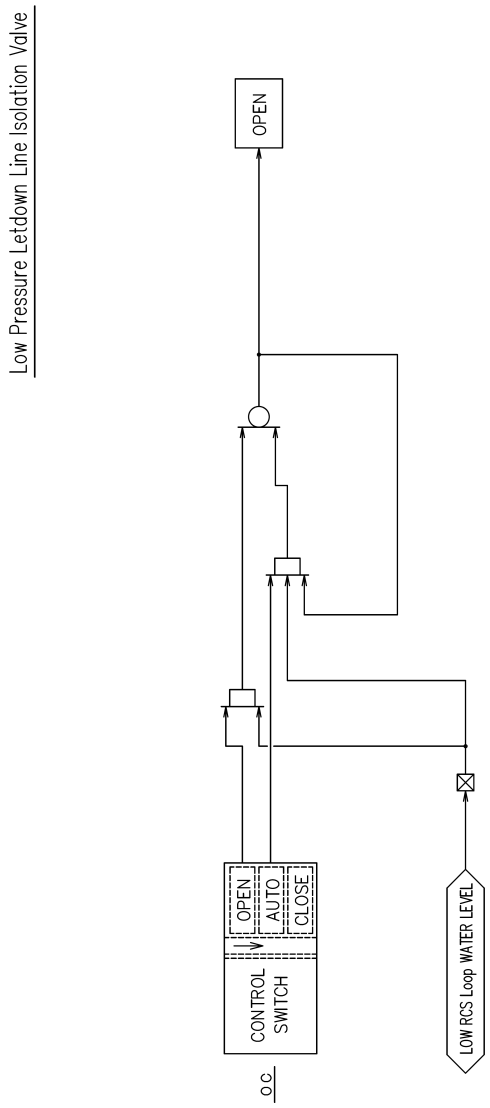

Figure 7.6-8 Interlocks for Low Pressure Letdown Line Isolation Valve

- Multiple spurious commands from an operational VDU.
- Spurious actuation of multiple control functions in the same control group that do not rely on the same software block.
- Spurious actuation of un-programmed control actions (e.g., out of sequence motion for multiple control banks).
- Spurious motion of a single control rod.

~~Topical Report~~ MUAP-07004 (Reference 7.7-1) Section 5.1.8 describes the basis for the PCMS failures assumed in safety analysis.

7.7.2.4 Effects of Control System Failures Caused by Accidents

The PCMS controllers are in mild environment locations, which are not impacted by plant accidents. In addition, most PCMS inputs come from safety-related sensors, which are qualified for accident environments. To accommodate random PCMS failures and PCMS failures that may be caused by accident conditions, the Chapter 15 safety analysis assumes the worst case PCMS single failure, which would aggravate the accident condition and is not blocked by safety functions.

7.7.2.5 Environmental Control System

Environmental control systems that are credited in the safety analysis are controlled by the PSMS, not the PCMS. Environmental control systems controlled by the PCMS, such as non-essential area HVAC, heat tracing, and/or forced air-cooling or heating, are considered in the failure analyses described above, refer to Subsections 7.7.2.3 and 7.7.2.4.

7.7.2.6 Use of Digital Systems

The PCMS and PSMS utilize the same basic software. In addition, the PCMS application software is developed using a structured process similar to that applied to development of the PSMS application software. This process includes an augmented quality program, including software V&V, for the following functions:

- Safety functions controlled by operational VDUs
- SPDS
- Alarms for credited manual operator actions
- SSA

Therefore, the potential for control system failures that could challenge safety systems or impact plant safety functions has been minimized.

7.8 Diverse Instrumentation and Control Systems

The DAS is the non-safety diverse instrumentation and control system for US-APWR. The DAS provides monitoring, control and actuation of safety and non-safety systems required to cope with abnormal plant conditions concurrent with a CCF that disables all functions of the PSMS and PCMS. The DAS includes an automatic actuation function, HSI functions located at the diverse HSI panel (DHP), and interfaces with the PSMS and PCMS. The design basis and detailed system description for the DAS are described in Topical Report MUAP-07006 (Reference 7.8-1). Table 7.8-7 shows the supplemental information to Topical Report MUAP-07006-P-A, which is necessary to be clarified. The Defense in Depth and Diversity Coping Analysis, Technical Report MUAP-07014 (Reference 7.8-2), demonstrates the ability to maintain all critical safety functions and achieve hot standby using the DAS.

The DAS design consists of conventional equipment that is totally diverse and independent from the MELTAC platform of the PSMS and PCMS, so that a beyond design basis CCF in these digital systems will not impair the DAS functions. In addition, the DAS includes internal redundancy to prevent spurious actuation of automatic and manual functions due to a single component failure. The DAS is also designed to prevent spurious actuations due to postulated earthquakes and postulated fires. The DAS interfaces with the safety process inputs and outputs of the SLS are isolated within these safety systems. In addition, hardwired Class 1E logic within the SLS (not affected by a CCF) ensures that control commands originating in the DAS or SLS, which correspond to the desired safety function, always have priority. Therefore, there is no adverse interaction of the DAS with safety functions and no erroneous signals resulting from CCF in the SLS that can prevent the safety function. For a figure of the DAS system architecture, refer to Figure 6.0-1 of Topical Report, MUAP-07006.

Within the DAS, manual actuation is provided for systems to maintain all critical safety functions (Refer to Table 7.8-1). For conditions where there is insufficient time for manual operator action, the DAS provides automatic actuation of required plant safety functions needed for accident mitigation. Key parameter indications, diverse audible and visual alarms, and provisions for manual controls are located in a dedicated independent DHP located in the MCR. Conventional hardwired logic hardware and relays for automatic actuation are located in two diverse automatic actuation cabinets (DAACs), each located in a separate room. Each DAAC is powered by a separate non-Class 1E UPS. During plant on-line operation, the system can be tested manually without causing component actuation that would disturb plant operations.

7.8.1 System Description

The DAS consists of manual HSI functions, which include~~ diverse leak detection, and~~ automatic actuation functions. These functions are located in the DHP and the DAAC, respectively. In addition, the DAS consists of interfacing connections with the PSMS and CRDM motor-generator sets. The DAS receives inputs from qualified analog isolators located in the RPS or directly from plant components. The DAS provides outputs which interface to the SLS power interface modules via qualified isolators located in the SLS or directly to plant components.

Once actuated, either manually or automatically, the DAS signals are latched at the system level. This ensures all DAS functions actuate to completion. The DAS latches can be reset from the defeat switch located on the OC.

The overall DAS architecture is described in Topical Report MUAP-07006 Section 4.0. For manual and automatic system level, actuations from the DAS refer to functional logic diagram Figure 7.2-2 sheet 14.

7.8.1.1 Diverse HSI Panel

The DHP, which is located in the MCR, consists of conventional hardwired switches, conventional indicators for key parameters of all critical safety functions, and audible and visual alarms. The DHP installed equipment is used for manual control and actuations credited in the defense in depth and diversity coping analysis. Actuation status of each safety system actuated from the DHP can be confirmed by monitoring the safety function process parameters displayed on the DHP. The DHP is powered by a non-Class 1E UPS and located in the MCR. Therefore, the DHP is qualified as Seismic Category II.

7.8.1.1.1 Manual Actuation Switches

System level manual actuation is provided on the DHP for all automated functions and for systems required to maintain critical safety functions, which may not be automatically actuated. The following manual actuations are provided from conventional switches on the DHP:

- Reactor trip/turbine trip/MFW isolation: one switch
- EFW actuation: one switch
- ECCS: one switch
- Containment isolation: one switch
- EFW isolation and flow control: four switches (one per SG)
- Control of main steam depressurization valve: four switches (one per SG)
- Control of safety depressurization valve: one switch

To prevent spurious actuation due to a failure of any of the above switches, a separate manual actuation permissive switch is provided. This is referred to as the “Permissive Switch for DAS HSI.” The permissive switch is located in the MCR, but physically separated from the DHP to minimize the affect of fire propagation. The DAS permissive switch is powered by a non-Class 1E UPS that is separate from the power to the DHP. Signals from the manual actuation switches and permissive switch are interfaced separately from the MCR to each DAAC; refer to Topical Report MUAP-07006 Section 6.0. To prevent spurious DAS actuation due to the MCR fire, all DAS manual actuation signals are blocked when the MCR/RSR transfer is activated, refer to ~~Topical Report~~ MUAP-07004 (Reference 7.8-3) Figure 4.2-1.

The manual actuation switches listed above are sufficient to take all manual actions credited in Technical Report MUAP-07014, which demonstrates the ability to maintain all critical safety functions and achieve hot standby. Hot standby can be maintained for an extended period-of-time by direct operation of local power distribution and switching devices that are not affected by the CCF in the PSMS.

7.8.1.1.2 Alarms

When the DAS system level actuation signals are generated for (1) reactor trip, turbine trip, and MFW isolation, or for (2) EFW actuation are generated, a summary alarm for these functions is also actuated on the DHP. The diverse audible alarm is activated to notify the operators. The first out alarm panel, on the DHP, indicates the specific input parameter that has caused the system level actuation.

Failure information about the DAS, such as power supply failure, or module de-energization or removal, is alarmed as a “DAS failure summary alarm” on the Alarm VDU in the MCR. The configuration of the DAS alarms is described in Topical Report MUAP-07006 Section 6.2.2.1. High main steam radiation (N16) and high-high steam generator water level are alarmed and indicated on DHP. Technical Report MUAP-07014 provides the specific information of the alarm credited for D3 coping analysis.

7.8.1.1.3 Indicators

The analog indicators provided on the DHP are identified in Table 7.8-2. These indicators are sufficient to support all manual control actions credited in Technical Report MUAP-07014, which demonstrates the ability to maintain all critical safety functions, and achieve and maintain hot standby.

~~The DHP also provides indicators for RCS leakage, as described below.~~

7.8.1.2 Diverse Automatic Actuation Cabinet

Each DAAC provides for automatic actuation of critical systems, which are required to be actuated within first 10 minutes of an event (refer to Table 7.8-3 for system actuation times). The defense in depth and diversity coping analysis provides justification for manual operator actions credited after 10 minutes.

Safety sensors selected by the plant design for the DAS input are interfaced from within the PSMS or PCMS input modules. These input modules utilize analog distribution modules and isolation modules that connect the input signals to the DAS prior to any digital processing. Therefore, a software CCF within the PSMS or PCMS does not affect the DAS automation function or the display of plant parameters on the DHP. The MELTAC input module design of the PSMS or PCMS is described in Topical Report MUAP-07005 (Reference 7.8-4) Section 4.0.

The DAS has two analog logic subsystems, one each located in one of the two DAACs.

Within each DAAC, input signals are compared to their setpoint values and if the monitored value is greater than or less than its setpoint, a partial trip/actuation signal is

- Minimize the extent of software CCF
- Minimize the effects of software CCF
- Minimize the potential for adverse interaction

A detailed description of each principle is provided in Topical Report MUAP-07006 Section 5.0.

7.8.2.9 Fire Protection

Fire protection for the DAS is described in ~~Topical Report~~ MUAP-07004 Sections 5.2.3 and 6.5.8.

7.8.3 Analysis

7.8.3.1 Anticipated Transient without Scram

In accordance with 10 CFR 50.62 (Reference 7.8-6), the DAS is diverse from the RT system to initiate turbine trip and EFW actuation. Although not required by 10 CFR 50.62 for all reactors, MHI's defense in depth and diversity approach also includes a diverse RT function for ATWS mitigation.

A detailed discussion of conformance of to 10 CFR 50.62 is provided in Topical Report MUAP-07006 Appendix B.

7.8.3.2 Adequacy of Manual Controls and Displays

Technical Report MUAP-07014 defines the alarms, indicators and controls required on the DHP for the operator to take manual actions credited for mitigating each AOO and PA included in Chapter 15, place the nuclear plant in a hot standby condition, and monitor and control the following critical safety functions:

- Reactivity control
- Core heat removal
- Reactor coolant inventory control
- Containment integrity
- RCS inventory control
- Secondary heat sink

Technical Report MUAP-07014 also confirms that there is sufficient time for all credited manual operator actions. The HSI on the DHP is designed, verified, and validated in accordance with the HFE program described in Chapter 18.

There is one safety bus for each train. Each safety bus is used only within the same train.

7.9.1.1.2 Unit Bus

The unit bus provides non-safety data communication between all I&C systems. The main signals transmitted through the unit bus are:

- Manual operation signals transmitted from the operational VDUs in the MCR and RSR to the PSMS and PCMS. Signals to the PSMS are blocked by logic in the PSMS, which ensures priority of all safety functions.
- Signals transmitted from the PCMS to PSMS for interlocks and automatic control of safety components during normal operation. These signals are blocked by logic in the PSMS, which ensures priority of all safety functions.
- Process and alarm signals transmitted from the PSMS and PCMS to the LDP and VDUs in all operating locations, MCR, RSR, and TSC and to the computer systems such as process recording computer system, alarm processor system, etc.
- Shared sensor signals, such as pressurizer pressure, and shared calculated signals, such as T_{avg}, are transmitted from each PSMS division to the PCMS.

Signals interfaced between the PSMS and PCMS use qualified E/O isolators that are part of the safety system. In addition, communication and functional isolation are provided, within the PSMS, for signals sent from the PCMS to PSMS, such as process control signals and signals from operational VDUs. These signals are interfaced via redundant communication subsystems within the PSMS, which provide the communication interface between the unit bus and all PSMS controllers for non-safety control signals that originate in the PCMS.

Further details on communication independence are discussed in ~~Topical Report~~ MUAP-07004 (Reference 7.9-2) Appendix B.5.6.

7.9.1.2 Safety VDU Communication

The safety VDU has two interfaces with the safety VDU processor:

- Conventional red/green/blue video signals are interfaced through a frame memory unit module within the safety VDU processor.
- The safety VDU touch panel is interfaced to the safety VDU processor through a touch panel interface module, which provides a conventional point-to-point data link.

NQA-1-1994 (Reference 7.9-3). Conformance to ASME NQA-1-1994 is described further in Chapter 17.

The PCMS includes the unit bus, data links, I/O Bus, and the PCMS computers. The PCMS data communications uses the same hardware as the PSMS. The PCMS has a similar quality program to the PSMS, without the same level of documentation.

7.9.2.2 Software Quality

The safety related portions of the DCS are part of the PSMS. The non-safety related portions of the DCS are part of the PCMS. All portions of the DCS consist of MELTAC basic software, which handles the communication protocol and self-diagnostics, and application software, which handles the actual data being transmitted.

MHI applies its MELCO's safety system digital platform MELTAC to PSMS and PCMS systems of US-APWR. Details of the software quality program for the MELTAC basic software are discussed in Topical Report MUAP-07005 Section 6.0. A summary of the software quality program for the PSMS application software is discussed in ~~Topical Report~~ MUAP-07004 Section 6.0. A description of the application software quality program is provided in the Software Program Manual for US-APWR Technical Report MUAP-07017 (Reference 7.9-4).

The Software Program Manual Technical Report MUAP-07017, describes the processes, which ensure the reliability and design quality of the PSMS application software throughout its entire software lifecycle. MUAP-07017 also provides the software program plans based on the guidance of BTP 7-14. By following this SPM, the PSMS application software achieves high functionality and high quality including data communication systems as follows.

- Application software for the PSMS achieves a quality level expected for nuclear plant safety functions.
- Application software provides the required safety functions.
- The processes and procedures described in MUAP-07017 are based on established technical and document control requirements, practices, rules and industrial standards.

7.9.2.3 Performance Requirements

DCS in digital I&C system of the US-APWR meets the performance of required functions. The performance of the digital I&C system including DCS conforms to the guideline of BTP 7-21(Reference 7.9-15). Technical Report MUAP-09021 (Reference 7.9-16) provides the response time of safety I&C system. The report demonstrates that the safety I&C system meets the response time requirement from safety analysis. The simplified block diagrams of the RT and ESF functions propagation paths and response time of each path in the safety I&C system are provided. The conformance of BTP 7-21 and how the safety I&C system meets the performance requirements are also addressed in MUAP-09021.

7.9.2.3.1 System Deterministic Timing

All DCS communication protocols allow calculation of a deterministic data communication response time. The time calculation includes the number of nodes on the network, data traffic, network topology, node processing cycle time, and network throughput. The methods used for real-time performance calculations are described in Topical Report MUAP-07005 Section 4.4.

7.9.2.3.2 Real-Time Performance

Real-time performance is determined by performing response time analysis for all safety functions. For each safety function an analysis has been performed which demonstrates the actual system response time is less than the response time required by the plant safety analyses. Refer to~~ Topical Report~~ MUAP-07004 Section 6.5.2 for the related details. Response times for the RPS and ESFAS functions are listed in Tables 7.2-3 and 7.3-4 respectively.

7.9.2.3.3 Time Delays within the DCS

Data propagation delays due to data communication in the DCS are incorporated into response time analysis. Response time calculations, which encompass the controller and all components connected to the DCS, include these data propagation delays. DCS response time calculations are validated through sample tests, during system integration testing, refer to~~ Topical Report~~ MUAP-07004 Section 6.5.3.

7.9.2.3.4 Data Rates and Bandwidth

The data rates and bandwidths for the sections of the DCS are listed in Topical Report MUAP-07005 as follows:

- Control network: Table 4.3-2.
- Data links: Section 4.3.3.
- Maintenance network: Section 4.1.4.2.
- I/O bus: Appendix A.3.
- Safety VDU communication: Appendix A.11 and A.12.

7.9.2.3.5 Interfaces with other DCS

The only interface from the DCS to external networks is via the firewall within the unit management computer. The unit management computer provides an outbound only

interface to the plant station bus to allow communication to the EOF computers, the NRC (via ERDS), corporate information systems, and plant personnel computers.

7.9.2.3.6 Test Results

MELTAC platform testing demonstrates that the DCS meets all generic qualification requirements, refer to Topical Report MUAP-7005 Section 5.0. Qualification analysis demonstrates that the generic qualification testing bounds all US-APWR conditions.

The PCMS and PSMS factory test phase demonstrates that the DCS meets all US-APWR application performance requirements, refer to ~~Topical Report~~ MUAP-07004 Section 6.1.

7.9.2.3.7 Communication Protocols

All communication protocols selected for the DCS are able to support all demands from interfacing systems. Refer to Topical Report MUAP-07005 Section 4.0 and Appendix A for further details on the specific communication protocols used in each network of the DCS including capabilities, bandwidth, and data rates.

7.9.2.4 Potential Hazards and Single Failures

The self-diagnostic features described in ~~Topical Report~~ MUAP-07004 Section 4.3, detect DCS errors or failures. The MELTAC controller has separate self-diagnostic features for each of the DCS related modules as described in Topical Report MUAP-07005 Section 4.1.5 and Section 4.3. All DCS errors and failures are analyzed in the FMEA, which demonstrates that there are no single failures that can result in loss of the safety function. The FMEA identifies errors or failures that can result in failures or inadvertent actuation of single divisions, which are bounded by the plant safety analysis.

In addition, the safety controllers within the PSMS include electrical and communication isolation to ensure that the deterministic processing of the safety functions can not be affected due to failures or communication errors from the unit bus or maintenance network. Table 7.2-8 and Table 7.3-7 which shows the FMEA for reactor trip and ESF actuation in the PSMS include failure mode and effects of the DCSs.

7.9.2.5 Control of Access

Software can only be changed using the engineering tool connected to the maintenance network. The engineering tool is physically secured in the I&C rooms and plant maintenance facilities. There is no external electronic interface to the maintenance network or the engineering tool. In addition, software for any controller can only be changed when its write permission switch is selected to write-enable. The write permission switch is secured in locked cabinets within the I&C rooms. Accesses to all of these areas have security controls and alarms. (SRI)

7.9.2.7 Independence

The DCS ensures electrical independence between PSMS divisions and between the PSMS and PCMS. In addition, electrical independence is maintained within the PSMS and PCMS, where the communication interfaces cross fire areas of the MCR and RSR.

Each PSMS and PCMS controller/processor protects itself against DCS errors or failures that could disrupt its internal application functions, thereby ensuring communications independence. For more detailed discussion on the methods used to ensure independence between digital systems in different safety trains and between safety and non-safety systems refer to Subsections 7.1.3.4 and 7.1.3.5, and ~~Topical Report~~ MUAP-07004 Appendix A.5.6 and Appendix B.5.6.

All PSMS DCS cables, with the exception of its maintenance networks, are routed in accordance with IEEE Std 384-1992 (Reference 7.9-5) to ensure physical independence of each division. PSMS maintenance network cables, which are non-safety, are routed with other non-safety cables, including PCMS DCS cables.

7.9.2.8 Fail Safe Failure Modes

In general, controllers take no automatic fail-safe actions in response to failures in the unit bus, safety bus, data links, or I/O Bus. This means that inputs to control algorithms are considered to remain in the state prior to the DCS failure, and outputs from controllers remain in their state prior to the DCS failure. All DCS failures are alarmed so that operators can take appropriate manual actions. These actions may include setting signals to trip or maintenance bypass status, and declaring appropriate Technical Specification inoperable status. Where failures affect only one of two redundant buses, actions may be limited to only initiating work orders for maintenance repairs.

The RPS controllers take fail-safe actions in response to failures in multiple data links, between the RPS trains, that result in loss of data to the 2-out-of-4 voting logic within each train. On the first failure (or bypassed data link) the voting logic becomes 2-out-of-3. On the second failure (or bypassed data link) the voting logic becomes 1-out-of-2. Failure (or bypass) of a third link will generate a trip based on this 1-out-of-2 logic. In addition, outputs from the RPS controllers to the RTBs will fail in a state that initiates opening of the RTBs if there is a failure of the I/O bus. This design satisfies the fail-safe requirements of 10 CFR 50 Appendix A, GDC 23 (Reference 7.9-6).

Alarms are provided for the DCS failures. Unique alarms are provided for DCS failures that affect inputs to the RPS voting logic from multiple divisions. For example, unique alarms are provided if an RPS controller detects two or more data link failures or a single data link failure when one of its own process parameters is already in a maintenance bypass condition.

7.9.2.9 System Testing and Surveillances

The MELTAC controller has separate self-diagnostic features for each of the DCS related modules; refer to Topical Report MUAP-07005 Section 4.1.5 and Section 4.3. There are no periodic manual surveillance tests required for DCS functions.

7.9.2.10 Bypass and Inoperable Status Indications

There are no manual bypasses for any functions of the DCS. DCS failures are alarmed on the operational and alarm VDUs.

7.9.2.11 EMI/RFI Susceptibility

The PSMS DCS is qualified to the EMI/RFI testing requirements of RG 1.180 (Reference 7.9-7), refer to Topical Report MUAP-07005 Section 5.3.

The PCMS DCS uses the same hardware and software components as the PSMS DCS.

7.9.2.12 Defense-In-Depth and Diversity

There is no credit for continued the DCS operability in the defense in depth and diversity coping analysis (i.e., the DCS is assumed to fail due to CCF). The DCS is not used by the conventional analog and hardwired DAS. A discussion on defense in depth and diversity is provided in Topical Report MUAP-07006 (Reference 7.9-8).

7.9.2.13 Seismic Hazards

All safety-related DCS components and hardware are Class 1E qualified and are in an appropriately qualified structure. Where non-safety portions of the DCS interface with the safety portions, qualified isolators are used which preserve the seismic qualifications of the safety-related portions. Refer to Topical Report MUAP-07005 Section 4.1 and 5.2 for the related details.

The operational VDUs and unit bus are also tested to demonstrate operability after an SSE. In addition, the testing demonstrates that there are no erroneous signals generated that can adversely affect the PSMS or PCMS systems.

7.9.3 Analysis

Detailed compliance to the GDC, IEEE Std 603-1991 (Reference 7.9-9) and IEEE Std 7-4.3.2-2003 (Reference 7.9-10) are described in ~~Topical Report~~ MUAP-07004 Section 3.0, Appendix A and B.

The FMEA demonstrates that failures in the DCS do not adversely affect the safety function of the PSMS or cause erroneous safety function actuation, refer to Topical Report MUAP-07005 Section 7.4.

Chapter 8

US-APWR DCD Chapter 8 Rev. 2, Tracking Report Rev. 3 Change List

Page	Location (e.g., subsection with paragraph/sentence/ Item, table with column/row, or figure)	Description of Change
8.3-39	Subsection 8.3.1.1.3.8 Item 4.e	Reflection of missing RAI impact (No.386, Question No. 08.03.01-29) Replaced "Demonstrate maximum expected load-carrying capability for 24 hours, of which 22 hours are at a load equivalent to the maximum expected loading of the Class 1E GTG and 2 hours at a load equivalent to or greater than 105 % of the maximum expected loading of the Class 1E GTG." with "Demonstrate maximum expected load-carrying capability for 24 hours, of which 22 hours are at a load equivalent to the 90 – 100 % of the continuous rating of the Class 1E GTG and 2 hours at a load equivalent to or greater than 105 % of continuous rating of the Class 1E GTG." .
8.3-63	Table 8.3.1-1 (Sheet 2 of 3) Item 6	Reflection of missing Rev.2 revision Replaced Rated current "5600A" with "5900A"
8.3-76	Table 8.3.1-7 (Sheet 2 of 4)	Editorial: deleted unnecessary duplicated description Deleted "B-Emergency Lighting Transformer"
8.3-77	Table 8.3.1-7 (Sheet 3 of 4)	Editorial: deleted unnecessary duplicated description Deleted "C-Emergency Lighting Transformer"
8.3-100	Table 8.3.2-3 (Sheet 2 of 2) Item c.	Reflection of missing Rev.2 revision Replaced short circuit current "40kA" with "50kA" for bottom line battery charger.

a. Demonstrate that on loss of offsite power the Class 1E buses are de-energized and that the loads are shed from the Class 1E buses in accordance with design requirements.

b. Demonstrate that on loss of offsite power the Class 1E GTGs start on the auto start signal, load shed occurs, the Class 1E buses are energized along with SSTs, the auto connected shutdown loads are energized through the load sequencer, and the system operates for 5 minutes while the Class 1E buses are loaded with the shutdown loads.

c. Demonstrate that on an engineered safety features actuation signal (without loss of offsite power) the Class 1E GTGs start on the auto start signal and operate on standby for 5 minutes.

d. Demonstrate that on loss of offsite power, in conjunction with an engineered safety features actuation signal, the Class 1E GTGs start on the auto start signal, load shedding occurs, the emergency buses are energized along with SSTs, the auto connected emergency (accident) loads are energized through the load sequencer, and the system operates for 5 minutes while the Class 1E GTGs are loaded with the emergency loads.

e. Demonstrate ~~maximum expected~~ load-carrying capability for 24 hours, of which 22 hours are at a load equivalent to ~~the~~ 90 – 100 % of the continuous rating~~maximum expected loading~~ of the Class 1E GTG and 2 hours at a load equivalent to or greater than 105 % of the ~~maximum expected loading~~continuous rating of the Class 1E GTG.

f. Demonstrate functional capability at full load temperature conditions by verifying the Class 1E GTG starts upon receipt of a manual or auto-start signal, and the generator voltage and frequency are attained within the required time limits.

g. Demonstrate proper operation during Class 1E GTG load shedding, including a test of the loss of the largest single load and of complete loss of load. Verify that the overspeed limit is not exceeded.

h. Demonstrate the ability to:

- Synchronize the Class 1E GTG unit with the offsite system while the unit is connected to the emergency load.
- Transfer the emergency load to the offsite system.
- Restore the Class 1E GTG to standby status.

i. Demonstrate that the fuel transfer pumps transfer fuel from each fuel storage tank to the day tank of each Class 1E GTG.

j. Demonstrate that, with the Class 1E GTG operating in a test mode and connected to its Class 1E bus, a simulated ECCS signal overrides the test mode by: (1)

Table 8.3.1-1 Electrical Equipment Ratings - Component Data (Sheet 2 of 3)

Main ac Power System (Nominal Values)

4.	Generator Load Break Switch (GLBS) Rated Voltage Rated Current Rated Frequency	 Over 27.3kV Over 44.4kA 60Hz
5.	Isolated Phase Busduct (IPB) – Main Circuit Type Rated voltage Rated current Rated frequency	 Forced air cooling Over 27.3kV Over 44.4kA 60Hz
6.	Isolated Phase Busduct (IPB) – Branch Circuit Type Rated voltage Rated current Rated frequency	 Forced air cooling Over 27.3kV Over ~~5600A~~5900A 60Hz
7.	13.8kV Medium Voltage System	Non-Class 1E
	Switchgear Type Rated current	N1 & N2 Metal Clad 3000A
	Circuit Breaker Maximum voltage Rated short-circuit current Peak current (C & L crest) Control power	 15kV 50kA 130kA 125V dc

Table 8.3.1-7 Electrical Load Distribution - Class 1E MCC Loads (Sheet 2 of 4)

B-MCC

B-Motor Control Center		
Name	**Rated Output [kW]**	
B-Class 1E Gas Turbine Generator Auxiliary Panel	68	
B-Emergency Feed Water Pump (M/D) Area Air Handling Unit	8.5	
B-Essential Chiller Unit Control Panel	2	kVA
B-Essential Chilled Water Pump	53	
B-UPS Unit	50	kVA
B-I&C Power Transformer	50	kVA
B-Main Control Room Air Handling Unit	13	
B-Main Control Room Electrical Reheating Coil	46	
B-Safeguard Component Area Air Handling Unit	9	
B-Class 1E Battery Room Exhaust Fan	1.5	
~~B-Emergency Lighting Transformer~~	~~10~~	~~kVA~~
B-Battery Charger	125	kVA
B-Safety Injection Pump Auxiliary Oil Pump	1.5	
B-Class 1E I&C Room Electrical Reheating Coil	12	
B-Emergency Feed Water Pump (M/D) Area Electric Heater	8.5	
B-Emergency Lighting Transformer	10	kVA

Note: This table doesn't show MOVs and all loads.

Table 8.3.1-7 Electrical Load Distribution - Class 1E MCC Loads (Sheet 3 of 4)

C-MCC

C-Motor Control Center		
Name	**Rated Output [kW]**	
C-Class 1E Gas Turbine Generator Auxiliary Panel	68	
C-Emergency Feed Water Pump (M/D) Area Air Handling Unit	8.5	
C-Essential Chiller Unit Control Panel	2	kVA
C-Essential Chilled Water Pump	53	
C-UPS Unit	50	kVA
C-I&C Power Transformer	50	kVA
C-Main Control Room Air Handling Unit	13	
C-Main Control Room Electrical Reheating Coil	46	
C-Safeguard Component Area Air Handling Unit	9	
C-Class 1E Battery Room Exhaust Fan	1.5	
~~C-Emergency Lighting Transformer~~	~~10~~	~~kVA~~
C-Battery Charger	125	kVA
C-Safety Injection Pump Auxiliary Oil Pump	1.5	
C-Class 1E I&C Room Electrical Reheating Coil	12	
C-Emergency Feed Water Pump (M/D) Area Electric Heater	8.5	
C- Emergency Lighting Transformer	10	kVA

Note: This table doesn't show MOVs and all loads.

Table 8.3.2-3 Electrical Equipment Ratings - Component Data (Sheet 2 of 2)

Non-Class 1E DC Power System

(Nominal Values)

a. Battery Bank 2 - 125Vdc 60 flooded lead acid cells, 3600Ah*, float voltage 2.25V/cell, equalize voltage 2.33V/cell, 8 hr rating 1 - 125Vdc 60 flooded lead acid cells, 2400Ah*, float voltage 2.25V/cell, equalize voltage 2.33V/cell, 8 hr rating 1 - 125Vdc 60 flooded lead acid cells, 4300Ah*, float voltage 2.25V/cell, equalize voltage 2.33V/cell, 8 hr rating
b. Battery Charger 4 - ac input – 480V, 3 phase, 60Hz; dc output – 125Vdc, 200A Continuous; float voltage – 135V, equalizing charge voltage 140V, 24hr recharge
c. Switchboard 1 – 125Vdc, Main Bus 2000A, 40kA short circuit 1 – 125Vdc, Main Bus 3000A, 40kA short circuit 1 – 125Vdc, Main Bus 1600A, 40kA short circuit 1 – 125Vdc, Main Bus 2000A, ~~40kA~~ 50kA short circuit
d. Spare Battery Charger 2 - ac input – 480V, 3 phase, 60Hz; dc output – 125Vdc, 200A Continuous; float voltage – 135V, equalizing charge voltage 140V, 24hr recharge

*: Actual Ah rating is decided in accordance with manufacturer's specification.

Chapter 9

Page	Location (e.g., subsection with paragraph/sentence/ Item, table with column/row, or figure)	Description of Change
9.2-41	Subsection 9.2.7.3.2	RAI No.552-4358, Question No. 06.02.06-30 Add the following to last paragraph. “The containment isolation valves and the piping between containment isolation valves are designed and constructed to requirements of ASME III, Class 2 and Seismic Category I.”
9.2-94	Subsection 9.2.6 Figure 9.2.6-1	RAI No.567-4326, Question No. 09.02.02-46 Replaced the TCS stand pipe makeup water source.
9.3-39	Subsection 9.3.4.3	RAI No.526-4121 Question No.09.03.02-15 Delete the sentence as below because the provision for a leakage detection and control program in accordance with 10 CFR 50.34 (f) (xxxvi) does apply. “Therefore, the provision for a leakage detection and control program in accordance with 10 CFR 50.34 (f) (xxxvi) does not apply.”
9.4-14	Subsection 9.4.3.2.1	RAI No.539-4329 Question No.09.04.02-4 Addition of the description of design features which all radiological controlled areas including the fuel handling area served by the A/B HVAC system are maintained under a constant negative pressure.
9.4-15	Subsection 9.4.3.2.1	RAI No.539-4329 Question No.09.04.02-5 Remove the following at tenth paragraph “Therefore, compliance with GDC 60 and 61 is not required for the postulated fuel handling accident condition.”
9.4-46	Subsection 9.4.6.3.4	RAI No.558-4227 Question No.06.05.01-13 Add the following to first paragraph. “Failure mode and effects analysis Table 9.4.6-2 concludes that no single failure coincident with a LOOP compromises the system’s safety functions.”
9.4-47	Subsection 9.4.6.3.4	RAI No.558-4227 Question No.06.05.01-12 Add the following to last paragraph. “Upon receipt of a containment low volume purge system low airflow alarm following closure of the containment isolation valves, the containment low volume purge air handling units and associated exhaust fans will be manually shut down.”

Page	Location (e.g., subsection with paragraph/sentence/ Item, table with column/row, or figure)	Description of Change
9.4-49	Subsection 9.4.6.5.3	RAI No.558-4227 Question No.06.05.01-14 Add the following to the paragraph. "· Sensor on cooling fan corresponding alarm for high vibrations."
9.4-52	Subsection 9.4.8	RAI No.558-4227 Question No.06.05.01-11 Add the following to the subsection. "9.4.8-27 General Design Criteria for Nuclear Power Plants, NRC Regulation Title 10, Code of Federal Regulations, 10 CFR Part 50, Appendix A. 9.4.8-28 Seismic Design Classification, Regulatory Guide 1.29 Revision 4, March 2007."
9.4-78-79	Table 9.4.6-2	RAI No.558-4227 Question No.06.05.01-13 Add Table 9.4.6-2.
9.4-81	Figure 9.4.3-1	RAI No.539-4329 Question No.09.04.02-4 Revised Figure 9.4.3-1.
9.5-44	Subsection 9.5.7.2	RAI No.556-4269 QUESTION NO.: 09.05.07-24 Add the following to the 3rd paragraph. "with rated load operation of the GT including consideration for increased lube oil consumption during design life with appropriate maintenance. The minimum lube oil inventory for seven days full-load operation is 81 gal."
9A-246	Subsection 9A.3.131 FA6-101 Turbine Building Smoke Control Features The first sentence	RAI No.541-4346, Question No. 09.04.04-5 Replaced "The T/B is provides with automatic opening smoke vents in the building roof." with "The turbine building area ventilation system is manually actuated to purge the area of smoke.".

Page	Location (e.g., subsection with paragraph/sentence/ Item, table with column/row, or figure)	Description of Change
9A-246	Subsection 9A.3.131 FA6-101 Turbine Building Smoke Control Features The second sentence	RAI No.541-4346, Question No. 09.04.04-5 Inserted “and standard fire fighting techniques”.
9A-476 through 479, 481 through 484, 491 through 494, 497 through 500	Table 9A-2 Power Source Fuel Storage Vault FA3-103-01, 02 FA7-104-01, 02 FA7-109-01, 02 FA7-111-01, 02	RAI No.537-4298, Question No.09.05.01-19 Description is modified as follows; The specific fire zones with unprotected openings between fire zones are identified.
9A-571 through 576	Table 9A-2 Power Source Fuel Storage Vault FA7-401-01 FA7-402-01 FA7-403-01 FA7-404-01 FA7-405-01 FA7-406-01	RAI No.537-4298, Question No.09.05.01-18 Description is modified as follows; The automatic heat detection is deleted and the use of a vapor and liquid detection system is identified to consistent with the description of each fire area in Section 9A.3.

The essential chilled water system is protected from natural phenomenon by virtue of its location in a seismic category I structure.

9.2.7.3.2 Non-Essential Chilled Water System

With the exception of piping and valves between and including the containment isolation valves, the system does not perform any safety function.

The containment isolation valves and the piping between containment isolation valves are designed and constructed to requirements of ASME III, Class 2 and Seismic Category I.

9.2.7.4 Testing and Inspection Requirements

9.2.7.4.1 Essential Chilled Water System

Chillers and chilled water pumps are hydrostatically tested in accordance with ASME Section III.

The system is provided with adequate instrumentation, temperature and pressure indicating devices to facilitate testing and verification of equipment heat transfer capability and flow blockage.

Preoperational testing of the essential chilled water system is performed as described in Chapter 14, Verification Programs, to verify that system is installed in accordance with programs and specifications. The system is hydrostatically tested and is functionally tested to verify that pump is activated on the appropriate signals. The pumps are tested to verify performance.

During normal operation, the standby trains are periodically tested for operability or, alternatively, placed in service in place of the train that has been operating.

Descriptions of the testing and inspection programs for pumps and valves are provided in Chapter 3, Subsection 3.9.6, Functional Design, Qualification, and In-Service Testing Programs for Pumps, Valves and Dynamic Restraints.

The description of the inspection and testing of equipment class 3 components is provided Chapter 6, Section 6.6 Inservice Inspection of Class 2 and 3 Components.

9.2.7.4.2 Non-Essential Chilled Water System

The chillers, chilled water pumps, and condenser water pumps are hydrostatically tested in accordance with ASME Section VIII.

The system is provided with adequate instrumentation, temperature and pressure indicating devices to facilitate testing and verification of equipment heat transfer capability and flow blockage.

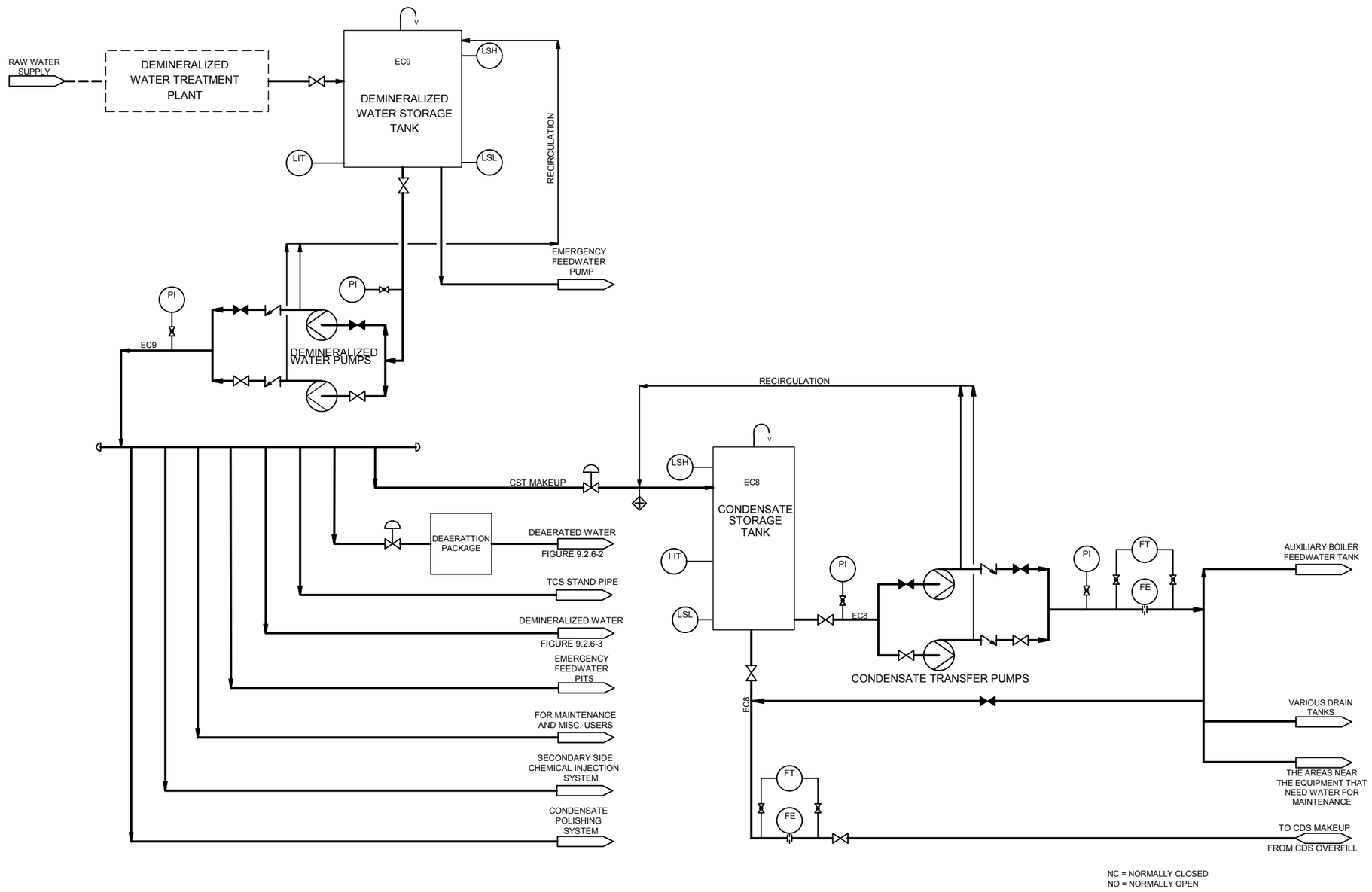

Figure 9.2.6-1 Condensate Storage Facilities System Flow Diagram

containment incorporate valves and piping arrangements that meet the containment isolation criteria described in subsection 6.2.4. Containment isolation valves in the CVCS are required to operate under accident conditions to provide containment isolation,as required.

Since the CVCS supplies non-borated water to the RCS, the potential for inadvertent boron dilution events exists. The design feature for preventing an inadvertent boron dilution is described in Subsection 9.3.4.2.7.6.

The charging line is isolated on a safety injection signal and a Pressurizer high water level signal, to terminate unnecessary RCS makeup that can cause an overfilling of the pressurizer and steam generator overfilling during a steam generator tube rupture.

During a SBO, the reactor coolant pumps seal integrity is maintained until the charging pumps are powered from an alternate power source and seal water injection restarts using the normal seal injection flow path.

The CVCS is designed to provide makeup for minor leaks in the RCS. The makeup capability is limited to the leakage equivalent to a pipe break with 3/8 inch inside diameter.

The CVCS does not provide an ECCS function.~~ Therefore, the provision for a leakage detection and control program in accordance with 10 CFR 50.34 (f) (xxvi) does not apply.~~

CVCS components and piping are compatible with the radioactive fluids they contain and the functions they perform. The equipment classification for the CVCS is contained in Section 3.2.

The CVCS is designed to ensure that the boric acid solution remains soluble. Heat tracing or a heated area with temperature alarms are provided for portions of the system which normally contain 4 wt. % of boric acid solution, to assure that boric acid solution temperature does not go below 65 °F.

The VCT is designed to withstand vacuum conditions to prevent wall inward buckling and failure. The boric acid tanks are provided with vacuum breakers to prevent a vacuum condition. The holdup tanks are provided with sufficient nitrogen gas supply to prevent vacuum condition.

The CVCS is designed in accordance with the requirements of 10 CFR 50, Appendix A, GDCs are GDC 1, 2, 14, 33, 60, and 61.

The protection of safety-related portions of CVCS against natural phenomena and internal missiles is addressed in the following sections in Chapter 3:

Section 3.3, Wind and tornado loadings;

Section 3.4, Water level (Flood) protection;

Section 3.5, Missile protection;

direction of airflow, a low efficiency pre-filter, a medium efficiency filter, a steam heating coil, a chilled water cooling coil, a supply fan and associated controls. The cooling coil of each air handling unit is supplied with chilled water from the non-essential chilled water system (Section 9.2.7). Both air handling units are connected to a common air distribution ductwork through discharge air isolation dampers.

The exhaust airflows from the served areas are drawn through air ductwork, by three auxiliary building exhaust fans, each sized for 50% of the total system airflow. Each exhaust fan is equipped with an isolation damper and discharge ductwork leading to the vent stack.

The penetration of the penetration and safeguard component area and the discharge duct of the auxiliary building HVAC system are provided with safety-related isolation dampers that automatically close upon receipt of the ECCS actuation signal. The penetration and safeguard component area supply and exhaust line isolation damper assemblies, and the auxiliary building HVAC system exhaust line isolation damper assemblies are equipment class 2, seismic category I.

There is no separate spent fuel pool ventilation system. The fuel handling area in the reactor building is serviced by the auxiliary building HVAC system. There are supply and exhaust ductwork branches from the auxiliary building HVAC system that enter into the fuel handing area. The exhaust air duct from the fuel handling area is monitored for airborne radioactivity (Subsection 12.3.4.2.8).

During normal plant operation, the two air handling units and two exhaust fans are placed into operation. The total supply airflow of two air handling units is 196,000 ft^3/min and the total exhaust airflow of two exhaust fans is 208,000 ft^3/min. Upon energizing the air handling unit, its isolation dampers automatically open. Upon energizing the two exhaust fans, their airflow is continuously and automatically controlled at a predetermined value to maintain a slightly negative pressure in the controlled areas within A/B, R/B, including the fuel handling area, and AC/B to minimize exfiltration from the radiological ~~radiologically~~ controlled areas. The fuel handling area is supplied airflow of 21,800 ft^3/min from auxiliary building HVAC system air handling units and exhausts an airflow of 24,000 ft^3/min from this area. The airflow to radiological controlled area is adjusted by the balancing damper located in supply and exhaust duct branch throughout the system.

In summer, the outside supply airflow is cooled by the air handling unit's chilled water cooling coil. Upon supply air temperature rise, as sensed by thermostats located in the supply air duct, the air handling unit's chilled water control valves allow for an increase in the chilled water flow through the cooling coils.

In winter, the supply air is heated by the air handling unit steam heating coil to maintain the supply air temperature at the design set point. Supplemental heating with local unit heaters or in-duct heaters, that are non-safety related equipment and locally installed, is provided in areas with higher heat loss, due to their proximity to exterior walls.

Airborne radioactivity is monitored inside the exhaust air duct form the fuel handling area, penetration and safeguard component area, R/B controlled area, A/B controlled area, and sampling/laboratory area (AC/B controlled area) (Subsection 12.3.4.2.8). An alarm will

be actuated in the MCR when the radiation levels exceed a predetermined value. If this event occurs, the normal supply and exhaust from the affected area is manually isolated, remotely from the MCR, and the exhaust flow is manually diverted, remotely from the MCR, to the containment low volume purge filtration exhaust system (Section 9.4.6) for the following areas: the penetration and safeguard component area, fuel handling area, R/B controlled area, A/B controlled area, and sampling/laboratory area. The airflow from the containment low volume purge exhaust filtration unit exhausts through the vent stack, which also contains radiation monitors. These radiation monitors are used during all modes of operation. This design complies with GDC 64, Monitoring Radioactivity Releases, and GDC 63, Monitoring fuel and waste storage, as indicated in Section 11.5.

This redirects normal exhaust from radiological controlled area to HEPA and charcoal absorber filters in the containment low volume purge system. Thereby, this system arrangement meets the requirements of GDC 61 for normal plant conditions.

The auxiliary building HVAC system and containment low volume purge system arrangement for the fuel handling area meets the GDC 60 requirements for normal plant operation based on compliance with RG 1.140. However, based on the fuel handling accident analysis (Section 15.7.4) no credit is given for any filtration of released radionuclide's and the calculated offsite dose is well within the guideline dose limit values of 10 CFR 50.34. ~~Therefore, compliance with GDC 60 and 61 is not required for the postulated fuel handling accident condition~~.

Airborne radioactivity is monitored inside the charging pumps areas. As shown in Figure 9.4.3-1 the merging in one duct of the A, B charging pump areas and the A, B annulus emergency exhaust filtration unit areas within the controlled area of the reactor building, the airflow in this duct is monitored by radiation monitor to determine if high levels of radioactivity are present. Under normal operating conditions, when high levels of radioactive material are not present, the airflow is routed through the normally open, air operated damper to the auxiliary building exhaust fans and then to the vent stack for release. Upon detection of high levels of radioactivity in this duct existing the controlled area of the reactor building, the normally closed, air operated damper is opened and the normally open damper is closed. The airflow in the duct is then routed to connect with the duct to the containment low volume purge exhaust filtration units, as shown on Figure 9.4.3-1, which will pass the radioactive exhaust air through a HEPA filter as well as through charcoal absorber filters. This filter arrangement will effectively remove the majority of radioactive materials from the exhaust air stream before it is sent to the vent stack for release. The vent stack also contains radiation monitors which are used during all modes of operation to provide assurance that the release of radioactive materials contained in gaseous effluents will not exceed the limits specified in 10 CFR 20. The arrangement shown in Figure 9.4.3-1, which allows the radiological controlled areas of the auxiliary building and reactor building to be filtered by the containment low volume purge exhaust filtration units, meets the GDC 60 requirements for normal plant operation based on compliance with RG 1.140.

To minimize the buildup of radioactive contamination within the ducts, the exhaust ducts are design/sized for the transport velocities needed to convey the radioactive contaminants without settling. Ducts for most nuclear exhaust and post-accident air

Following the detection of high levels of radioactivity by any of the four radiation monitors, alarms are indicated in the main control room and the containment isolation valves on the containment high volume purge system is automatically closed.

9.4.6.3 Safety Evaluation

9.4.6.3.1 Containment Fan Cooler System

The containment fan cooler system has no safety-related function and therefore does not require a safety evaluation. However, a part of ductwork in the containment serving the containment fan cooler system are supported in accordance with seismic category II requirements to remain in place during the SSE and preclude damage to any safety-related structures, systems, or components located in the vicinity of the piping or the ductwork. As a further safety feature of the containment ventilation system, the fan housing are designed to resist penetration of internally generated missiles in the event of a fan blade failure.

9.4.6.3.2 Control Rod Drive Mechanism Cooling System

The CRDM cooling system has no safety-related function and therefore requires no safety evaluation. However, a part of ductwork in the containment serving the CRDM cooling system are supported in accordance with seismic category II requirements so as to remain in place during the SSE and preclude damage to any safety-related structures, systems, or components located in the vicinity of the ductwork. As a further safety feature of the containment ventilation system, the fan housings are designed to resist penetration of internally generated missiles in the event of a fan wheel failure.

9.4.6.3.3 Reactor Cavity Cooling System

The reactor cavity cooling system has no safety-related function and therefore does not require a safety evaluation. However, a part of ductwork in the containment is supported in accordance with seismic category II requirements to remain in place during the SSE to preclude damage to any safety-related structures, systems, or components located in the vicinity of the ductwork. As a further safety feature of the containment ventilation system, the fan housings are designed to resist penetration of internally generated missiles in the event of a fan blade failure.

9.4.6.3.4 Containment Purge System

Other than the safety-related seismic category I containment isolation valves, the containment purge system has no safety-related function and therefore requires no safety evaluation. The containment isolation function of containment purge system is evaluated in Subsection 6.2.4. Failure mode and effects analysis Table 9.4.6-2 concludes that no single failure coincident with a LOOP compromises the system's safety functions.

Ductwork in the reactor building is supported in accordance with seismic Category II requirements to remain in place during an SSE to preclude damage to any safety-related structures, systems or components located in the vicinity of the ductwork. As a further safety feature of the containment purge ventilation system, the fan housings are designed

to resist penetration of internally generated missiles in the event of a fan wheel failure.

The containment low volume purge system's penetration is sized so that the calculated exposures for post-LOCA conditions do not exceed 10 CFR 50.34 limitations.

The containment high volume purge system containment isolation valves remain in the closed position during normal operation, since the purge operation is initiated only after plant shutdown and during refueling operations.

The containment isolation valves for the containment purge system will close within five seconds upon initiation of the containment purge isolation signal (Chapter 7, Section 7.3). Upon receipt of a containment low volume purge system low airflow alarm following closure of the containment isolation valves, the containment low volume purge air handling units and associated exhaust fans will be manually shut down.

9.4.6.4 Inspection and Testing Requirements

The containment ventilation system is designed to facilitate in-service inspections and on-line testing of components and controls in accordance with the following:

The system is provided with adequate instrumentation, temperature, flows, and differential pressure indicating devices to facilitate testing and verification of equipment heat transfer capability and flow blockage.

Preoperational testing of the system is performed as described in Chapter 14, Verification Programs, to verify that system is installed in accordance with applicable programs and specifications. All HVAC system airflows are balanced in conformance with the design flow, path flow capacity, and proper air mixing throughout the containment.

The system equipment and components are provided with proper access for initial and periodic inspection and maintenance during normal operation.

Air handling units are factory tested in accordance with the Air Movement and Control Association Standards (Ref.9.4.8-16, Ref.9.4.8-17, Ref.9.4.8-18). Air filters are tested in accordance with the American Society of Heating, Refrigerating and Air Conditioning Engineers Standards (Ref.9.4.8-19, Ref.9.4.8-20). Cooling coils are hydrostatically tested in accordance with ASME, Section VIII and their performance is rated in accordance with the Air Conditioning and Refrigeration Institute Standard (Ref.9.4.8-21, Ref.9.4.8-22, Ref.9.4.8-23).

System instruments are periodically calibrated and automatic controls are tested for activation at the design set points in conformance with the design sequence of operation at all system operating modes.

9.4.6.4.1 Containment Fan Cooler System

The general requirements of Subsection 9.4.6.4 apply.

9.4.6.4.2 Control Rod Drive Mechanism Cooling System

9.4.6.5.2 Control Rod Drive Mechanism Cooing System

The instrumentation serving the CRDM cooling system includes:

- Recorder of the CRDM inlet and outlet air temperature and high temperature alarm.
- Alarm on low airflow.
- Alarm on motor winding temperature.
- Sensor on cooling fan and corresponding alarm for high vibrations.

9.4.6.5.3 Reactor Cavity Cooling System

The instrumentation serving the reactor cavity cooling system includes:

- Alarm on low airflow.
- Recording of concrete temperature .
- Sensor on cooling fan corresponding alarm for high vibrations.

9.4.6.5.4 Containment Purge Systems

9.4.6.5.4.1 Containment Low Volume Purge System

The instrumentation serving the containment low volume purge system includes:

- Alarm on low airflow.
- Indication of differential pressure across the filters and differential pressure high alarm.
- Indication of the filtration unit charcoal adsorber outlet air temperature and high, high-high temperature alarm.
- Alarm high radiation for the containment purge air.
- Containment pressure monitoring with low and high alarm.

9.4.6.5.4.2 Containment High Volume Purge System

The instrumentation and controls serving the containment high volume purge system includes:

- Alarm on low airflow.

9.4.8-27 General Design Criteria for Nuclear Power Plants, NRC Regulation Title 10, Code of Federal Regulations, 10 CFR Part 50, Appendix A.

9.4.8-28 Seismic Design Classification, Regulatory Guide 1.29 Revision 4, March 2007.

Table 9.4.6-2 Containment Ventilation System Failure Modes and Effects Analysis (Sheet 1 of 2)

Item	Component	Safety Function	Failure Mode	Effect on System Operation	Failure Detection Method
1	Containment isolation valve VCS-AOV-304	Close to provide containment pressure boundary	Failure to close on demand	None: Redundant isolation valve VCS-AOV-305 closes to isolate containment penetration.	Valve position indication and alarm in MCR if valve position not consistent with control signal.
2	Containment isolation valve VCS-AOV-305	Close to provide containment pressure boundary	Failure to close on demand	None: Redundant isolation valve VCS-AOV-304 closes to isolate containment penetration.	Valve position indication and alarm in MCR if valve position not consistent with control signal.
3	Containment isolation valve VCS-AOV-306	Close to provide containment pressure boundary	Failure to close on demand	None: Redundant isolation valve VCS-AOV-307 closes to isolate containment penetration.	Valve position indication and alarm in MCR if valve position not consistent with control signal.
4	Containment isolation valve VCS-AOV-307	Close to provide containment pressure boundary	Failure to close on demand	None: Redundant isolation valve VCS-AOV-306 closes to isolate containment penetration.	Valve position indication and alarm in MCR if valve position not consistent with control signal.
5	Containment isolation valve VCS-AOV-354	Close to provide containment pressure boundary	Failure to close on demand	None: Redundant isolation valve VCS-AOV-355 closes to isolate containment penetration.	Valve position indication and alarm in MCR if valve position not consistent with control signal.

Table 9.4.6-2 Containment Ventilation System Failure Modes and Effects Analysis (Sheet 2 of 2)

Item	Component	Safety Function	Plant Condition	Effect on System Operation	Failure Detection Method
6	Containment isolation valve VCS-AOV-355	Close to provide containment pressure boundary	Failure to close on demand	None: Redundant isolation valve VCS-AOV-354 closes to isolate containment penetration.	Valve position indication and alarm in MCR if valve position not consistent with control signal.
7	Containment isolation valve VCS-AOV-356	Close to provide containment pressure boundary	Failure to close on demand	None: Redundant isolation valve VCS-AOV-357 closes to isolate containment penetration.	Valve position indication and alarm in MCR if valve position not consistent with control signal.
8	Containment isolation valve VCS-AOV-357	Close to provide containment pressure boundary	Failure to close on demand	None: Redundant isolation valve VCS-AOV-356 closes to isolate containment penetration.	Valve position indication and alarm in MCR if valve position not consistent with control signal.

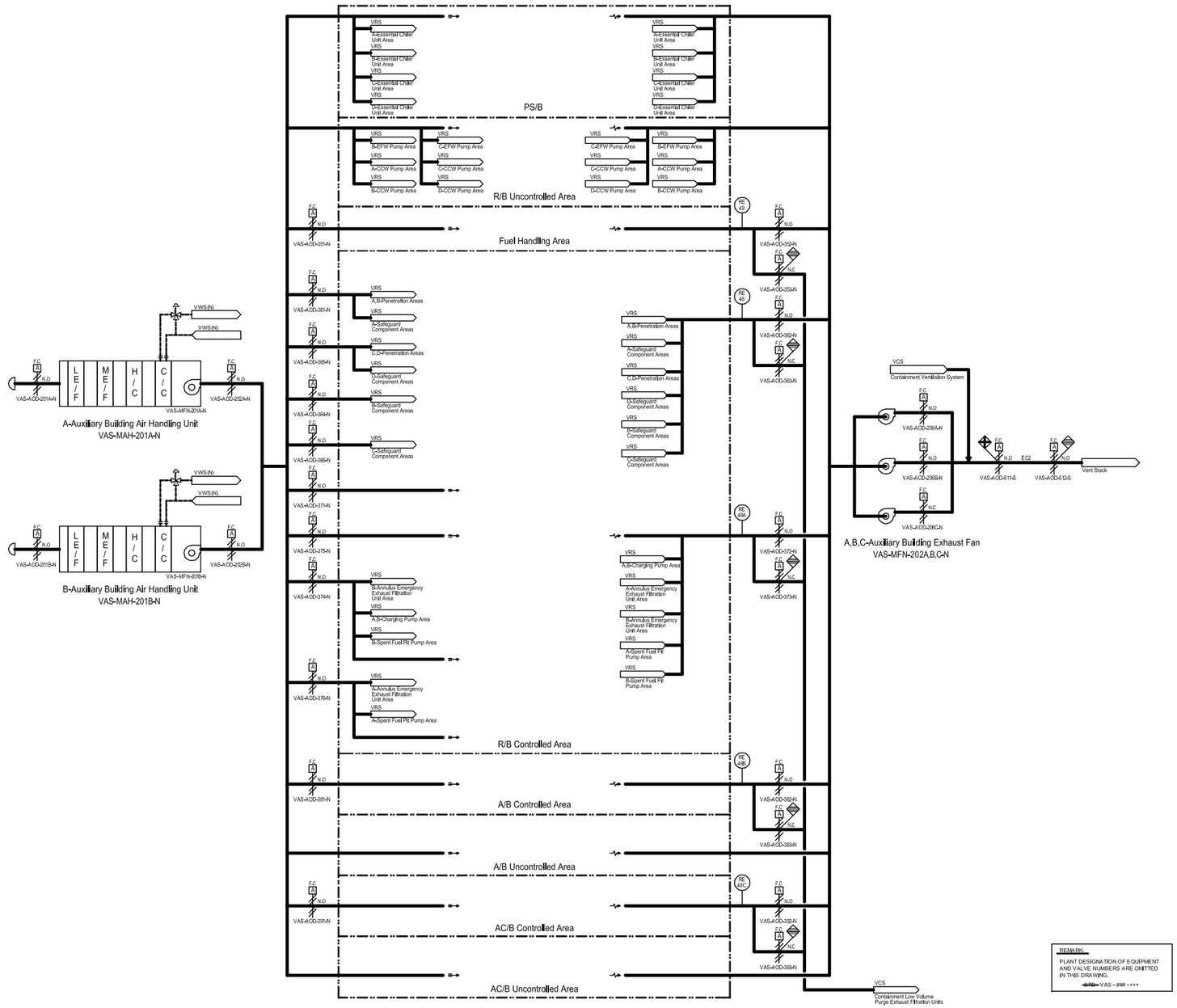

Figure 9.4.3-1 Auxiliary Building HVAC System Flow Diagram

When the GTG is operating, circulation is accomplished by the gas turbine shaft driven pumps, which draw oil from the reduction gear oil reservoir through a suction strainer, and passes it through a full-flow filter, a strainer, and air cooled lube oil cooler before distribution to the bearings. Requirement specification of lube~~fuel~~ oil consumption is 0.053 gal/h or less with rated load operation of the GT including consideration for increased lube oil consumption during design life with appropriate maintenance. The minimum lube oil inventory for seven days full-load operation is 81 gal.

During operation of the gas turbine, failure of the gas turbine shaft driven pumps and spurious open of pressure regulating valves results in unsatisfactorily low lube oil pressure. Receipt of a low lube oil pressure signal from the trip logic will shut down the GTG during routine operation. The low lube oil temperature shutdown signal is bypassed or defeated during accident conditions. During starting of the gas turbine, GTG does not need pre-circulation of lube oil, because ball bearings are ~~adopted~~used. GTG can start without circulation of lube oil until shaft driven pumps start.

Loss of cooling to the lube oil cooler would cause a high lube oil temperature condition and alarm. The ~~fail to open of temperature regulating valves~~ failure of the temperature regulating valves to open would also cause a high lube oil temperature condition. Receipt of a high lube oil temperature signal from the trip logic will shut down the GTG during routine operation. The high lube oil temperature shutdown signal is bypassed or defeated during accident conditions.

9.5.7.3 Safety Evaluation

A. The gas turbine shaft driven pumps provide oil to the gas turbine bearings during GTG operation. Oil is kept at a constant pressure and temperature by use of regulating valves and a lube oil cooler.

B. ~~The~~All components of the systems are provided in GTG enclosure as a GTG package ~~designed to ASME Boiler & Pressure Vessel Code, Section III, Class 3. When a component is commercially unavailable as ASME Boiler & Pressure Vessel Code, Section III, Class 3 design, the component is~~and proven of equivalent quality to ASME Boiler & Pressure Vessel Code, Section III, Class 3. Equivalent quality of a component is interpreted to mean an item designed for commercial use is upgraded to ASME Boiler & Pressure Vessel Code Section III, Class 3 requirements through seismic design, testing, qualification and documentation (Ref. 9.5.4-7).

C. The lubrication system is designed in accordance with seismic category I requirements as specified in Section 3.2. System, equipment, and components which are not normally required to be seismic category I based on their safety function, but whose failure could impair the functioning of the air starting system are upgraded in design to seismic category I.

D. The lubricating oil supply to each gas turbine is sized to provide gas turbine lubrication. The lubrication system for each generator is capable of supplying lube oil for an extended period without augmentation from other sources. The lube oil pump is driven by the gas turbine with which it is associated. Because of

Fire Zone No.	Designation	Fire Load (Btu/ft^2)
FA6-101-22	Security Room (FA6-101-22)	6.2E+02
FA6-101-23	Security Room (FA6-101-23)	6.2E+02

Fire Detection and Suppression Features

FA6-101-01, FA6-101-02, FA6-101-13, FA6-101-17 FA6-101-04 FA6-101-15 and FA6-101-16 are provided with manual fire alarm pull station. Primary fire suppression is provided from wet-pipe automatic sprinkler system. Secondary suppression is provided from manual fire hose station.

FA6-101-19 is provided with UV/IR flame detection, and manual fire alarm pull station is installed as secondary detection. Primary fire suppression is provided from manual fire hose station. Secondary suppression is provided from portable fire extinguishers.

FA6-101-03 and FA6-101-14 are provided with automatic smoke detection, and manual fire alarm pull station is installed as secondary detection. Primary fire suppression is provided from preaction sprinkler.

Other fire zones are provided with manual fire alarm pull station. Primary fire suppression is provided from manual fire hose stations. Secondary suppression is provided from portable fire extinguishers.

Smoke Control Features

~~The T/B is provides with automatic opening smoke vents in the building roof.~~ The turbine building area ventilation system is manually actuated to purge the area of smoke. Supplementary smoke removal can be accomplished by the plant fire brigade using portable fans, ~~and~~ ducting and standard fire fighting techniques. Except for isolated rooms, smoke accumulation is not expected to be a problem due to the tremendous internal volume of the building.

Fire Protection Adequacy Evaluation

The overall fire loading within the T/B is low. Special hazards are protected and a general area fire sprinkler system that is provided for all floor level below the turbine deck will actuate to suppress the a turbine lube oil fire. The structural wall between the T/B and the adjacent R/B is of substantial reinforced concrete construction which provides a fire resistance in excess of a 3-hour ASTM E-119 fire exposure.

Fire Protection System Integrity

The fire protection capability for this area is provided from an automatic sprinkler system and manual hose streams applied by the plant fire brigade. The sprinkler system is designed to code (NFPA 13) the standpipe is designed to code (NFPA 14), and the fire main is designed to code (NFPA 24). These systems have high integrity to guard against inadvertent discharge. Should the fire suppression system discharge, no safety-related

Table 9A-2 Fire Hazard Analysis Summary (Sheet 201 of 293)

Fire Zone:	**FA3-103-01**
Building:	**Power Source**
Floor(s):	**B1F, B1MF**
Fig:	**9A-11**
Sect:	**3.72**
Area Designation:	**B-Class 1E GTG Room**
Zone Designation:	**B-GTG Auxiliary Component Room**
Associated Safety Division(s)	**B**
Applicable Regulatory and Code Ref(s):	**IBC, RG 1.189; NFPA 10, 14, 72 and 804**

Adjacent Fire Zones:
(Primary Inter face Listed See Table 9A-3 For Complete Listing)

Wall	Wall	Ceiling
FA3-102-01 **FA3-103-02** **FA3-104-01** **FA3-106-01**	**FA3-118-01**	**FA3-103-03** **FA3-104-03** **FA3-118-01**

Fire Barrier Description:

Reinforced concrete walls providing in excess of 3-hour fire resistive capability. Three hour fire rated door to area and all openings and penetrations to fire area are protected to 3-hour fire resistance. ~~This zone has unprotected openings with spatial separation to mitigate fire spread with adjacent zones in this fire area.~~ This zone has unprotected openings with adjacent zone (FA3-103-02) in this fire area.

Potential Combustibles	
Item	Heat Release (Btu)
Lube Oil	**4.0E+05**

Fire Detection - Primary	Fire Detection - Backup
Automatic smoke	**Manual Fire Alarm Pull Station**
Fire Suppression - Primary	**Fire Suppression - Backup**
Fire Hose Station	**Portable Fire Extinguisher**

Fire Zone Combustible Summary	
	Btu/ft^2
Anticipated Combustible Loading:	**6.1E+02**
Maximum Anticipated Combustible Loading:	**8.8E+02**

Floor Area (ft^2)
650

Fire Impact to Zone	
Suppression System Operates	Suppression System Fails to Op.
A quickly detected and suppressed fire in this room will minimize fire damage to the safety-related equipment consistent with GDC-3. A fire will be confined within the	**A fire has the potential to damage the safe-shutdown functions associated with safety train B. Train A, C and D remain free from the damage to achieve safe-shutdown.**

	fire zone due to the low fire loading.

Table 9A-2 Fire Hazard Analysis Summary (Sheet 202 of 293)

Fire Zone:	**FA3-103-02**
Building:	**Power Source**
Floor(s):	**B1MF**
Fig:	**9A-11**
Sect:	**3.72**
Area Designation:	**B-Class 1E GTG Room**
Zone Designation:	**B-GTG Fuel Piping Area**
Associated Safety Division(s)	**B**

Applicable Regulatory and Code Ref(s):
IBC, RG 1.189; NFPA 10, 14, 72 and 804

Adjacent Fire Zones:
(Primary Inter face Listed See Table 9A-3 For Complete Listing)

Wall	Floor	Ceiling
FA3-102-01 **FA3-103-01** **FA3-104-02** **FA3-119-01**	**FA3-104-01** **See Table 9A-3**	**FA3-104-03**

Fire Barrier Description:
Reinforced concrete walls providing in excess of 3-hour fire resistive capability. Three hour fire rated door to area and all openings and penetrations to fire area are protected to 3-hour fire resistance. ~~This zone has unprotected openings with spatial separation to mitigate fire spread with adjacent zones in this fire area.~~ This zone has unprotected openings with adjacent zone (FA3-103-01) in this fire area.

Potential Combustibles	
Item	Heat Release (Btu)
Transient Only	**9.3E+04**

Fire Detection - Primary	Fire Detection - Backup
Automatic smoke	**Manual Fire Alarm Pull Station**
Fire Suppression - Primary	**Fire Suppression - Backup**
Fire Hose Station	**Portable Fire Extinguisher**

Fire Zone Combustible Summary	
	Btu/ft^2
Anticipated Combustible Loading:	**nil**

Floor Area (ft^2)

Fire Impact to Zone	
Suppression System Operates	Suppression System Fails to Op.
A quickly detected and suppressed fire in this room will minimize fire damage to the safety-related equipment consistent with GDC-3.	**A fire has the potential to damage the safe-shutdown functions associated with safety train B. Train A, C and D remain free from the damage to achieve safe-**

Maximum Anticipated Combustible Loading:	**3.7E+02**		**250**	**A fire will be confined within the fire zone due to the low fire loading.**	**shutdown.**

Table 9A-2 Fire Hazard Analysis Summary (Sheet 204 of 293)

Fire Zone:	**FA3-104-01**
Building:	**Power Source**
Floor(s):	**B1F, B1MF**
Fig:	**9A-11**
Sect:	**3.73**
Area Designation:	**A-Class 1E GTG Room**
Zone Designation:	**A-GTG Auxiliary Component Room**
Associated Safety Division(s)	**A**

Applicable Regulatory and Code Ref(s):
IBC, RG 1.189; NFPA 10, 14, 72 and 804

Adjacent Fire Zones:
(Primary Inter face Listed See Table 9A-3 For Complete Listing)

Wall	Floor	Ceiling
FA3-102-01 **FA3-103-01** **FA3-106-01**	**-**	**FA3-103-02** **FA3-104-02** **FA3-119-01**

Fire Barrier Description:
Reinforced concrete walls providing in excess of 3-hour fire resistive capability. Three hour fire rated door to area and all openings and penetrations to fire area are protected to 3-hour fire resistance. ~~This zone has unprotected openings with spatial separation to mitigate fire spread with adjacent zones in this fire area.~~ This zone has unprotected openings with adjacent zone (FA3-104-02) in this fire area.

Potential Combustibles	
Item	Heat Release (Btu)
Lube Oil	**4.0E+05**

Fire Detection - Primary	Fire Detection - Backup
Automatic smoke	**Manual Fire Alarm Pull Station**
Fire Suppression - Primary	**Fire Suppression - Backup**
Fire Hose Station	**Portable Fire Extinguisher**

Fire Impact to Zone	
Suppression System Operates	Suppression System Fails to Op.
A quickly detected and suppressed fire in this room will minimize fire damage to the safety-related equipment consistent with GDC-3.	**A fire has the potential to damage the safe-shutdown functions associated with safety train A. Train B, C and D remain free from the damage to achieve safe-shutdown.**

Fire Zone Combustible Summary	
	Btu/ft^2
Anticipated Combustible Loading:	**6.1E+02**

Floor Area (ft^2)

Maximum Anticipated Combustible Loading:	**8.8E+02**		**650**	**A fire will be confined within the fire zone due to the low fire loading.**	

Table 9A-2 Fire Hazard Analysis Summary (Sheet 205 of 293)

Fire Zone:	**FA3-104-02**
Building:	**Power Source**
Floor(s):	**B1F**
Fig:	**9A-11**
Sect:	**3.73**
Area Designation:	**A-Class 1E GTG Room**
Zone Designation:	**A-GTG Fuel Piping Area**
Associated Safety Division(s)	**A**

Applicable Regulatory and Code Ref(s):
IBC, RG 1.189; NFPA 10, 14, 72 and 804

Adjacent Fire Zones:
(Primary Inter face Listed See Table 9A-3 For Complete Listing)

Wall	Floor	Ceiling
FA3-103-02 **FA3-105-01** **FA3-119-01** **FA7-401-01**	**FA3-104-01**	**FA3-104-03**

Fire Barrier Description:
Reinforced concrete walls providing in excess of 3-hour fire resistive capability. Three hour fire rated door to area and all openings and penetrations to fire area are protected to 3-hour fire resistance. ~~This zone has unprotected openings with spatial separation to mitigate fire spread with adjacent zones in this fire area.~~ This zone has unprotected openings with adjacent zone (FA3-104-01) in this fire area.

Potential Combustibles	
Item	Heat Release (Btu)
Transient Only	**9.3E+04**

Fire Detection - Primary	Fire Detection - Backup
Automatic smoke	**Manual Fire Alarm Pull Station**
Fire Suppression - Primary	**Fire Suppression - Backup**
Fire Hose Station	**Portable Fire Extinguisher**

Fire Zone Combustible Summary	
	Btu/ft^2
Anticipated Combustible Loading:	**nil**
Maximum Anticipated Combustible Loading:	**9.3E+02**

Floor Area (ft^2)
100

Fire Impact to Zone	
Suppression System Operates	Suppression System Fails to Op.
A quickly detected and suppressed fire in this room will minimize fire damage to the safety-related equipment consistent with GDC-3. **A fire will be confined within the**	**A fire has the potential to damage the safe-shutdown functions associated with safety train A. Train B, C and D remain free from the damage to achieve safe-shutdown.**

	fire zone due to the low fire loading.

Table 9A-2 Fire Hazard Analysis Summary (Sheet 212 of 293)

Fire Zone:	**FA3-109-01**
Building:	**Power Source**
Floor(s):	**B1F, B1MF**
Fig:	**9A-11**
Sect:	**3.78**
Area Designation:	**C-Class 1E GTG Room**
Zone Designation:	**C-GTG Auxiliary Component Room**
Associated Safety Division(s)	**C**

Applicable Regulatory and Code Ref(s):
IBC, RG 1.189; NFPA 10, 14, 72 and 804

Adjacent Fire Zones:
(Primary Inter face Listed See Table 9A-3 For Complete Listing)

Wall	Wall	Ceiling
FA3-108-01 **FA3-109-02** **FA3-111-01** **FA3-112-01**	**FA3-122-01**	**FA3-109-03** **FA3-111-03** **FA3-122-01**

Fire Barrier Description:
Reinforced concrete walls providing in excess of 3-hour fire resistive capability. Three hour fire rated door to area and all openings and penetrations to fire area are protected to 3-hour fire resistance. ~~This zone has unprotected openings with spatial separation to mitigate fire spread with adjacent zones in this fire area.~~ This zone has unprotected openings with adjacent zone (FA3-109-02) in this fire area.

Potential Combustibles	
Item	Heat Release (Btu)
Lube Oil	**4.0E+05**

Fire Detection - Primary	Fire Detection - Backup
Automatic smoke	**Manual Fire Alarm Pull Station**
Fire Suppression - Primary	**Fire Suppression - Backup**
Fire Hose Station	**Portable Fire Extinguisher**

Fire Impact to Zone	
Suppression System Operates	Suppression System Fails to Op.
A quickly detected and suppressed fire in this room will minimize fire damage to the safety-related equipment consistent with GDC-3.	**A fire has the potential to damage the safe-shutdown functions associated with safety train C. Train A, B and D remain free from the damage to achieve safe-**

Fire Zone Combustible Summary	
	Btu/ft^2
Anticipated Combustible Loading:	**6.1E+02**

Floor Area (ft^2)

Maximum Anticipated Combustible Loading:	**8.8E+02**	**650**	**A fire will be confined within the fire zone due to the low fire loading.**	**shutdown.**

Table 9A-2 Fire Hazard Analysis Summary (Sheet 213 of 293)

Fire Zone: **FA3-109-02**

Building:	**Power Source**
Floor(s):	**B1MF**
Fig:	**9A-11**
Sect:	**3.78**

Area Designation:	**C-Class 1E GTG Room**
Zone Designation:	**C-GTG Fuel Piping Area**
Associated Safety Division(s)	**C**

Applicable Regulatory and Code Ref(s):
IBC, RG 1.189; NFPA 10, 14, 72 and 804

Adjacent Fire Zones:
(Primary Inter face Listed See Table 9A-3 For Complete Listing)

Wall	Floor	Ceiling
FA3-108-01 **FA3-109-01** **FA3-111-02** **FA3-124-01**	**FA3-111-01** **See Table 9A-3**	**FA3-113-03**

Fire Barrier Description:
Reinforced concrete walls providing in excess of 3-hour fire resistive capability. Three hour fire rated door to area and all openings and penetrations to fire area are protected to 3-hour fire resistance. ~~This zone has unprotected openings with spatial separation to mitigate fire spread with adjacent zones in this fire area.~~ This zone has unprotected openings with adjacent zone (FA3-109-01) in this fire area.

Potential Combustibles	
Item	Heat Release (Btu)
Transient Only	**9.3E+04**

Fire Detection - Primary	Fire Detection - Backup
Automatic smoke	**Manual Fire Alarm Pull Station**
Fire Suppression - Primary	**Fire Suppression - Backup**
Fire Hose Station	**Portable Fire Extinguisher**

Fire Zone Combustible Summary	
	Btu/ft^2
Anticipated Combustible Loading:	**nil**
Maximum Anticipated Combustible Loading:	**2.7E+02**

Floor Area (ft^2)
350

Fire Impact to Zone	
Suppression System Operates	Suppression System Fails to Op.
A quickly detected and suppressed fire in this room will minimize fire damage to the safety-related equipment consistent with GDC-3. A fire will be confined within the	**A fire has the potential to damage the safe-shutdown functions associated with safety train C. Train A, B and D remain free from the damage to achieve safe-shutdown.**

	fire zone due to the low fire loading.

Table 9A-2 Fire Hazard Analysis Summary (Sheet 216 of 293)

Fire Zone:	**FA3-111-01**
Building:	**Power Source**
Floor(s):	**B1F, B1MF**
Fig:	**9A-11**
Sect:	**3.80**
Area Designation:	**D-Class 1E GTG Room**
Zone Designation:	**D-GTG Auxiliary Component Room**
Associated Safety Division(s)	**D**

Applicable Regulatory and Code Ref(s):
IBC, RG 1.189; NFPA 10, 14, 72 and 804

Adjacent Fire Zones:
(Primary Inter face Listed See Table 9A-3 For Complete Listing)

Wall	Floor	Ceiling
FA3-108-01 **FA3-109-01** **FA3-112-01**	**-**	**FA3-109-02** **FA3-111-02** **FA3-124-01**

Fire Barrier Description:
Reinforced concrete walls providing in excess of 3-hour fire resistive capability. Three hour fire rated door to area and all openings and penetrations to fire area are protected to 3-hour fire resistance. This zone has unprotected openings with adjacent zone (FA3-111-02) in this fire area.~~This zone has unprotected openings with spatial separation to mitigate fire spread with adjacent zones in this fire area.~~

Potential Combustibles	
Item	Heat Release (Btu)
Lube Oil	**4.0E+05**

Fire Detection - Primary	Fire Detection - Backup
Automatic smoke	**Manual Fire Alarm Pull Station**
Fire Suppression - Primary	**Fire Suppression - Backup**
Fire Hose Station	**Portable Fire Extinguisher**

Fire Zone Combustible Summary	
	Btu/ft^2
Anticipated Combustible Loading:	**6.1E+02**
Maximum Anticipated Combustible Loading:	**8.8E+02**

Floor Area (ft^2)
650

Fire Impact to Zone	
Suppression System Operates	Suppression System Fails to Op.
A quickly detected and suppressed fire in this room will minimize fire damage to the safety-related equipment consistent with GDC-3. **A fire will be confined within the**	**A fire has the potential to damage safe-shutdown functions associated with safety train D. Train A, B and C remain free from the damage.**

	fire zone due to the low fire loading.

Table 9A-2 Fire Hazard Analysis Summary (Sheet 217 of 293)

Fire Zone:	**FA3-111-02**
Building:	**Power Source**
Floor(s):	**B1F**
Fig:	**9A-11**
Sect:	**3.80**
Area Designation:	**D-Class 1E GTG Room**
Zone Designation:	**D-GTG Fuel Piping Area**
Associated Safety Division(s)	**D**

Applicable Regulatory and Code Ref(s):
IBC, RG 1.189; NFPA 10, 14, 72 and 804

Adjacent Fire Zones:
(Primary Inter face Listed See Table 9A-3 For Complete Listing)

Wall	Floor	Ceiling
FA3-109-02 **FA3-113-01** **FA3-124-01** **FA7-405-01**	**FA3-111-01**	**FA3-113-03**

Fire Barrier Description:
Reinforced concrete walls providing in excess of 3-hour fire resistive capability. Three hour fire rated door to area and all openings and penetrations to fire area are protected to 3-hour fire resistance. This zone has unprotected openings with adjacent zone (FA3-111-01) in this fire area.~~This zone has unprotected openings with spatial separation to mitigate fire spread with adjacent zones in this fire area.~~

Potential Combustibles	
Item	Heat Release (Btu)
Transient Only	**9.3E+04**

Fire Detection - Primary	Fire Detection - Backup
Automatic smoke	**Manual Fire Alarm Pull Station**
Fire Suppression - Primary	**Fire Suppression - Backup**
Fire Hose Station	**Portable Fire Extinguisher**

Fire Zone Combustible Summary	
	Btu/ft^2
Anticipated Combustible Loading:	**nil**
Maximum Anticipated Combustible Loading:	**1.9E+03**

Floor Area (ft^2)
50

Fire Impact to Zone	
Suppression System Operates	Suppression System Fails to Op.
A quickly detected and suppressed fire in this room will minimize fire damage to the safety-related equipment consistent with GDC-3. **A fire will be confined within the**	**A fire has the potential to damage safe-shutdown functions associated with safety train D. Train A, B and C remain free from the damage.**

	fire zone due to the low fire loading.

Table 9A-2 Fire Hazard Analysis Summary (Sheet 288 of 293)

Fire Zone:	**FA7-401-01**
Building:	**O/B**
Floor(s):	
Fig:	**9A-27**
Sect:	**3.97**

Area Designation:	**Power Source Fuel Storage Vault**
Zone Designation:	**A-Class 1E GTG Power Source Fuel Storage Vault**
Associated Safety Division(s)	**A**

Applicable Regulatory and Code Ref(s):
IBC, RG 1.189; NFPA 10, 13, 14, 30, 72 and 804

Adjacent Fire Zones:
(Primary Inter face Listed See Table 9A-3 For Complete Listing)

Wall	Wall	Floor & Ceiling
FA3-103-02 **FA3-104-02** **FA7-102-01** **FA7-103-01**	**FA7-402-01** **FA7-403-01**	~~**FA7-103-01**~~ ~~**FA7-104-01**~~

Fire Barrier Description:
Walls of reinforced concrete or other material providing a minimum 3-hour fire resistance rating form the boundaries of this room. The door to the room is 3-hour fire rated and all openings and penetrations into the room are rated to provide 3-hour fire resistance.

Potential Combustibles	
Item	Heat Release (Btu)
Fuel oil-	**1.7 E + 10-**

Fire Detection - Primary	Fire Detection - Backup
~~**Automatic Heat Detection**~~**Vapor and Liquid Detection**	**Manual Fire Alarm Pull Station located in the tunnel from the PS/B.**
Fire Suppression - Primary	**Fire Suppression - Backup**
~~**Wet**~~ **Dry-Pipe Sprinkler**	**Manual Hose Station located in the tunnel from the PS/B.** **Portable fire extinguishers located as appropriate for hazards and work activities during maintenance outage.**

Fire Zone Combustible Summary	
	Btu/ft^2
Anticipated Combustible Loading:	**-9.2 E + 06**
Maximum Anticipated Combustible Loading:	**-**

Floor Area (ft^2)
1850

Fire Impact to Zone	
Suppression System Operates	Suppression System Fails to Op.
~~**A quickly detected and**~~ **The dry-pipe sprinkler system will suppress~~ed~~ the fire in this room and will minimize fire damage to the safety-related equipment consistent with GDC-3.**	**A fire has the potential to damage the safe-shutdown functions associated with safety train A. Train B, C and D remain free from the damage to achieve safe-shutdown.**

Table 9A-2 Fire Hazard Analysis Summary (Sheet 289 of 293)

Fire Zone:	FA7-402-01
Building:	O/B
Floor(s):	
Fig:	9A-27
Sect:	3.97
Area Designation:	Power Source Fuel Storage Vault
Zone Designation:	B-Class 1E GTG Power Source Fuel Storage Vault
Associated Safety Division(s)	B

Applicable Regulatory and Code Ref(s):
IBC, RG 1.189; NFPA 10, 13,14,30,72 and 804

Adjacent Fire Zones: (Primary Inter face Listed See Table 9A-3 For Complete Listing)

Wall	Floor	Floor & Ceiling
FA3-103-02 FA7-102-01 FA7-103-01 FA7-401-01	FA7-103-01 FA7-104-01	-

Fire Barrier Description:
Walls of reinforced concrete or other material providing a minimum 3-hour fire resistance rating form the boundaries of this room. The door to the room is 3-hour fire rated and all openings and penetrations into the room are rated to provide 3-hour fire resistance.

Potential Combustibles	
Item	Heat Release (Btu)
-Fuel oil	1.7E + 10-

Fire Detection - Primary	Fire Detection - Backup
~~Automatic Heat Detection~~Vapor and Liquid Detection	Manual Fire Alarm Pull Station located in the tunnel from the PS/B.
Fire Suppression - Primary	**Fire Suppression - Backup**
~~Wet~~Dry--Pipe Sprinkler	Manual Hose Station located in the tunnel from the PS/B. Portable fire extinguishers located as appropriate for hazards and work activities during maintenance outages.

Fire Zone Combustible Summary	
	Btu/ft^2
Anticipated Combustible Loading:	9.2E + 06-
Maximum Anticipated Combustible Loading:	-

Floor Area (ft^2)
1850

Fire Impact to Zone	
Suppression System Operates	Suppression System Fails to Op.
~~A quickly detected and~~The dry-pipe sprinkler system will suppress~~ed~~ the fire in this room and will minimize fire damage to the safety-related equipment consistent with GDC-3.	A fire has the potential to damage the safe-shutdown functions associated with safety train B. Train A, C and D remain free from the damage to achieve safe-shutdown.

Table 9A-2 Fire Hazard Analysis Summary (Sheet 290 of 293)

Fire Zone:	FA7-403-01
Building:	O/B
Floor(s):	
Fig:	9A-27
Sect:	3.97
Area Designation:	Power Source Fuel Storage Vault
Zone Designation:	A-AAC GTG Power Source Fuel Storage Vault
Associated Safety Division(s)	N

Applicable Regulatory and Code Ref(s):
IBC, RG 1.189; NFPA 10, 13,14,30,72 and 804

Adjacent Fire Zones:
(Primary Inter face Listed See Table 9A-3 For Complete Listing)

Wall	Floor	Floor & Ceiling
FA3-105-03 FA7-102-01 FA7-103-01 FA7-401-01	FA7-103-01 FA7-104-01	-

Fire Barrier Description:
Walls of reinforced concrete or other material providing a minimum 3-hour fire resistance rating form the boundaries of this room. The door to the room is 3-hour fire rated and all openings and penetrations into the room are rated to provide 3-hour fire resistance.

Potential Combustibles	
Item	Heat Release (Btu)
-Fuel oil	-1.7E + 10

Fire Detection - Primary	Fire Detection - Backup
~~Automatic Heat Detection~~Vapor and Liquid Detection	Manual Fire Alarm Pull Station located in the tunnel from the PS/B.
Fire Suppression - Primary	**Fire Suppression - Backup**
~~Wet~~Dry-~~-~~Pipe Sprinkler	Manual Hose Station located in the tunnel from the PS/B. Portable fire extinguishers located as appropriate for hazards and work activities during maintenance outages.

Fire Zone Combustible Summary	
	Btu/ft^2
Anticipated Combustible Loading:	9.2E + 06-
Maximum Anticipated Combustible Loading:	-

Floor Area (ft^2)
1850

Fire Impact to Zone	
Suppression System Operates	Suppression System Fails to Op.
~~A quickly detected and~~The dry-pipe sprinkler system will suppress~~ed~~ the fire in this room and will minimize fire damage to the safety-related equipment consistent with GDC-3.	There is no safe-shutdown circuit in this zone to be damaged.

Table 9A-2 Fire Hazard Analysis Summary (Sheet 291 of 293)

Fire Zone:	**FA7-404-01**
Building:	**O/B**
Floor(s):	
Fig:	**9A-27**
Sect:	**3.97**

Area Designation:	**Power Source Fuel Storage Vault**
Zone Designation:	**C-Class 1E GTG Power Source Fuel Storage Vault**
Associated Safety Division(s)	**C**

Applicable Regulatory and Code Ref(s):
IBC, RG 1.189; NFPA 10, 13,14,30,72 and 804

Adjacent Fire Zones: (Primary Inter face Listed See Table 9A-3 For Complete Listing)	Wall	Wall	Floor & Ceiling
	FA3-109-02 **FA7-102-01** **FA7-103-01** **FA7-405-01**	**FA7-103-01** **FA7-104-01**	**-**

Fire Barrier Description:
Walls of reinforced concrete or other material providing a minimum 3-hour fire resistance rating form the boundaries of this room. The door to the room is 3-hour fire rated and all openings and penetrations into the room are rated to provide 3-hour fire resistance.

Potential Combustibles	
Item	Heat Release (Btu)
-Fuel oil	**-1.7E + 10**

Fire Detection - Primary	Fire Detection - Backup
~~Automatic Heat Detection~~Vapor and Liquid Detection	**Manual Fire Alarm Pull Station located in the tunnel from the PS/B.**
Fire Suppression - Primary	**Fire Suppression - Backup**
~~Wet~~Dry~~-~~-Pipe Sprinkler	**Manual Hose Station located in the tunnel from the PS/B.** **Portable fire extinguishers located as appropriate for hazards and work activities during maintenance outages.**

Fire Zone Combustible Summary	
	Btu/ft^2
Anticipated Combustible Loading:	**-9.2E + 06**
Maximum Anticipated Combustible Loading:	**-**

Floor Area (ft^2)
1850

Fire Impact to Zone	
Suppression System Operates	Suppression System Fails to Op.
~~A quickly detected and~~The dry-pipe sprinker system will suppress~~ed~~ the fire in this room and will minimize fire damage to the safety-related equipment consistent with GDC-3.	**A fire has the potential to damage the safe-shutdown functions associated with safety train C. Train A, B and D remain free from the damage to achieve safe-shutdown.**

Table 9A-2 Fire Hazard Analysis Summary (Sheet 292 of 293)

Fire Zone:	FA7-405-01
Building:	O/B
Floor(s):	
Fig:	9A-27
Sect:	3.97
Area Designation:	Power Source Fuel Storage Vault
Zone Designation:	D-Class 1E GTG Power Source Fuel Storage Vault
Associated Safety Division(s)	D

Applicable Regulatory and Code Ref(s):
IBC, RG 1.189; NFPA 10,13,14,30, 72 and 804

Adjacent Fire Zones: (Primary Inter face Listed See Table 9A-3 For Complete Listing)	Wall	Wall	Floor & Ceiling
	FA3-111-02 FA7-102-01 FA7-103-01 FA7-404-01 FA7-406-01	FA7-103-01 FA7-104-01	-

Fire Barrier Description:
Walls of reinforced concrete or other material providing a minimum 3-hour fire resistance rating form the boundaries of this room. The door to the room is 3-hour fire rated and all openings and penetrations into the room are rated to provide 3-hour fire resistance.

Potential Combustibles	
Item	Heat Release (Btu)
-Fuel oil	-1.7E + 10

Fire Detection — Primary	Fire Detection — Backup
~~Automatic Heat Detection~~Vapor and Liquid Detection	Manual Fire Alarm Pull Station located in the tunnel from the PS/B.
Fire Suppression - Primary	**Fire Suppression - Backup**
~~Wet~~Dry-~~-~~Pipe Sprinkler	Manual Hose Station located in the tunnel from the PS/B. Portable fire extinguishers located as appropriate for hazards and work activities during maintenance outages.

Fire Zone Combustible Summary	
	Btu/ft^2
Anticipated Combustible Loading:	9.2E + 06-
Maximum Anticipated Combustible Loading:	-

Floor Area (ft^2)
1850

Fire Impact to Zone	
Suppression System Operates	Suppression System Fails to Op.
~~A quickly detected and~~The dry-pipe sprinkler system will suppress~~ed~~ the fire in this room and will minimize fire damage to the safety-related equipment consistent with GDC-3.	A fire has the potential to damage the safe-shutdown functions associated with safety train D. Train A, B and C remain free from the damage to achieve safe-shutdown.

Table 9A-2 Fire Hazard Analysis Summary (Sheet 293 of 293)

Fire Zone:	**FA7-406-01**
Building:	**O/B**
Floor(s):	
Fig:	**9A-27**
Sect:	**3.97**

Area Designation:	**Power Source Fuel Storage Vault**
Zone Designation:	**B-AAC GTG Power Source Fuel Storage Vault**
Associated Safety Division(s)	**N**

Applicable Regulatory and Code Ref(s):
IBC, RG 1.189; NFPA 10,13,14,30, 72 and 804

Adjacent Fire Zones:
(Primary Inter face Listed See Table 9A-3 For Complete Listing)

Wall	Wall	Floor & Ceiling
FA3-113-03 **FA7-102-01** **FA7-103-01** **FA7-405-01**	**FA7-103-01** **FA7-104-01**	**-**

Fire Barrier Description:
Walls of reinforced concrete or other material providing a minimum 3-hour fire resistance rating form the boundaries of this room. The door to the room is 3-hour fire rated and all openings and penetrations into the room are rated to provide 3-hour fire resistance.

Potential Combustibles	
Item	Heat Release (Btu)
-Fuel oil	**-1.7E + 10**

Fire Detection - Primary	Fire Detection - Backup
~~Automatic Heat Detection~~Vapor and Liquid Detection	**Manual Fire Alarm Pull Station located in the tunnel from the PS/B.**
Fire Suppression - Primary	**Fire Suppression - Backup**
~~Wet~~Dry~~-~~-Pipe Sprinkler	**Manual Hose Station located in the tunnel from the PS/B.** **Portable fire extinguishers located as appropriate for hazards and work actibities during maintenance outages.**

Fire Zone Combustible Summary	
	Btu/ft^2
Anticipated Combustible Loading:	**9.2E + 06-**
Maximum Anticipated Combustible Loading:	**-**

Floor Area (ft^2)
1850

Fire Impact to Zone	
Suppression System Operates	Suppression System Fails to Op.
~~A quickly detected and~~ The dry-pipe sprinkler system will suppress~~ed~~ the fire in this room and will minimize fire damage to the safety-related equipment consistent with GDC-3.	**There is no safe-shutdown circuit in this zone to be damaged.**

Chapter 10

US-APWR DCD Chapter 10 Rev. 2, Tracking Report Rev. 3 Change List

Page	Location (e.g., subsection with paragraph/sentence/ Item, table with column/row, or figure)	Description of Change
10.4-80	Subsection 10.4.9.1 The last bullet	RAI No.544-4267,Question No.06.01.01-14 Inserted the following bullet. "The recommendations of RGs 1.36 and 1.37 are applied during fabrication of the EFWS and preheat guidelines in ASME Code Section III, Appendix D, Article D-1000 for carbon steel are applied to the EFS component."
10.4-103,104	Subsection 10.4.9 Table 10.4.9-7	RAI No.544-4267,Question No.06.01.01-14 Replaced the Table 10.4.9-7.

- The EFWS is designed such that in the unlikely event that the main control room (MCR) must be evacuated, the EFWS can be operated from the Remote Shutdown Console.

- The EFWS design meets the recommendations identified in NUREG-0611 (Reference 10.4-14).

- The EFWS design meets the provisions of TMI Action Plan Item II.E.1.2 of NUREG-0737 (Reference 10.4-13) regarding the automatic and manual initiation of the system, and 10 CFR 50.62(c)(1) (Reference 10.4-15) regarding the automatic initiation of the system on conditions indicative of an ATWS.

- The EFWS has the capability to permit operation at hot standby for 8 hours followed by 6 hours of cooldown to the RHR cut-in temperature from the MCR using only safety related equipment with a single active failure. The EFWS is designed with two EFW pits, both pits together providing a sufficient volume of water required for the emergency condition.

- The EFWS is designed with sufficient diversity to remain operable for a limited duration with neither offsite nor onsite ac power available. Turbine-driven pumps are designed to be available for SBO condition. Refer to Section 8.4 for the plant design to meet station blackout (SBO) requirements.

- Technical Specifications provide Limiting Condition for Operation and the surveillance testing requirements for EFWS to ensure continued system reliability during plant operation. See Chapter 16 for details.

- The EFWS is designed and constructed in accordance with ASME Code, Section III (Reference 10.4-8), Class 3 requirements up to the motor-operated EFW isolation valves (containment isolation valves). The containment isolation valves and the downstream piping to the feedwater system are safety class 2.

- The EFW pump main steam line steam isolation valves (containment isolation calve) in the steam supply lines and the steam piping upstream of the containment isolation valves are ASME Code, Section III (Reference 10.4-8), Class 2. The steam supply lines to the EFW pump turbine from steam lines downstream of the containment isolation valves are designed and constructed in accordance with ASME Code, Section III (Reference 10.4-8), Class 3 requirements.

- The safety classifications are shown in the EFWS flow diagram shown in Figures 10.4.9-1 and 10.4.9-2. Codes and standards applicable to the EFWS and components are listed in Table 3.2-2.

- The principle emergency feedwater system materials are shown in Table 10.4.9-7.

- The recommendations of RGs 1.36 and 1.37 are applied during fabrication of the EFWS and preheat guidelines in ASME Code Section III, Appendix D, Article D-1000 for carbon steel are applied to the EFS component.

Table 10.4.9-7 Principle Emergency Feedwater System Materials

ESF Component	Material	Class, Grade or Type
Emergency Feedwater Pump		
Pressure casting	SA-351	Grade CF-3 or CF-3M Grade CF-8 or CF-8M
Pressure forgings	SA-182	Grade F304 or F304L/LN Grade F316 or F316L/LN
	SA-266	Grade 2
Tubes and pipes	SA-213 SA-312	Grade TP304 or TP304L Grade TP316 or TP316L
Closure Stud Bolts	SA-193	Grade B6 or B7
	SA-638	G660
Closure Stud Nuts	SA-194	Grade 6 or 7
	SA-564	630
Cladding, Buttering	Type 308L/309L Stainless Steel Strip Electrode	-
Piping	SA-106	Grade B
Valves	SA-105	
	SA-266	Grade 2
	SA-216	Grade WCB
Fitting / Flange	SA-105	
	SA-266	Grade 2
Weld Filler Material	SFA-5.1	E6018, E7018, E6016, E7016
	SFA-5.18	ER70S-2, ER70S-3, ER70S-4, ER70S-6

~~ESF Component~~	~~Material Specification~~
~~Emergency Feedwater Pump~~	~~SA-216 Gr. WCB and WCC~~
	~~SA-217 Gr. WC9~~
	~~SA-351 Gr. CF8M and CF3M~~
	~~SA-487 Gr. CA6NM~~
~~Piping/Tubing~~	~~SA-106, Gr. B and C~~
	~~SA-213, TP 304, 304L, 316 and 316L~~
	~~SA-249, TP 304L and 316L~~
	~~SA-312, TP 304, 304L and 316L~~
	~~SA-53 Gr.A~~
	~~SA-106 Gr.B~~
~~Fittings/flanges~~	~~SA-182, TP F304, F304L, F316, and F316L~~
	~~SA-403, WP 304, 304L, 304W, and 304LW~~
	~~SA-312 TP304~~
	~~SA-53 Gr.A~~
	~~SA-106 Gr.B~~

	~~SA-479 TP304~~
	~~SA-182 F304, Class 150~~
	~~SA-105~~
	~~SA-181 Gr.70, Class 900~~
~~Plate~~	~~SA-240, TP 304, 304L, and 316L~~
	~~SA-36~~
	~~SA-515 Gr. 60, 70~~
	~~SA-516 Gr. 60, 70~~
~~Shapes~~	~~SA-36~~
	~~ASTM A-36~~
~~Bolts/nuts/studs/pins~~	~~SA-193 Gr. B6, B7, B8, and B8M~~
	~~SA-194, Gr. 2H, 8H, 8M, 7, 4, 6, and B8~~
~~Castings~~	~~SA-216 Gr. WCB and WCC~~
	~~SA-217 Gr. WC9~~
	~~SA-351 Gr. CF8M and CF3M~~
	~~SA-487 Gr. CA6NM~~
~~Forgings~~	~~SA-182, TP F304, F304L, F316, and F316L; Gr. F11, F22 and FXM-19~~
	~~SA-350 Gr. LF1 and LF2~~
	~~SA-479, TP 304, 304L, 316 and XM-19~~
~~Bars~~	~~SA-479, TP 304, 316 and 410 Gr. 316L, F316 and XM-19~~
	~~SA-564 Gr. 630 [17-4 PH]~~

Chapter 11

US-APWR DCD Chapter 11 Rev. 2, Tracking Report Rev. 3 Change List

Page	Location (e.g., subsection with paragraph/ sentence/ item, table with row/column, or figure)	Description of Change
11.2-5	Section 11.2.1.4	RAI 523-4246, Question 11.02-29 Add statement referring newly added Table 11.2-20
11.2-5	Section 11.2.1.4	RAI 523-4246, Question 11.02-32 Add statement about LWMS.
11.2-6	Section 11.2.1.6	RAI 534-4256, Question 11.04-19 Add statement about Inspection and Enforcement (IE) Bulletin 80-10 (Ref.11.4-24)
11.2-16 11.2-17	Section 11.2.3.2	RAI 523-4246, Question 11.02-28 Add statement about radio effluent releases due to Liquid containing tank failures.
11.2-18	Section 11.2.4	RAI 523-4246, Question 11.02-29 Add a new section 11.2.4 on Testing and Inspection Requirements. Therefore previous Section 11.2.4 and 11.2.5 are renumbered Section 11.2.5 and 11.2.6 respectively.
11-2-19	Section 11.2.5	RAI 523-4246, Question 11.02-29 Add COL 11.2(7) about coating addresses RG 1.54 Revision1. (*)As per RAI response, Section 11.2.4 (Combined License Information) is applicable section to revise. However other Section 11.2.4 (Testing and Inspection Requirements) is added newly, then previous Section 11.2.4 is changed to Section 11.2.5.
11-2-19	Section 11.2.5	RAI 534-4256, Question 11.04-19 RAI replied to add COL 11.2(7) about mobile/portable LWMS connections. But COL 11.2(7) has been already numbered on RAI 523-4246, Question 11.02-29 as mentioned above. Then this COL item is renumbered for COL 11.2(8)
11-2-21	Section 11.2.6	RAI 523-4246, Question 11.02-29 Add reference 11.2-24 about protective coatings. (*)As per RAI response, Section 11.2.5 (References) is applicable section to revise. However other Section 11.2.4 is added newly, then previous Section 11.2.5 will is changed to Section 11.2.6.
11-2-21	Section 11.2.6	RAI 534-4256, Question 11.04-19 RAI replied to add Reference 11.2-24. But Reference 11.2-24 has been already numbered on RAI 523-4246, Question 11.02-29 as mentioned above. Then this Reference is renumbered for 11.2-25 (*)As per RAI response, Section 11.2.5 (References) is applicable section to revise. However other Section 11.2.4 is added newly, then previous Section 11.2.5 will is changed to Section 11.2.6.

US-APWR DCD Chapter 11 Rev. 2, Tracking Report Rev. 3 Change List

Page	Location (e.g., subsection with paragraph/ sentence/ item, table with row/column, or figure)	Description of Change
11.2-30 11.2-31 11.2-32	Table 11.2-9	RAI 523-4246, Question 11.02-30 Add notes and collect typographical errors for Table 11.2-9.
11.2-43	Table 11.2-16	RAI 523-4246, Question 11.02-30 Add notes for Table 11.2-16.
11.2-44 11.2-45	Table 11.2-17	RAI 523-4246, Question 11.02-28 Insert new column and add notes for each Table 11.2-17.
11.2-50	Table 11.2-21	RAI 523-4246, Question 11.02-29 RAI replied to add Table 11.2-20 about epoxy coatings. But Table 11.2-20 has been already existed in DCD. Then this table is renumbered for Table 11.2-21.
11.3-7	Section 11.3.2.1.3	RAI 535-4287, Question 11.03-17 Added sentence about oxygen gas analyzer.
11.3-8	Section 11.3.2.1.4	RAI 535-4287, Question 11.03-17 Added sentence about oxygen gas analyzer.
11.3-22	Table 11.3-3	RAI 535-4287, Question 11.03-17 Change description in table 11.3-3 about oxygen gas analyzer.
11.3-39	Table 11.3-12	RAI 535-4287, Question 11.03-16 Add Table 11.3-12 about component classification.
11.4-5	Section 11.4.1.4	RAI 523-4246, Question 11.02-29 Add statement about epoxy coating.
11.4-5	Section 11.4.1.4	RAI 534-4256, Question 11.04-19 Collect typographical errors and change sentence.
11.4-6	Section 11.4.1.6	RAI 534-4256, Question 11.04-19 Add statement about mobile or temporary equipment.
11.4-10	Section 11.4.2.2.1	RAI 536-4289, Question 11.04-20 Revise statement about spent resin handling and de-watering subsystem.
11.4-13	Section 11.4.2.4	RAI 536-4289, Question 11.04-20 Revise statement about effluent controls.
11.4-17	Section 11.4.4.5	RAI 534-4256, Question 11.04-19 Add statement about mobile and de-waxing system.
11.4-19	Section 11.4.8	RAI 534-4256, Question 11.04-19 ・ Change statement of COL 11.4(4). ・ Add COL11.4(10) RAI replied to add COL 11.4(9) about mobile and temporary solid radwaste processing and its interconnection to plant systems. But COL 11.4(9) has been already numbered on RAI 523-4246, Question 11.02-29 as mentioned below. Then this COL item is renumbered for COL 11.4(10)

US-APWR DCD Chapter 11 Rev. 2, Tracking Report Rev. 3 Change List

Page	Location (e.g., subsection with paragraph/ sentence/ item, table with row/column, or figure)	Description of Change
11.4-19	Section 11.4.8	RAI 523-4246, Question 11.02-29 Add COL 11.4(9) about coatings program used in the SWMS.
11.4-21 11.4-22	Section 11.4.9	RAI 534-4256, Question 11.04-19 ・ Collect typographical errors in reference 11.4-17. ・ Add a new reference 11.4-29 about contamination of nonradioactive system and resulting potential for unmonitored. ・ Add a new reference 11.4-34 about protective coatings applied to NPP.
11.4-27	Table 11.4-7	RAI 523-4246, Question 11.02-29 Add table newly about epoxy coatings.
11.4-28	Table 11.4-8	RAI 536-4289, Question 11.04-21 RAI replied to add Table 11.4-7 about component classification. But Table 11.4-7 has been already numbered on RAI 523-4246, Question 11.02-29 as mentioned above. Then this table is renumbered for table 11.4-8
11.5-3 11.5-4 11.5-5	Section 11.5.1.2 Section 11.5.2.1 Section 11.5.2.2.1	RAI 522-4247, Question 11.05-18 Revise sentence about process effluent radiation monitoring and sampling systems
11.5-20	Section 11.5.6	RAI 522-4247, Question 11.05-18 Add a new reference 11.5-31 about guidance on monitoring and responding to reactor coolant system leakage.

serves to minimize the release of the radioactive liquid to the groundwater and environment in accordance with BTP 11-6 (Ref.11.2-17) and 10 CFR 20.1406 (Ref.11.2-7). As an additional precaution, the COL Applicant is also required to provide an environment monitoring system (Section 11.5.5). Overflow from tanks or standpipe is directed to a near-by sump. The sump has liquid level detection. At high liquid levels, the level switch automatically activates the sump pump to forward the liquid to the WHT for processing. This design minimizes the potential for contamination of the facility and the environment, facilitates decommissioning, and minimizes the generation of radioactive waste.

Table 11.2-20 contains typical service level II concrete systems such as coating types, dry film thicknesses (DFT), and specific permeabilities for the three typical epoxy coatings. This table provides typical Service level II concrete epoxy coatings, but approved equivalent Service level II concrete epoxy coatings can be utilized as a liner.

Chemical wastes are collected and pH adjusted. The waste is neutralized prior to being pumped to waste holdup tanks for further processing or transferred to a container for disposal. Figure 11.2-1 provides flexibility to process chemical effluent either way.

The CVDT provides storage of reactor coolant pump (RCP) seal leakages, letdown water, inside containment valve leakages, and accumulator (ACC) drainage. The liquid collected is normally sent to the chemical and volume control system (CVCS) for processing. Nitrogen gas is used as a blanket in the tank to exclude oxygen and air.

The demineralizers are procured with a certain capability to remove ionic species and impurities to meet requirements in NRC Regulations 10 CFR Part 20, Appendix B and 10 CFR Part 50, Appendix I, to ensure that the effluent releases do not exceed regulatory limits (Table 11.2-7). Thus, an inspection of the amount of filtration and demineralizer media will be conducted to verify that the loading meets the vendor recommended loading for the demineralizer capabilities as specified in the vendor material, such as a vendor manual, for the equipment.

Replacement filters, charcoal, and resins will be purchased to meet performance standards which support overall system decontamination factors listed in Table 11.2-7.

11.2.1.5 Site-Specific Cost-Benefit Analysis

The LWMS is designed for use at any site. The design is flexible so that site-specific requirements such as preference of technologies, the degree of automated operation, and radioactive liquid waste storage can be incorporated with minor modifications to the design.

RG1.110(Ref. 11.2-21) outlines compliance with 10 CFR 50, Appendix I (Ref. 11.2-2) numerical guidelines for offsite radiation doses as a result of radioactive liquid effluents during normal operations, including AOOs. The cost-benefit numerical analysis as required by 10 CFR 50, Appendix I, Section II, Paragraph D (Ref. 11.2-2) demonstrates that the addition of items of reasonably demonstrated technology will not provide a more favorable cost benefit.

The COL applicant is to perform a site-specific cost-benefit analysis to demonstrate compliance with the regulatory requirements

11.2.1.6 Mobile or Temporary Equipment

The LWMS is designed with permanently installed equipment (i.e., tanks, filters, activated carbon filter, ion exchange columns, and pumps). The LWMS does not include the use of mobile or temporary equipment. However, a space is provided inside the A/B to accommodate future installation of mobile or temporary equipment. Process and utility piping and electrical connections are provided to forward liquid waste to future mobile system or temporary equipment, at the discretion of the facility operation. Treated liquid can be returned to the waste monitor tanks for sampling, recycling, and/or release. The COL applicant is responsible for ensuring that mobile and temporary liquid radwaste processing equipment and its interconnection to plant systems conforms to regulatory requirements and guidance such as 10 CFR 50.34a(Ref.11.2-5),10CFR 20.1406(Ref.11.2-7) and RG1.143(Ref.11.2-3).

Identification of mobile/portable LWMS connections that are considered non-radioactive but later may become radioactive through contact or contamination with radioactive systems and preparation of operating procedures for these mobile/portable LWMS connections, so that the guidance and information in Inspection and Enforcement (IE) Bulletin 80-10 (Ref. 11.4-24) is followed are the responsibility of the COL applicant.

11.2.2 System Description

The boundary of the liquid waste processing system starts at the interface valves for each of the input streams potentially containing radioactive material from other plant systems as indicated in Figure11.2-1. For many of these streams, the boundary of the LWMS starts at the respective building sump tank discharge line. The boundary of the liquid waste processing system ends at the isolation valve of the discharge lines to a tank or the discharge header.

The liquid waste processing system equipment drainage and floor drainage processing subsystem consists of four WHTs, two waste holdup tank pumps, two liquid filters, an activated carbon filter, four ion exchange columns, two waste monitor tanks, and two waste monitor tank pumps to collect treated fluid for analysis. A process flow diagram is presented in Figure 11.2-1(Sheet 1 of 3). The WHTs and waste monitor tanks and their associated pumps are located in the A/B. The filters and ion exchange columns are located at an elevation of 3’-7” in the A/B. Layout drawings of the A/B are presented in Figures 11.5-2a through k.

For the purpose of this Design Control Document (DCD), process flow diagrams with process equipment, flow data, tank batch capabilities, and key control instrumentation are provided to indicate process design, method of operation, and release monitoring. Piping and instrumentation diagrams (P&IDs) are to be included in the combined license application (COLA) after the preferred process control and operating methods are established.

The release physical location and configuration of the treated effluent is site specific. Detailed design information such as release point, effluent temperature and flow rate, and size and shape of flow orifices, is to be presented in the site specific detail design. The COL applicant is responsible for ensuring that the site-specific information of the LWMS, e.g., radioactive release points, effluent temperature, shape of flow orifices, etc., is to be provided in the COLA(COL11.2(2)).

The annual average release of radionuclides is estimated by the PWR-GALE Code (Ref.11.2-13) with the reactor coolant activities that is described in Section 11.1. The parameters used by the PWR-GALE Code are provided in Table 11.2-9, and the calculated effluents are provided in Table 11.2-10. The calculated effluents for the maximum releases are provided in Table 11.2-11.

The calculated effluent concentrations using annual release rates are then compared against the concentration limits of 10 CFR 20 Appendix B (Ref. 11.2-8); see Table 11.2-12 and Table 11.2-13.

The calculation uses 12,900 gpm cooling tower blowdown as dilution water (See Chapter 10, Subsection 10.4.5). The ratios to the concentration limits of 10 CFR 20 Appendix B (Ref 11.2-8) are 8.10E-02 (with expected releases) and 3.09E-01 (with maximum defined fuel defects), and these values are less than the allowable value of 1.0.

The individual doses are evaluated with LADTAP II Code (Ref. 11.2-14). The parameters used in the LADTAP II Code are listed in Table 11.2-14, and calculated doses are listed in Table 11.2-15. Based on these parameters, the dose to total body is 1.98 mrem/yr(Child) and the dose to organ is 2.54 mrem/yr (Child's liver). These values are less than the criteria of 3 mrem/y and 10 mrem/yr, respectively, as specified in 10 CFR 50 Appendix I (Ref. 11.2-2).

The COL applicant is to calculate doses to members of the public following the guidance of RG 1.109 (Ref 11.2-15) and RG 1.113 using site-specific parameters, and compares the doses due to the liquid effluents with the numerical design objectives of Appendix I to 10 CFR 50 (Ref 11.2-10) and compliance with requirements of 10 CFR 20.1302, 40 CFR 190.

11.2.3.2 Radioactive Effluent Releases due to Liquid Containing Tank Failures

In case of a failure of a tank containing radioactive liquid, the radioactive concentrations in the potable water supply located in the unrestricted area are evaluated with the procedure specified in NUREG-0133 Appendix A (Ref. 11.2-16), and the results are less than the limits of 10 CFR 20 Appendix B (Ref 11.2-8).

In the evaluation, the holdup tank, the waste holdup tank and boric acid tank are selected because they contain a large amount of radioactivity. The calculation model ~~was~~ is based on ~~the entire tank content directly released~~ an unmitigated release of the entire content of the tank to the groundwater system, ~~the~~ with subsequent mixing and ~~moving~~ migration ~~with~~ within the groundwater system. It is assumed that the released liquid is diluted with 4.4E+10 gallons of water ~~until~~ before it reaches to the location of the

potable water supply. This parameter is based on the conditions of actual sites. The model assume~~d~~s the tank content is diluted with only this body of water in the vicinity of the ponds surrounding the site. No other water (such as other discharges and groundwater) is credited as dilution water, and no credit is taken for retardation or suspension of radionuclide in the subsurface media. Hence the conservative assumption that the radionuclides are not filtered (or reduced) by the soil is used. In addition, groundwater transport and soil properties are site-specific parameters. ~~The~~ Threfore, COL Applicant is responsible for assessment of this model [COLA Item#11.2(3)] using the site specific parameters to evaluate the conservativeness of this analysis. In addition, the traveling time is assumed to be 365 days in order to cover the transfer rate of several radionuclides. Table 11.2-16 shows the evaluation conditions applied to each tank. ~~The fuel defect level is set to 0.12% of the core thermal power, which is based on Branch Technical Position (BTP) 11-6 (Ref 11.2-17).~~

Table 11.2-17 ~~shows~~ summarizes the evaluation results of radioactivity concentration at the location of the potable water supply. Branch Technical Position (BTP) 11-6 (Ref 11.2-17) Subsection B.2, endorses Appendix A of NUREG-0133, which describes the RATAF code for PWR plants. Accordingly, the RATAF code is utilized in this evaluation. The liquid radioactivity concentration in the tank is calculated by RATAF assuming a primary coolant concentration based on 1% fuel failure. However, for the determination of the critical receptor concentration BTP 11-6 allows the use of a source term based on the expected failed fuel fraction, which is set to 0.12% of the core thermal power. The evaluation result obtained from the case of the failure of the boric acid tank, which has the largest value of 2.2E-01, indicates that the ratio of concentration is still less than the allowable value of 1.0, in accordance with 10CFR 20 Appendix B (Ref 11.2-8). Satisfying the concentration limits of 10 CFR 20 Appendix B (Ref 11.2-8) results in a dose of less than 50 mrem/yr that is required in 10 CFR 20.1301 and 10 CFR 20.1302 (Ref.11.2-1). ~~BTP 11-6 Subsection B.2, endorses Appendix A of NUREG-0133, which describes the RATAF code for PWR plants. Accordingly, the RATAF code is utilized.~~
In addition to the 1% failed fuel assumption described above, the RATAF code uses several built-in parameters, including a plant capacity factor of 80%, which is less than most current operating power plants. However, as demonstrated in Table 11.2-17 the resultant effluent concentrations calculated by the RATAF analysis have sufficient margin to the acceptance criteria to cover any possible US-APWR capacity factor between 80% and 100%. As a result of the of the various built-in RATAF assumptions~~For the dominant nuclides Cs-134 and Cs-137~~, the reactor coolant activities for the dominant nuclides (Cs-134 and Cs-137) calculated by the RATAF code are higher than the realistic source terms as described in Table 11.1-9 (ie.,1.4E-02 μCi/ml vs. 2.1E-05 μCi/g in Table 11.1-9 and 1.0E-02 μCi/ml vs. 3.0E-05 μCi/g inTable 11.1-9 for Cs-134 and Cs-137 respectively, with the conversion of 1g=1ml) andequal for tritium (H-3).

The COL applicant is responsible for providing site-specific hydro-geological data (such as contaminant migration time), and analysis to demonstrate that the potential groundwater contamination resulting from radioactive release due to liquid containing tank failure is bounded by the analysis. This evaluation is limited to the impact of radioactive effluent releases due to tank failure. Table 11.2-18 evaluates the failure of

sumps, sump pumps, and drainage equipment. Since the Table 11.2-18 equipment items contain much smaller amount of liquid waste, the release impacts due to these equipment failures are minimal and are bounded by the impact of tank failure evaluated herein.

11.2.3.3 Offsite Dose Calculation Manual

The description for offsite dose calculation manual is given in Section 11.3.3.3.

11.2.4 Testing and Inspection Requirements

Preoperational testing of the LWMS is performed to verify the proper operation of equipment and processes, and is discussed in Chapter 14, Section 14.2. Performance testing of the LWMS is conducted to demonstrate acceptable performance of the radioactive waste processing and storage subsystems under normal operational conditions and AOOs as discussed in Chapter 14, Section 14.2. Thereafter, portions of the systems are tested as needed.

During initial testing of the system, performance of the process and utility (such as nitrogen) supply and mobile systems are tested to demonstrate conformance with design flows and process capabilities. An integrity test is performed on the system upon completion of construction.

Provisions are made for periodic inspection of major components to verify the capability and integrity of the systems. Display devices are provided to indicate vital parameters required in routine testing and inspection.

Epoxy coatings in cubicles that contain significant quantities of radioactive material, are Service Level II coatings as defined in RG 1.54 Revision 1, and are subject to the limited QA provisions, selection, qualification, application, testing, maintenance and inspection provisions of RG 1.54 and standards referenced therein, as applicable to Service Level II coatings. Post-construction initial inspection is performed by personnel qualified using ASTM D 4537 (Reference 11.2-22) using the inspection plan guidance of ASTM D 5163 (Reference 11.2-23).

~~11.2.4~~11.2.5 Combined License Information

COL 11.2(1) The COL applicant is responsible for ensuring that mobile and temporary liquid radwaste processing equipment and its interconnection to plant systems conforms to regulatory requirements and guidance such as 10 CFR 50.34a (Ref. 11.2-5), 10 CFR 20.1406 (Ref.11.2-7) and RG 1.143 (Ref. 11.2-3), respectively.

COL 11.2(2) Site-specific information of the LWMS, e.g., radioactive release points, effluent temperature, shape of flow orifices, etc., is provided in the COLA.

COL 11.2(3) The COL applicant is responsible for providing site-specific hydrogeological data (such as contaminant migration time), and analysis to demonstrate that the potential groundwater contamination resulting

from radioactive release due to liquid containing tank failure is bounded by the analysis discussed in Subsection 11.2.3.2.

COL 11.2(4) The COL applicant is to calculate doses to members of the public following the guidance of RG 1.109 (Ref 11.2-15) *and RG 1.113 using site-specific parameters, and compares the doses due to the liquid effluents with the numerical design objectives of Appendix I to 10 CFR 50* (Ref 11.2-10) *and compliance with requirements of 10 CFR 20.1302, 40 CFR 190.*

COL 11.2(5) The COL applicant is to perform a site-specific cost benefit analysis to demonstrate compliance with the regulatory requirements.

COL 11.2(6) The COL applicant is to provide piping and instrumentation diagrams (P&IDs).

COL 11.2(7) The COL Applicant is responsible for identifying the implementation milestones for the coatings program used in the LWMS. The coatings program addresses RG 1.54 Revision 1, recognizing that more recent standards may be used if referenced in DCD Section 11.2.

COL 11.2(8) The COL applicant is to describe mobile/portable LWMS connections that are considered non-radioactive but later may become radioactive through contact or contamination with radioactive systems (i.e., a non-radioactive system becomes contaminated due to leakage, valving errors, or other operating conditions in the radioactive systems), and operational procedures of the mobile/portable LWMS connections. The COL applicant is to prepare a plan to develop and use operating procedures so that the guidance and information in Inspection and Enforcement (IE) Bulletin 80-10 (Ref. 11.4-25) is followed.

~~11.2.5~~11.2.6 References

11.2-1 Standards for Protection Against Radiation, NRC Regulations Title 10, Code of Federal Regulations, 10 CFR Part 20, December 2002.

11.2-2 Numerical Guides for Design Objectives and Limiting Conditions for Operation to Meet the Criterion "As Low as is Reasonably Achievable" for Radioactive Material in Light-Water-Cooled Nuclear Power Reactor Effluents, NRC Regulations Title 10, Code of Federal Regulations, 10 CFR Part 50, Appendix I .

11.2-3 Design Guidance for Radioactive Waste Management Systems, Structures, and Components Installed in Light-Water-Cooled Nuclear Power Plants, Regulatory Guide 1.143, Rev. 2, November 2001.

11.2-17 Postulated Radioactive Releases due to Liquid-Containing Tank Failures. Branch Technical Position 11-6, NUREG-0800, U.S. Nuclear Regulatory Commission, Washington DC., March 2007.

11.2-18 Estimating Aquatic Dispersion of Effluent from Accidental and Routine Releases for the Purpose of Implementing Appendix I, Regulatory Guide 1.113, Rev. 1,U.S. Nuclear Regulatory Commission, Washington DC., April 1977.

11.2-19 Compliance with Dose Limits for Individual Members of the Public Title 10, Code of Federal Regulations, 10 CFR Part 20.1302.

11.2-20 Environmental Radiation Protection Standards for Nuclear Power Operations Title 40, Code of Federal Regulations, 40 CFR Part 190.

11.2-21 Cost-Benefit Analysis for Radwaste Systems for Light-Water-Cooled Nuclear Power Reactors. Regulatory Guide 1.110, March 1976.

11.2-22 Standard Guide for Establishing Procedures to Qualify and Certify Inspection Personnel for Coating Work in Nuclear Facilities, American Society for Testing and Materials, ASTM D 4537-04a.

11.2-23 Standard Guide for Condition Assessment of Coating Service Level Coating Systems in Nuclear Power Plants, American Society for Testing and Materials, ASTM D 5163-08.

11.2-24 Nuclear Regulatory Commission, Service Level I, II, and III Protective Coatings Applied to Nuclear Power Plants, Regulatory Guide 1.54, Rev. 1, July 2000.

11.2-25 Contamination of Nonradioactive System and Resulting Potential for Unmonitored, Uncontrolled Release of Radioactivity to Environment, U.S. Nuclear Regulatory Commission, IE Bulletin No. 80-10, May 6, 1980.

Table 11.2-9 Input Parameters for the PWR-GALE Code (Sheets 1 of 2)

Design Parameter	Design Value
Core thermal power (MWt)	4,451
Reactor coolant mass(lb)	6.46E+05
Reactor coolant letdown flow rate (gpm)	180
CVCS cation demineralizer flow rate (gpm)	7
Number of SGs	4
Total main steam flow rate (lb/hr)	2.02E+07
Seccondary coolant mass in SG (lb)	1.35E+05
Total SG blowdown flow rate (lb/hr)	1.554E+05
Blowdown treatment method	0
Regeneration time of condensate polishing system	N/A
Fraction of feedwater through the condensate polishing system	0
Reactor coolant leak rate to the containment for noble gas (1/d)(1)	0.0002
Decontamination factor for detergent waste	1.0
Shim Bleed	**-**
Shim bleed flow rate (gpd)	2,875
Decontamination factor for I	5.0E+03
Decontamination factor for Cs and Rb	2.0E+03
Decontamination factor for others	1.0E+05
Collection time (days)	20
Process and discharge time (days)	2
Fraction of waste to be discharged	1.0
Coolant Drain	**-**
Coolant drainage flow rate (gpd)	900
Fraction of reactor coolant activity	0.1
Decontamination factor for I	5.0E+03
Decontamination factor for Cs and Rb	2.0E+03
Decontamination factor for others	1.0E+05
Collection time (days)	20
Process and discharge time (days)	2
Fraction of waste to be discharged	1.0
Dirty Waste	
Dirty drainageflow rate (gpd)	2,023
Fraction of reactor coolant activity	0.18
Decontamination factor for I	1.0E+05
Decontamination factor for Cs and Rb	2.0E+02
~~Decontamination factor for Cs and Rb~~	~~2.0E+02~~
Decontamination factor for others	1.0E+04
Collection time (days)	5
Process and discharge time (days)	0
Fraction of waste to be discharged	1.0
Blowdown Waste	
Fraction of the blowdown stream processed	1.0
Decontamination factor for I	1.0E+02
Decontamination factor for Cs and Rb	1.0E+02
Decontamination factor for others	1.0E+03
Collection time	N/A
Process and discharge time	N/A
Fraction of waste to be discharged	0
Regenerant Waste	N/A

Notes:

1: This value is based on 10 gpd of leakage inside containment (to containment sump)(see ~~table~~Table 11.2-2) and reactor coolant mass.

2: The basis of the PWR-GALE source term calculation uses a built-in plant capacity factor of 80%, which is less than the expected capacity factor for the US-APWR. The difference in capacity factor has no impact on the calculated liquid effluent release and resultant dose, but there is a minor impact on the gaseous effluent releases and resultant doses. However, the calculated values have sufficient margin to the acceptance criteria to cover any possible US APWR capacity factor between 80% and 100%.

Table 11.2-9 Input Parameters for the PWR-GALE Code (Sheets 2 of 2)

Design Parameter	Design Value
Gaseous Waste Management System and HVAC System	
Continuous gas stripping of full letdown flow	None
Holdup time for Xe (days)	45
Holdup time for Kr (days)	2.55
Fill time of decay tanks for gas stripper	N/A
Gas waste system: High-efficiency particulate air (HEPA) filter	None
Auxiliary building: Charcoal filter	None
Auxiliary building: HEPA filter	None
Containment volume (ft^3)	2.74E+06
Containment atmosphere internal cleanup rate (ft^3/min)	0
Removal efficiency of charcoal filter (%)	0
Removal efficiency of HEPA filter (%)	0
Containment high volume purge:	
Number of purges per year (in addition to two shutdown purges)	0
Removal efficiency of charcoal filter (%)	0
Removal efficiency of HEPA filter (%)	99
Containment low volume purge rate (ft^3/min)	2,000
Removal efficiency of charcoal filter (%)	70
Removal efficiency of HEPA filter (%)	99
Fraction of iodine released from blowdown tank vent	0
Fraction of iodine removed from main condenser air ejector release	0

Notes:

1: This value is based on 10 gpd of leakage inside containment (to containment sump)(see ~~table~~Table11.2-2) and reactor coolant mass.

2: The basis of the PWR-GALE source term calculation uses a built-in plant capacity factor of 80%, which is less than the expected capacity factor for the US-APWR. The difference in capacity factor has no impact on the calculated liquid effluent release and resultant dose, but there is a minor impact on the gaseous effluent releases and resultant doses. However, the calculated values have sufficient margin to the acceptance criteria to cover any possible US APWR capacity factor between 80% and 100%.

Table 11.2-16 Parameters for Calculation of Liquid Containing Tank Failures

Tank	Volume of tank (gal) (1)	Flow Rate (gpd)	Fraction of Reactor Coolant Activity (PCA)	Hydrological Travel Time (days)	Tank Factor(2) (3)
Holdup Tank	1.2E+5	Shim Bleed : 2875 Coolant Drain : 900	Shim Bleed : 1.0 Coolant Drain : 0.1	365	1.0 (All nuclides)
Waste Holdup Tank	3.0E+4	2023	0.18	365	1.0 (All nuclides)
Boric Acid Tank	6.6E+4	Shim Bleed : 2875 Coolant Drain : 900	Shim Bleed : 1.0 Coolant Drain : 0.1	365	1.0(Tritium) 0.2(Anion) 0.04(Cs,Rb) 0.2(Others)

Notes:

1. It is assumed that water equivalent to 80% of the tank volume is discharged and the volume of water contributing to dilution is 4.4E + 10 gal for defining the hydrological dilution factor of each tank.

   Hydrological Dilution Factor = 4.4E+10 / (Tank Volume x 0.8)

2. Tank factor is the ratio considering the removal effect by demineralizers or other treatment equipments prior to the tank.
3. The TFs of evaporators express the increase in concentration of radionuclides in the evaporator bottoms resulting from evaporator operation. The value of TF for evaporator is 0.02.
4. The basis of the RATAF source term calculation uses a built-in plant capacity factor of 80%, which is less than the expected capacity factor for the US-APWR. This difference in capacity factor has no impact on liquid effluent release concentrations due to liquid containing tank failures.

Table 11.2-17 Calculation Results of Effluent Concentrations due to Liquid Containing Tank Failures

1 : Holdup Tank

Isotope(1)	Concentration in the tank (μCi/ml)(3)	Critical Receptor Concentration (μ Ci/ml)	Effluent Concentration Limit (μ Ci/ml)(2)	Fraction of Concentration Limit
H-3	7.8E-01	1.6E-06	1.0E-03	1.6E-03
Cs-134	4.7E-02	8.8E-09	9.0E-07	9.7E-03
Cs-137	3.4E-02	8.8E-09	1.0E-06	8.8E-03
TOTAL				**2.0E-02**

Note:
1. Nuclides less than 1.0E-3 in fraction of concentration limit are excluded.
2. 10CFR20 Appendix B Table 2
3. RATAF output based on 1% fuel defect level (except for tritium)
4. Adjusted values based on 0.12% fuel defect level (except for tritium)

2 : Waste Holdup Tank

Isotope(1)	Concentration in the tank (μCi/ml)(3)	Critical Receptor Concentration (μ Ci/ml)	Effluent Concentration Limit (μ Ci/ml) (2)	Fraction of Concentration Limit
Cs-134	2.1E-02	9.8E-10	9.0E-07	1.1E-03
Cs-137	1.5E-02	9.8E-10	1.0E-06	1.0E-03
TOTAL				**2.1E-03**

Note:
1. Nuclides less than 1.0E-3 in fraction of concentration limit are excluded.
2. 10CFR20 Appendix B Table 2
3. RATAF output based on 1% fuel defect level
4. Adjusted values based on 0.12% fuel defect level

3 : Boric Acid Tank

Isotope(1)	Concentration in the tank (μCi/ml)(3)	Critical Receptor Concentration (μ Ci/ml)	Effluent Concentration Limit (μ Ci/ml) (2)	Fraction of Concentration Limit
Cs-134	1.2E+00	9.0E-08	9.0E-07	1.0E-01
Cs-137	8.6E-01	1.2E-07	1.0E-06	1.2E-01
TOTAL				**2.2E-01**

Note:

1. Nuclides less than 1.0E-3 in fraction of concentration limit are excluded.
2. 10CFR20 Appendix B Table 2
3. RATAF output based on 1% fuel defect level
4. Adjusted values based on 0.12% fuel defect level

Table 11.2-21 Typical Service Level II Concrete Systems Epoxy Coatings

Coatings	DFT	Specific Permeability	
		$g/m^2/mil/24hrs$	$g/m^2/mil/24hrs$
No. 5500 Kolor-poxy self leveling floor coating	40 mils	0.6	2.2
No. 3500 Kolor-poxy self- priming surf. Enamel	16 mils	2.7	10.5
No. 3200 Kolor-poxy white primer	9 mils	2.2	8.7
N-series Neothane Enamel	7 mils	18.0	70.9

height of the release point is same height of the top of the containment and the COL applicant is responsible to include the site-specific vent stack design.

11.3.2.1 Component Description

This section provides a general description of the key GWMS equipment. Specific component design parameters are summarized in Table 11.3-2. Design codes, standards, and materials for construction of these components are summarized in Table 11.3-11, and are consistent with RG 1.143 (Ref. 11.3-2). The Equipment Class 6 components are designed in compliance with applicable codes and standards, and guidelines provided in RG 1.143 (Ref. 11.3-2).

11.3.2.1.1 Waste Gas Compressors

There are two waste gas compressors. The waste gas compressors continuously draw gases from various systems in the plant and compress the gases into the gas surge tanks. One compressor is used for normal operation and is capable of handling the cover gas from a HT. A second compressor is standing by as backup. The waste gas compressors are water sealed centrifugal units and contain gas coolers and moisture separators. The moisture separator level is equipped with a level control valve. Primary makeup water (PMW) is used as seal water during normal operation. Each gas compressor is sized to handle 100% of the rated load during normal operation including AOOs.

11.3.2.1.2 Gas Surge Tanks

Four gas surge tanks are provided. One is normally set up to receive compressed gases from the waste gas compressor. A second gas surge tank is available for discharge. A third gas surge tank is primarily used for temporary storage of cover gas, and the fourth gas surge tank is a backup. The four gas surge tanks are interconnected and any of the four can be used for any of these functions. In addition, each gas surge tank is independent and functions as a redundant unit. In the unlikely event that one is not functional due to a gas explosion, the others remain unaffected.

Each gas surge tank is provided with pressure control valves to automatically isolate the tank when it reaches the predetermined setpoint. The high-pressure signal provides alarms both in the radwaste control room and the MCR.

Each gas surge tank is sized to retain waste gases discharged from the waste gas compressor during normal operation, including AOOs, and plant shutdown conditions. The gas surge tanks are vertical cylindrical tanks and are made of carbon steel.

11.3.2.1.3 Oxygen Analyzer

One non-sparking oxygen analyzer unit containing dual analyzers and monitors is provided downstream of the waste gas dryer to continuously monitor the concentration of oxygen upstream of the charcoal beds. The oxygen content of the waste stream is controlled to preclude the formation of a flammable mixture. The oxygen gas analyzer skid will have automatic control features to automatically isolate the feed to the charcoal

adsorbers by closing the valves to the waste gas dryer and annunciate alarms both locally and in the MCR for operator actions.

11.3.2.1.4 Hydrogen/Oxygen Analyzers

Two non-sparking hydrogen and oxygen gas analyzers monitor the concentrations of hydrogen and oxygen in GWMS components. During normal operation, one is in service to measure the oxygen and hydrogen concentration on a periodic basis and the second one is used as a backup. The second gas analyzer provides compliance with the redundancy guidance of NUREG-0800 (Ref. 11.3-12), and ANSI/ANS-55.4, Section 4.7 (Ref. 11.3-6). The hydrogen and oxygen analyzers do not operate continuously as does the oxygen analyzer. These instruments are used intermittently, mainly during the discharge mode of operation.

During normal plant operation, hydrogen concentration in the gas stream does not exceed 2% by volume on a moisture-free basis at the defined air flow range, as shown in Table 11.3-1. The 2% limit is set administratively so that the operator has sufficient time to investigate the cause and take corrective actions before the concentration reaches the 4% limit. The 2% limit is discussed in RG 1.189 (Ref. 11.3-8).

During startup or other reduced power operations, hydrogen concentration in the gaseous stream is not likely to come close to 2% due to the lower power operation and reduced radiolysis. However, the administrative limit is still set at 2% to comply with RG 1.189 so that the operator has sufficient time to take corrective actions before the concentration reaches the 4% limit.

In the unlikely case that the oxygen concentration reaches 4%, automatic control features are initiated at this “high-high alarm” setting. When the high-high alarm occurs, the sources of the gas to the charcoal bed are isolated by closing the valves. These valves fail close. Under these conditions the gas analyzers will annunciate alarms both locally and in the main control room. The waste gas analyzer skids will have automatic control features to automatically isolate the feed to the charcoal adsorbers by closing the feed valves to the waste gas dryer located upstream of charcoal adsorber, and annunciate alarms both locally and in the MCR for operator actions.

11.3.2.1.5 Waste Gas Dryer

The waste gas dryer skid consists of four major components: two gas coolers, one moisture separator tank, three molecular sieve tanks, and three blower fans. The purpose of the waste gas dryer skid is to remove moisture from the effluent and protect the charcoal bed adsorbers. The redundancy provided on this skid allows the operators to cycle between the molecular sieve tanks when one becomes saturated with moisture.

Each gas cooler and molecular sieve tank is sized to handle 100% of the rated load during normal operation, including AOOs. A gas sample tap is provided downstream of the waste gas dryer skid to permit gas sampling. The following provides detailed information on each subcomponent.

11.3.2.1.5.1 Waste Gas Coolers

Table 11.3-3 Equipment Malfunction Analysis (Sheets 1 of 2)

Equipment Item	Malfunction	Result(s)	Alternate Action
Radiation monitor	Fails to indicate.	Radiation monitor indication will be lost. The discharge valve will close and the system automatically switches to the compressor suction and routes the gas to the gas surge tank.	Manual samples can be taken downstream of the gas surge tank by the oxygen and hydrogen analyzer skids to support automatic function. Gas can be released based on the sample results.
Moisture separator level indication on gas dryer skid	High-level failure causing water level to increase.	The gas dryer will not be able to perform its function and maintain the level/gas flow. The high and low level indication will be lost. The dew point indication downstream of the dryer skid will show excessive moisture.	Operator can manually control the moisture separator level when system is in service.
Moisture separator level indication for the compressor skid	High or low level failure.	Level indication failure will cause compressor to fail. Compressor will lose its sealing capability and will not be able to maintain the pressure.	Operator can manually control the moisture separator level when the system is in service or switch to backup compressor.
~~Oxygen / hydrogen analyzer skids; oxygen analyzer skid~~	~~Oxygen / hydrogen analyzer skid and /or oxygen analyzer skid fails to monitor hydrogen or oxygen concentration.~~	~~Eventually, the gas mixture would become combustible. The redundant oxygen/hydrogen analyzer skid and oxygen analyzer skid would detect an explosive mixture. Even when both analyzers are out of service, manual sampling can support the automatic function.~~	~~Either the oxygen/hydrogen analyzer skid or the oxygen analyzer would detect an explosive mixture or a manual sample can be taken to verify gas concentrations.~~
Oxygen Analyzer with dual independent channels measuring oxygen concentrations	One channel failure	Operation may continue as the other channel can determine oxygen concentration to support continuous operation. MCR operator is notified for channel failure.	Waste gas analyzers data can be used.
Two separate waste gas analyzers analyzing hydrogen and oxygen concentrations	One waste gas analyzer failure	Operation may continue as the other waste gas analyzer can determine oxygen and hydrogen concentrations to support continual operation. MCR operator is notified for one analyzer failure; standby analyzer automatically kicks in for analysis.	Oxygen analyzer data can be used.
Charcoal bed	Charcoal bed is exposed to moisture and the dew point indicates high moisture content.	The charcoal bed cannot provide the delay function for the Xe, Kr, or other radionuclide.	Bypass the first train of the carbon beds, purge the tanks with N_2 gas to remove moisture, or replace the bed with a fresh charcoal bed if purging does not work.

Table 11.3-12 Component Classification

Component	Safety Classification
Waste Gas Surge Tanks	RW IIa
Charcoal Beds	RW IIa
Waste Gas Compressor Package	RW IIb
Waste Gas Dryer	RW IIb
Oxygen Gas Analyzer	RW IIc
Waste Gas Analyzer (Hydrogen/Oxygen)	RW IIc

- The SWMS is operated from the radwaste control room and/or via a local control panel. Priority alarm signals such as a SRST level exceeding the setpoint are sent to the radwaste control room in the A/B.

- The SWMS is designed to operate continuously during normal condition and AOOs. For equipment sizing and process capability determination, the SWMS is designed to process the maximum design basis input in one week, assuming 40 hours work week, or processing one tank of SRST in one operating shift, whichever is controlling. When wastes are accumulated in excess of the normal operation, additional solid waste processing can be performed.

- The SWMS, including the modular de-watering subsystem, is connected to non-radioactive systems such as the PMW, nitrogen, and service air systems. The non-radioactive connections (e.g., PMW for flushing, nitrogen gas for sluicing spent resin, and service air to operate valves and pumps) to the SWMS components, including the modular de-watering system, contain double isolation valves and special fittings (e.g., one check valve and one isolation valve) to minimize the potential for cross contamination of the non-radioactive system. Table 11.4-7 contains typical service level II concrete systems such as coating types, dry film thicknesses (DFT), and specific permeabilities for the three typical epoxy coatings. This table provides typical Service level II concrete epoxy coatings, but approved equivalent Service level II concrete epoxy coatings can be utilized as a liner. These methods provide compliance with 10 CFR 20.1406 (Ref. 11.4-16)

- Each of the SRST cubicles is designed to contain the maximum liquid inventory in the event that the tank ruptures. These cubicles are coated with an impermeable epoxy liner (coating), up to the cubicle wall height equivalent to the full tank volume, to facilitate decontamination of the facility in the event of tank leakage and failure. This design feature, in conjunction with early leak detection, drainage and transfer capabilities serves to minimize the release of the radioactive liquid to the groundwater and environment in accordance with the BTP 11-6 (Ref. 11.4-32) and 10 CFR 20.1406 (Ref. 11.4-16). As an additional precaution, the COL Applicant is also required to provide an environmental monitoring system (Section 11.5.5).

- The SWMS has a temporary equipment connection for sending the waste directly to mobile equipment or to a high-integrity container for processing the solid radwaste. This connection meets RG 1.143 (Ref. 11.4-1) and ~~ANSI 40.37-200~~ ANSI/ANS-40.37-2009 "Mobile Low-level Radioactive Waste Processing System" (Ref. 11.4-17) ~~requirements~~ or its equivalent requirements at the time of use.

11.4.1.5 Site-Specific Cost-Benefit Analysis

The SWMS is designed to be used for any site or plant. The design is flexible so that site-specific requirements, such as preference of technologies, degree of automated operation, and radioactive waste storage, can be incorporated with minor modifications to the design.

RG1.110 (Ref. 11.4-13) outlines compliance with to 10 CFR 50, Appendix I (Ref. 11.4-12) numerical guidelines for offsite radiation doses as a result of gaseous or liquid radioactive effluents during normal operations, including AOOs. The cost-benefit numerical analysis as required by 10 CFR 50, Appendix I (Ref. 11.4-12), Section II, Paragraph D demonstrates that the addition of items of reasonably demonstrated technology will not provide a favorable cost benefit. The COL applicant will perform a site-specific cost benefit analysis to demonstrate compliance with the regulatory requirements.

11.4.1.6 Mobile or Temporary Equipment

The SWMS is designed with permanently installed equipment (i.e., tanks and a crane, etc.), modular equipment (the spent resin de-watering subsystem), and some mobile equipment. The purpose of the modular and mobile design is to provide ease of equipment replacement due to either advances in treatment technologies and/or broken equipment ; such are further discussed in Sections 11.4.2, 11.4.4, and 11.4.4.5. The provision and conformance requirements for the mobile system or temporary equipment for solid radioactive waste processing shall be in accordance with ANSI/ANS-40.37-~~1993~~2009:Mobile Radioactive Waste Processing Systems or its equivalent standard at the time of use. ~~This is the responsibility of the COL applicant.~~ The COL applicant is responsible for ensuring that mobile and temporary solid radwaste processing equipment and its interconnection to plant systems conforms to regulatory requirements and guidance such as 10 CFR 50.34a (Ref. 11.4-11), 10 CFR 20.1406 (Ref.11.4-16) and RG 1.143 (Ref. 11.4-1).

11.4.2 System Description

The SWMS controls, collects, handles, processes, packages, and temporarily stores dry and wet solid waste generated by the plant prior to offsite shipping and disposal resulting from normal operations, including AOOs. The SWMS processes and packages waste from the LWMS, the CVCS, and the SFPCS. The SWMS also can receive solid waste from the CPS and the SG blowdown when the waste becomes radioactive. Waste from these systems consists of spent resin, spent charcoal, sludge, general contaminated plant debris, and spent filter elements. As these waste types differ in characteristics and contamination levels, the SWMS is divided into five subsystems that handle the following waste types:

- Dry active waste
- Spent filter elements
- Spent resin
- Spent activated carbon
- Oil and sludge

The boundary of the SWMS starts at specific waste generation streams and ends at the waste storage and truck bay of shipment of all solid waste. There is no direct discharge

Proper controls, including flow elements, interlocks and level and temperature indications, are provided with the fillhead to control slurry flow so that only the required amount of spent resin is transferred into the high-integrity container. The resin transfer automatically stops when high level (typically 85-90% of container useable volume, or about 65" to 67" in container height)~~or high temperature~~ setpoint~~s~~ ~~are~~ is reached in the high-integrity container. A separate level switch is provided approximately 2" above the high level to prevent over filling of the HIC. Additionally, a permanent level stick is installed inside the container for continuous monitoring of the liquid level in the HIC on the control panel. The operator also can stop ~~this~~ the filling operation manually when the closed circuit television (CCTV) camera indicates a high level. The CCTV camera is used in case of level transmitter failure to minimize the potential for an overflow condition. The de-watering pump serves to remove and reduce standing water in the high-integrity container to less than 0.5% by volume to meet the transportation requirements of 49 CFR 173, Subpart I (Ref. 11.4-8).Gaseous exhaust ~~from the fillhead~~ during transfer and dewatering activities is vented via a vent port connection on the fillhead to the A/B ventilation system.

11.4.2.2.2 Spent Charcoal Handling

The spent charcoal handling subsystem shares the use of the spent resin tanks and the de-watering equipment as described above.

Mixing waste is not recommended, therefore, the spent activated carbon from the LWMS is normally sent directly to disposal containers. De-watering of the spent carbon uses the same process as for spent resin. If the SRST is empty, the spent carbon can also be sent to the SRST for temporary storage until further processing is warranted. The process flow diagram of the spent carbon handling subsystem is presented in Figure 11.4-2.

The resin fill tank provides a means of filling demineralizers with fresh resins and charcoal adsorber with activated charcoal. The demineralizers are filled by gravity feed from a stationary resin fill tank (hopper). This tank is equipped with hoses to reach all the demineralizers. This tank is discussed in Section 9.3.

11.4.2.2.3 Oil and Sludge Handling

In areas where rotating equipment requires the use of oil for lubrication and decontamination for maintenance, the area drainage may contain lubricants and other waste solvents. This drainage is collected in the area sump tanks, which are specially designed to provide staging and oil separation by gravity. The separated oils are transferred directly into disposable drums. This waste may contain a low level of radioactive contaminants and is forwarded to an offsite vendor for final treatment and disposal. Operating procedures control all the chemicals that are used in the plant. The sump tank is designed to separate suspended solids. The suspended solids are extracted from the sump tank and transferred into the disposal container as sludge. The process flow diagram of the oily waste and sludge subsystem is presented in Figure 11.4-3.

Normally, no effluent is released from the SWMS. Liquid removed from the spent resin is transferred via the vacuum de-watering pump back to the WHTs for further processing in the LWMS. PMW is used for spent resin sluicing. The water extracted from the spent resin de-watering operation does not contain any chemical impurities. It is contaminated with resin fines and also some dissolved nuclides due to the liquid-solid equilibrium phenomenon. This water is forwarded to the WHTs for treatment. Also the contamination is low and is bounded by the design basis source term used for the LWMS treatment design. The dewatering area is designed with area drainage collection of any decontamination water. In the event that spillage occurs, or that the waste container drops and spills, decontamination water is available to clean the area. The drainage is directed to the WHTs for processing.

The spent resin transfer and dewatering operations are controlled from the radwaste control room in the A/B. The dewatering operation can also be controlled from a local control console located next to the dewatering cubicle. The spent resin filling and de-watering operations have level control setpoints. ~~The ranges, setpoints, and references for these instruments are to be developed in the detailed design phase and are not provided in this DCD.~~Refer to Section 11.4.2.2.1 for details for the setpoint data.

During the operation of the SWMS, the individual component vent is processed through the GWMS (e.g., SRST vent) or the HVAC system (e.g., high-integrity containers) so that neither dust nor contaminated air is released to the workspaces.

11.4.2.5 Operation and Personnel Doses

The SRSTs are located in individually shielded cubicles in the A/B. These cubicles that contain significant quantities of radioactive material are coated with an impermeable epoxy liner (coating), up to the cubicle wall height equivalent to the full tank volume, to facilitate decontamination of the facility in the event of tank leakage and failure. This design feature, in conjunction with early leak detection, drainage and transfer capabilities, serves to minimize the release of the radioactive liquid to the qroundwater and environment in accordance with the BTP 11-6 (Ref. 11.4-32), 10 CFR 20.1302 (Ref. 11.4-15) and 10 CFR 20.1406 (Ref. 11.4-16). As an additional precaution, the COL Applicant is also required to provide an environmental monitoring system (Section 11.5.5). Normally, these cubicles are not occupied and the entrance is under administrative control and physical control with locked doors. Entrances are provided for inspection for ease of ingress and egress; therefore, minimizing stay time and radiation doses.

The de-watering operation is also performed in a shielded and epoxy-lined cubicle. The fillhead is handled remotely and has motors to automatically dislodge from the high-integrity containers. This design minimizes contact handling after the high-integrity container is filled. Control of the de-watering operation is performed in a separately shielded cubicle and/or in the radwaste control room. This design approach minimizes personnel radiation doses and complies with the dose limits of RG 8.8 (Ref. 11.4-2) and 10 CFR 20 (Ref. 11.4-3).

11.4.4.5 Mobile De-watering System

The mobile de-watering subsystem includes modular skids that are designed to be readily mobile and flexible. This mobile de-watering subsystem is typically comprised of one high-integrity container, a de-watering fillhead station, a pump, a control console, and a CCTV to monitor tank level operation. A level instrument, temperature instrument, and a CCTV are provided as part of the fillhead assembly so that the high-integrity container is not over flowed. A configuration of the mobile de-watering system is depicted in Figure 11.4-2. Identification of mobile/portable SWMS connections that are considered non-radioactive but later may become radioactive through contact or contamination with radioactive systems and preparation of operating procedures so that the guidance and information in Inspection and Enforcement (IE) Bulletin 80-10 (Ref. 11.4-29) is followed are the responsibility of the COL applicant.

11.4.5 Malfunction Analysis

The spent resin handling subsystem is protected from component failure and operator error through a series of safety interlocks (i.e. manual start and automatic stop) such as the level and temperature alarms, which automatically stop the transfer operation. The following administrative conditions are to be verified by the operator before each resin transfer operation:

1. A waste container is properly in place and the container is not full or overweight (manual operation).
2. The fillhead assembly is secured onto and covering the container prior to the start of the filling and de-watering operation (manual operation).
3. Remote and continuous viewing of container filling and de-watering are operational using remote cameras and light assembly (manual function).
4. High level or temperature alarms with automatic isolation functions are operational.

Steps 1 through 3 consist of manual operation and are controlled by plant procedures. Failure to meet the step 4 condition automatically stops the transfer operation. The operation maybe interrupted by the operator at any time and the process restarted without adverse consequences. The operation maybe restarted at the same point in the process after failure has been remedied. Table 11.4-5 Equipment Malfunction Analysis identifies the major equipment malfunctions.

11.4.6 Testing and Inspection Requirements

Preoperational testing of the SWMS is performed to verify the proper operation of equipment and processes, and is discussed in Chapter 14, Section 14.2. Performance testing of the SWMS is conducted to demonstrate acceptable performance of the radioactive waste processing and storage subsystems under normal operational conditions and AOOs as discussed in Chapter 14, Section 14.2. Thereafter, portions of the systems are tested as needed.

operating conditions in the radioactive systems)~~, and operational procedures of the mobile/portable SWMS connections~~. The COL applicant is to prepare a plan to develop and use operating procedures so that the guidance and information in Inspection and Enforcement (IE) Bulletin 80-10 (Ref. 11.4-29) is followed.

COL 11.4(5) The current design provides collection and packaging of potentially contaminated clothing for offsite shipment and/or disposal. Depending on site-specific requirements, the COL applicant can send the wastes to an offsite laundry facility processing and/or bring in a mobile compaction unit for volume reduction. The laundry services, including contracted services and/or a temporary mobile compaction subsystem, are COL items.

COL 11.4(6) The COL applicant is required to perform a site-specific cost benefit analysis to demonstrate compliance with the regulatory requirements.

COL 11.4(7) The SWMS design does not include solid waste processing facility (e.g. de-watering system, compactor for reducing waste volume) but provides the flexibility for the site-specific utilities to add compaction equipment or to adopt contract services from specialized facilities. This is the responsibility of the COL applicant.

COL 11.4(8) The COL applicant is to provide piping and instrumentation diagrams (P&IDs).

COL 11.4(9) The COL Applicant is responsible for identifying the implementation milestones for the coatings program used in the SWMS. The coatings program addresses RG 1.54 Revision 1, recognizing that more recent standards may be used if referenced in DCD Section 11.4.

COL 11.4(10) The COL applicant is responsible for ensuring that mobile and temporary solid radwaste processing and its interconnection to plant systems conforms to regulatory requirements and guidance such as 10 CFR 50.34a (Ref. 11.4-11), 10 CFR 20.1406 (Ref.11.4-16) and RG 1.143 (Ref. 11.4-1).

11.4.9 References

11.4-1 Design Guidance for Radioactive Waste Management Systems, Structures, and Components Installed in Light-Water-Cooled Nuclear Power Plants, Regulatory Guide 1.143, Rev. 2, November 2001.

11.4-2 Information Relevant to Ensuring that Occupational Radiation Exposures at Nuclear Power Stations Will Be as Low as Is Reasonably Achievable, Regulatory Guide 8.8, Rev. 3, June 1978.

11.4-17 Mobile Low-level Radioactive Waste Processing System, ~~ANSI 40.37-200~~ANSI/ANS-40.37-2009.

11.4-18 Deleted

11.4-19 Waste classification, NRC Regulations Title 10, Code of Federal Regulations, 10 CFR Part 61.55.

11.4-20 Waste characteristics, NRC Regulations Title 10, Code of Federal Regulations, 10 CFR Part 61.56.

11.4-21 Requirements for Transfers of Low-Level Radioactive Waste Intended for Disposal at Licensed Land Disposal Facilities and Manifests, NRC Regulations Title 10, Code of Federal Regulations, 10 CFR Part 20, Appendix G.

11.4-22 Licensing requirements for land disposal of radioactive waste, NRC Regulations Title 10, Code of Federal Regulations, 10 CFR Part 61.

11.4-23 Nuclear Energy Institute, Generic FSAR Template for Process Control Program, NEI 07-10A, Revision 0.

11.4-24 Dose limits for individual members of the public, NRC Regulations Title 10, Code of Federal Regulations, 10 CFR Part 20.1301.

11.4-25 Preparation of Radiological Effluent Technical Specifications for Nuclear Power Plants, NUREG-0133.

11.4-26 Calculation of Annual Doses to Man from Routine Releases of Reactor Effluents for the Purpose of Evaluating Compliance with 10 CFR Part 50, Appendix I, Regulatory Guide 1.109, Rev. 1, October 1977.

11.4-27 Methods for Estimating Atmospheric Transport and Dispersion of Gaseous Effluents in Routine Releases from Light-Water-Cooled Reactors, Regulatory Guide 1.111, Rev. 1, July 1977.

11.4-28 Estimating Aquatic Dispersion of Effluents from Accidental and Routine Reactor Releases for the Purpose of Implementing Appendix I, Regulatory Guide 1.113, Rev. 1, April 1977.

11.4-29 ~~Deleted.~~ Contamination of Nonradioactive System and Resulting Potential for Unmonitored, Uncontrolled Release of Radioactivity to Environment, U.S. Nuclear Regulatory Commission, IE Bulletin No. 80-10, May 6, 1980.

11.4-30 U.S. Nuclear Regulatory Commission, Standard Review Plan for the Review of Safety Analysis Reports for Nuclear Power Plants, NUREG-0800.

11.4-31 Packaging and transportation of radioactive material, NRC Regulations Title 10, Code of Federal Regulations, 10 CFR Part 71.

11.4-32 American Society for Testing and Materials, "Standard Guide for Establishing Procedures to Quality and Certify Inspection Personnel for Coating Work Inspection in Nuclear Facilities, "ASTM D 4537-04a.

11.4-33 American Society for Testing and Materials, "Standard Guide for Establishing a Program for Condtion Condition Assessment of Coating Service Level I Coating Systems in Nuclear Power Plants,."11.4-32 ASTM D 5163-08.

11.4-34 Nuclear Regulatory Commission, Service Level I, II, and III Protective Coatings Applied to Nuclear Power Plants, Regulatory Guide 1.54, Rev. 1, July 2000.

Table 11.4-7 Typical Service Level II Concrete Systems Epoxy Coatings

Coatings	DFT	Specific Permeability	
		$g/m^2/mil/24hrs$	$g/m^2/mil/24hrs$
No. 5500 Kolor-poxy self leveling floor coating	40 mils	0.6	2.2
No. 3500 Kolor-poxy self-priming surf. Enamel	16 mils	2.7	10.5
No. 3200 Kolor-poxy white primer	9 mils	2.2	8.7
N-series Neothane Enamel	7 mils	18.0	70.9

Table 11.4-8 Component Classification

Component	Safety Classification
Spent Resin Storage Tank	RW IIa
Fillhead	RW IIc
Breakpot Tank	RW IIc
De-watering Vacuum pump	RW IIc
Sludge Pump	RW IIc

- Provide monitoring and sampling instruments to measure and record radiation levels and quantities of noble gases at all potential release points in accordance with the requirements of 10 CFR 50.34(f)(2)(xvii) (Ref. 11.5-4). Continuous monitoring and sampling of radioactive iodine and particulates in gaseous effluents from all potential accident release points are performed.

- Provide monitoring capability for in-plant radiation and airborne radioactivity for a broad range of routine and accident conditions in accordance with the requirements of 10 CFR 50.34(f)(2) (xvii) and 50.34(f)(2)(xxvii) (Ref. 11.5-4).

- Provide monitoring and sampling capabilities to assure plant systems operate as they are designed and installed in accordance with the requirements of 10 CFR 52.47(b)(1) (Ref. 11.5-9).

- Provide capabilities to detect, monitor, quantify, and identify leakage into the containment from the RCS in accordance with the requirements of RG 1.45 (Ref. 11.5-31) and ANSI N42.18-2004 (Ref. 11.5-11).

The process and effluent radiological monitoring and sampling system described herein is used for detailed design. The process and effluent radiological monitoring and sampling system is designed to meet the applicable requirements of ANSI N13.1-1999 (Ref. 11.5-10), ANSI N42.18-2004 (Ref. 11.5-11), RG 1.21 (Ref. 11.5-12), RG 1.33 (Ref. 11.5-17), RG 1.97 (Ref. 11.5-13), RG 4.15 (Ref. 11.5-14), NUREG-0718 (Ref. 11.5-32), NUREG-0800 BTP 7-10 and NUREG-0800 Appendix 11.5-A (Ref. 11.5-15).

11.5.2 System Descriptions

11.5.2.1 Process and Effluent Radiological Monitoring and Sampling System

The process and effluent radiological monitoring and sampling system is comprised of various distributed sets of radiation monitors each of which consists of sample collectors, detectors, and a radiation processor, with the exception of line monitors which have no sampling component. Each sample collector and the associated radiation detector, contained in one integral unit is shielded to minimize radiation from background and adjacent equipment. This design consideration is in conformance with the RG 1.45 requirement to minimize the effect of local ambient radiation. The ~~Radiation~~ radiation detectors send information to the radiation processors, which are used to determine the concentration of radioactive material in the monitored stream. The processor serves as the data collection center where data is received, processed, and stored. Additionally, the processor maintains a continuous display of the radiation levels for each monitored system and transmits alarm signals in the event that radiation levels exceed the predetermined setpoints. Data and alarm signals are transmitted to the MCR and made accessible to plant operators~~.~~ , in conformance with the requirements of RG 1.45.

The process and effluent radiological monitoring and sampling system measures, analyzes, and displays the radioactivity levels for the main process and effluent streams as described below.

- Liquid process streams that are radioactive or have the potential of becoming radioactive from cross-contamination
- Gaseous process streams that are radioactive or have the potential of becoming radioactive from cross-contamination
- Liquid effluent streams that are radioactive or have the potential of becoming radioactive from cross-contamination
- Gaseous effluent streams that are radioactive or have the potential of becoming radioactive from cross-contamination

The radiation monitors and samplers are summarized in the following tables:

- Table 11.5-1 Process Gas and Particulate Monitors
- Table 11.5-2 Process Liquid Monitors
- Table 11.5-3 Effluent Gas Monitors
- Table 11.5-4 Effluent Liquid Monitors
- Table 11.5-5 Samplers

The process configurations for the radiation monitors are schematically presented in Figures 11.5-1a through 11.5-1j. The locations of the monitors are identified in the general arrangement drawings in Figures 11.5-2a through 11.5-2k. The locations of the sampling points and stations are discussed in Chapter 9, Subsection 9.3.2. The locations of the sampling points are chosen to assure a representative sample in conformance with RG 1.45 and ANSI N42.18-2004.

The types of monitors and their ranges are listed in Tables 11.5-1 through 11.5-4. The ranges are based on expected operating ranges for this design and industrial experience. The setpoints for the trips and alarms associated with the monitors are based on specific detail design.

Descriptions of provisions for purging grab sample lines, representative sampling, and frequency of sampling are described in Chapter 9, Subsection 9.3.2. Sampling analytical results are used to calibrate the monitoring instrumentation for normal operation and AOOs. Sampling analytical results are used to assess the plant status during post-accident events.

11.5.2.2 Process Gas and Particulate Monitors Component Description

11.5.2.2.1 Containment Radiation Monitors (RMS-RE-041 and RMS-RE-040)

The two containment radiation monitors are a beta (β)-scintillation (RMS-RE-041) and a gamma (γ) (RMS-RE-040) monitor. The detection ranges and other details are summarized in Table 11.5-1, item numbers 1 and 2, respectively. The process configuration for these monitors is shown in Figure 11.5-1a. These monitors are in the R/B as shown in Figure 11.5-2h.

Monitors RMS-RE-041 and RMS-RE-040 comprise a set: RMS-RE-040 measuring the radiation level in the particulate and RMS-RE-041 measuring the radiation level in the gas stream from the containment atmosphere. A sample of the containment atmosphere is continuously drawn into the mixing chamber for monitoring and the sample is returned back to the containment by a sample blower. Detection of radiation above a predetermined setpoint activates an alarm in the MCR for operator actions and will automatically close the containment isolation valves on the containment purge ventilation system.

The containment radiation monitor used to detect leakage into the containment from the RCS has a range which is determined to have the capability of detecting less than 0.5 gpm leakage within one hour of response time. This determination is made by applying an activity balance based on the containment radioactivity concentration analysis and showing that this equation, as a function of time, represents an activity leak rate that is within the selected range for the monitor. This capability is met whether a realistic (as required by RG 1.45) or design basis primary coolant radioactive concentration is used.

A piping tap is provided for purging and cleaning of the monitors. The monitors are not safety-related.

The containment sampler is installed for the collection of iodine, particulate and tritium in the containment atmosphere. The detection ranges and other details are summarized in Table 11.5-5.

11.5.2.2.2 Containment Low Volume Purge Radiation Gas Monitor (RMS-RE-023)

The containment low volume purge radiation gas monitor is a β–scintillation monitor. The detection range and other details are summarized in Table 11.5-1, item number 3. The process configuration for this monitor is shown in Figure 11.5-1b. The monitor is located in the R/B as shown in Figure 11.5-2h.

This monitor is used to examine the radiation level in the containment air purges. During containment purges, an air sample of the airflow is continuously drawn into the mixing chamber for monitoring and the sample is returned back downstream of the duct via a small sample blower. If radiation is detected above the setpoint, an alarm is activated in the MCR for operator actions.

11.5-23 Methods for Estimating Atmospheric Transport and Dispersion of Gaseous Effluents in Routine Releases from Light-Water-Cooled Reactors. Regulatory Guide 1.111, Rev. 1,July 1977.

11.5-24 Estimating Aquatic Dispersion of Effluents from Accidental and Routine Reactor Releases for the Purpose of Implementing Appendix I. Regulatory Guide 1.113, Rev. 1, April 1977.

11.5-25 Deleted

11.5-26 Information Relevant to Ensuring that Occupational Radiation Exposures at Nuclear Power Stations Will Be as Low as Is Reasonably Achievable. Regulatory Guide 8.8.

11.5-27 Operating Philosophy for Maintaining Occupational Radiation Exposures as Low as Is Reasonably Achievable. Regulatory Guide 8.10, May 1977.

11.5-28 Occupational dose limits for adults. NRC Regulations Title 10 Code of Federal Regulations, 10 CFR Part 20.1201.

11.5-29 Compliance with requirements for summation of external and internal doses. NRC Regulations Title 10 Code of Federal Regulations, 10 CFR Part 20.1202.

11.5-30 NEI 07-09A, "Generic Template Guidance for Offsite Dose Calculation Manual Program Description," Revision 0.

11.5-31 ~~Reactor Coolant Pressure Boundary Leakage Detection Systems.~~ Guidance on Monitoring and Responding to Reactor Coolant System Leakage. Regulatory Guide 1.45, Revision 1,May ~~1973~~2008.

11.5-32 U.S. Nuclear Regulatory Commission, Licensing Requirements for Pending Applications for Construction Permits and Manufacturing Licenses, NUREG-0718.

11.5-33 Cost-Benefit Analysis for Radwaste Systems for Light-Water-Cooled Nuclear Power Reactors. Regulatory Guide 1.110, March 1976.

11.5-34 IEEE Standard Criteria for Safety Systems for Nuclear Power Generating Stations, IEEE Std 603-1991.

11.5-35 Electric Power Research Institute, "PWR Primary-to-Secondary Leak Guidelines," Rev 3, December 2004.

Chapter 12

Page	Location (e.g., subsection with paragraph/sentence/ Item, table with column/row, or figure)	Description of Change
12.1-8	12.1.4 COL 12.1(8)	Added a COL item as follows: “ COL 12.1(8) The COL applicant is responsible for the development of the operational procedures, following the guidance of RG 4.21 (Reference 12.1-27), for the operation and handling of all structure, system, and components (SSC) which could be potential sources of contamination within the plant. These procedures will be developed according to the objective of limiting leakage and the spread of contamination within the plant.” RAI No.534-4256 Revision 2
12.2-9	12.2.1.2.5 First, second and third paragraph	For clarity, the first paragraph of Subsection 12.2.1.2.5 was divided into three paragraphs corresponding to the discussions of the data in Tables 12.2-55, 12.2-56, and 12.2-57, respectively. RAI No.532-4019 Revision 1
12.2-9	12.2.1.2.5 First paragraph Last sentence	The following sentence is added at the end of the first paragraph. “The irradiation of the small amount of uranium contained in the fission chamber contributes to the source term of the incore detector; however, this fission product source term is insignificant with respect to the drive cable source term due to the long length of irradiated cable.” RAI No.532-4019 Revision 1
12.2-12	12.2.2 Last paragraph Third sentence.	Replace “… <u>occupancy time will be adjusted such</u> that <u>personal</u> doses are …” with “… <u>appropriate personnel protection equipment and radiological controls will be implemented to ensure</u> that <u>personnel</u> doses are …” RAI No.532-4019 Revision 1
12.2-13	12.2.3 COL 12.2(3) COL 12.2(4)	Added two COL item as follows: “ COL 12.2(3) The COL Applicant is to include the conduct of regular surveillance activities and provisions to maintain the dose rate at 2 meters from the surface of both the RWSAT and the PMWTs under 0.25 mrem/h in the Radiation Protection Program. COL 12.2(4) The COL Applicant is to implement a method of ensuring that the radioactivity concentration in both the RWSAT and the PMWTs remain under the specified concentration level described in the DCD.”. RAI No.532-4019 Revision 1

Page	Location (e.g., subsection with paragraph/sentence/ Item, table with column/row, or figure)	Description of Change
12.2-15	Table 12.2-1 (Sheet 1 of 6)	Add a new note to the density column as follows: “Gamma shielding calculations utilize a point kernel method, as described in Subsection 12.3.2.3. This method requires the use of a single mixed density for modeling complex geometries, such as the shell side of a heat exchanger. The shell side density values provided here are based on a weighted combination of the individual densities of the component cooling water outside the U-tubes, the stainless steel of the U-tubes, and the source water inside the tubes.” RAI No.532-4019 Revision 1
12.2-16	Table 12.2-1 (Sheet 2 of 6)	Add a new note to the density column as follows: “Gamma shielding calculations utilize a point kernel method, as described in Subsection 12.3.2.3. This method requires the use of a single mixed density for modeling complex geometries, such as the shell side of a heat exchanger. The shell side density values provided here are based on a weighted combination of the individual densities of the component cooling water outside the U-tubes, the stainless steel of the U-tubes, and the source water inside the tubes.” RAI No.532-4019 Revision 1
12.2-18	Table 12.2-1 (Sheet 4 of 6) 2nd column, 5th row	Replaced “236.2” with “196.9”. RAI No.523-4246 Revision 2
12.2-18	Table 12.2-1 (Sheet 4 of 6) 3rd column, 5th row	Replaced “536.6” with “446.3”. RAI No.523-4246 Revision 2
12.2-69	Table 12.2-50	Change the values of the activity and the source strength. RAI No.523-4246 Revision 2
12.2-82	Table 12.2-60 (Sheet 1 of 3)	Add a new note to the value of “Purge flow duration” column as follows: “Assumed as a constant removal term for the calculation of the equilibrium airborne radioactive concentration, but the normally closed low volume purge valve is only operated intermittently, as needed, to ensure acceptable personnel containment entry conditions.”. RAI No.532-4019 Revision 1
12.2-86	Table 12.2-61 (Sheet 2 of 6)	Change the values of the activity. RAI No.532-4019 Revision 1

Page	Location (e.g., subsection with paragraph/sentence/ Item, table with column/row, or figure)	Description of Change
12.2-87	Table 12.2-61 (Sheet 3 of 6)	Change the values of the activity. RAI No.532-4019 Revision 1
12.2-99	Table 12.2-71	DCD Table 12.2-71 is revised to include the mass of U-235. RAI No.532-4019 Revision 1
12.2-100	Table 12.2-72	Change the value of the specific activity. RAI No.532-4019 Revision 1
12.3-3	12.3.1.1.1.2.E 1st paragraph Last sentence	The following sentence is added at the end of the first paragraph. “Tanks containing radioactive particulate material shall have smooth welds and mixing, flushing and cleaning capabilities to prevent retention of the radioactive particulate material.” RAI No.524-4020 Revision
12.3-5	12.3.1.1.1.2.H 7th paragraph Last sentence	The following sentence is added at the end of the seventh paragraph. “The design of valves located in the piping carrying radioactive fluids or gases include hermetically sealed (packless) valves, live-loaded packing and graphite packing materials to reduce the potential for fluids or gases leakage.” RAI No.524-4020 Revision 1
12.3-6	12.3.1.1.1.2.I 1st paragraph Last sentence	The following sentence is added at the end of the first paragraph. “Provisions are made in radioactive systems for flushing the piping with sufficient water to reduce crud buildup. Welds are made smooth to prevent crud traps from forming.” RAI No.524-4020 Revision 1
12.3-35	12.3.6 COL 12.3(9)	Added a COL item as follows: “COL 12.3(9) In order to ensure that the B.A. evaporator room does not become a VHRA during the end of cycle, the COL Applicant is to stipulate a need for routine surveillance in the Radiation Protection Program. In the event that the routine surveillance shows an increase in dose level, the COL Applicant must provide an appropriate strategy to sufficiently reduce the dose rate below the criteria for a VHRA.” RAI No.532-4019 Revision 1

In addition, the COL Applicant is to provide the operational radiation protection program for ensuring that occupational radiation exposures are ALARA. This program is to be developed, implemented and maintained as described in the Nuclear Energy Institute Technical Report, NEI 07-03A (Reference 12.1-25), including compliance with the relevant quality assurance guidance provided in RG 1.33 (Reference 12.1-26). The specific CFR criteria referenced in NEI 07-03A shall be met and strictly adhered to. All recommendations and guidance referenced in NEI 07-03A are to be addressed and implemented as applicable to the US-APWR and the plant site.

Operational procedures will be developed, following the guidance of RG 4.21 (Reference 12.1-27), for the operation and handling of all structure, system, and components (SSC) which could be potential sources of contamination within the plant. These procedures will be developed according to the objective of limiting leakage and the spread of contamination within the plant. See Subsection 12.1.4 for COL information.

12.1.4 Combined License Information

COL 12.1 (1) The COL Applicant is to demonstrate that the policy considerations regarding plant operations are compliance with RG 1.8, 8.8 and 8.10 (Subsection 12.1.1.3).

COL 12.1 (2) Deleted.

COL 12.1 (3) The COL Applicant is to describe how the plant follows the guidance of RG 8.2, 8.4, 8.6, 8.7, 8.9, 8.13, 8.15, 8.25, 8.27, 8.28, 8.29, 8.34, 8.35, 8.36 and 8.38.

COL 12.1 (4) Deleted.

COL 12.1 (5) The COL Applicant is to provide the operational radiation protection program for ensuring that occupational radiation exposures are ALARA.

COL 12.1 (6) The COL applicant is to perform periodic review of operational practices to ensure configuration management, personnel training and qualification update, and procedure adherence.

COL 12.1 (7) The COL applicant is to track implementation of requirements for record retention according to 10 CFR 50.75(g) and 10 CFR 70.25(g) as applicable.

COL 12.1(8) The COL applicant is responsible for the development of the operational procedures, following the guidance of RG 4.21 (Reference 12.1-27), for the operation and handling of all structure, system, and components (SSC) which could be potential sources of contamination within the plant. These procedures will be developed according to the objective of limiting leakage and the spread of contamination within the plant.

12.2.1.2.3 Spent Fuel

The predominant radioactivity sources in the spent fuel storage and transfer areas in the Reactor Building (R/B) are the spent fuel assemblies. The source strengths employed to determine the minimum water depth above spent fuel and shielding walls around the SFP, as well as shielding of the spent fuel transfer tube, are tabulated in Table 12.2-54. For the shielding design, the SFP is assumed to contain the design maximum number of fuel assemblies. To be conservative, 257 spent fuel assemblies, assumed to be from unloading the full core with only a 24-hour decay period, are assumed to be located in the outer rows of the spent fuel racks. The remaining assemblies, from previous refueling operations, do not significantly affect the shield wall design due to the shielding of the intervening, recently discharged assemblies.

The source strengths in Table 12.2-54 are also used in the evaluation of radiation levels for spent fuel handling, storage, and shipping. These sources are calculated using the ORIGEN code, based on specific power of 32.1 MW/MTU and burnup of 62 GWD/MTU, which is a limitation for maximum burnup for fuel rod as described in Chapter 4, Subsection 4.2.1. Other calculation parameters are tabulated in Table 12.2-70.

12.2.1.2.4 Control Rods, Primary and Secondary Source Rods

As source material, byproduct material or special nuclear material, there are primary and secondary source rods. As described in Chapter 4, Subsection 4.2.2.3 and 4.2.2.3.3, a primary source rod contains californium-252 source, a secondary source rod contains antimony-beryllium source. These rods are stored in the SFP after use. Irradiated control rods are also stored in the SFP. Source strengths of these rods are less than that of spent fuel. Therefore, in radiation shielding design, source strengths of spent fuel are used as these rods' source strengths.

12.2.1.2.5 Incore Flux Thimbles

Irradiated incore detector and drive cable maximum gamma ray source strengths are tabulated in Table 12.2-55. These source strengths are used in determining shielding requirements and evaluating occupational radiation exposure when detectors are being moved during or following a flux mapping of the reactor core. These source strengths are given an irradiation period of 20 hours, respectively, and are given in terms of per cubic centimeters (cm^3) of detector and per centimeters of drive cable. The irradiation of the small amount of uranium contained in the fission chamber contributes to the source term of the incore detector; however, this fission product source term is insignificant with respect to the drive cable source term due to the long length of irradiated cable.

Irradiated incore detector drive cable average gamma ray source strengths are tabulated in Table 12.2-56. These source strengths are used in determining shielding requirements when the detectors are not in use and for shipment when the detectors have failed. The values are given in terms of per centimeters of drive cable after an irradiation period of 20 hours.

The detailed listing of the expected airborne isotopic concentrations in all the various plant regions is presented in Table 12.2-61. The final design of the plant ensures that all the expected airborne isotopic concentrations in all normally occupied areas are well below the derived air concentration (10 CFR 20 Appendix B [Reference 12.2-5]). If entry is needed in areas where airborne concentrations exceed the limit (such as containment during normal operation), ~~occupancy time will be adjusted~~ appropriate personnel protection equipment and radiological controls will be implemented to ensure ~~such~~ that ~~personal~~ personnel doses are in compliance with 10 CFR 20 (Reference 12.2-1).

12.2.2.1 Containment Vessel Atmosphere

The detailed listing of the expected airborne isotopic concentrations in the containment vessel atmosphere is presented in Table 12.2-61.

12.2.2.2 Reactor Building Atmosphere

The detailed listing of the expected airborne isotopic concentrations in the R/B atmosphere is presented in Table 12.2-61.

12.2.2.3 Fuel-Handling Area Atmosphere

The detailed listing of the expected airborne isotopic concentrations in the fuel handling area atmosphere is presented in Table 12.2-61.

12.2.2.4 Auxiliary Building Atmosphere

The detailed listing of the expected airborne isotopic concentrations in the A/B is presented in Table 12.2-61.

12.2.2.5 Airborne Radioactivity Model

For those regions characterized by a constant leak rate of the radioactive source at constant source strength and a constant exhaust rate of the region, the peak or equilibrium airborne concentration of the radioisotope in the regions is calculated using the following equation:

$$C_i(t) = \frac{(LR)_i A_i (PF)_i [1 - \exp(-\lambda_{Ti} t)]}{V \lambda_{Ti}} \qquad \text{Eq. 12.2-1}$$

where:

$(LR)_i$ = Leak or evaporation rate of the ith radioisotope in the applicable region (g/s)

A_i	=	Radioactivity concentration of the ith leaking or evaporating radioisotope (μCi/g)
$(PF)_i$	=	Partition factor or the fraction of the leaking radioactivity that is airborne for the ith radioisotope
λ_{Ti}	=	Total removal rate constant for the ith radioisotope from the applicable region (1/s)
λ_{Ti}	=	$\lambda_{di} + \lambda_e$, the removal rate constants in 1/s due to radioactive decay for the ith radioisotope and the exhaust from the applicable region, respectively
t	=	Time elapsed from the start of the leak and the time at which the concentration is evaluated (s)
V	=	Free volume of the region in which the leak occurs (cm^3)
$C_i(t)$	=	Airborne concentration of the ith radioisotope at time t in the applicable region ($\mu Ci/cm^3$)

From the above equation, it is evident that the peak or equilibrium concentration, C_i, of the ith radioisotope in the applicable region will be given by the following expression:

$$C_i(t) = \frac{(LR)_i A_i (PF)_i}{V \lambda_{Ti}} \qquad \text{Eq. 12.2-2}$$

With high exhaust rates, this peak concentration will be reached within a few hours.

12.2.2.6 Sources Resulting from Design-Basis Accidents

The radiation sources from DBAs include the design basis inventory of radioactive isotopes in the reactor coolant, plus the postulated fission product released from the fuel. DBA parameters and sources are discussed and evaluated in Chapter 15, Subsection 15.6.5.5.

12.2.3 Combined License Information

COL 12.2(1) The COL Applicant is to list any additional contained radiation sources that are not identified in Subsection 12.2.1, including radiation sources used for instrument calibration or radiography.

COL 12.2(2) The COL Applicant is to address the radiation protection aspects associated with additional storage space for radwaste and/or additional radwaste facilities for dry active waste.

COL 12.2(3) The COL Applicant is to include the conduct of regular surveillance activities and provisions to maintain the dose rate at 2 meters from the surface of both the RWSAT and the PMWTs under 0.25 mrem/h in the

Radiation Protection Program.

COL 12.2(4) The COL Applicant is to implement a method of ensuring that the radioactivity concentration in both the RWSAT and the PMWTs remain under the specified concentration level described in the DCD.

12.2.4 References

12.2-1 "Standards for Protection Against Radiation," Energy. Title 10, Code of Federal Regulations, Part 20, U.S. Nuclear Regulatory Commission, Washington, DC, May 1991.

12.2-2 Information Relevant to Ensuring that Occupational Radiation Exposures at Nuclear Power Stations Will Be as Low as Is Reasonably Achievable. RG 8.8, Rev. 3, U.S. Nuclear Regulatory Commission, Washington, DC, June 1978.

12.2-3 Operating Philosophy for Maintaining Occupational Radiation Exposures as Low as Is Reasonably Achievable. RG 8.10, Rev. 1-R, U.S. Nuclear Regulatory Commission, Washington, DC, May 1977.

12.2-4 Alternative Radiological Source Terms for Evaluating Design Basis Accidents at Nuclear Power Reactors. RG 1.183, Rev. 0, U.S. Nuclear Regulatory Commission, Washington, DC, July 2000.

12.2-5 "Annual Limits on Intake (ALIs) and Derived Air Concentrations (DACs) of Radionuclides for Occupational Exposure; Effluent Concentrations; Concentrations for Release to Sewerage," Energy. Title 10, Code of Federal Regulations, Part 20, Appendix B, U.S. Nuclear Regulatory Commission, Washington, DC.

12.2-6 "Environmental Radiation Protection Standards for Nuclear Power Operations," Protection of Environment. Title 40, Code of Federal Regulations, Part 190, U.S. Environmental Protection Agency, Washington DC, January 1977.

Table 12.2-1 Radiation Sources Parameters (Sheet 1 of 6)

Components	Assumed Shielding Sources						
	Source Approximate Geometry as Cylinder Volume		Source Characteristics				Quantity
	Radius (in.)	Length (in.)	Type	Material	Density** (lb/ft^3)	Equipment Self-Shielding (in.)	
Inside the containment vessel							
Steam generator Plenum Side Shell Side	66.9 65.9	63.0 434.2	Homogeneous Homogeneous	Source Water Source Water 22 wt%+ Secondary Water 9wt%+ Steel 69wt%	~~41.6~~44.5 69.2	6.1 3.4	4
Regenerative heat exchanger * Plenum Side Shell Side	8.3	23.2 ~~140.2~~132.4	Homogenous Homogenous	Water (Charging Line) Water (Letdown Line) ~~35~~26 wt%+ Water (Charging Line) 6 wt%+ Steel ~~59~~68 wt%	62.4 ~~129.2~~121.5	2.0	3
Letdown heat exchanger Plenum Side Shell Side	~~17.7~~16.7	24.4 189.8	Homogenous Homogenous	Source Water Source Water ~~11~~13 wt%+ Cooling water ~~61~~57 wt%+ Steel ~~28~~31 wt%	62.4 ~~82.5~~85.2	ignored	1
Excess letdown heat exchanger Plenum Side Shell Side	~~6.9~~5.9	21.7 130.2	Homogenous Homogenous	Source Water Source Water 5 wt%+ Cooling water ~~63~~54 wt%+ Steel ~~32~~41wt%	62.4 ~~86.9~~96.7	1.8 ignored	1

* The regenerative heat exchanger consists of three shells.

** Gamma shielding calculations utilize a point kernel method, as described in Subsection 12.3.2.3. This method requires the use of a single mixed density for modeling complex geometries, such as the shell side of a heat exchanger. The shell side density values provided here are based on a weighted combination of the individual densities of the component cooling water outside the U-tubes, the stainless steel of the U-tubes, and the source water inside the tubes.

Table 12.2-1 Radiation Sources Parameters (Sheet 2 of 6)

Components	Assumed Shielding Sources						
	Source Approximate Geometry as Cylinder Volume		Source Characteristics				Quantity
	Radius (in.)	Length (in.)	Type	Material	Density* (lb/ft^3)	Equipment Self-Shielding (in.)	
Outside the containment vessel (Reactor Building)							
Containment spray/residual heat removal heat exchanger Plenum Side Shell Side	31.5	 56.7 264.4	 Homogenous Homogenous	 Source Water Source Water 15 wt%+ Cooling water 48 wt%+ Steel 37 wt%	 62.4 ~~91.8~~92.2	 1.8 1.2	4
Seal water heat exchanger Plenum Side Shell Side	8.4	 22.3 144.6	 Homogenous Homogenous	 Source Water Source Water 10 wt%+ Cooling water ~~49~~48 wt%+ Steel ~~41~~42 wt%	 62.4 ~~97.6~~98.2	ignored	1
Volume control tank Liquid Phase Vapor Phase	47.2	179.2 107.5 71.7	 Homogenous Homogenous	 Air Water	 7.6E-02 62.4	ignored	1

* Gamma shielding calculations utilize a point kernel method, as described in Subsection 12.3.2.3. This method requires the use of a single mixed density for modeling complex geometries, such as the shell side of a heat exchanger. The shell side density values provided here are based on a weighted combination of the individual densities of the component cooling water outside the U-tubes, the stainless steel of the U-tubes, and the source water inside the tubes.

Table 12.2-1 Radiation Sources Parameters (Sheet 4of 6)

Components	Assumed Shielding Sources						
	Source Approximate Geometry as Cylinder Volume		Source Characteristics				Quantity
	Radius (in.)	Length (in.)	Type	Material	Density (lb/ft^3)	Equipment Self-Shielding (in.)	
Plant Yard Area (Outside the Power Block)							
Refueling water storage auxiliary tank	~~236.2~~196.9	~~536.6~~446.3	Homogeneous	Water	62.4	ignored	1
Primary makeup water tank	183.1	316.9	Homogeneous	Water	62.4	ignored	2

Table 12.2-50 Miscellaneous Sources – Refueling Water Storage Auxiliary Tank

Refueling Water Storage Auxiliary Tank activity	
Nuclide	Activity ($\mu Ci/cm^3$)
Co-60	~~1.8E-04~~2.0E-04
Refueling Water Storage Auxiliary Tank source strength	
Gamma Ray Energy (MeV)	Source Strength ($MeV/cm^3/sec$)
0.015	~~1.1E-05~~1.2E-05
0.3	~~1.6E-04~~1.7E-04
0.8	~~4.2E-04~~4.5E-04
1.0	~~6.8E+00~~7.5E+00
1.5	~~1.0E+01~~1.1E+01
2.0	~~1.5E-04~~1.6E-04
3.0	~~7.4E-07~~8.1E-07

Table 12.2-60 Parameters and Assumptions for Calculating Airborne Radioactive Concentrations (Containment) (Sheet 1 of 3)

Parameter/ Assumption	Value
Reactor coolant leakage rate in normal operation	100 lb/d
Reactor coolant evaporation rate in refueling	1020 lb/h
Fraction of radioactive material to free volume	(in normal operation) 1.0(for noble gas) 0.45(others) (in refueling/shutdown) 1.0(for noble gas & tritium) 0.1(iodine~~&tritium~~) 0.001(others)
Fuel defect	1%
Reactor coolant specific activity in normal operation (except tritium)	Table 11.1-2
Reactor cavity and SFP water specific activity in refueling /shutdown (except tritium)	Table 12.2-72
Reactor coolant tritium specific activity	3.5μCi/g
Reactor cavity and SFP water tritium specific activity in refueling /shutdown	~~3.5~~0.35μCi/g
Low volume purge flow rate	(in normal operation) 2000 cfm
High volume purge flow rate	(in refueling) 30000 cfm
Purge flow duration	Continuous*

* Assumed as a constant removal term for the calculation of the equilibrium airborne radioactive concentration, but the normally closed low volume purge valve is only operated intermittently, as needed, to ensure acceptable personnel containment entry conditions.

Table 12.2-61 Airborne Radioactive Concentrations (Containment in refueling/shutdown) (Sheet 2 of 6)

Nuclide	Activity (μCi/cm^3)	10CFR20 DAC (μCi/cm^3)	Nuclide	Activity (μCi/cm^3)	10CFR20 DAC (μCi/cm^3)
Kr-83m	1.8E-11~~1.4E-11~~	1E-02	Ru-106	-	5E-09
Kr-85m	3.6E-10~~1.1E-10~~	2E-05	Ag-110m	-	4E-08
Kr-85	4.9E-06~~2.6E-06~~	1E-04	Te-125m	-	2E-07
Kr-87	4.0E-15~~7.1E-16~~	5E-06	Te-127m	-	1E-07
Kr-88	4.8E-11~~1.2E-11~~	2E-06	Te-127	9.1E-13~~7.8E-13~~	7E-06
Xe-131m	3.4E-07~~2.2E-07~~	4E-04	Sb-129	-	4E-06
Xe-133m	2.4E-07~~1.4E-07~~	1E-04	Te-129m	1.5E-15~~1.4E-16~~	1E-07
Xe-133	2.4E-05~~1.6E-05~~	1E-04	Te-129	-	3E-05
Xe-135m	2.1E-09~~2.0E-09~~	9E-06	Sb-131	-	1E-05
Xe-135	1.4E-07~~9.4E-08~~	1E-05	Te-131m	2.3E-15~~2.2E-16~~	2E-07
Xe-138	-	4E-06	Te-131	-	2E-06
I-130	1.5E-12~~1.5E-13~~	3E-07	Te-132	3.5E-14~~3.4E-15~~	9E-08
I-131	3.6E-11~~3.4E-12~~	2E-08	Cs-132	3.0E-15~~9.2E-16~~	2E-06
I-132	4.9E-10~~4.2E-10~~	3E-06	Te-133m	-	2E-06
I-133	3.0E-11~~2.9E-12~~	1E-07	Te-133	-	9E-06
I-134	-	2E-05	Cs-134	2.7E-12~~8.4E-13~~	4E-08
I-135	3.5E-12~~3.4E-13~~	7E-07	Te-134	-	1E-05
Br-82	1.3E-15~~1.3E-16~~	2E-06	Cs-135m	-	8E-05
Br-83	-	3E-05	Cs-135	-	5E-07
Br-84	-	2E-05	Cs-136	6.9E-13~~2.1E-13~~	3E-07
Rb-86	2.6E-14~~8.0E-15~~	3E-07	Cs-137	1.6E-12~~4.8E-13~~	6E-08
Rb-87	-	6E-07	Cs-138	-	2E-05
Rb-88	5.3E-14~~1.3E-14~~	3E-05	Ba-140	-	6E-07
Rb-89	-	6E-05	La-140	4.0E-14~~3.3E-14~~	5E-07
Sr-89	-	6E-08	La-141	-	4E-06
Sr-90	-	2E-09	Ce-141	-	2E-07
Y-90	5.4E-14~~4.4E-14~~	3E-07	Ce-143	-	7E-07
Sr-91	-	1E-06	Pr-143	1.2E-15~~9.5E-16~~	3E-07
Y-91m	1.6E-15~~1.5E-15~~	7E-05	Ce-144	-	6E-09
Y-91	-	5E-08	Pr-144	1.4E-12~~1.5E-12~~	5E-05
Sr-92	-	3E-06	Pm-147	-	5E-08
Y-92	-	3E-06	Sm-147	-	2E-11
Y-93	-	1E-06	Eu-154	-	8E-09
Zr-93	-	3E-09	Na-24	3.2E-15~~3.2E-16~~	2E-06
Zr-95	-	5E-08	Cr-51	-	8E-06
Nb-95m	-	9E-07	Mn-54	-	3E-07
Nb-95	1.7E-15~~1.3E-15~~	5E-07	Mn-56	-	6E-06
Mo-99	8.7E-14~~8.6E-15~~	6E-07	Fe-55	-	8E-07
Tc-99m	6.6E-12~~5.7E-12~~	6E-05	Fe-59	-	1E-07
Tc-99	-	3E-07	Co-58	1.5E-15~~1.5E-16~~	3E-07
Mo-101	-	6E-05	Co-60	-	1E-08
Tc-101	-	1E-04	Zn-65	-	1E-07
Ru-103	-	3E-07	H-3	3.2E-06	2E-05
Rh-103m	2.1E-13	5E-04			

Table 12.2-61 Airborne Radioactive Concentrations (Fuel Handling Area) (Sheet 3 of 6)

Nuclide	Activity (μCi/cm^3)	10CFR20 DAC (μCi/cm^3)	Nuclide	Activity (μCi/cm^3)	10CFR20 DAC (μCi/cm^3)
Kr-83m	1.6E-11~~1.3E-11~~	1E-02	Ru-106	-	5E-09
Kr-85m	3.3E-10~~1.0E-10~~	2E-05	Ag-110m	-	4E-08
Kr-85	4.5E-06~~2.4E-06~~	1E-04	Te-125m	-	2E-07
Kr-87	3.7E-15~~6.5E-16~~	5E-06	Te-127m	-	1E-07
Kr-88	4.4E-11~~1.1E-11~~	2E-06	Te-127	8.4E-13~~7.2E-13~~	7E-06
Xe-131m	3.2E-07~~2.0E-07~~	4E-04	Sb-129	-	4E-06
Xe-133m	2.2E-07~~1.3E-07~~	1E-04	Te-129m	1.3E-15~~1.3E-16~~	1E-07
Xe-133	2.2E-05~~1.4E-05~~	1E-04	Te-129	-	3E-05
Xe-135m	1.9E-09	9E-06	Sb-131	-	1E-05
Xe-135	1.3E-07~~8.6E-08~~	1E-05	Te-131m	2.1E-15~~2.0E-16~~	2E-07
Xe-138	-	4E-06	Te-131	-	2E-06
I-130	1.4E-12~~1.3E-13~~	3E-07	Te-132	3.2E-14~~3.1E-15~~	9E-08
I-131	3.3E-11~~3.1E-12~~	2E-08	Cs-132	2.8E-15~~8.4E-16~~	2E-06
I-132	4.5E-10~~3.8E-10~~	3E-06	Te-133m	-	2E-06
I-133	2.8E-11~~2.7E-12~~	1E-07	Te-133	-	9E-06
I-134	-	2E-05	Cs-134	2.5E-12~~7.7E-13~~	4E-08
I-135	3.3E-12~~3.1E-13~~	7E-07	Te-134	-	1E-05
Br-82	1.2E-15~~1.2E-16~~	2E-06	Cs-135m	-	8E-05
Br-83	-	3E-05	Cs-135	-	5E-07
Br-84	-	2E-05	Cs-136	6.3E-13~~1.9E-13~~	3E-07
Rb-86	2.4E-14~~7.3E-15~~	3E-07	Cs-137	1.4E-12~~4.4E-13~~	6E-08
Rb-87	-	6E-07	Cs-138	-	2E-05
Rb-88	4.9E-14~~1.2E-14~~	3E-05	Ba-140	-	6E-07
Rb-89	-	6E-05	La-140	3.6E-14~~3.0E-14~~	5E-07
Sr-89	-	6E-08	La-141	-	4E-06
Sr-90	-	2E-09	Ce-141	-	2E-07
Y-90	4.9E-14~~4.1E-14~~	3E-07	Ce-143	-	7E-07
Sr-91	-	1E-06	Pr-143	1.1E-15~~8.8E-16~~	3E-07
Y-91m	1.5E-15~~1.4E-15~~	7E-05	Ce-144	-	6E-09
Y-91	-	5E-08	Pr-144	1.3E-12~~1.4E-12~~	5E-05
Sr-92	-	3E-06	Pm-147	-	5E-08
Y-92	-	3E-06	Sm-147	-	2E-11
Y-93	-	1E-06	Eu-154	-	8E-09
Zr-93	-	3E-09	Na-24	3.0E-15~~2.9E-16~~	2E-06
Zr-95	-	5E-08	Cr-51	-	8E-06
Nb-95m	-	9E-07	Mn-54	-	3E-07
Nb-95	1.6E-15~~1.2E-15~~	5E-07	Mn-56	-	6E-06
Mo-99	8.0E-14~~7.9E-15~~	6E-07	Fe-55	-	8E-07
Tc-99m	6.0E-12~~5.2E-12~~	6E-05	Fe-59	-	1E-07
Tc-99	-	3E-07	Co-58	1.4E-15~~1.4E-16~~	3E-07
Mo-101	-	6E-05	Co-60	-	1E-08
Tc-101	-	1E-04	Zn-65	-	1E-07
Ru-103	-	3E-07	H-3	2.9E-06	2E-05
Rh-103m	2.0E-13~~1.9E-13~~	5E-04			

Table 12.2-70 Parameters and Assumptions for Calculating Spent Fuel Source Strength

Parameter / Assumption	Value
Burn up	62 GWd/MTU
Core thermal output	4451 MWt
Number of fuel assemblies	257
Specific power	32.1 MW/MTU
Fuel enrichment	4.55 wt%
Effective fuel length and width	420cm x 21.4cm x 21.4cm

Table 12.2-71 Parameters and Assumptions for Calculating Irradiated Incore Detector, Drive Cable and Flux Thimble Source Strength

Parameter / Assumption	Value				
	Detector		Drive Cable		Flux Thimble
	Fission Chamber	Fe-Ni cover			
Chemical composition *1 (%)	-*4	Fe: 49 Cr: - Ni: 50 Mn: 0.7 Co: 0.03 P: - S: - Si: 0.19 Mo: -	Fe: 65 Cr: 19 Ni: 13 Mn: 2.0 Co: 0.2 P: 0.04 S: 0.03 Si: 1.0 Mo: -	Fe: 98 Cr: 0.15 Ni: 0.7 Mn: 0.6 Co: 0.02 P: 0.04 S: 0.04 Si: 0.35 Mo: 0.6	Fe: 66 Cr: 18 Ni: 14 Mn: 2.0 Co: 0.1 P: - S: - Si: - Mo: -
Density (g/cm^3)	-*4	7.85	7.9	7.85	7.98
Mixing ratio *2	-*4	1.0	0.1	0.9	1.0
Neutron flux *3 ($n/cm^2/s$)	ϕ_1: 8.5E+13 ϕ_2: 1.4E+14 ϕ_3: 9.5E+13 ϕ_4: 6.0E+13		ϕ_1: 8.5E+13 ϕ_2: 1.4E+14 ϕ_3: 9.5E+13 ϕ_4: 6.0E+13	ϕ_1: 8.5E+13 ϕ_2: 1.4E+14 ϕ_3: 9.5E+13 ϕ_4: 6.0E+13	ϕ_1: 8.2E+13 ϕ_2: 1.4E+14 ϕ_3: 9.3E+13 ϕ_4: 5.8E+13
Irradiation period	20 (h)		20 (h)	20 (h)	60 (y)

*1) For chemical composition, a "-" after an element indicates "essentially zero".
*2) Drive cable consists of two materials. Source strength for drive cable was calculated by summing source strength for each material with this mixing ratio.
*3) Subscripts for neutron flux indicate range of neutron energy. (1: E > 1MeV, 2: 5.53 keV < E < 1 MeV, 3: 0.414 eV < E < 5.53 keV, 4: E < 0.414 eV)
*4) The mass of U-235 in Fission Chamber is 1.6 (mg)

Table 12.2-72 Reactor cavity and SFP water specific activity in refueling /shutdown (except tritium)

Nuclide	Specific Activity (μCi/g)	Nuclide	Specific Activity (μCi/g)
Kr-83m	1.9E-06~~1.6E-06~~	Ru-106	3.0E-09~~2.9E-10~~
Kr-85m	4.0E-05~~1.2E-05~~	Ag-110m	2.7E-11~~2.7E-12~~
Kr-85	5.4E-01~~2.9E-01~~	Te-125m	1.2E-08~~1.2E-09~~
Kr-87	4.4E-10~~7.8E-11~~	Te-127m	4.8E-08~~4.7E-09~~
Kr-88	5.2E-06~~1.3E-06~~	Te-127	1.0E-04~~8.6E-05~~
Xe-131m	3.8E-02~~2.4E-02~~	Sb-129	1.7E-11~~1.7E-12~~
Xe-133m	2.6E-02~~1.6E-02~~	Te-129m	1.6E-07~~1.6E-08~~
Xe-133	2.7E+00~~1.7E+00~~	Te-129	5.9E-10~~5.4E-10~~
Xe-135m	2.3E-04~~2.2E-04~~	Sb-131	-
Xe-135	1.6E-02~~1.0E-02~~	Te-131m	2.5E-07~~2.4E-08~~
Xe-138	-	Te-131	-
I-130	1.7E-06~~1.6E-07~~	Te-132	3.8E-06~~3.8E-07~~
I-131	3.9E-05~~3.8E-06~~	Cs-132	3.3E-07~~1.0E-07~~
I-132	5.4E-04~~4.6E-04~~	Te-133m	6.7E-15~~6.7E-16~~
I-133	3.3E-05~~3.2E-06~~	Te-133	2.7E-14
I-134	1.1E-13~~1.3E-14~~	Cs-134	3.0E-04~~9.3E-05~~
I-135	3.9E-06~~3.8E-07~~	Te-134	3.5E-17~~3.4E-18~~
Br-82	1.4E-07~~1.4E-08~~	Cs-135m	2.4E-14~~7.2E-15~~
Br-83	2.0E-09~~1.9E-10~~	Cs-135	8.1E-10~~2.5E-10~~
Br-84	-	Cs-136	7.6E-05~~2.3E-05~~
Rb-86	2.9E-06~~8.8E-07~~	Cs-137	1.7E-04~~5.3E-05~~
Rb-87	3.7E-14~~1.1E-14~~	Cs-138	2.0E-17~~6.2E-18~~
Rb-88	5.8E-06~~1.5E-06~~	Ba-140	6.1E-08~~6.0E-09~~
Rb-89	-	La-140	4.4E-06~~3.6E-06~~
Sr-89	5.2E-08~~5.2E-09~~	La-141	6.3E-11~~6.2E-12~~
Sr-90	3.4E-09~~3.4E-10~~	Ce-141	9.7E-09~~9.6E-10~~
Y-90	5.9E-06~~4.9E-06~~	Ce-143	5.0E-09~~5.0E-10~~
Sr-91	6.1E-09~~6.0E-10~~	Pr-143	1.3E-07~~1.0E-07~~
Y-91m	1.8E-07~~1.7E-07~~	Ce-144	7.4E-09~~7.3E-10~~
Y-91	9.2E-09~~1.4E-09~~	Pr-144	1.6E-04
Sr-92	4.3E-11~~4.2E-12~~	Pm-147	8.3E-10~~8.2E-11~~
Y-92	1.7E-09~~9.4E-10~~	Sm-147	9.2E-20~~6.8E-20~~
Y-93	1.3E-09~~1.3E-10~~	Eu-154	7.8E-11~~7.6E-12~~
Zr-93	1.4E-14~~1.3E-15~~	Na-24	3.6E-07~~3.5E-08~~
Zr-95	1.0E-08~~9.9E-10~~	Cr-51	1.0E-07~~1.0E-08~~
Nb-95m	1.2E-08~~9.7E-09~~	Mn-54	7.2E-08~~7.1E-09~~
Nb-95	1.9E-07~~1.5E-07~~	Mn-56	5.7E-09~~5.6E-10~~
Mo-99	9.6E-06~~9.5E-07~~	Fe-55	6.9E-08~~6.8E-09~~
Tc-99m	7.2E-04~~6.2E-04~~	Fe-59	1.2E-08~~1.2E-09~~
Tc-99	3.9E-12~~3.0E-12~~	Co-58	1.7E-07~~1.6E-08~~
Mo-101	-	Co-60	2.5E-08~~2.4E-09~~
Tc-101	-	Zn-65	2.0E-08~~2.0E-09~~
Ru-103	8.3E-09~~8.2E-10~~		
Rh-103m	2.3E-05		

Back-flushable filters are designed so that the filter internals may be remotely removed and placed in a shielded cask for offsite shipping and disposal, in the unlikely event that a filter loses its back-flush capability.

Liquid systems containing radioactive cartridge filters are provided with a remote filter handling system for the removal of spent radioactive filter cartridges from their housings and for their transfer to the drumming station for packaging and shipment for burial. The process is accomplished so that exposure to personnel and the possibility of an inadvertent radioactive release to the environment are minimized. Each filter is contained in a shielded compartment and provided with vent and drain valving, and individual compartments have drainage capabilities. The filter handling system has also been designed with a minimum of components susceptible to malfunction.

B. Demineralizers

Demineralizers for highly radioactive systems are designed so that spent resins can be remotely and hydraulically transferred to spent resin storage tanks so that fresh resin can be loaded into the demineralizer remotely. The demineralizers and piping are designed with the ability to be flushed with demineralized water. Strainers are installed in the vent lines to prevent the entry of spent resin into the exhaust duct.

C. Evaporators

Adequate space and flanged connections for easy removal are provided for the maintenance of evaporator components. Additionally, the evaporator can be operated in an automatic operation mode that can reduce the exposure of the operator to radiation from the equipment.

D. Pumps

Wherever practicable, pumps are sealed with mechanical seals to reduce seal servicing time. Pumps and associated piping are arranged to provide adequate space for access to the pumps for servicing. Small pumps are installed to allow easy removal, if necessary. All pumps in the radioactive waste systems are provided with flanged connections for ease of removal. Pump casings are provided with drain connections for draining pumps for maintenance.

E. Tanks

Whenever practicable, tanks are provided with sloped bottoms and bottom outlet connections. Overflow lines are directed to the waste collection system to ~~control any~~ minimize the potential for the spread of contamination within plant structures. Tanks containing radioactive fluids ~~are~~ have overboard lines at least equal in size to the largest inlet line. The tank vent line is either ~~equipped with~~ open ~~vents~~ to the cubicle or connected directly to the ventilation system. The spent resin tank vents are equipped with a break-pot, which separates the air from the moisture and any entrained resin, which are subsequently sent to the A/B sump, and vents the air to the exhaust ductwork. These measures minimize the possible contamination of the area and the ductwork. Tanks containing radioactive particulate material shall have smooth welds and mixing,

flushing and cleaning capabilities to prevent retention of the radioactive particulate material.

Tank cubicles are coated with non-porous material up to a wall height to contain the entire tank content. The cubicles are equipped with a drainage system to direct any leakage and overflows to sumps with pumps to redirect flow to other tanks. The drainage system is equipped with a liquid detection instrument which can provide early warning for leakage and/or overflow condition to initiate operator actions. The floors of these cubicles containing radioactive fluid are sloped to facilitate faster drainage and to minimize liquid accumulation, and provided with coating with non-porous material to prevent cross contamination.

F. Heat Exchangers

Most of the heat exchangers are shell and tube type heat exchangers. These are provided with corrosion-resistant tubes of stainless steel or other suitable materials to minimize leakage. Impact baffles are provided and the tube side and shell side velocities are limited to minimize erosion effects. Wherever possible, the radioactive fluid passes through the tube side of the heat exchanger.

Some heat exchangers, specifically the SFP heat exchangers and the component cooling water heat exchangers, are plate-type heat exchangers constructed of austenitic stainless steel. For the SFP heat exchangers, the SFP water circulates through one side of the heat exchanger while the component cooling water circulates through the other side. For the component cooling water heat exchangers, the component cooling water circulates through one side of the heat exchanger while the essential service water circulates through the other side.

G. Instruments

Instruments are located in low radiation zones and away from radiation sources, whenever practical.

Instruments, which are located in high radiation zones, are designed for easy removal to a lower radiation zone for calibration.

Transmitters and readout devices are located in low radiation zones, such as corridors and the control room.

Some instruments in high radiation zones, such as thermocouples, are provided in duplicate to reduce required access and service time. In the containment, instruments are located outside the secondary shield (the area of lowest radiation at power and during shutdown), whenever practical.

Check sources for response verification for airborne radiation monitors and safety-related area radiation monitors are provided.

Chemical seals are provided on the instrument sensing lines of process piping, which may contain highly radioactive solids, to reduce the servicing time required to keep the

lines free of solids. Instruments and sensing line connections are located slightly above the pipe mid-plane wherever practical to minimize radioactive crud or gas buildup.

H. Valves

To minimize personnel exposures from valve operations, motor-operated, air-operated, or other remotely actuated valves are used where justified by the activity levels and frequency of use. Valves are located in valve galleries so that they are shielded separately from the major components. Long runs of exposed piping are minimized in valve galleries.

In areas where manual valves are used on frequently operated process lines, either valve stem extenders or shielding is provided such that personnel need not enter a high radiation area for valve operation.

When equipment in high radiation areas is operated infrequently, only manual valves associated with the safe operation of the equipment are provided with remote-manual operators or reach rods. All other valve operations are performed with equipment in the shutdown mode.

For valves located in radiation areas, provisions are made to drain the adjacent radioactive components when maintenance is required. To the extent practicable, valves are not located at piping low points.

Valves in the containment that are expected to exhibit stem leakage are provided with leak-off connections, piped to the reactor coolant drain tank (reactor coolant drain tank or a reduced packing configuration with the valve stem leak-off line capped).

Valves for clean, non-radioactive systems are separated from radioactive sources and are located in readily accessible areas.

For most large valves in lines carrying radioactive fluids, a double set of packing with a lantern ring is provided. A stuffing box with a leak-off connection that is piped to a drain header is also provided. Metal diaphragm or bellows seat valves are used on those systems where essentially no leakage can be tolerated. The design of valves located in the piping carrying radioactive fluids or gases include hermetically sealed (packless) valves, live-loaded packing and graphite packing materials to reduce the potential for fluids or gases leakage.

Manually operated valves in the filter and demineralizer valve compartments required for normal operation and shutdown are equipped with reach rods extending through or over the valve gallery wall.

Personnel do not enter the valve gallery during spent resin or cartridge transfer operations. The valve gallery shield walls are designed to minimize personnel exposure during the maintenance of components within or adjacent to the gallery and to protect personnel who remotely operate the valves.

Relief valves are located in an associated equipment compartment or valve gallery. Check valves are located in the equipment compartment or associated valve gallery unless they are the locking type requiring manipulation during normal operation. In this case, check valves are treated as normal manual valves.

I. Piping

The piping in pipe chases is designed for the lifetime of the unit. Wherever radioactive piping is routed through areas where routine maintenance is required, pipe chases are provided to reduce the radiation contribution from these pipes to levels appropriate for the inspection or maintenance requirements. Butt welds are used to the fullest extent possible in radwaste piping utilized for the transport of spent resins or slurries. Piping containing radioactive material is routed to minimize radiation exposure to the unit personnel. Provisions are made in radioactive systems for flushing the piping with sufficient water to reduce crud buildup. Welds are made smooth to prevent crud traps from forming.

J. Floor Drains

Floor drains and properly sloped floors are provided for each room or cubicle containing serviceable components containing radioactive liquids. When practicable, shielded pipe chases are used for radioactive pipes. If a radioactive drain line must pass through a plant area requiring personnel access, shielding is provided, as necessary, to ensure that radiation levels are consistent with the required access.

K. Heating, Ventilation, and Air-Conditioning

The HVAC system design facilitates the replacement of the filter elements.

L. Sample Stations

Proper shielding and ventilation are provided at the local sample stations to maintain radiation zoning in proximate areas and minimize personnel exposure during sampling. The use of concrete containing fly ash is minimized in the counting room and laboratory areas.

M. Clean Services

Whenever possible, clean services and equipment such as compressed air piping, clean water piping, ventilation ducts, and cable trays are not routed through radioactive pipeways.

12.3.1.1.2 Common Facility and Layout Designs for As Low As Reasonably Achievable

This subsection describes the design features utilized for the standard type plant process and layout situations. The features used in conjunction with the general equipment described in Subsection 12.3.1.1.1 are discussed in the following paragraphs.

COL 12.3(9) In order to ensure that the B.A. evaporator room does not become a VHRA during the end of cycle, the COL Applicant is to stipulate a need for routine surveillance in the Radiation Protection Program. In the event that the routine surveillance shows an increase in dose level, the COL Applicant must provide an appropriate strategy to sufficiently reduce the dose rate below the criteria for a VHRA.

12.3.7 References

12.3-1 Information Relevant to Ensuring that Occupational Radiation Exposures at Nuclear Power Stations Will Be as Low as Is Reasonably Achievable. RG 8.8, Paragraph C.2, Rev. 3, U.S. Nuclear Regulatory Commission, Washington, DC, June 1978.

12.3-2 "Standards for Protection against Radiation," Energy. Title 10 Code of Federal Regulations Part 20, U.S. Nuclear Regulatory Commission, Washington, DC.

12.3-3 Control of Access to High and Very High Radiation Areas of Nuclear Plants. RG 8.38, Rev. 1, U.S. Nuclear Regulatory Commission, Washington, DC, May 2006.

12.3-4 'Control of Access to High Radiation Areas,' "Standards for Protection against Radiation," Energy. Title 10, Code of Federal Regulations, Part 20.1601, U.S. Nuclear Regulatory Commission, Washington, DC.

12.3-5 'Posting Requirements,' "Standards for Protection against Radiation," Energy. Title 10, Code of Federal Regulations, Part 20.1902, U.S. Nuclear Regulatory Commission, Washington, DC.

12.3-6 "Plant Shielding," Section II.B.2, Clarification of TMI Action Plan Requirements. NUREG-0737, U.S. Nuclear Regulatory Commission, Washington, DC, January 1980.

12.3-7 "Domestic Licensing of Production and Utilization Facilities," Energy. Title 10, Code of Federal Regulations, Part 50, U.S. Nuclear Regulatory Commission, Washington, DC.

12.3-8 'General Design Criteria for Nuclear Power Plants,' "Domestic Licensing of Production and Utilization Facilities," Energy. Title 10, Code of Federal Regulations, Part 50, Appendix A, U.S. Nuclear Regulatory Commission, Washington, DC.

12.3-9 Concrete Radiation Shields for Nuclear Power Plants. RG 1.69, Rev.0, U.S. Nuclear Regulatory Commission, Washington, DC, December 1973.

12.3-10 Alternative Radiological Source Terms for Evaluating Design Basis Accidents at Nuclear Power Reactors. RG 1.183, Rev. 0, U.S. Nuclear Regulatory Commission, Washington, DC, July 2000.

Chapter 13

Page	Location (e.g., subsection with paragraph/ sentence/ item, table with row/column, or figure)	Description of Change
13.4-1	Section 13.4.1, Section 13.4.2	Revised to include a COL Information Item and a reference to ensure the COL holder implements a program meeting the requirements of NUREG-0737 Item III.D.1.1 for the systems identified in TS 5.5.2. [RAI 526-4121, Question 09.03.02-13]

13.4 Operational Program Implementation

The development of operational program descriptions and implementation schedules is designated as the responsibility of the COL Applicant.

13.4.1 Combined License Information

COL 13.4(1) *The COL Applicant is to develop a description and schedule for the implementation of operational programs. The COL Applicant is to "fully describe" the operational programs as defined in SECY-05-0197 (Ref. 13.4-1) and provide commitments for the implementation of operational programs required by regulation. In some instances, programs may be implemented in phases. The COL Applicant is to include the phased implementation milestones in their submittal.*

COL 13.4(2) *The COL Applicant is to develop a leakage monitoring and prevention program for the systems specified in TS 5.5.2. The leakage monitoring and prevention program will include the appropriate methods and acceptance criteria as defined in NUREG-0737 Item III.D.1.1 (Ref 13.4-2).*

13.4.2 References

13.4-1 Staff Requirements-SECY-05-0197-Review of Operational Programs in a Combined License Application and Generic Emergency Planning Inspections, Tests, Analyses, and Acceptance Criteria. SRM-SECY-05-0197, U.S. Nuclear Regulatory Commission, Washington, DC, February 2006.

13.4-2 Clarification of TMI Action Plan Requirements, NUREG-0737, U.S. Nuclear Regulatory Commission, Washington, DC, November 1980.

Chapter 14

Page	Location (e.g., subsection with paragraph/sentence/ Item, table with column/row, or figure)	Description of Change
14.2-18	14.2.8.2.1	Added the following text as the first sentence of the first paragraph: Natural circulation testing for the first plant is performed in accordance with Subsection 14.2.12.2.3.9. RAI 548, 05.04.07-12
14.2-109	14.2.12.1.80	Revised to include manual and automatic system controls, interlocks, alarms and indications verification during preoperational testing. RAI 523-4246,11.02-31
14.2-117, 118	14.2.12.1.87	Added the following text as C.7 and C.8 respectively: 7. The CCW header tie line isolation valves' closure logic is verified to be consistent with Subsection 9.2.2.2.1.5 using simulated signals. Valve response to ESF actuation signals may be verified via other tests (e.g., Subsection 14.2.12.1.55, ECCS Actuation and Containment Isolation Logic Preoperational Test). 8. The CCW header tie line isolation valves' closure time is verified to be consistent with Subsection 9.2.2.2.1.5. Renumbered to C.9 and D.9 to align the section number. Added the following text ad D.8: 8. The CCW header tie line isolation valves' closure logic and closure time are consistent with Subsection 9.2.2.2.1.5. RAI 554, 14.02-121
14.2-164	14.2.12.2.3.9	Added the boron mixing test and renumbered. RAI 548, 05.04.07-12
14.2-174	14.2.12.4.11	Replaced "at or around the design temperatures based on outside air ambient design conditions" with "within the design temperatures based on recorded environmental conditions". RAI 558, 06.05.01-18
14.2-187	Table 14.2-2	Replaced the title of RG 1.45 "Reactor Coolant Pressure Boundary Leakage Detection Systems" with "Guidance on Monitoring and Responding to Reactor Coolant System Leakage". RAI 549, 05.02.05-12

certification for previous plants and, which will not change from plant to plant, that are performed for the first three plants. There are no first-three-plants tests required.

The justifications for the first-plant-only tests and the justifications for there being no first-three-plant tests required are provided below:

14.2.8.1.1 Reactor Internals Vibration Test (14.2.12.1.7)

Preoperational vibration test of reactor internals is performed in accordance with RG 1.20 (Reference 14.2-13). This program is discussed in Subsection 3.9.2.

This test is conducted only during the hot functional test prior to fuel loading because the vibration responses under normal operating conditions with core are predicted to be almost the same or slightly lower than those under hot functional tests without the core loaded.

Justification for performing this on the first plant only is provided in Subsections 3.9.2.3 and 3.9.2.4.

14.2.8.1.2 Deleted

14.2.8.1.3 RCCA Misalignment Measurement and Radial Power Distribution Oscillation Test (14.2.12.2.4.5)

RCCA misalignment measurements and radial power distribution oscillation tests are performed in the power ascension test phase for the first US-APWR. The test is required only for the first plant because the stability of the radial power distribution is dependent upon the core diameter only. This test validates the calculation tools and instrument responses.

14.2.8.2 Prototype Test Results

14.2.8.2.1 Natural Circulation Testing

Natural circulation testing for the first plant is performed in accordance with Subsection 14.2.12.2.3.9. For subsequent plants, the COL applicant either performs the test or provides a justification for not performing the test based on an evaluation of the results of previous natural circulation tests and comparison of RCS hydraulic resistance coefficients applicable to normal flow conditions provided that

- Test results from the US-APWR reference prototype plant indicate that natural circulation flow rates are adequate to ensure that core decay heat removal, boron mixing, plant cooldown/depressurization, and stable natural circulation conditions are maintained throughout the test.

- The as-built plant and US-APWR reference prototype plant configurations are the same relative to the general configuration of the piping and components in each reactor coolant loop, the general arrangement of the reactor core and internals, and similar elevation head represented by these components and the system piping.

1. The control circuitry and operation of system pumps and valves is verified.

2. The system is operated and performance characteristics verified.

3. Verify manual and automatic system controls, interlocks, alarms and indications as described in Section 11.2.

D. Acceptance Criteria

1. The performance characteristics of the system pumps are as designed (Section 11.2)

2. The pump and valve controls and interlocks operate as designed.

3. The containment and reactor and auxiliary buildings drain subsystems function as designed.

4. The Liquid Waste Management System operates as described in Section 11.2.

14.2.12.1.81 Gaseous Waste Management System Preoperational Test

A. Objectives

1. To demonstrate operation of the waste gas compressors, charcoal bed, waste gas dryer, and waste gas management system components and associated control and interlock circuitry.

2. To demonstrate waste gas compressor, charcoal delay bed, waste gas dryer, and waste gas management system performance.

B. Prerequisites

1. Required construction testing is completed.

2. Component testing and instrument calibration is completed.

3. Test instrumentation is available and calibrated.

4. Required support systems are available.

5. Required electrical power supplies and control circuits are energized and available.

6. The compressed gas system is available to supply nitrogen to the waste gas system and the waste gas dryer.

7. The CCW system is available to supply cooling water to the waste gas compressors and the waste gas dryer.

8. The PMWS is available to provide water to the waste gas compressors.

5. Demineralized water is available for system makeup.

6. The CCW is aligned to cool the CCW motors.

7. The ESWS is available to CCW heat exchangers.

C. Test Method

1. The control circuitry of the CCW pumps, surge tanks, and valves is verified.

2. The CCW system pumps are operated, and performance characteristics verified.

3. System flows are balanced, as required, and then verified in each mode of operation. Testing includes verification of coolant flow to the thermal barrier via cross-tie.

4. The cooling ability of the CCW system is verified during RCS heatup and cooldown in conjunction with the RHRS during the hot functional test.

5. CCW surge tank vent valve closure logic is verified using a simulated high CCW radiation monitor condition.

6. The thermal barrier heat exchanger cooling water return line isolation valve logic is verified using a simulated reactor coolant pump thermal barrier heat exchanger cooling water high flow condition.

7. The CCW header tie line isolation valves' closure logic is verified to be consistent with Subsection 9.2.2.2.1.5 using simulated signals. Valve response to ESF actuation signals may be verified via other tests (e.g., Subsection 14.2.12.1.55, ECCS Actuation and Containment Isolation Logic Preoperational Test).

8. The CCW header tie line isolation valves' closure time is verified to be consistent with Subsection 9.2.2.2.1.5.

9~~7~~. Demonstrate the ability to provide makeup water and verify flow to each pressurized CCW surge tank using DWS, PMWS and RWS supplies.

D. Acceptance Criteria

1. The tank alarms and interlocks operate as designed.

2. The performance characteristics of the CCW pumps are within design specifications (Subsection 9.2.2)

3. Components that are supplied with CCW receive flows that are within the design specifications in each of the operating modes including the supply of coolant flow to the thermal barrier via cross-tie.

4. The pump control and interlocks operate as designed.

5. CCW system performance characteristics are within design specifications.

6. CCW surge tank vent valve high radiation logic operates as described in Subsection 9.2.2.5.2.

7. The thermal barrier heat exchanger cooling water return line isolation valve logic operates as described in Subsection 9.2.2.5.5.

8. The CCW header tie line isolation valves' closure logic and closure time are consistent with Subsection 9.2.2.2.1.5.

9~~8~~. The ability to provide makeup water to each pressurized CCW surge tank using DWS, PMWS and RWS supplies is demonstrated.

14.2.12.1.88 Turbine Component Cooling Water System Preoperational Test

A. Objective

1. To verify that the system components perform their function of supplying adequate cooling water to the designated turbine building components, as described in Subsection 9.2.8.

B. Prerequisites

1. Required construction testing is completed.

2. Component testing and instrument calibration is completed.

3. Test instrumentation is available and calibrated.

4. Required support systems are available.

5. Electrical power supplies and control circuits are operational.

6. Components cooled by the system are operational and operating for verifying the heat exchanger capability.

C. Test Method

1. Turbine component cooling water system performance is observed and recorded during individual component and integrated system testing.

2. Operation of the system pumps and valves is verified.

3. Operation of the system instrumentation, controls, actuation signals, and interlocks is verified.

4. Verify indications and alarms.

D. Acceptance Criteria

1. System pumps and valves operate as described in Subsection 9.2.8.

14.2.12.2.3.9 Natural Circulation Test

(Perform on first plant. For subsequent plants, see discussion in Subsection 14.2.8.2.)

A. Objectives

1. To demonstrate the capability to remove decay heat by natural circulation.
2. To demonstrate boron mixing occurs during natural circulation.

B. Prerequisites

1. RCPs are operating.
2. Primary system is at normal operating temperature and pressure.
3. The feedwater system is available for decay heat removal.
4. RCS boron concentration has been determined via multiple primary liquid sampling points.

C. Test Method

1. The test is initiated by tripping all RCPs.
2. Heat removal is achieved via feedwater system operation and natural circulation.
3~~2~~. Natural circulation is verified by observing the response of the hot leg and cold leg temperature instrumentation in each loop for natural circulation stabilization period and the ability to maintain the cooling mode.
4. RCS boration is performed during the test, with samples taken from multiple primary liquid sampling points.

D. Acceptance Criteria

1. Decay heat removal capability is demonstrated by maintaining natural circulation conditions.

14.2.12.2.3.10 Automatic Low Power SG Water Level Control Test

A. Objective

1. To verify the stability of the automatic low power SG water level control system following simulated transients at low power conditions.

B. Prerequisites

1. The reactor is critical, and in the low power level.
2. The SG water level control system is checked and calibrated.

2. Record temperature readings in specified areas while operating the designed minimum number of HVAC components consistent with existing plant conditions.

3. Record surface concrete temperatures adjacent to the high temperature piping penetrations and at selected locations on the concrete shielding primary shield wall, and at selected locations between the reactor vessel support base plates and concrete (at 100% power only).

4. Record outside air ambient environmental conditions.

D. Acceptance Criteria

1. Temperature conditions are maintained in the containment and ESF areas in accordance with Subsections 9.4.5, 9.4.6, and Table 9.4-1. It has been demonstrated through testing and analyses that the temperatures for these areas are being maintained ~~at or around~~ within the design temperatures based on recorded environmental ~~outside air ambient design~~ conditions.

2. Concrete surface temperatures are maintained in accordance with Subsection 9.4.6.1.2.3.

14.2.12.2.4.12 RCS Flow Measurement Test

A. Objectives

1. As for RCS flow rate measurement, RCS flow rate is determined based on the correlation between data obtained by measuring RCP motor input power and the differential pressure across the reactor coolant line elbow tap, for the purpose of confirming reactor coolant flow is equal to or greater than the design flow specified in Section 5.1.

2. To perform calorimetric flow measurements at 50%, 75%, and 100% power, for the purpose of confirming RCS flow is equal to or greater than the design flow in Section 5.1.

B. Prerequisites

1. Required instrument calibration is completed.

2. Required support systems are operational.

3. The reactor core is installed, and the plant is at normal operating temperature and pressure prior to initial criticality.

C. Test Method

1. Prior to criticality, operating all RCPs and any combination of them including a single operation, input power of each operating RCP motor and relating RCS line elbow tap differential pressure is measured. RCS flow rate is calculated using

Table 14.2-2 Regulatory Guides Associated with the ITP (Sheet 2 of 2)

20	RG 1.45, "~~Reactor Coolant Pressure Boundary Leakage Detection Systems~~Guidance on Monitoring and Responding to Reactor Coolant System Leakage," Rev.1, May 2008
21	RG 1.196, "Control Room Habitability at Light-Water Nuclear Power Reactors," Rev. 1, January 2007
22	RG 1.35, "Inservice Inspection Of Ungrouted Tendons In Prestressed Concrete Containments," Rev 3, July 1990
23	RG 1.35.1, "Determining Prestressing Forces For Inspection Of Prestressed Concrete Containments," July 1990

Chapter 15

Page	Location (e.g., subsection with paragraph/ sentence/ item, table with row/column, or figure)	Description of Change
15A-25	Table 15A-18 Sheet 1 4th and 5th Rows	Delete rows for "Horizontal Distance" and "Vertical Distance" Reason: Deleted redundant information contained in Chapter 2 tables. [RAI 562-4427 Question 02.03.04-7]
15A-25	Table 15A-18 Sheet 1 Last Row	Change the values for χ/Q for the 96-720 hour. Reason: The 96-720 hour χ/Q value of the DCD should be representative of a reasonable number of sites and has been changed to bound the site parameter of North Anna, Clinton, Grand Gulf, and Vogtle. [RAI 562-4427 Question 02.03.04-9]
15A-25	Table 15A-18 Sheet 2 Last Row	Change the values for χ/Q for the 96-720 hour. Reason: The 96-720 hour χ/Q value of the DCD should be representative of a reasonable number of sites and has been changed to bound the site parameter of North Anna, Clinton, Grand Gulf, and Vogtle. [RAI 562-4427 Question 02.03.04-9]
15A-26	Table 15A-19 Last Row	Change the values for χ/Q for the 96-720 hour. Reason: The 96-720 hour χ/Q value of the DCD should be representative of a reasonable number of sites and has been changed to bound the site parameter of North Anna, Clinton, Grand Gulf, and Vogtle. [RAI 562-4427 Question 02.03.04-9]
15A-27	Table 15A-20 Sheet 1 Last Row	Change the values for χ/Q for the 96-720 hour. Reason: The 96-720 hour χ/Q value of the DCD should be representative of a reasonable number of sites and has been changed to bound the site parameter of North Anna, Clinton, Grand Gulf, and Vogtle. [RAI 562-4427 Question 02.03.04-9]
15A-27	Table 15A-20 Sheet 2 Last Row	Change the values for χ/Q for the 96-720 hour. Reason: The 96-720 hour χ/Q value of the DCD should be representative of a reasonable number of sites and has been changed to bound the site parameter of North Anna, Clinton, Grand Gulf, and Vogtle. [RAI 562-4427 Question 02.03.04-9]
15A-28	Table 15A-20 Sheet 3 Last Row	Change the values for χ/Q for the 96-720 hour. Reason: The 96-720 hour χ/Q value of the DCD should be representative of a reasonable number of sites and has been changed to bound the site parameter of North

Page	Location (e.g., subsection with paragraph/ sentence/ item, table with row/column, or figure)	Description of Change
		Anna, Clinton, Grand Gulf, and Vogtle. [RAI 562-4427 Question 02.03.04-9]
15A-29	Table 15A-21 Last Row	Change the values for χ/Q for the 96-720 hour. Reason: The 96-720 hour χ/Q value of the DCD should be representative of a reasonable number of sites and has been changed to bound the site parameter of North Anna, Clinton, Grand Gulf, and Vogtle. [RAI 562-4427 Question 02.03.04-9]
15A-29	Table 15A-22 Last Row	Change the values for χ/Q for the 96-720 hour. Reason: The 96-720 hour χ/Q value of the DCD should be representative of a reasonable number of sites and has been changed to bound the site parameter of North Anna, Clinton, Grand Gulf, and Vogtle. [RAI 562-4427 Question 02.03.04-9]
15A-30	Table 15A-23 Sheet 1 Last Row	Change the values for χ/Q for the 96-720 hour. Reason: The 96-720 hour χ/Q value of the DCD should be representative of a reasonable number of sites and has been changed to bound the site parameter of North Anna, Clinton, Grand Gulf, and Vogtle. [RAI 562-4427 Question 02.03.04-9]
15A-30	Table 15A-23 Sheet 2 Last Row	Change the values for χ/Q for the 96-720 hour. Reason: The 96-720 hour χ/Q value of the DCD should be representative of a reasonable number of sites and has been changed to bound the site parameter of North Anna, Clinton, Grand Gulf, and Vogtle. [RAI 562-4427 Question 02.03.04-9]
15A-31	Table 15A-24 Sheet 1 Last Row	Change the values for χ/Q for the 96-720 hour. Reason: The 96-720 hour χ/Q value of the DCD should be representative of a reasonable number of sites and has been changed to bound the site parameter of North Anna, Clinton, Grand Gulf, and Vogtle. [RAI 562-4427 Question 02.03.04-9]
15A-31	Table 15A-24 Sheet 2 Last Row	Change the values for χ/Q for the 96-720 hour. Reason: The 96-720 hour χ/Q value of the DCD should be representative of a reasonable number of sites and has been changed to bound the site parameter of North Anna, Clinton, Grand Gulf, and Vogtle. [RAI 562-4427 Question 02.03.04-9]

DCD_02.03.04-7
DCD_02.03.04-9

Table 15A-18
MCR and TSC χ/Q for Steam System Piping Failure Analysis (Sheet 1 of 2)

Accidents		Steam system piping failure			
Sources		Steam line break releases			
Receptors		MCR		TSC	
		Intake	Inleak	Intake	Inleak
~~Horizontal Distance (m)~~		~~17~~	~~17~~	~~67~~	~~67~~
~~Vertical Distance (m)~~		~~0~~	~~0~~	~~0~~	~~0~~
χ/Q (s/m³)	0-8 hr	1.9×10^{-2}	1.9×10^{-2}	1.4×10^{-3}	1.4×10^{-3}
	8-24 hr	1.1×10^{-2}	1.1×10^{-2}	8.4×10^{-4}	8.4×10^{-4}
	24-96 hr	7.1×10^{-3}	7.1×10^{-3}	5.3×10^{-4}	5.3×10^{-4}
	96-720 hr	~~3.1×10^{-3}~~ 4.7×10^{-3}	~~3.1×10^{-3}~~ 4.7×10^{-3}	~~2.3×10^{-4}~~ 3.5×10^{-4}	~~2.3×10^{-4}~~ 3.5×10^{-4}

Table 15A-18
MCR and TSC χ/Q for Steam System Piping Failure Analysis (Sheet 2 of 2)

Accidents		Steam system piping failure			
Sources		Main steam relief valve and safety valve releases			
Receptors		MCR		TSC	
		Intake	Inleak	Intake	Inleak
χ/Q (s/m³)	0-8 hr	5.3×10^{-3}	5.3×10^{-3}	1.7×10^{-3}	1.7×10^{-3}
	8-24 hr	3.1×10^{-3}	3.1×10^{-3}	9.9×10^{-4}	9.9×10^{-4}
	24-96 hr	2.0×10^{-3}	2.0×10^{-3}	6.3×10^{-4}	6.3×10^{-4}
	96-720 hr	~~8.7×10^{-4}~~ 1.3×10^{-3}	~~8.7×10^{-4}~~ 1.3×10^{-3}	~~2.8×10^{-4}~~ 4.2×10^{-4}	~~2.8×10^{-4}~~ 4.2×10^{-4}

Table 15A-19
MCR and TSC χ/Q for RCP Rotor Seizure Analysis

Accidents		RCP rotor seizure accident			
Sources		Main steam relief valve and safety valve releases			
Receptors		MCR		TSC	
		Intake	Inleak	Intake	Inleak
χ/Q (s/m³)	0-8 hr	5.3×10^{-3}	5.3×10^{-3}	1.7×10^{-3}	1.7×10^{-3}
	8-24 hr	3.1×10^{-3}	3.1×10^{-3}	9.9×10^{-4}	9.9×10^{-4}
	24-96 hr	2.0×10^{-3}	2.0×10^{-3}	6.3×10^{-4}	6.3×10^{-4}
	96-720 hr	~~8.7×10^{-4}~~ 1.3×10^{-3}	~~8.7×10^{-4}~~ 1.3×10^{-3}	~~2.8×10^{-4}~~ 4.2×10^{-4}	~~2.8×10^{-4}~~ 4.2×10^{-4}

Table 15A-20
MCR and TSC χ/Q for Rod Ejection Accident Analysis (Sheet 1 of 3)

Accidents		Rod ejection accident			
Sources		Main steam relief valve and safety valve releases			
Receptors		MCR		TSC	
		Intake	Inleak	Intake	Inleak
χ/Q (s/m³)	0-8 hr	1.1×10^{-3}	1.4×10^{-3}	1.4×10^{-3}	1.4×10^{-3}
	8-24 hr	6.6×10^{-4}	8.0×10^{-4}	8.0×10^{-4}	8.0×10^{-4}
	24-96 hr	4.2×10^{-4}	5.1×10^{-4}	5.1×10^{-4}	5.1×10^{-4}
	96-720 hr	~~1.9×10^{-4}~~ 2.8×10^{-4}	~~2.2×10^{-4}~~ 3.3×10^{-4}	~~2.2×10^{-4}~~ 3.3×10^{-4}	~~2.2×10^{-4}~~ 3.3×10^{-4}

Table 15A-20
MCR and TSC χ/Q for Rod Ejection Accident Analysis (Sheet 2 of 3)

Accidents		Rod ejection accident			
Sources		Main steam relief valve and safety valve releases			
Receptors		MCR		TSC	
		Intake	Inleak	Intake	Inleak
χ/Q (s/m³)	0-8 hr	2.2×10^{-3}	2.4×10^{-3}	1.9×10^{-3}	1.9×10^{-3}
	8-24 hr	1.3×10^{-3}	1.4×10^{-3}	1.1×10^{-3}	1.1×10^{-3}
	24-96 hr	8.3×10^{-4}	9.1×10^{-4}	7.2×10^{-4}	7.2×10^{-4}
	96-720 hr	~~3.6×10^{-4}~~ 5.5×10^{-4}	~~4.0×10^{-4}~~ 6.0×10^{-4}	~~3.2×10^{-4}~~ 4.8×10^{-4}	~~3.2×10^{-4}~~ 4.8×10^{-4}

Table 15A-20
MCR and TSC χ/Q for Rod Ejection Accident Analysis (Sheet 3 of 3)

Accidents		Rod ejection accident			
Sources		Main steam relief valve and safety valve releases			
Receptors		MCR		TSC	
		Intake	Inleak	Intake	Inleak
χ/Q (s/m³)	0-8 hr	5.3×10^{-3}	5.3×10^{-3}	1.7×10^{-3}	1.7×10^{-3}
	8-24 hr	3.1×10^{-3}	3.1×10^{-3}	9.9×10^{-4}	9.9×10^{-4}
	24-96 hr	2.0×10^{-3}	2.0×10^{-3}	6.3×10^{-4}	6.3×10^{-4}
	96-720 hr	~~8.7×10^{-4}~~ 1.3×10^{-3}	~~8.7×10^{-4}~~ 1.3×10^{-3}	~~2.8×10^{-4}~~ 4.2×10^{-4}	~~2.8×10^{-4}~~ 4.2×10^{-4}

Table 15A-21
MCR and TSC χ/Q for Failure of Small Lines Carrying Primary Coolant Outside Containment Analysis

Accidents		Failure of small lines carrying primary coolant outside containment			
Sources		Plant vent			
Receptors		MCR		TSC	
		Intake	Inleak	Intake	Inleak
χ/Q (s/m³)	0-8 hr	1.1×10^{-3}	1.4×10^{-3}	1.4×10^{-3}	1.4×10^{-3}
	8-24 hr	6.6×10^{-4}	8.0×10^{-4}	8.0×10^{-4}	8.0×10^{-4}
	24-96 hr	4.2×10^{-4}	5.1×10^{-4}	5.1×10^{-4}	5.1×10^{-4}
	96-720 hr	~~1.9×10^{-4}~~ 2.8×10^{-4}	~~2.2×10^{-4}~~ 3.3×10^{-4}	~~2.2×10^{-4}~~ 3.3×10^{-4}	~~2.2×10^{-4}~~ 3.3×10^{-4}

Table 15A-22
MCR and TSC χ/Q for SGTR Analysis

Accidents		SGTR			
Sources		Main steam relief valve and safety relief valve releases			
Receptors		MCR		TSC	
		Intake	Inleak	Intake	Inleak
χ/Q (s/m³)	0-8 hr	5.3×10^{-3}	5.3×10^{-3}	1.7×10^{-3}	1.7×10^{-3}
	8-24 hr	3.1×10^{-3}	3.1×10^{-3}	9.9×10^{-4}	9.9×10^{-4}
	24-96 hr	2.0×10^{-3}	2.0×10^{-3}	6.3×10^{-4}	6.3×10^{-4}
	96-720 hr	~~8.7×10^{-4}~~ 1.3×10^{-3}	~~8.7×10^{-4}~~ 1.3×10^{-3}	~~2.8×10^{-4}~~ 4.2×10^{-4}	~~2.8×10^{-4}~~ 4.2×10^{-4}

Table 15A-23
MCR and TSC χ/Q for LOCA Analysis (Sheet 1 of 2)

Accidents		LOCA			
Sources		Plant vent			
Receptors		MCR		TSC	
		Intake	Inleak	Intake	Inleak
χ/Q (s/m³)	0-8 hr	$1.1x10^{-3}$	$1.3x10^{-3}$	$1.4x10^{-3}$	$1.4x10^{-3}$
	8-24 hr	$6.6x10^{-4}$	$7.8x10^{-4}$	$8.0x10^{-4}$	$8.0x10^{-4}$
	24-96 hr	$4.2x10^{-4}$	$4.9x10^{-4}$	$5.1x10^{-4}$	$5.1x10^{-4}$
	96-720 hr	~~$1.9x10^{-4}$~~ $2.8x10^{-4}$	~~$2.2x10^{-4}$~~ $3.3x10^{-4}$	~~$2.2x10^{-4}$~~ $3.3x10^{-4}$	~~$2.2x10^{-4}$~~ $3.3x10^{-4}$

Table 15A-23
MCR and TSC χ/Q for LOCA Analysis (Sheet 2 of 2)

Accidents		LOCA			
Sources		Ground level containment release point			
Receptors		MCR		TSC	
		Intake	Inleak	Intake	Inleak
χ/Q (s/m³)	0-8 hr	$2.2x10^{-3}$	$2.4x10^{-3}$	$1.9x10^{-3}$	$1.9x10^{-3}$
	8-24 hr	$1.3x10^{-3}$	$1.4x10^{-3}$	$1.1x10^{-3}$	$1.1x10^{-3}$
	24-96 hr	$8.3x10^{-4}$	$9.1x10^{-4}$	$7.2x10^{-4}$	$7.2x10^{-4}$
	96-720 hr	~~$3.6x10^{-4}$~~ $5.5x10^{-4}$	~~$4.0x10^{-4}$~~ $6.0x10^{-4}$	~~$3.2x10^{-4}$~~ $4.8x10^{-4}$	~~$3.2x10^{-4}$~~ $4.8x10^{-4}$

Table 15A-24
MCR and TSC χ/Q for Fuel Handling Accident Analysis (Sheet 1 of 2)

Accidents		Fuel handling accident in the containment			
Sources		Plant vent			
Receptors		MCR		TSC	
		Intake	Inleak	Intake	Inleak
χ/Q (s/m³)	0-8 hr	1.1×10^{-3}	1.4×10^{-3}	1.4×10^{-3}	1.4×10^{-3}
	8-24 hr	6.6×10^{-4}	8.0×10^{-4}	8.0×10^{-4}	8.0×10^{-4}
	24-96 hr	4.2×10^{-4}	5.1×10^{-4}	5.1×10^{-4}	5.1×10^{-4}
	96-720 hr	~~1.9×10^{-4}~~ 2.8×10^{-4}	~~2.2×10^{-4}~~ 3.3×10^{-4}	~~2.2×10^{-4}~~ 3.3×10^{-4}	~~2.2×10^{-4}~~ 3.3×10^{-4}

Table 15A-24
MCR and TSC χ/Q Fuel Handling Accident Analysis (Sheet 2 of 2)

Accidents		Fuel handling accident in the fuel handling area			
Sources		Fuel handling area			
Receptors		MCR		TSC	
		Intake	Inleak	Intake	Inleak
χ/Q (s/m³)	0-8 hr	1.1×10^{-3}	1.1×10^{-3}	6.7×10^{-4}	6.7×10^{-4}
	8-24 hr	6.4×10^{-4}	6.7×10^{-4}	3.9×10^{-4}	3.9×10^{-4}
	24-96 hr	4.1×10^{-4}	4.3×10^{-4}	2.5×10^{-4}	2.5×10^{-4}
	96-720 hr	~~1.8×10^{-4}~~ 2.7×10^{-4}	~~1.9×10^{-4}~~ 2.8×10^{-4}	~~1.1×10^{-4}~~ 1.7×10^{-4}	~~1.1×10^{-4}~~ 1.7×10^{-4}

Chapter 16

Page	Location (e.g., subsection with paragraph/sentence/ Item, table with column/row, or figure)	Description of Change
Technical Specifications		
3.5.1-4	SR 3.5.1.6	RAI No.384, Question No.09.03.04-10 Added new SR as follows: SR 3.5.1.6 Verify isotopic concentration of B-10 in each accumulator is ≥ 19.9% (atom percent) [24 months OR In accordance with the Surveillance Frequency Control Program]
3.5.4-2	SR 3.5.4.4	RAI No.384, Question No.09.03.04-10 Added new SR as follows: SR 3.5.4.4 Verify isotopic concentration of B-10 in the RWSP is ≥ 19.9% (atom percent) [24 months OR In accordance with the Surveillance Frequency Control Program]
3.8.4-2	SR 3.8.4.2	Reflection of missing Rev.2 revision Replaced “800A” with “700A”.
Bases		
B3.5.1-2	BACKGROUND	RAI No.384, Question No.09.03.04-10 Added “The B-10 isotopic concentration of the reactor coolant in the RCS is depleted very slowly with reactor operation due to the neutron flux in the core. When the boron recycle subsystem is used, the reactor coolant containing depleted B-10 is recycled and returned to the RCS. After being recycled numerous times, the isotopic concentration of B-10 in the boric acid solution being returned to the RCS gradually decreases. During refueling outages, the reactor coolant in the RCS is mixed with the refueling water stored in the RWSP. With the repeated mixing of each cycle, the isotopic concentration of B-10 of the refueling water in the RWSP can gradually decrease over a long period of time. Since the RWSP water may be used to add water inventory to the accumulators, the isotopic B-10 concentration in the accumulators may also gradually decrease over a long period of time. The depleted B-10 of the boric acid solution in the accumulators can be recovered by increasing the overall boron concentration or the B-10 isotopic concentration itself. The requirement to verify the B-10 isotopic concentration is only required if the boron recycle subsystem is used.”

Page	Location (e.g., subsection with paragraph/sentence/ Item, table with column/row, or figure)	Description of Change
B3.5.1-5	APPLICABLE SAFETY ANALYSES	RAI No.384, Question No.09.03.04-10 Added "The safety analysis assumes that the boron has the isotopic concentration of B-10 found in natural boron (19.9 atom percent)." after the 4th sentence of the second paragraph. Added "The upper limit of boron concentration is not related to reactivity and is not dependent on the B-10 isotopic concentration." in the last of the second paragraph.
B3.5.1-11	SURVEILLANCE REQUIREMENTS	RAI No.384, Question No.09.03.04-10 Added "SR 3.5.1.6 Periodic verification every 24 months that the isotopic concentration of B-10 in each accumulator is ≥ 19.9% (atom percent) ensures that the B-10 isotopic concentration assumed in the accident analysis is available. [Since B-10 in the accumulators is not directly exposed to a significant neutron flux and the reactor coolant and RWSP water used as inventory for the accumulators is only mixed with the reactor coolant during outages, 24 months is considered conservative. OR The Surveillance Frequency is based on operating experience, equipment reliability, and plant risk and is controlled under the Surveillance Frequency Control Program.]
B3.5.4-2	BACKGROUND	RAI No.384, Question No.09.03.04-10 Added "The B-10 isotopic concentration of the reactor coolant in the RCS is depleted very slowly with reactor operation due to the neutron flux in the core. When the boron recycle subsystem is used, the reactor coolant containing depleted B-10 is recycled and returned to the RCS. After being recycled numerous times, the isotopic concentration of B-10 in the boric acid solution being returned to the RCS gradually decreases. During refueling outages, the reactor coolant in the RCS is mixed with the refueling water stored in the RWSP. With the repeated mixing of each cycle, the isotopic concentration of B-10 of the refueling water in the RWSP can gradually decrease over a long period of time. The depleted B-10 of the boric acid solution in the RWSP can be recovered by increasing the overall boron concentration or the B-10 isotopic concentration itself. The requirement to verify the B-10 isotopic concentration is only required if the boron recycle subsystem is used."

Page	Location (e.g., subsection with paragraph/sentence/ Item, table with column/row, or figure)	Description of Change
B3.5.4-2	APPLICABLE SAFETY ANALYSES	RAI No.384, Question No.09.03.04-10 Added “of 4000 ppm” in the 5th sentence of the second paragraph. Added “The safety analysis assumes that the boron has the isotopic concentration of B-10 found in natural boron (19.9 atom percent).” in the last of the second paragraph.
B3.5.4-3	APPLICABLE SAFETY ANALYSES	RAI No.384, Question No.09.03.04-10 Added “(at the natural B-10 isotopic concentration)” in the 1st sentence of the 1st paragraph. Added “The upper limit of boron concentration is not related to reactivity and is not dependent on the B-10 isotopic concentration.” in the last of the second paragraph.
B3.5.4-7	SURVEILLANCE REQUIREMENTS	RAI No.384, Question No.09.03.04-10 Added “SR 3.5.4.4 Periodic verification that the isotopic concentration of B-10 in the RWSP is ≥ 19.9% (atom percent) ensures that the B-10 isotopic concentration assumed in the accident analysis is available. [Since B-10 in the RWSP is not directly exposed to a significant neutron flux and the RWSP water is only mixed with the reactor coolant during outages, 24 months is considered conservative. OR The Surveillance Frequency is based on operating experience, equipment reliability, and plant risk and is controlled under the Surveillance Frequency Control Program.]”
B3.8.4-7	SR 3.8.4.2	Reflection of missing Rev.2 revision Replaced “800A” with “700A”.

SURVEILLANCE REQUIREMENTS (continued)

SURVEILLANCE		FREQUENCY
SR 3.5.1.6	Verify isotopic concentration of B-10 in each accumulator is ≥ 19.9% (atom percent).	[24 months OR In accordance with the Surveillance Frequency Control Program]

SURVEILLANCE REQUIREMENTS

SURVEILLANCE		FREQUENCY
SR 3.5.4.1	----------NOTE---------- Only required to be performed when containment air temperature is < 32°F or >120°F. ---------- Verify RWSP borated water temperature is ≥ 32°F and ≤ 120°F.	[24 hours OR In accordance with the Surveillance Frequency Control Program]
SR 3.5.4.2	Verify RWSP borated water volume is ≥ 583,340 gallons.	[7 days OR In accordance with the Surveillance Frequency Control Program]
SR 3.5.4.3	Verify RWSP boron concentration is ≥ 4000 ppm and ≤ 4200 ppm.	[7 days OR In accordance with the Surveillance Frequency Control Program]
SR 3.5.4.4	Verify isotopic concentration of B-10 in the RWSP is ≥ 19.9% (atom percent).	[24 hours OR In accordance with the Surveillance Frequency Control Program]

ACTIONS (continued)

CONDITION	REQUIRED ACTION	COMPLETION TIME
C. One of the required three dc electrical power subsystems inoperable for reasons other than Condition A or B.	C.1 Restore dc electrical power subsystems in three trains to OPERABLE status.	2 hours
D. Required Action and associated Completion Time not met.	D.1 Be in MODE 3. AND D.2 Be in MODE 5.	6 hours 36 hours

SURVEILLANCE REQUIREMENTS

SURVEILLANCE		FREQUENCY
SR 3.8.4.1	Verify battery terminal voltage is greater than or equal to the minimum established float voltage.	[7 days OR In accordance with the Surveillance Frequency Control Program]
SR 3.8.4.2	Verify each battery charger supplies ≥ ~~800~~ 700 amps at greater than or equal to the minimum established float voltage for ≥ 8 hours. OR Verify each battery charger can recharge the battery to the fully charged state within 24 hours while supplying the largest combined demands of the various continuous steady state loads, after a battery discharge to the bounding design basis event discharge state.	[24 months OR In accordance with the Surveillance Frequency Control Program]

BASES

BACKGROUND (continued)

The B-10 isotopic concentration of the reactor coolant in the RCS is depleted very slowly with reactor operation due to the neutron flux in the core. When the boron recycle subsystem is used, the reactor coolant containing depleted B-10 is recycled and returned to the RCS. After being recycled numerous times, the isotopic concentration of B-10 in the boric acid solution being returned to the RCS gradually decreases. During refueling outages, the reactor coolant in the RCS is mixed with the refueling water stored in the RWSP. With the repeated mixing of each cycle, the isotopic concentration of B-10 of the refueling water in the RWSP can gradually decrease over a long period of time. Since the RWSP water may be used to add water inventory to the accumulators, the isotopic B-10 concentration in the accumulators may also gradually decrease over a long period of time. The depleted B-10 of the boric acid solution in the accumulators can be recovered by increasing the overall boron concentration or the B-10 isotopic concentration itself. The requirement to verify the B-10 isotopic concentration is only required if the boron recycle subsystem is used.

APPLICABLE SAFETY ANALYSES

The accumulators are assumed OPERABLE in both the large and small break LOCA analyses at full power (Refs. 1 and 3). These are the Design Basis Accidents (DBAs) that establish the acceptance limits for the accumulators. Reference to the analyses for these DBAs is used to assess changes in the accumulators as they relate to the acceptance limits.

In performing the LOCA calculations, conservative assumptions are made concerning the availability of ECCS flow. In the early stages of a LOCA, with or without a loss of offsite power, the accumulators provide the sole source of makeup water to the RCS. The assumption of loss of offsite power is required by regulations and conservatively imposes a delay wherein the SI pumps cannot deliver flow until the Class 1E gas turbine generators start, come to rated speed, and go through their timed loading sequence. In cold leg break scenarios, the entire contents of one accumulator are assumed to be lost through the break.

The limiting large break LOCA is a double ended guillotine break at the discharge of the reactor coolant pump. During this event, the accumulators discharge to the RCS as soon as RCS pressure decreases to below accumulator pressure.

BASES

APPLICABLE SAFETY ANALYSES (continued)

As a conservative estimate, no credit is taken for SI pump flow until an effective delay has elapsed. This delay accounts for the Class 1E gas turbine generators starting and the pumps being loaded and delivering full flow. The delay time is conservatively set with an additional 2 seconds to account for SI signal generation. During this time, the accumulators are analyzed as providing the sole source of emergency core cooling. No operator action is assumed during the blowdown stage of a large break LOCA.

The worst case small break LOCA analyses also assume a time delay before pumped flow reaches the core. For the larger range of small breaks, the rate of blowdown is such that the increase in fuel clad temperature is terminated solely by the accumulators, with pumped flow then providing continued cooling. As break size decreases, the accumulators and safety injection pumps both play a part in terminating the rise in clad temperature. As break size continues to decrease, the role of the accumulators continues to decrease until they are not required and the safety injection pumps become solely responsible for terminating the temperature increase.

This LCO helps to ensure that the following acceptance criteria established for the ECCS by 10 CFR 50.46 (Ref. 2) will be met following a LOCA:

~~BASES~~

~~APPLICABLE SAFETY ANALYSES (continued)~~

a. Maximum fuel element cladding temperature is ≤ 2200°F,

b. Maximum cladding oxidation is ≤ 0.17 times the total cladding thickness before oxidation,

c. Maximum hydrogen generation from a zirconium water reaction is ≤ 0.01 times the hypothetical amount that would be generated if all of the metal in the cladding cylinders surrounding the fuel, excluding the cladding surrounding the plenum volume, were to react, and

d. Core is maintained in a coolable geometry.

Since the accumulators discharge during the blowdown phase and core reflooding phase of a LOCA, they do not contribute to the long term cooling requirements of 10 CFR 50.46.

The safety analysis assumes values of 19,338 gallons and 19,734 gallons.

BASES

APPLICABLE SAFETY ANALYSES (continued)

For both the large and small break LOCA analyses, a nominal contained accumulator water volume is used. The contained water volume is 3434 gallons larger than the deliverable volume for the accumulators, since the flow damper is near the bottom of the accumulators and the dead volume in each accumulator is 3434 gallons. For small breaks, an increase in water volume is a peak clad temperature penalty. For large breaks, an increase in water volume can be either a peak clad temperature penalty or benefit, depending on downcomer filling and subsequent spill through the break during the core reflooding portion of the transient. The safety analysis treats the volume of water from the accumulator to the RCS isolation check valves as accumulator injection line.

The minimum boron concentration setpoint is used in the post LOCA boron concentration calculation. The calculation is performed to assure reactor subcriticality in a post LOCA environment. Of particular interest is the large break LOCA, since no credit is taken for control rod assembly insertion. A reduction in the accumulator minimum boron concentration would produce a subsequent reduction in the available containment sump concentration for post LOCA shutdown and an increase in the maximum sump pH. The safety analysis assumes that the boron has the isotopic concentration of B-10 found in natural boron (19.9 atom percent). The maximum boron concentration is used in determining the cold leg to hot leg recirculation injection switchover time and minimum sump pH. The upper limit of boron concentration is not related to reactivity and is not dependent on the B-10 isotopic concentration.

~~BASES~~

~~APPLICABLE SAFETY ANALYSES (continued)~~

The large and small break LOCA analyses are performed at the minimum nitrogen cover pressure, since sensitivity analyses have demonstrated that higher nitrogen cover pressure results in a computed peak clad temperature benefit. The maximum nitrogen cover pressure limit prevents accumulator relief valve actuation, and ultimately preserves accumulator integrity.

The effects on containment mass and energy releases from the accumulators are accounted for in the appropriate analyses (Refs. 1 and 3).

The accumulators satisfy Criterion 3 of 10 CFR 50.36(c)(2)(ii).

BASES

LCO

The LCO establishes the minimum conditions required to ensure that the accumulators are available to accomplish their core cooling safety function following a LOCA. Four accumulators are required to ensure that 100% of the contents of three of the accumulators will reach the core during a LOCA. This is consistent with the assumption that the contents of one accumulator spill through the break. If less than three accumulators are injected during the blowdown phase of a LOCA, the ECCS acceptance criteria of 10 CFR 50.46 (Ref. 2) could be violated.

For an accumulator to be considered OPERABLE, the isolation valve must be fully open, power removed above 1920 psig, and the limits established in the SRs for contained volume, boron concentration, and nitrogen cover pressure must be met.

APPLICABILITY

In MODES 1 and 2, and in MODE 3 with RCS pressure > 1000 psig, the accumulator OPERABILITY requirements are based on full power operation. Although cooling requirements decrease as power decreases, the accumulators are still required to provide core cooling as long as elevated RCS pressures and temperatures exist.

This LCO is only applicable at pressures > 1000 psig. At pressures ≤ 1000 psig, the rate of RCS blowdown is such that the SI pumps can provide adequate injection to ensure that peak clad temperature remains below the 10 CFR 50.46 (Ref. 2) limit of 2200°F.

In MODE 3, with RCS pressure ≤ 1000 psig, and in MODES 4, 5, and 6, the accumulator motor operated isolation valves are closed to isolate the accumulators from the RCS. This allows RCS cooldown and depressurization without discharging the accumulators into the RCS or requiring depressurization of the accumulators.

BASES

SURVEILLANCE REQUIREMENTS (continued)

SR 3.5.1.6

Periodic verification every 24 months that the isotopic concentration of B-10 in each accumulator is ≥ 19.9% (atom percent) ensures that the B-10 isotopic concentration assumed in the accident analysis is available. [Since B-10 in the accumulators is not directly exposed to a significant neutron flux and the reactor coolant and RWSP water used as inventory for the accumulators is only mixed with the reactor coolant during outages, 24 months is considered conservative. OR The Surveillance Frequency is based on operating experience, equipment reliability, and plant risk and is controlled under the Surveillance Frequency Control Program.]

REFERENCES

1. Subsection 6.2.1.
2. 10 CFR 50.46.
3. Subsection 15.6.5.
4. Subsection 19.1.4.1.2.
5. NUREG-1366, February 1990.

BASES

BACKGROUND (continued)

The B-10 isotopic concentration of the reactor coolant in the RCS is depleted very slowly with reactor operation due to the neutron flux in the core. When the boron recycle subsystem is used, the reactor coolant containing depleted B-10 is recycled and returned to the RCS. After being recycled numerous times, the isotopic concentration of B-10 in the boric acid solution being returned to the RCS gradually decreases. During refueling outages, the reactor coolant in the RCS is mixed with the refueling water stored in the RWSP. With the repeated mixing of each cycle, the isotopic concentration of B-10 of the refueling water in the RWSP can gradually decrease over a long period of time. The depleted B-10 of the boric acid solution in the RWSP can be recovered by increasing the overall boron concentration or the B-10 isotopic concentration itself. The requirement to verify the B-10 isotopic concentration is only required if the boron recycle subsystem is used.

APPLICABLE SAFETY ANALYSES

During accident conditions, the RWSP provides a source of borated water to the SI and CS System pumps. As such, it provides containment cooling and depressurization, core cooling, and replacement inventory and is a source of negative reactivity for reactor shutdown (Refs. 1 and 2). The design basis transients and applicable safety analyses concerning each of these systems are discussed in the Applicable Safety Analyses section of B 3.5.2, "Safety Injection System (SIS) - Operating," B 3.5.3, " Safety Injection System (SIS) - Shutdown," and B 3.6.6, "Containment Spray Systems." These analyses are used to assess changes to the RWSP in order to evaluate their effects in relation to the acceptance limits in the analyses.

The RWSP must also meet volume, boron concentration, and temperature requirements for non-LOCA events. The volume is not an explicit assumption in non-LOCA events since the required volume is a small fraction of the available volume. The deliverable volume limit is set by the LOCA and containment analyses. For the RWSP, the deliverable volume is different from the total volume contained since, due to the design of the tank, more water can be contained than can be delivered. The minimum boron concentration of 4000 ppm is an explicit assumption in the main steam line break (MSLB) analysis to ensure the required shutdown capability. The safety analysis assumes that the boron has the isotopic concentration of B-10 found in natural boron (19.9 atom percent).

The maximum temperature is an assumption in the steam generator tube rupture analysis; the minimum is an assumption in the MSLB.

BASES

APPLICABLE SAFETY ANALYSES (continued)

For a large break LOCA analysis, the minimum water volume limit of 329,150 gallons and the lower boron concentration limit of 4000 ppm (at the natural B-10 isotopic concentration) are used to compute the post LOCA boron concentration necessary to assure subcriticality. To secure this minimum water volume in the accident, RWSP needs to store boric acid water ≥ 583,340 gallons during normal operation. This water volume also bounds the ECCS and CSS pump NPSH Requirements. The large break LOCA is the limiting case since the safety analysis assumes that all control rods are out of the core.

The upper limit on boron concentration of 4200 ppm is used to determine the maximum allowable time to switch to hot leg recirculation following a LOCA. The purpose of switching from direct vessel injection to hot leg injection is to avoid boron precipitation in the core following the accident. The upper limit of boron concentration is not related to reactivity and is not dependent on the B-10 isotopic concentration.

In the ECCS analysis, the containment spray temperature is assumed to be equal to the RWSP lower temperature limit of 32°F. If the lower temperature limit is violated, the containment spray further reduces containment pressure, which decreases the rate at which steam can be vented out the break and increases peak clad temperature. The upper temperature limit of 120°F is used in the small break LOCA analysis and containment OPERABILITY analysis. Exceeding this temperature will result in a higher peak clad temperature, because there is less heat

~~BASES~~

~~APPLICABLE SAFETY ANALYSES (continued)~~

transfer from the core to the injected water for the small break LOCA and higher containment pressures due to reduced containment spray cooling capacity. For the containment response following an MSLB, the lower limit on boron concentration and the upper limit on RWSP water temperature are used to maximize the total energy release to containment.

The RWSP satisfies Criterion 3 of 10 CFR 50.36(c)(2)(ii).

LCO

The RWSP ensures that an adequate supply of borated water is available to cool and depressurize the containment in the event of a Design Basis Accident (DBA), to cool and cover the core in the event of a LOCA, to maintain the reactor subcritical following a DBA, and to ensure adequate level to support SIS and CS/RHR pump operation.

To be considered OPERABLE, the RWSP must meet the water volume, boron concentration, and temperature limits established in the SRs.

BASES

APPLICABILITY

In MODES 1, 2, 3, and 4, RWSP OPERABILITY requirements are dictated by the SIS and Containment Spray System OPERABILITY requirements. Since both the SIS and the Containment Spray System must be OPERABLE in MODES 1, 2, 3, and 4, the RWSP must also be OPERABLE to support their operation. Core cooling requirements in MODE 5 are addressed by LCO 3.4.7, "RCS Loops - MODE 5, Loops Filled," and LCO 3.4.8, "RCS Loops - MODE 5, Loops Not Filled." MODE 6 core cooling requirements are addressed by LCO 3.9.5, "Residual Heat Removal (RHR) and Coolant Circulation - High Water Level," and LCO 3.9.6, "Residual Heat Removal (RHR) and Coolant Circulation - Low Water Level."

ACTIONS

A.1 [and A.2]

With RWSP boron concentration or borated water temperature not within limits, they must be returned to within limits within 8 hours. Under these conditions neither the SIS nor the Containment Spray System can perform its design function. Therefore, prompt action must be taken to restore the tank to OPERABLE condition. The 8 hour limit to restore the RWSP temperature or boron concentration to within limits was developed considering the time required to change either the boron concentration or temperature and the fact that the contents of the tank are still available for injection. [Required Action A.2 allows the option to apply the requirements of Specification 5.5.18 to determine a Risk Informed Completion Time. This Required Action is not applicable in MODE 4.]

BASES

SURVEILLANCE REQUIREMENTS (continued)

SR 3.5.4.2

The RWSP water volume should be verified to be above the required minimum level in order to ensure that a sufficient initial supply is available for injection and to support continued SI pump and CS/RHR pump operation on recirculation. [Since the RWSP volume is normally stable and is protected by an alarm, a 7 day Frequency is appropriate and has been shown to be acceptable through operating experience. OR The Surveillance Frequency is based on operating experience, equipment reliability, and plant risk and is controlled under the Surveillance Frequency Control Program.]

SR 3.5.4.3

The boron concentration of the RWSP should be verified to be within the required limits. This SR ensures that the reactor will remain subcritical following a LOCA. Further, it assures that the resulting RWSP pH will be maintained in an acceptable range so that boron precipitation in the core will not occur and the effect of chloride and caustic stress corrosion on mechanical systems and components will be minimized. [Since the RWSP volume is normally stable, a 7 day sampling Frequency to verify boron concentration is appropriate and has been shown to be acceptable through operating experience. OR The Surveillance Frequency is based on operating experience, equipment reliability, and plant risk and is controlled under the Surveillance Frequency Control Program.]

SR 3.5.4.4

Periodic verification that the isotopic concentration of B-10 in the RWSP is ≥ 19.9% (atom percent) ensures that the B-10 isotopic concentration assumed in the accident analysis is available. [Since B-10 in the RWSP is not directly exposed to a significant neutron flux and the RWSP water is only mixed with the reactor coolant during outages, 24 months is considered conservative. OR The Surveillance Frequency is based on operating experience, equipment reliability, and plant risk and is controlled under the Surveillance Frequency Control Program.]

REFERENCES

1. Subsection 6.2.2.

2. Subsection 15.6.5.

BASES

SURVEILLANCE REQUIREMENTS

SR 3.8.4.1

Verifying battery terminal voltage while on float charge helps to ensure the effectiveness of the battery chargers, which support the ability of the batteries to perform their intended function. Float charge is the condition in which the charger is supplying the continuous charge required to overcome the internal losses of a battery and maintain the battery in a fully charged state while supplying the continuous steady state loads of the associated dc subsystem. On float charge, battery cells will receive adequate current to optimally charge the battery. The voltage requirements are based on the nominal design voltage of the battery and are consistent with the minimum float voltage established by the battery manufacturer (2.17 Vpc or 130.2 V at the battery terminals). This voltage is controlled by administrative control. This voltage maintains the battery plates in a condition that supports maintaining the grid life (expected to be approximately 20 years). [The 7 day Frequency is consistent with manufacturer recommendations and IEEE-450 (Ref. 8). OR The Surveillance Frequency is based on operating experience, equipment reliability, and plant risk and is controlled under the Surveillance Frequency Control Program.]

SR 3.8.4.2

This SR verifies the design capacity of the battery chargers. According to Regulatory Guide 1.32 (Ref. 9), the battery charger supply is recommended to be based on the largest combined demands of the various steady state loads and the charging capacity to restore the battery from the design minimum charge state to the fully charged state, irrespective of the status of the unit during these demand occurrences. The minimum required amperes and duration ensure that these requirements can be satisfied.

This SR provides two options. One option requires that each battery charger be capable of supplying ~~800~~700 amps at the minimum established float voltage for 8 hours. The ampere requirements are based on the output rating of the chargers. The voltage requirements are based on the charger voltage level after a response to a loss of ac power. The time period is sufficient for the charger temperature to have stabilized and to have been maintained for at least 2 hours.

The other option requires that each battery charger be capable of recharging the battery after a service test coincident with supplying the largest coincident demands of the various continuous steady state loads (irrespective of the status of the plant during which these demands occur). This level of loading may not normally be available following the battery service test and will need to be supplemented with additional

Chapter 17

US-APWR DCD Chapter 17 Rev. 2, Tracking Report Rev. 3 Change List

Page	**Location** (e.g., subsection with paragraph/sentence/ item ,table with column/row, or figure)	**Description of Change**
17.4-35	Table 17.4-1 Sheet 29	RAI#528_19-412 Inserted the following five sensors as risk significant SSC. - Reactor coolant hot leg temperature sensor (wide range) (#22) - Reactor coolant cold leg temperature sensor (wide range) (#23) - Reactor coolant pressure sensor (#24) - Pressurizer water level sensor (#25) - RCS mid-loop water level sensor (Wide range) (#26)
17.4-38	Table 17.4-1 Sheet 32	RAI#528_19-413 Inserted #6 Presurizer spray line vent valve (RCS-VLV-153) as risk significant SSC.

Table 17.4-1 Risk-significant SSCs (sheet - 29 of 44)

#	Systems, Structures and Components (SSCs)	Rationale[1]	Failure Mode[2]	Insights and Assumptions
10	Pressurizer pressure sensor	RAW(L1-CC, L2-CC)	FF	
11	CS/RHR header pressure sensor	RAW(LP-CC)	FF	
12	Volume control tank water level sensor	RAW(LP-CC)	FF	
13	RWSP water level sensor	RAW(LP-CC)	FF	
14	RWSAT water level sensor	RAW(LP-CC)	FF	
15	RCS mid-loop water level sensor (Narrow range)	RAW(LP-CC)	FF	
16	RCS mid-loop water level sensor (Middle range)	RAW(LP-CC)	FF	
17	Containment pressure sensor (non-safety related)	RAW(L1,L2)	FF	
18	B-CCW surge tank water pressure transmitter [NCS-PICA-1212]	RAW(L2)	FF	
19	EFW pit water level transmitters [EFS-LT-060 (061, 070, 071)]	EJ*2	FF	
20	Ventilation chiller control cabinets	SM	FS	
21	Diverse actuation system	EJ FV(L1, L2) RAW(L1, L2)	FF	The unreliability of this system is assumed to be 0.01.
22	Reactor coolant hot leg temperature sensor (Wide range)	EJ	FF	These sensors are necessary to perform operator action.
23	Reactor coolant cold leg temperature sensor (Wide range)	EJ	FF	
24	Reactor coolant pressure sensor	EJ	FF	
25	Pressurizer water level sensor	EJ	FF	
26	RCS mid-loop water level sensor (Narrow range	EJ	FF	

Table 17.4-1 Risk-significant SSCs (sheet - 32 of 44)

#	Systems, Structures and Components (SSCs)	Rationale[1]	Failure Mode[2]	Insights and Assumptions
19	Pressurizer pressure control system part of emergency core cooling system (ECCS)			
1	Safety depressurization valves [RCS-MOV-117A(B)]	FV(FL1, FR1-CC, FR2, FR2-CC) RAW(L1-CC, L2-CC, FL1, FL1-CC, FR1, FR1-CC, FL2, FL2-CC, FR2, FR2-CC,)	OD	Safety Depressurization Valves (SDVs) are required to open during bleed and feed operation. Pressurizer safety valves releases RCS pressure in case of high RCS pressure. Failure of safety valves to re-close results in loss of primary coolant.
2	Safety depressurization valves [RCS-MOV-116 A(B)]	RAW(FL1, FL2, FR1, FR2)	CM, PR	
3	Pressurizer safety valves [RCS-VLV-120] [RCS-VLV-121] [RCS-VLV-122] [RCS-VLV-123]	RAW(L1, L2, FL1, FL2, FR1, FR2) SM	CD, FS	
4	Pressurizer [RCS-MTK-002]	SM	SS	
5	Pressurizer piping [TBD (Pressurizer safety valve piping, Pressurizer safety depressurization valve piping, Pressurizer spray piping)]	SM	SS	
6	Pressurizer spray line vent valve [RCS-VLV-153]	EJ	FC, IL, EL	
20	Depressurization system for severe accident			
1	Depressurization valves [RCS-MOV-118] [RCS-MOV-119]	FV(L2)	FC	In the case of core damage accident, depressurization of the reactor coolant system is required to prevent high pressure melt ejection and direct containment heating.

Chapter 18

Page	Location (e.g., subsection with paragraph/sentence/ Item, table with column/row, or figure)	Description of Change
18.2-3 18.2-4	Section 18.2.2.4 After first paragraph	RAI No.529, Question 18.-67 Add new paragraph: Within this context, technology refers to the human interface aspect of the technology, not the hardware or software. For example, the use of rear projection video technology or flat screen plasma or liquid crystal display technology would not affect the human interface. Therefore these are considered the same technology. Alternately, due to parallax issues, the use of infrared touch screen technology vs. surface acoustic touch screen technology would affect the human interface. Therefore these are considered human interface technology differences.

- The plant corrective action systems, operating logs, and maintenance logs from US plants currently operated by anticipated US-APWR licensees.

The following are the key differences between the standard Japanese PWR HSI and the HSI for the US-APWR:

- Arrangement of the main control room operator console to accommodate the change from one to two reactor operator stations
- Accommodating the change from two-train to four-train design
- HSI details to accommodate specific plant mechanical and electrical systems
- Japanese to English language conversion
- Metric to English units conversion
- Ergonomics changes to operator consoles to accommodate American personnel

The HFE design aspects incorporated in the US-APWR from previous or predecessor plant designs are clearly identified in the US-APWR operating experience review report. The HFE-related problem resolutions, including supporting analysis and corrective designs are provided. In addition, a discussion of positive HFE features that were identified, evaluated, and retained is provided.

18.2.2.3 Risk-Important Human Actions

The OER identifies risk-important HAs from the predecessor plants that are also applicable to the US-APWR. The OER provides justification for risk-important HAs from predecessor plants that are not applicable. The HAs are entered into the US-APWR issues tracking system to ensure they receive special attention during the design process to lessen their probability of occurrence.

18.2.2.4 HFE Technology

The OER addresses related HFE technology. For example, touch screen interfaces, large-screen wall panel displays, electronic maintenance tagging systems, and computerized procedures are utilized in the standard Japanese PWR HSI and the US-APWR HSI, as described in Reference 18.2-2. HFE issues associated with their use are reviewed, including HFE design aspects used in other industries. There are no technology differences between the standard Japanese PWR HSI and the US-APWR HSI.

Within this context, technology refers to the human interface aspect of the technology, not the hardware or software. For example, the use of rear projection video technology or flat screen plasma or liquid crystal display technology would not affect the human interface. Therefore these are considered the same technology. Alternately, due to parallax issues, the use of infrared touch screen technology vs. surface acoustic touch

screen technology would affect the human interface. Therefore these are considered human interface technology differences.

18.2.2.5 Recognized Industry Issues

The recognized industry issues contained in Reference 18.2-1 and issues subsequent to the publication of Reference 18.2-1 are addressed. These issues are organized into the following categories:

- Unresolved safety issues/generic safety issues
- Three Mile Island issues
- NRC generic letters and information notices
- Reports of the former NRC Office for Analysis and Evaluation of Operational Data
- Low power and shutdown operations
- Operating plant event reports

18.2.2.6 Issues Identified by Plant Personnel

Personnel interviews were conducted to determine operating experience related to predecessor plants or systems. Interview feedback was provided in the following topics areas:

- Plant Operations
  - Normal plant evolutions (e.g., startup, full power, and shutdown)
  - Instrument failures (e.g., safety-related system logic and control unit, fault tolerant controller (nuclear steam supply system), data network bus system, network bus controller, and break in data network line)
  - HSI equipment and processing failure (e.g., loss of video display units, loss of data processing, or loss of large overview display)
  - Transients (e.g., turbine trip, loss of offsite power, station blackout, loss of all feedwater, loss of service water, loss of power to selected buses or control room power supplies, and safety/relief valve transients)
  - Accidents (e.g., main steam line break, positive reactivity addition, control rod insertion at power, control rod ejection, anticipated transients without scram, and various-sized loss-of-coolant accidents)
  - Reactor shutdown and cooldown using remote shutdown system

Chapter 19

Page	Location (e.g., subsection with paragraph/sentence/ item ,table with column/row, or figure)	Description of Change
19.1-2	19.1.1.1 After the last sentence of third paragraph	RAI#564 19-425 Added the additional sentence "PRA was used to … to RMTS and SFCP."
19.1-2 and 19.1-3	19.1.1.1 After the last paragraph	RAI#564 19-424 Inserted the description regarding PRA application. "Information regarding LOCA … not result in significant increases in risk"
19.1-5	19.1.2.2 At the last sentence	RAI#564 19-426 Inserted "in design phase" at the end of the last sentence.
19.1-9	19.1.3.1 11th bullet (I&C system)	RAI #564 19-428 Inserted the description of I&C system.
19.1-36	19.1.4.1.2 Description of dominant accident sequence	RAI#564 19-427 Changed the criteria to identify the dominant accident sequences from 5% of total CDF to 1%.
19.1-36	19.1.4.1.2 Description of (4) LOOP with reactor trip	RAI#564 19-423 Changed the description of the fourth dominant accident sequence (LOOP with reactor trip) from "…, but CCWS pumps fail to restart and loss of CCW flow occurs." to "…, but CCWS fails to recover due to the unavailability of the CCW or ESW pumps to operate."
19.1-36 to 19.1-38	19.1.4.1.2 Description of dominant accident sequence	RAI#564 19-427 Incorporated the description of dominant accident sequences that contribute greater than 1% to the total CDF.

Page	Location (e.g., subsection with paragraph/sentence/ item ,table with column/row, or figure)	Description of Change
19.1-38	19.1.4.1.2 After the description of dominant accident sequences	RAI#564 19-427 Changed from “Table 19.1-27, Table 19.1-28 and Table 19.1-29” to “Table 19.1-27, Table 19.1-28, Table 19.1-29 and Table 19.1-131 through Table 19.1-140”
19.1-38	19.1.4.1.2 Results of importance analysis for FV importance	RAI #564 19-428 Changed the criteria to identify the risk significant basic events from “top five” to “basic event that has FV importance value equal or greater than 0.02”.
19.1-39 to 19.1-41	19.1.4.1.2 Results of importance analysis for FV importance	RAI #564 19-428 Inserted the description of risk significant basic event that has FV importance equal or greater than 0.02 after the fifth most significant basic event.
19.1-41	19.1.4.1.2 Results of importance analysis for RAW	RAI #564 19-428 Changed the criteria to identify the risk significant basic events from “the top five” to “basic event that has RAW equal or greater than 100”.
19.1-41	19.1.4.1.2 Results of importance analysis for RAW	RAI #564 19-428 Changed the description of the fourth and fifth risk significant basic events (ESPCF4CBSC52RAT-ALL and ESPCF4CBSC52UAT-ALL)
19.1-41 to 19.1-50	19.1.4.1.2 Results of importance analysis for RAW	RAI #564 19-428 Inserted the description of risk significant basic event that has RAW equal or greater than 100 after the fifth most significant basic event.
19.1-981	Table 19.1-119 Sheet 18	RAI#528 19-421 Added 5.4.7.2.3.6 and 7.6.1.7 into disposition of item 7 in LPSD assumptions.

Page	Location (e.g., subsection with paragraph/sentence/ item ,table with column/row, or figure)	Description of Change
19.1-1012 to 19.1-1049	Table 19.1-131 to Table 19.1-140	RAI#564 19-427 Inserted dominant cutsets of accident sequences that contribute greater than 1% to the total CDF.
19.1-1062 to 19.1-1065	Figure 19.1-1 Sheet 13 through Sheet 16 (Loss of Offsite Power)	RAI#564 19-423 Revised the ET heading identifier of initiating event LOOP to clarify the ET linking.
19.2-23	19.2.3.3.7 The last second paragraph	RAI#551 06.02.05-37 and RAI#553 06.02.04-53 Inserted “Detailed evaluation … are following.” and deleted the after second sentence in the paragraph.
19.2-23 to 19.2-25	19.2.3.3.7 After the last second paragraph	RAI#551 06.02.05-37 and RAI#553 06.02.04-53 Inserted “(1) Containment … in procurement documents.”
19.2-25	19.2.3.3.7 Last paragraph	RAI#551 06.02.05-37 and RAI#553 06.02.04-53 Changed the last paragraph to “Existing experiments and … the US-APWR equipment survivability.”
19.2-50	Table 19.2-1 Note 4	RAI#551 06.02.05-37 and RAI#553 06.02.04-53 Revised Note 4 for table caption to reflect this RAI.
19.3-1	19.3.3 COL action item COL 19.3(1)	RAI#564 19-426 Added “Peer review for the updated PRA … risk-informed applications.” after the last sentence of COL action item COL 19.3(1).
19A-4	19A.6	RAI#566 19-429 Remove the topical report Reference 19A-3 from main text and reference list.

The Level 2 PRA results in LRFs for internal events at full power and the evaluation involves the following:

- Plant damage state (PDS) analysis
- Accident progression analysis
- Quantification

The primary guidance for this analysis is ASME RA-S-2002 and addenda, NUREG/CR-2300, and RG 1.200 (Reference 19.1-1, 19.1-2, 19.1-3, 19.1-4, 19.1-9). MAAP version 4.0.6 (Reference 19.1-10) is employed to evaluate severe accident phenomena.

The Level 2 evaluation of the flooding and fire external events at full-power conditions is based on the same approach as for internal events. Fault trees are modified to take into account flood/fire induced failures of severe accident mitigation features and these fault trees are mapped into the internal events through the associated PDSs.

For events at LPSD, the LRFs are conservatively assumed to be the same as the core damage frequencies, with a simple bounding technique.

19.1.1 Uses and Applications of the PRA

19.1.1.1 Design Phase

The US-APWR PRA is an integral part of the design process and has been used to optimize the plant design with respect to safety. The PRA models and results have influenced the selection of design alternatives such as four train core cooling systems, an in-containment refueling water storage pit (RWSP), and full digital instrumentation and control (I&C) systems.

The US-APWR is expected to perform better than current operating plants in the area of severe accident performance since prevention and mitigation of severe accidents have been addressed during the design stage, taking advantage of PRA results and severe accident analysis. The PRA results indicate that the US-APWR design results in a low level of risk and meets the CDF, LRF, and containment performance goals for new generation pressurized water reactors (PWRs).

At the design phase, the PRA results have been used as information providing input to technical specifications (Chapter 16), RAP (Chapter 17, Section 17.4), the security plan, and other design areas. PRA insights are utilized to develop risk-managed technical specifications (RMTS) and surveillance frequency control program (SFCP) in accordance with Reference 19.1-11 and 19.1-44, respectively. PRA was used to determine the components and instruments that would be subjected to RMTS and SFCP.

Information regarding LOCA scenarios followed by failures of accumulators and the risk impact of accumulator unavailability were used to confirm the applicability of standard technical specification requirements to the US-APWR design so the applicability of standard technical specification were considered applicable to the US-APWR design.

Sensitivity analysis results regarding reliability of the protection and safety monitoring system (PSMS) were used to confirm the completion time and surveillance frequencies in the US-APWR technical specification are sufficient not to degrade plant safety. Sensitivity analysis results showed that the changes from the standard technical specification, increases in surveillance frequencies, would not result in significant increase in risk.

19.1.1.2 Combined License Application Phase

19.1.1.2.1 Uses of Probabilistic Risk Assessment in Support of Licensee Programs

The PRA in the COLA phase will be used to support licensee programs such as the human factors engineering program (Chapter 18) and the severe accident management program. The PRA in the COLA phase will also be utilized to support implementation of 10 CFR 50.65 (Reference 19.1-12), the maintenance rule, and the technical specification as well as the reactor oversight process including the mitigating systems performance index and the significance determination process.

The PRA may require updating to assess site-specific information (e.g., ultimate heat sink) and associated site-specific external events (high winds and tornadoes, external floods, transportation, and nearby facility accidents).

19.1.1.2.2 Risk-Informed Applications

As discussed in Subsection 19.1.1.1, PRA insights are utilized to develop site-specific risk-managed technical specifications, RAP, and other risk-informed applications.

19.1.1.3 Construction Phase

The PRA may require updating during the construction phase to reflect site-specific characteristics or design changes. The PRA may also be used to support licensee programs or risk-informed applications as appropriate.

19.1.1.3.1 Uses of Probabilistic Risk Assessment in Support of Licensee Programs

The PRA in the construction phase will be used to support licensee programs such as the human factors engineering program (Chapter 18) and the severe accident management program.

19.1.1.3.2 Risk-Informed Applications

The updated PRA will be reflected to risk-informed applications currently planned for implementation during the construction phase.

19.1.2.2 PRA Level of Detail

The US-APWR realistically reflects the actual plant design, planned construction, anticipated operational practices, and relevant operational experience. The approach, methods, data, and computer codes that are used, as documented throughout this chapter, are compliant with industry standard codes and practices. The level of detail is sufficient to ensure that the impacts of designed-in dependencies are correctly captured. The level of detail of the PRA is sufficient to provide confidence in the results such that the PRA may be used in regulatory decision-making to support risk-informed applications in design phase.

19.1.2.3 PRA Technical Adequacy

The quality of the methodologies, processes, analyses, and personnel associated with the US-APWR PRA comply with the provisions for nuclear plant quality assurance. Toward this end, the US-APWR PRA adheres to the recommendations provided in RG 1.200 pertaining to quality and technical adequacy. The US-APWR incorporates the technical elements of an acceptable PRA shown in Table 1 of RG 1.200 (Reference 19.1-9), and is consistent with the technical characteristics and attributes given in Tables 2 and 3 of RG 1.200, entitled "Summary of Technical Characteristics and Attributes of a PRA," and "Summary of Technical Characteristics and Attributes of an Internal Flood and Fire Analysis and External Hazards Analysis," respectively. The PRA has been developed in accordance with industry consensus standards as described in Section 19.0, and has been subjected to a peer review process as defined in ASME-RA-S-2002 and associated addenda (Reference 19.1-1, 19.1-2, 19.1-3) and as outlined in the Nuclear Energy Institute (NEI) peer review guide (Reference 19.1-14).

19.1.2.4 PRA Maintenance And Upgrade

The objective of the PRA maintenance and upgrade program is to ensure that the PRA will be maintained and upgraded so that its representation of the as designed, as-to-be built, and as-to-be operated plant is sufficient to support the applications for which the PRA is being used. The PRA will be under configuration control and the program will contain the following key elements:

- A process for monitoring PRA inputs and collecting new information
- A process that maintains and upgrades the PRA to be consistent with the as-built, as-operated plant
- A process that ensures that the cumulative impact of pending changes is considered when applying the PRA
- A process that evaluates the impact of changes on previously implemented risk-informed decisions that have used the PRA
- A process that maintains configuration control of computer codes used to support PRA quantification
- Documentation of the program

- Main steam isolation (Chapter 10, Section 10.3)

  MSIVs are installed in each of the main steam lines to (1) limit uncontrolled steam release from one steam generator in the event of a steam line break, and to (2) isolate the faulted SG in the event of SGTR. These functions are addressed in the ET of at power Level 1 model discussed in Subsection 19.1.4.1.1.

- Component cooling water (Chapter 9, Subsection 9.2.2)

  The CCW system provides cooling water required for various components during all plant operating conditions, including normal plant operating, abnormal and accident conditions. During plant operation, CCW provides cooling water for the thermal barrier of the RCP to maintain RCP seal integrity. The CCW also functions as the heat sink for the CS/RHR system as well as the alternate containment cooling. These functions are addressed in the Level 1 model discussed in Subsection 19.1.4.1.1 and Subsection 19.1.6.1.

- Gas turbine generators (Chapter 8, Section 8.3)

  Four class 1E gas turbine generators (GTGs) are provided to supply power to their dedicated class 1E bus as a counter measure against loss of offsite power. When loss of offsite power occurs, GTGs automatically start and would accept load in less than or equal to 100 seconds after receiving the start signal. This function is addressed in the ET of Level 1 model discussed in Subsection 19.1.4.1.1 and Subsection 19.1.6.1.

- I&C System (Chapter 7, Section 7.1)

  The I&C system consists of the safety-related protection and safety monitoring system (PSMS), the non safety-related plant control and monitoring system (PCMS), and the non safety-related diverse actuation system (DAS). The Das monitors and controls safety and non-safety systems, required to cope with anticipated operational occurrences and postulated accidents concurrent with a common cause failure the disables all functions of the PSMS and PCMS. These functions are addressed in the ET and FTs of Level 1 PRA model discussed in Subsection 19.1.4.1.1 and Subsection 19.1.6.1.

The following non-safety systems are also considered key preventive features:

- Alternate containment cooling (Chapter 9, Subsection 9.4.6)

  In the case of the loss of containment cooling at accident conditions, alternate containment cooling utilizing containment fan cooler system is performed by connecting the component cooling water (CCW) system to the containment fan cooler system. Alternate containment cooling provides long term C/V cooling by natural convection in C/V. This function is addressed in the ET of at power Level 1 model discussed in Subsection 19.1.4.1.1.

- Alternate ac power source (Chapter 8, Subsection 8.4.1.3)

65% of the CDF are related with accident scenarios involving RCP seal LOCA. RCP seal LOCA may occur due to total loss of CCW, which can be caused by total loss of ac power, random failures of ESWS and CCWS after plant trip or an initiating event. If operations to provide alternate component cooling water supply to charging pumps fail, RCP seal LOCA will occur. In such accident scenarios, safety functions to mitigate RCP LOCA are unavailable, and therefore the core will be damaged.

The dominant accident sequences (those contributing greater than ~~5~~1% to CDF) are described below:

(1) LOOP with reactor trip: The emergency power supply system (emergency power generator) and alternative ac power source fail to operate and loss of total ac power occurs. EFWS (turbine-driven pumps) succeeds. Offsite power does not recover within one hour, and RCP seal LOCA occurs since RCP seal cooling and RCP seal injection is lost during loss of total ac power. In addition, functions to mitigate RCP seal LOCA are also unavailable due to loss of power. Liquid level in the RCS decreases, and two hours after initiation of RCP seal LOCA (three hours after LOOP), core is uncovered. The frequency of this sequence is 3.4E-07/RY and accounts for 32.9 % of the total CDF.

(2) LOCCW with reactor trip: EFWS successfully functions, but RCP seal LOCA occurs due to failure of the alternate component cooling of the charging pump utilizing FSS or non-essential chilled water system. In addition, functions to mitigate RCP seal LOCA are also unavailable due to loss of CCW. RCS inventory gradually decreases, and finally the core is damaged. The frequency of this sequence is 1.7E-07/RY and accounts for 15.9 % of the total CDF.

(3) Reactor vessel rupture: This event directly leads to core damage since the reactor vessel can no longer maintain RCS coolant inside. The frequency of this sequence is 1.0E-07/RY and accounts for 9.7 % of the total CDF.

(4) LOOP with reactor trip: Emergency power supply and EFWS successfully function, but ~~CCWS pumps fail to restart and loss of CCW flow occurs~~ CCWS fails to recover due to the unavailability of the CCW or ESW pumps to operate. Alternate component cooling of charging pump utilizing FSS or non-essential chilled water system fails and eventually RCP seal LOCA occurs. In addition, functions to mitigate RCP seal LOCA are unavailable due to loss of CCW. RCS inventory gradually decreases, and finally the core is damaged. The frequency of this sequence is 9.0E-08/RY and accounts for 8.7 % of the total CDF.

(5) LOCCW with reactor trip: All safety-related equipment cooled by the CCWS (e.g., SI pumps, CS/RHR pumps and CS/RHR heat exchangers) is unavailable due to the total loss of CCW. Since the motor-driven (M/D) EFW pumps, that share cooling function with the heating, ventilation, and air conditioning system through ESWS are also not available, only turbine-driven (T/D) pumps are operable for cooling under the initiating event. Water in two EFW pits cannot not be supplied to the SGs by available T/D pumps, and there are no cooling systems that can prevent core damage. In addition, there are no RCP seal cooling functions, which results in a RCP seal LOCA. Eventually, the core is damaged. The frequency of this sequence is 4.0E-08/RY and accounts for 3.8% of the total CDF.

(6) SLOCA with reactor trip: The decay heat removal function via the SGs is successful, but the high head injection system and CSS/RHRS are unavailable, since the RWSP is unavailable due to plugging or leaking. There are no systems that can inject water from the RWSP into the reactor vessel. Eventually, core damage occurs. The frequency of this sequence is 3.9E-08/RY and accounts for 3.8% of the total CDF.

(7) LOFF with reactor trip: The RCS cannot be depressurized because of the failure of both the decay heat removal function via the SGs and the manual feed and bleed operation. The pressure in the RCS remains high, which results in the core damage. The frequency of this sequence is 2.5E-08/RY and accounts for 2.4% of the total CDF.

(8) SLBO with reactor trip: The function of secondary side cooling through the SGs is unavailable due to the failure of isolation on the break side. In addition, operators fail to manually open the safety depressurization valve, and the RCS cannot be depressurized. The pressure in the RCS keeps increasing, which results in the core damage. The frequency of this sequence is 2.4E-08/RY and accounts for 2.3% of the total CDF.

(9) Without reactor trip: Neither the DAS nor the reactor trip signal function properly, which results in the failure of the reactor and the turbine to trip, which causes the initiating event. Since core power cannot be effectively decreased, the RCS pressure exceeds the allowable RCS system pressure limit. Eventually, the core is damaged. The frequency of this sequence is 2.4E-08/RY and accounts for 2.3% of the total CDF.

(10) TRANS with reactor trip: The RCS cannot be depressurized by secondary side cooling due to the failure of the EFWS and main feedwater recovery. In addition, operators fail to manually start the SI pump and open the safety depressurization valve. There are no means to depressurize the RCS, and the pressure in the primary system keeps increasing. Eventually, the core is damaged. The frequency of this sequence is 1.7E-08/RY and accounts for 1.7% of the total CDF.

(11) SLOCA with reactor trip: The removal of decay heat from the RCS via the SGs functions successfully. The high head injection system fails to actuate by the CCF of the SI pumps to operate, but the accumulator injection system can supply the coolant into the reactor vessel. Since operators fail to manually open the main steam depressurization valves, secondary side cooling is insufficient to depressurize the RCS, which results in the core damage. The frequency of this sequence is 1.2E-08/RY and accounts for 1.2% of the total CDF.

(12) Without reactor trip: The reactor trip function fails to actuate because of the rod injection failure, which results in the initiating event. One EFW train is unavailable due to a random failure or testing and maintenance, and cooling from the secondary side is insufficient. RCS pressure cannot be reduced down to allowable pressures. Immediately, the core damage occurs. The frequency of this sequence is 1.2E-08/RY and accounts for 1.2% of the total CDF.

(13) LOOP with reactor trip: The emergency power supply system functions successfully. Recovery of the CCWS prevents a RCP seal LOCA. However, the RCS cannot be depressurized, since the cooling from the primary side (manually open the safety depressurization valves and start the SI pumps) and from the secondary side (the removal of decay heat via the SGs) is unavailable. Eventually, the core is damaged. The frequency of this sequence is 1.1E-08/RY and accounts for 1.1% of the total CDF.

(14) SLOCA with reactor trip: All decay heat removal via the SGs, injection from RWSP by the SI pumps and containment spray by the CS/RHR pump are available. However, there is no heat removal provided by the RWSP, since the CS/RHR heat exchanger is unavailable due to the CCF of four CS/RHR heat exchanger cooling water outlet valves to open. In addition, alternate containment cooling function is inoperable. This scenario implies containment failure before core damage. Eventually, the core damage occurs. The frequency of this sequence is 1.0E-08/RY and accounts for 1.0% of the total CDF.

The top 20 cutsets for these sequences are shown in Table 19.1-27, Table 19.1-28, ~~and~~ Table 19.1-29 and Table 19.1-131 through Table 19.1-140. Each of the other event sequences represents less than 5% of the total CDF. Cutsets for the reactor vessel rupture event are not listed here because the initiating event is assumed to directly lead to core damage.

Importance analyses have been performed to determine the following:

- Basic event importance
- CCF importance
- Human error importance
- Component importance

The results of importance are organized by a Fussell Vesely (FV) importance and risk achievement worth (RAW). Risk significant basic events which have FV importance equal or greater than 0.005 and RAW equal or greater than 2.0 are listed in Table 19.1-30 and Table 19.1-31, respectively.

~~The top five most significant basic events, based on the FV importance,~~ The risk significant basic events with FV importance value with 0.02 or higher are as follows:

OPS----PRBF (Failure of offsite power recovery within one hour) – This basic event applies only to a condition where total loss of ac power occurs after LOOP. If offsite power does not recover within one hour, RCP seal LOCA is assumed to occur. The plant CDF is decreased by a factor of 34% if the probability of this failure is set to 0.0.

OPS---- PRCF (Failure of offsite power recovery within three hour) – This basic event applies only to condition where total loss of ac power occurs after LOOP. If offsite power does not recover within three hours, core damage is assumed to occur due to RCP seal

LOCA. The plant CDF is decreased by a factor of 33% if the probability of this failure is set to 0.0.

EPSOO02RDG (Fail to connect alternate ac to class 1E bus) - This basic event applies only to SBO conditions where the emergency power generators have failed to supply power. If the operator fails to connect alternate ac power to class 1E buses, total loss of ac power occurs. The plant CDF is decreased by a factor of 29% if the probability of this failure is set to 0.0.

EPSCF4DLLRDG-ALL (CCF of class 1E emergency power generators to run for the first hour) – This basic event applies to LOOP conditions. When all class 1E emergency power generators fail to run, the operator will attempt to connect the alternate ac power source to the safety buses. If the operator fails to connect the alternate ac power source, total loss of ac power occurs. The plant CDF is decreased by a factor of 22% if the probability of this failure is set to 0.0.

ACWOO02FS (Fail to supply alternate component cooling water from FSS) - This basic event applies to conditions where loss of CCW has occurred. If the operator fails to supply alternate component cooling water to the charging pump cooling line, RCP seal injection function is lost. Eventually, RCP seal LOCA occurs. The plant CDF is decreased by a factor of 18% if the probability of this failure is set to 0.0.

ACWOO02CT (Fail to supply alternate component cooling water from non-essential chilled water system) – This basic event applies to conditions where loss of component cooling water (CCW) has occurred. If the operator fails to supply alternate CCW to the charging pump cooling line, RCP seal injection function is lost. Eventually, a RCP seal LOCA occurs. The plant CDF is decreased by a factor of 17%, if the probability of this failure is set to 0.0.

EFWOO01006AB (Fail to changeover emergency feedwater pit) – This basic event applies to the condition where one side (failure of A and B trains or C and D trains) of the emergency feedwater system (EFWS) has failed. Each EFW pit has 50% capacity. When the EFWS on one side is not available, the operator attempts to supply water to the EFW pit on the other available side after the water level in the pit indicates low. If the operator fails to changeover the EFW pit, the decay heat removal function for the secondary side will be lost. The plant CDF is decreased by a factor of 5.2%, if the probability of this failure is set to 0.0.

EPSCF4DLADDG-ALL (CCF of Class 1E emergency power generation to start) – This basic event applies to a loss of offsite power (LOOP) condition. When all Class 1E emergency power generators fail to start, the operator attempts to connect the alternate ac power source to Class 1E buses A and D. If the operator fails to connect the alternate ac power source after the CCF, a total loss of ac power will occur. The plant CDF is decreased by a factor of 4.6%, if the probability of this failure is set to 0.0.

HPIOO02FWBD (Failure of feed and bleed operation not involving ECCS actuation signal) – This basic event applies to conditions where the secondary side cooling function has been lost, and not involving the emergency core cooling system (ECCS) actuation signal. When secondary side cooling is not available, the operator attempts to manually start the safety injection (SI) pump and open the safety depressurization valves

(SDVs) for RCS depressurization (feed and bleed operation). If the operator fails, the RCP pressure will remain high. The plant CDF is decreased by a factor of 4.2%, if the probability of this failure is set to 0.0.

RWSCF4SUPR001-ALL (CCF of ESS/CS strainer plug during operation) – This basic event applies to the loss of the high head injection system (HHIS) and containment spray system/residual heat removal system (CSS/RHRS). These systems are shared with the refueling water storage pit (RWSP) through the ESS/CS strainers. If the strainers are plugged, these systems become unavailable. The plant CDF is decreased by a factor of 3.9%, if the probability of this failure is set to 0.0.

SGNBTSWCCF2 (CCF of group-2 application software) – This basic event applies to the operation of systems important to safety. If this software CCF occurs, the safety-related signals will be actuated. Systems important to safety, such as high head injection system (HHIS) and CSS/RHRS become inoperable. The plant CDF is decreased by a factor of 3.7%, if the probability of this failure is set to 0.0.

EPSCF4DLSRDG-ALL (CCF of Class 1E emergency power generation to run for the first hour) – This basic event applies to LOOP conditions. When all Class 1E emergency power generators fail to run, the operator will attempt to connect the alternate ac power source to Class 1E buses A and D. If the operator fails to connect the alternate ac power source after the CCF, a total loss of ac power will occur. The plant CDF is decreased by a factor of 3.4%, if the probability of this failure is set to 0.0.

RTPDASF (Failure of diverse actuation system) – This basic event applies to the loss of the diverse actuation system (DAS). If a DAS failure occurs, safety-related equipment (e.g., reactor trip, SI pump, SDV, EFW pump) will be unavailable. The plant CDF is decreased by a factor of 3.0%, if the probability of this failure is set to 0.0.

SGNBTHWCCF (CCF of safety-related I&C hardware) – This basic event applies to safety related I&C hardware, which includes reactor protection system (RPS), engineered safety feature actuation system (ESFAS) and safety logic system (SLS). If the hardware CCF occurs, safety-related signals will not operate. The plant CDF is decreased by a factor of 2.9%, if the probability of this failure is set to 0.0.

EFWPTAD001A (Failure of turbine-driven EFW pump to start) – This basic event applies to conditions where the turbine-driven EFW pump fails to start. If the motor-driven pump in the same train is inoperable, the operator will perform a changeover to the EFW pit. The plant CDF is decreased by a factor of 2.2%, if the probability of this failure is set to 0.0.

EPSCF2DLLRDGP-ALL (CCF of alternate ac power generator to run) – This basic event applies to LOOP conditions. When all Class 1E emergency power generators fail to operate, the operator will attempt to connect the alternate ac power source to Class 1E buses A and D. If, alternate ac power generators fail to run, a total loss of ac power will occur. The plant CDF is decreased by a factor of 2.1%, if the probability of this failure is set to 0.0.

HPIOO02FWBD-S (Failure of feed and bleed operation involving ECCS actuation signal) – This basic event applies to a condition where the secondary side cooling

function has been lost, involving the ECCS actuation signal. When secondary side cooling is not available, the operator attempts to manually open the safety depressurization valves for RCS depressurization (bleed operation). If the operator fails, RCP pressure will remain high. The plant CDF is decreased by a factor of 2.1%, if the probability of this failure is set to 0.0.

~~The top five most significant basic events, based on the RAW,~~The risk significant basic events with RAW values with 100 or higher in which the basic events of external leaking of piping are excluded and the CCF basic events that represent various combination are treated as one basic event, are as follows:

RTPCRDF (Rod injection failure of more than four rods mechanical failure of the control rod driving mechanism) - The plant CDF would increase approximately 1.7E+05 times if the probability of this failure were set to 1.0. If more than four control rods fail to drop into the core, control rods cannot provide sufficient negative reactivity to trip the plant.

RTPBTSWCCF (CCF of basic software) - The plant CDF would increase approximately 4.6E+04 times if the probability of this failure were set to 1.0. The importance of this failure is due to loss of all digital instruments which will result in failure of various signals including plant trip signal and emergency core cooling system actuation signal.

SGNBTHWCCF (CCF of safety related I&C hardware) - The plant CDF would increase approximately 1.4E+04 times if the probability of this failure were set to 1.0. The importance of this failure is due to loss of all trains of the plant safety and monitoring system which will result in failure of various safety related signals including plant trip signal and emergency core cooling system actuation signal.

EPSCF4CBSC52UAT-ALL (CCF of all incoming breakers from the unit auxiliary transformer) - The plant would increase approximately 8.5E+03 times if the probability of this failure were set to 1.0. If this the incoming breakers all spuriously ~~open~~ close after LOOP, class 1E buses cannot be supplied power since the buses are not isolated from the faulted offsite power. Accordingly, loss of total ac power will occur.

EPSCF4CBSC52RAT-ALL (CCF of all incoming breakers from the reserve auxiliary transformer) - The plant would increase approximately 8.5E+03 times if the probability of this failure were set to 1.0. If this the incoming breakers all spuriously ~~open~~ close after LOOP, class 1E buses cannot be supplied power since the buses are not isolated from the faulted offsite power. Accordingly, loss of total ac power will occur.

SWSCF4PMYR-FF (CCF of essential service water pumps to run for the operation) – The plant CDF would increase approximately 6.2E+03 times if the probability of this failure were set to 1.0. If all essential service water (ESW) pumps fail to run, total loss of CCW will occurs. In addition, heating, ventilation and air conditioning system (HVAC) for motor-driven EFW pump room is unavailable.

EPSCF4CBSO52STH-ALL (CCF of breakers between Class 1E 6.9 kV bus and Class 1E transformer spurious opening) – The plant CDF would increase approximately 6.1E+03 times if the probability of this failure were set to 1.0. If these breakers spuriously

open, Class 1E 480V load centers and motor control centers will not be supplied power and are unavailable.

EPSCF4CBSO52STL-ALL (CCF of Breakers between class 1E transformer and class 1E 480V load center spurious opening) – The plant CDF would increase approximately 6.1E+03 times if the probability of this failure were set to 1.0. If these breakers spuriously open, class 1E 480V load centers and motor control centers will not be supplied power and are unavailable.

CWSCF4RHPR-FF (CCF of component cooling water heat exchanger plug and foul) – The plant CDF would increase approximately 5.8E+03 times if the probability of this failure were set to 1.0. If this CCF occurs, no safety-related systems cooled by CCWS (i.e., HHIS and CSS/RHRS) are operable.

CWSCF4PCYR-FF (CCF of component cooling water pumps to run for the operation) – The plant CDF would increase approximately 5.8E+03 times if the probability of this failure were set to 1.0. If all CCW pumps fail to run, CCWS will be unavailable, no safety-related systems cooled by CCWS (i.e., HHIS and CSS/RHRS) are operable.

EPSCF4CBSO52LC-ALL (CCF of breakers between Class 1E 480V load center and Class 1E 480V motor control center spurious opening) – The plant CDF would increase approximately 4.6E+03 times if the probability of this failure were set to 1.0. If these breakers spuriously open, Class 1E motor control centers cannot be supplied power and are unavailable.

RWSCF4SURP001-ALL (CCF of ESS/CS strainer plug during operation) – The plant CDF would increase approximately 4.0E+03 times if the probability of this failure were set to 1.0. If this CCF occurs, there are no available systems that share with RWSP through ESS/CS strainers (i.e., HHIS and CSS/RHRS).

RWSXVEL001 (External leak of refueling water storage pit outlet line manual valve) – The plant CDF would increase approximately 4.0E+03 times if the probability of this failure were set to 1.0. If this basic event occurs, there are no available systems that share with RWSP (i.e., HHIS and CSS/RHRS).

RWSXVEL024 (External leak of refueling water storage pit return line manual valve) – The plant CDF would increase approximately 4.0E+03 times if the probability of this failure were set to 1.0. If this basic event occurs, there are no available systems that share with RWSP (i.e., HHIS and CSS/RHRS).

RWSCVEL023 (External leak of refueling water storage pit return line check valve) – The plant CDF would increase approximately 4.0E+03 times if the probability of this failure were set to 1.0. If this basic event occurs, there are no available systems that share with RWSP (i.e., HHIS and CSS/RHRS).

RWSMVEL002 (External leak of refueling water storage pit outlet line motor-operated valve) – The plant CDF would increase approximately 4.0E+03 times if the probability of this failure were set to 1.0. If this basic event occurs, there are no available systems that share with RWSP (i.e., HHIS and CSS/RHRS).

RWSTNEL001 (External leak of refueling water storage pit) – The plant CDF would increase approximately 4.0E+03 times if the probability of this failure were set to 1.0. If this basic event occurs, there are no available systems that share with RWSP (i.e., HHIS and CSS/RHRS).

HPIMVEL001A/B/C/D (External leak of safety injection pump inlet line motor-operated valve) – The plant CDF would increase approximately 4.0E+03 times if the probability of this failure were set to 1.0. Since the valve is at the exit of RWSP, if the basic event occurs, the coolant will drain out from the RWSP. Then, the systems sharing with RWSP are unavailable.

RSSMVELCSS001A/B/C/D (External leak of containment spray/residual heat removal pump inlet line motor-operated valve) – The plant CDF would increase approximately 4.0E+03 times if the probability of this failure were set to 1.0. Since the valve is at the exit of RWSP, if the basic event occurs, the coolant will drain out from the RWSP. Then, the systems sharing with RWSP are unavailable.

SGNBTSWCCF2 (CCF of group-2 application software) – The plant CDF would increase approximately 3.7E+03 times if the probability of this failure were set to 1.0. If this software CCF occurs, safety-related signals will be actuated. Almost safety-related systems such as HHIS and CSS/RHRS cannot be operable.

RTPCF4AXFFRT-ALL (CCF of reactor trip breaker to open) – The plant CDF would increase approximately 1.9E+03 times if the probability of this failure were set to 1.0. If these breakers fail to operate under the DAS failure, reactor trip cannot be achieved, which results in occurrence of anticipated transient without scram (ATWS).

EPSCBFO52RAT-ACD (CCF of all incoming breakers from the reserve auxiliary transformer to open) – The plant CDF would increase approximately 1.6E+03 times if the probability of this failure were set to 1.0. If these breakers fail to open after LOOP, the ac Class 1E buses will be isolated from the fault offsite power, which results in loss of ac power.

EPSCBFO52UAT-ACD (CCF of all incoming breakers from the unit auxiliary transformer to open) – The plant CDF would increase approximately 1.6E+03 times if the probability of this failure were set to 1.0. If these breakers fail to open after LOOP, the ac Class 1E buses will be isolated from the fault offsite power, which results in loss of ac power.

RTPCF4ICYRRT7001-ALL (CCF of SG water level sensor) – The plant CDF would increase approximately 1.5E+03 times if the probability of this failure were set to 1.0. If these sensors fail to operate, operators in MCR cannot detect the water level of SG. Rector trip cannot be implemented, which results in ATWS initiating event.

EFWCF2CVOD008-ALL (CCF of emergency feedwater pit outlet line check valve to open) – The plant CDF would increase approximately 1.5E+03 times if the probability of this failure were set to 1.0. If these valves fail to open, water in EFW pit cannot be supplied to SGs.

EFWCF4CVOD012-ALL (CCF of emergency feedwater pump discharge line check valve to open) – The plant CDF would increase approximately 1.5E+03 times if the probability of this failure were set to 1.0. If these valves fail to open, water in EFW pit cannot be supplied to SGs.

EFWCF4CVOD018-ALL (CCF of emergency feedwater isolation check valve to open) – The plant CDF would increase approximately 1.5E+03 times if the probability of this failure were set to 1.0. If these valves fail to open, water in EFW pit cannot be supplied to SGs regardless of operation for opening EFW tie-line valves.

EFWCF4MVFC017-ALL (CCF of emergency feedwater control valve to control) – The plant CDF would increase approximately 1.5E+03 times if the probability of this failure were set to 1.0. If these valves fail to control, adequate flow of emergency feedwater cannot be supplied to SGs.

EFWXVEL006A/B (External leak of secondary tank outlet manual valve) – The plant CDF would increase approximately 1.5E+03 times if the probability of this failure were set to 1.0. If this basic event occurs, water in EFW pit cannot be supplied to SGs.

EPSCF4CBSO72DB-124 (CCF of breakers between Class 1E battery and dc switchboard spurious opening) – The plant CDF would increase approximately 1.0E+03 times if the probability of this failure were set to 1.0. If this basic event occurs under the condition where dc switchboard cannot be supplied power, loss of dc power occurs.

EPSCF4BYFF-134 (CCF of Class 1E battery to operate) – The plant CDF would increase approximately 1.0E+03 times if the probability of this failure were set to 1.0. If this basic event occurs under the condition where dc switchboard cannot be supplied power, loss of dc power occurs.

ACCCF4CVOD103-ALL (CCF of accumulator injection line check valve 2 to open) – The plant CDF would increase approximately 4.9E+02 times if the probability of this failure were set to 1.0. If these valves fail to open, all accumulator injection systems are unavailable.

ACCCF4CVOD102-ALL (CCF of accumulator injection line check valve 1 to open) – The plant CDF would increase approximately 4.9E+02 times if the probability of this failure were set to 1.0. If these valves fail to open, all accumulator injection systems are unavailable.

SWSCF4PMBD001-R-ALL (CCF of essential service water pump to re-start) – The plant CDF would increase approximately 3.3E+02 times if the probability of this failure were set to 1.0. If these pumps fail to re-start after LOOP, ESWS will be unavailable, which leads to total loss of CCW system. In addition, if the operator fails to establish alternate CCW for RCP seal cooling, RCP seal LOCA will occur, which leads to the core damage.

CWSCF4PCBD001-R-ALL (CCF of component cooling water pump to re-start) – The plant CDF would increase approximately 3.3E+02 times if the probability of this failure were set to 1.0. If these pumps fail to re-start after LOOP, CCWS will be unavailable,

which leads to total loss of CCW system. In addition, if the operator fails to establish alternate CCW for RCP seal cooling, RCP seal LOCA will occur, which leads to the core damage.

SWSCF4CVOD602-R-ALL (CCF of essential service water pump supply line check valve to re-open) – The plant CDF would increase approximately 3.2E+02 times if the probability of this failure were set to 1.0. If these valves fail to re-open after LOOP, ESWS will be unavailable due to the loss of cooling function for ESW pump, which leads to total loss of CCW system. In addition, if the operator fails to establish alternate CCW for RCP seal cooling, RCP seal LOCA will occur, which leads to the core damage.

SWSCF4CVOD502-R-ALL (CCF of essential service water pump discharge line check valve to re-open) – The plant CDF would increase approximately 3.2E+02 times if the probability of this failure were set to 1.0. If these valves fail to re-open after LOOP, ESWS will be unavailable since ESW cannot be supplied to CCW heat exchangers, which leads to total loss of CCW system. In addition, if the operator fails to establish alternate CCW for RCP seal cooling, RCP seal LOCA will occur, which leads to the core damage.

CWSCF4CVOD016-R-ALL (CCF of component cooling water pump discharge line check valve to re-open) – The plant CDF would increase approximately 3.2E+02 times if the probability of this failure were set to 1.0. If these valves fail to re-open, function of CCW system will be lost, which leads to total loss of CCW system. In addition, if the operator fails to establish alternate CCW for RCP seal cooling, RCP seal LOCA will occur, which leads to the core damage.

EPSCF4DLLRDG-ALL (CCF of Class 1E emergency power generators to run after first hour) – The plant CDF would increase approximately 2.2E+02 times if the probability of this failure were set to 1.0. If all Class 1E GTGs fail to run after LOOP, operators will attempt to connect alternate ac power source to Class 1E buses for the power recovery. The failure of operator action will cause the total loss of ac power.

EPSCF4DLADDG-ALL (CCF of Class 1E emergency power generators to start) – The plant CDF would increase approximately 2.2E+02 times if the probability of this failure were set to 1.0. If all Class 1E GTGs fail to start after LOOP, operators will attempt to connect alternate ac power source to Class 1E buses for the power recovery. The failure of operator action will cause the total loss of ac power.

EPSCF4DLSRDG-ALL (CCF of Class 1E emergency power generators to run during first hour) – The plant CDF would increase approximately 2.2E+02 times if the probability of this failure were set to 1.0. If all Class 1E GTGs fail to run after LOOP, operators will attempt to connect alternate ac power source to Class 1E buses for the power recovery. The failure of operator action will cause the total loss of ac power.

EPSCF4SEFFDG-ALL (CCF of Class 1E emergency power generators sequencer to operate) – The plant CDF would increase approximately 2.2E+02 times if the probability of this failure were set to 1.0. If all Class 1E GTGs fail to operate after LOOP, operators will attempt to connect alternate ac power source to Class 1E buses for the power recovery. The failure of operator action will cause the total loss of ac power.

EPSCF4CBFC52EPS-ALL (CCF of breakers between Class 1E 6.9kV bus and Class 1E emergency generator to close) – The plant CDF would increase approximately 2.2E+02 times if the probability of this failure were set to 1.0. If these breakers fail to close, operators will attempt to connect alternate ac power source to Class 1E buses for the power recovery. The failure of operator action will cause the total loss of ac power.

EPSCF4CBSO52EPS-ALL (CCF of breakers between class 1E 6.9kV bus and gas turbine generator spurious opening) – The plant CDF would increase approximately 2.2E+02 times if the probability of this failure were set to 1.0. If these breakers spuriously open during GTG operation, operators will attempt to connect alternate ac power source to Class 1E buses for the power recovery. The failure of operator action will cause the total loss of ac power.

EPSCF4IVFF001-ALL (CCF of UPS units to operate) – The plant CDF would increase approximately 2.2E+02 times if the probability of this failure were set to 1.0. If UPS units fail to operate while power is not supplied to I&C panelboard through I&C transformer, I&C panelboard will be not available, which results in the unavailability of I&C system such as ECCS actuation signal or containment spray actuation signal.

EPSCF4CBSO52UA-ALL (CCF of breakers between UPS unit and I&C panelboard spurious opening) – The plant CDF would increase approximately 2.1E+02 times if the probability of this failure were set to 1.0. If these breakers spuriously open while power is not supplied to I&C panelboard through I&C transformer, I&C panelboard will be not available, which results in the unavailability of I&C system such as ECCS actuation signal or containment spray actuation signal.

EPSCF4CBSO72AU-ALL (CCF of breakers between dc switchboard and UPS unit spurious opening) – The plant CDF would increase approximately 2.1E+02 times if the probability of this failure were set to 1.0. If these breakers spuriously open while UPS unit is not supplied power from Class 1E 480V motor control center, UPS unit will not be operable.

HPIPMEL001A/B/C/D (External leak of safety injection pump) – The plant CDF would increase approximately 1.6E+02 times if the probability of this failure were set to 1.0. If this basic event occurs, SI pump is not operable, which results in the unavailability of HHIS.

RSSPMEL001A/B/C/D (External leak of containment spray/heat residual removal pump) – The plant CDF would increase approximately 1.6E+02 times if the probability of this failure were set to 1.0. If this basic event occurs, CS/RHR pump is unavailable, which results in the unavailability of CSS/RHRS.

RSSRIEL001A/B/C/D (External leak of containment spray/heat residual removal heat exchanger) – The plant CDF would increase approximately 1.6E+02 times if the probability of this failure were set to 1.0. If this basic event occurs, CS/RHR heat exchanger is unavailable, which results in the unavailability of CSS/RHRS for heat removal function.

RSSXVEL013A/B/C/D (External leak of containment spray/heat residual removal pump mini-flow line manual valve) – The plant CDF would increase approximately

1.6E+02 times if the probability of this failure were set to 1.0. If this basic event occurs, CSS/RHRS is unavailable, which results in the unavailability of CSS/RHRS.

RSSCVEL004A/B/C/D (External leak of containment spray/heat residual removal pump suction line check valve) – The plant CDF would increase approximately 1.6E+02 times if the probability of this failure were set to 1.0. If this basic event occurs, CS/RHR pump cannot be supplied water from RWSP, which results in the unavailability of CSS/RHRS.

CFACVEL012 (External leak of fire suppression water line check valve) – The plant CDF would increase approximately 1.6E+02 times if the probability of this failure were set to 1.0. This valve connects fire suppression system to CSS/RHRS in B train. If this basic event occurs, CSS/RHRS in B-train is unavailable, which leads to loss of CSS/RHRS.

RSSXVEL034A/D (External leak of spent fuel pit inlet line manual valve) – The plant CDF would increase approximately 1.6E+02 times if the probability of this failure were set to 1.0. If this basic event occurs, CSS/RHRS in A and D trains are unavailable, which leads to loss of CSS/RHRS.

RSSXVEL031A/D (External leak of spent fuel pit return line manual valve) – The plant CDF would increase approximately 1.6E+02 times if the probability of this failure were set to 1.0. If this basic event occurs, CSS/RHRS in A and D trains are unavailable, which leads to loss of CSS/RHRS.

RSSXVEL002A/B/C/D (External leak of containment spray injection line manual valve) – The plant CDF would increase approximately 1.6E+02 times if the probability of this failure were set to 1.0. If this basic event occurs, CV spray is inoperable, which leads to loss of CSS/RHRS.

RSSMVEL004A/B/C/D (External leak of containment spray injection line motor-operated valve) – The plant CDF would increase approximately 1.6E+02 times if the probability of this failure were set to 1.0. If this basic event occurs, CV spray is unavailable, which leads to loss of CSS/RHRS.

HPICVEL004A/B/C/D (External leak of safety injection pump discharge line check valve) – The plant CDF would increase approximately 1.6E+02 times if the probability of this failure were set to 1.0. If this basic event occurs, HHIS is unavailable.

RWSMVEL004 (External leak of refueling water storage pit outlet line motor-operated valve [outside CV]) – The plant CDF would increase approximately 1.6E+02 times if the probability of this failure were set to 1.0. If this basic event occurs, water in RWSP will drain out. Then, the mitigation systems that shares with RWSP (i.e., HHIS and CSS/RHRS) are not available.

HPIMVEL009A/B/C/D (External leak of safety injection pump discharge line motor-operated valve) – The plant CDF would increase approximately 1.6E+02 times if the probability of this failure were set to 1.0. If this basic event occurs, SI pump is inoperable, which leads to loss of HHIS.

RSSMVEL021A/B/C/D (External leak of containment spray/residual heat removal pump discharge line isolation valve) – The plant CDF would increase approximately 1.6E+02 times if the probability of this failure were set to 1.0. If this basic event occurs, the function of CSS/RHRS will be lost.

RSSAVEL611/613/621/623 (External leak of containment spray/residual heat removal heat exchanger bypass line air-operated valve) – The plant CDF would increase approximately 1.6E+02 times if the probability of this failure were set to 1.0. Since these valves are in B or C train, If this basic event occurs, the function of CSS/RHRS in B or C train will be lost.

RWSPMEL001A/B (External leak refueling water recirculation pump) – The plant CDF would increase approximately 1.6E+02 times if the probability of this failure were set to 1.0. If this basic event occurs, water in RWSP drains out and RWSP is unavailable. Then, the mitigation systems that share with RWSP (i.e., HHIS and CSS/RHRS) are not available.

RWSXVEL103A/B (External leak of spent fuel pit demineralizer return line manual valve) – The plant CDF would increase approximately 1.6E+02 times if the probability of this failure were set to 1.0. If this basic event occurs, water in RWSP drains out and RWSP is unavailable. Then, the mitigation systems that share with RWSP (i.e., HHIS and CSS/RHRS) are not available.

RWSXVEL066A/B (External leak of component cooling water surge tank return line manual valve) – The plant CDF would increase approximately 1.6E+02 times if the probability of this failure were set to 1.0. If this basic event occurs, water in RWSP drains out and RWSP is unavailable. Then, the mitigation systems that share with RWSP (i.e., HHIS and CSS/RHRS) are not available.

RWSXVEL006A/B (External leak of refueling water recirculation pump suction line manual valve) – The plant CDF would increase approximately 1.6E+02 times if the probability of this failure were set to 1.0. If this basic event occurs, water in RWSP drains out and RWSP is unavailable. Then, the mitigation systems that share with RWSP (i.e., HHIS and CSS/RHRS) are not available.

RWSXVEL013A/B (External leak of refueling water recirculation pump discharge line manual valve) – The plant CDF would increase approximately 1.6E+02 times if the probability of this failure were set to 1.0. If this basic event occurs, water in RWSP drains out and RWSP is unavailable. Then, the mitigation systems that share with RWSP (i.e., HHIS and CSS/RHRS) are not available.

RWSXVEL021 (External leak of refueling water storage pit return line manual valve) – The plant CDF would increase approximately 1.6E+02 times if the probability of this failure were set to 1.0. If this basic event occurs, water in RWSP drains out and RWSP is unavailable. Then, the mitigation systems that share with RWSP (i.e., HHIS and CSS/RHRS) are not available.

RWSXVEL028 (External leak of spent fuel pit return line manual valve) – The plant CDF would increase approximately 1.6E+02 times if the probability of this failure were set to 1.0. If this basic event occurs, water in RWSP drains out and RWSP is unavailable.

Then, the mitigation systems that share with RWSP (i.e., HHIS and CSS/RHRS) are not available.

RWSXVEL005 (External leak of refueling water recirculation pump suction line tie-line manual valve) – The plant CDF would increase approximately 1.6E+02 times if the probability of this failure were set to 1.0. If this basic event occurs, water in RWSP drains out and RWSP is unavailable. Then, the mitigation systems that share with RWSP (i.e., HHIS and CSS/RHRS) are not available.

RWSXVEL014 (External leak of refueling water recirculation pump discharge line tie-line manual valve) – The plant CDF would increase approximately 1.6E+02 times if the probability of this failure were set to 1.0. If this basic event occurs, water in RWSP drains out and RWSP is unavailable. Then, the mitigation systems that share with RWSP (i.e., HHIS and CSS/RHRS) are not available.

RWSXVEL101 (External leak of refueling water storage auxiliary tank discharge line manual valve) – The plant CDF would increase approximately 1.6E+02 times if the probability of this failure were set to 1.0. If this basic event occurs, water in RWSP drains out and RWSP is unavailable. Then, the mitigation systems that share with RWSP (i.e., HHIS and CSS/RHRS) are not available.

RWSCVEL037 (External leak of CVDP inlet line check valve) – The plant CDF would increase approximately 1.6E+02 times if the probability of this failure were set to 1.0. If this basic event occurs, water in RWSP drains out and RWSP is unavailable. Then, the mitigation systems that share with RWSP (i.e., HHIS and CSS/RHRS) are not available.

RWSCVEL012A/B (External leak of refueling water recirculation pump discharge line check valve) – The plant CDF would increase approximately 1.6E+02 times if the probability of this failure were set to 1.0. If this basic event occurs, water in RWSP drains out and RWSP is unavailable. Then, the mitigation systems that share with RWSP (i.e., HHIS and CSS/RHRS) are not available.

RWSCVEL027 (External leak of spent fuel pit return line check valve) – The plant CDF would increase approximately 1.6E+02 times if the probability of this failure were set to 1.0. If this basic event occurs, water in RWSP drains out and RWSP is unavailable. Then, the mitigation systems that share with RWSP (i.e., HHIS and CSS/RHRS) are not available.

RWSCVEL065A/B (External leak of component cooling water surge tank return line manual valve) – The plant CDF would increase approximately 1.6E+02 times if the probability of this failure were set to 1.0. If this CCF occurs, water in RWSP drains out and RWSP is unavailable. Then, the mitigation systems that share with RWSP (i.e., HHIS and CSS/RHRS) are not available.

RSSCF4PMAD001-ALL (CCF of containment spray/residual heat removal pump to start) – The plant CDF would increase approximately 1.4E+02 times if the probability of this failure were set to 1.0. If the CS/RHR pumps fail to start after detection of containment spray actuation signal, neither CV spray nor alternate core cooling function are available.

RSSCF4PMSR001-ALL (CCF of containment spray/residual heat removal pump to run during first hour) – The plant CDF would increase approximately 1.4E+02 times if the probability of this failure were set to 1.0. If the CS/RHR pumps fail to run, neither CV spray nor alternate core cooling function are available.

RSSCF4CVOD004-ALL (CCF of containment spray/residual heat removal pump suction line valves to open) – The plant CDF would increase approximately 1.4E+02 times if the probability of this failure were set to 1.0. If these valves fail to open, water in RWSP cannot be supplied to all four CS/RHR pumps. Then, the CV spray and alternate core cooling are unavailable.

RSSCF4PMLR001-ALL (CCF of containment spray/residual heat removal pump to run after first hour) – The plant CDF would increase approximately 1.4E+02 times if the probability of this failure were set to 1.0. If the CS/RHR pumps fail to run, neither CV spray nor alternate core cooling function are available.

RSSCF4MVOD145-ALL (CCF of containment spray/residual heat removal heat exchanger cooling line motor-operated valve to open) – The plant CDF would increase approximately 1.4E+02 times if the probability of this failure were set to 1.0. If these valves fail to open after detection of both ECCS actuation signal and CCW pump start signal, function of heat removal through CS/RHR heat exchanger will be lost, which will results in loss of CSS/RHRS.

Common-cause importance

The ten most risk-important common cause basic events are given in Table 19.1-32 for FV importance and in Table 19.1-33 for a RAW.

The most significant CCF basic event based on FV importance is CCF of all emergency power generators to run. The second most significant CCF basic event is CCF of all emergency power generators to start.

The top eight most significant CCF basic events based on the RAW are the same as the basic events ranked in top ten most significant basic events based on the RAW.

Human error importance

The ten most risk-important human error basic events are given in Table 19.1-34 for FV importance and in Table 19.1-35 for RAW.

The most significant human error basic event based on FV importance is **EPSOO02RDG (Fail to connect alternate ac power source)**, with a FV importance of 2.9E-01..

Nine human error basic events have a RAW larger than 2.0E+00. The most significant human error basic event based on RAW is **ACWOO02FS (Fail to supply alternate component cooling water from FSS)**, with a RAW of 1.7E+01. The plant CDF would increase approximately 17 times, if the probability of this failure were set to 1.0.

Table 19.1-119 Key Insights and Assumptions (Sheet ~~16~~ 18 of ~~23~~26)

Key Insights and Assumptions	Dispositions
LPSD assumptions	
1. Freeze plug may not be used for US-APWR because the isolation valves are installed considering maintenance and CCWS has been separated individual trains. Therefore, the freeze plug failure is excluded from the potential initiator.	COL 13.5(7)
2. Hydrogen peroxide addition is adopted instead of aeration because it decreases the duration of the mid-loop operation. As a result, the mid-loop operation is needed only to drain the SG primary side water while being able to maintain a high RCS water level for most of the oxidation operation.	5.4.7.2.3.6
3. Installation of a redundant water narrow level instrument enhances reliability of the mid-loop operation.	5.4.7.2.3.6
4. For manual operation, one hour is conservatively assumed to be the allowable time until the exposure of reactor core. This allowable time is determined from previous PRA studies and experience which mid-loop operation.	19.2.5 COL 19.3(6) COL 13.5(6)
5. When the RCS is mid-loop operation, it is assumed that the reflux cooling with the SGs is effective.	19.2.5 COL 19.3(6) COL 13.5(6)
6. Various equipments will be possible temporary in the containment during LPSD operation for maintenance. However, there are few possibilities that these materials fall into the sump because the debris interceptor is installed on the sump of US-APWR. Therefore, potential plugging of the suction strainers due to debris is excluded from the PRA modeling.	6.2.2
7. For the US-APWR, low-pressure letdown line isolation valves are installed. One normally closed air-operated valve is installed in each of two low-pressure letdown lines that are connected to two of four RHR trains. During normal plant cooldown operation, these valves are opened to divert part of the normal RCS flow to the CVCS for purification and the RCS inventory control. These valves are automatically closed and the CVCS is isolated from the RHRS by the RCS loop low-level signal to prevent loss of RCS inventory at mid-loop operation during plant shutdown. There are no features that automate the response to loss of RHR.	19.2.5 COL 19.3(6) 5.4.7.2.3.6 7.6.1.7

Table 19.1-131 LOCCW with Reactor Trip Resulting Sequence Dominant Cutsets (Sheet 1 of 4)

Rank	Cutsets Freq. (/RY)	Percent	Cutsets	Basic Event Name
1	1.1E-08	28.0%	!15LOCCW EFWCF2PTAD001AD-ALL RCP----SEAL	LOSS OF COMPONENT COOLING WATER EFS-RPP-001A,D (EFW PUMP) FAIL TO START (CCF) RCP SEAL LOCA
2	2.7E-09	6.9%	!15LOCCW EFWCF2PTSR001AD-ALL RCP----SEAL	LOSS OF COMPONENT COOLING WATER EFS-RPP-001A,D (EFW PUMP) FAIL TO RUN DURING FIRST HOUR OF OPERATION (CCF) RCP SEAL LOCA
3	2.7E-09	6.8%	!15LOCCW EFWOO01006AB EFWPTAD001D RCP----SEAL	LOSS OF COMPONENT COOLING WATER (HE) FAIL TO CHANGEOVER EFW PIT EFS-RPP-001D (D-EFW PUMP) FAIL TO START RCP SEAL LOCA
4	2.7E-09	6.8%	!15LOCCW EFWOO01006AB EFWPTAD001A RCP----SEAL	LOSS OF COMPONENT COOLING WATER (HE) FAIL TO CHANGEOVER EFW PIT EFS-RPP-001A (A-EFW PUMP) FAIL TO START RCP SEAL LOCA
5	2.1E-09	5.2%	!15LOCCW EFWOO01006AB EFWTMTA001D RCP----SEAL	LOSS OF COMPONENT COOLING WATER (HE) FAIL TO CHANGEOVER EFW PIT EFS-RPP-001D (D-EFW PUMP) TEST & MAINTENANCE RCP SEAL LOCA
6	2.1E-09	5.2%	!15LOCCW EFWOO01006AB EFWTMTA001A RCP----SEAL	LOSS OF COMPONENT COOLING WATER (HE) FAIL TO CHANGEOVER EFW PIT EFS-RPP-001A (A-EFW PUMP) TEST & MAINTENANCE RCP SEAL LOCA
7	1.8E-09	4.5%	!15LOCCW EFWCF2PTLR001AD-ALL RCP----SEAL	LOSS OF COMPONENT COOLING WATER EFS-RPP-001A,D (EFW PUMP) FAIL TO RUN AFTER FIRST HOUR OF OPERATION (CCF) RCP SEAL LOCA

Table 19.1-131 LOCCW with Reactor Trip Resulting LOCCW Sequence Dominant Cutsets (Sheet 2 of 4)

Rank	Cutsets Freq. (/RY)	Percent	Cutsets	Basic Event Name
8	1.0E-09	2.6%	!15LOCCW EFWPTAD001A EFWPTAD001D RCP----SEAL	LOSS OF COMPONENT COOLING WATER EFS-RPP-001A (A-EFW PUMP) FAIL TO START EFS-RPP-001D (D-EFW PUMP) FAIL TO START RCP SEAL LOCA
9	1.0E-09	2.6%	!15LOCCW EFWCF2MVOD103-ALL RCP----SEAL	LOSS OF COMPONENT COOLING WATER EFS-MOV-103A,D FAIL TO OPEN (CCF) RCP SEAL LOCA
10	9.8E-10	2.5%	!15LOCCW EFWOO01006AB EFWPTSR001A RCP----SEAL	LOSS OF COMPONENT COOLING WATER (HE) FAIL TO CHANGEOVER EFW PIT EFS-RPP-001A (A-EFW PUMP) FAIL TO RUN DURING FIRST HOUR OF OPERATION RCP SEAL LOCA
11	9.8E-10	2.5%	!15LOCCW EFWOO01006AB EFWPTSR001D RCP----SEAL	LOSS OF COMPONENT COOLING WATER (HE) FAIL TO CHANGEOVER EFW PIT EFS-RPP-001D (D-EFW PUMP) FAIL TO RUN DURING FIRST HOUR OF OPERATION RCP SEAL LOCA
12	8.0E-10	2.0%	!15LOCCW EFWPTAD001A EFWTMTA001D RCP----SEAL	LOSS OF COMPONENT COOLING WATER EFS-RPP-001A (A-EFW PUMP) FAIL TO START EFS-RPP-001D (D-EFW PUMP) TEST & MAINTENANCE RCP SEAL LOCA
13	8.0E-10	2.0%	!15LOCCW EFWPTAD001D EFWTMTA001A RCP----SEAL	LOSS OF COMPONENT COOLING WATER EFS-RPP-001D (D-EFW PUMP) FAIL TO START EFS-RPP-001A (A-EFW PUMP) TEST & MAINTENANCE RCP SEAL LOCA

Table 19.1-131 LOCCW with Reactor Trip Resulting LOCCW Sequence Dominant Cutsets (Sheet 3 of 4)

Rank	Cutsets Freq. (/RY)	Percent	Cutsets	Basic Event Name
14	6.3E-10	1.6%	!15LOCCW EFWOO01006AB EFWPTLR001D RCP----SEAL	LOSS OF COMPONENT COOLING WATER (HE) FAIL TO CHANGEOVER EFW PIT EFS-RPP-001D (D-EFW PUMP) FAIL TO RUN AFTER FIRST HOUR OF OPERATION RCP SEAL LOCA
15	6.3E-10	1.6%	!15LOCCW EFWOO01006AB EFWPTLR001A RCP----SEAL	LOSS OF COMPONENT COOLING WATER (HE) FAIL TO CHANGEOVER EFW PIT EFS-RPP-001A (A-EFW PUMP) FAIL TO RUN AFTER FIRST HOUR OF OPERATION RCP SEAL LOCA
16	4.1E-10	1.0%	!15LOCCW EFWOO01014 EFWPTAD001A RCP----SEAL	LOSS OF COMPONENT COOLING WATER (HE) FAIL TO OPEN EFW TIE-LINE VALVE BETWEEN TRAINS EFS-RPP-001A (A-EFW PUMP) FAIL TO START RCP SEAL LOCA
17	4.1E-10	1.0%	!15LOCCW EFWOO01014 EFWPTAD001D RCP----SEAL	LOSS OF COMPONENT COOLING WATER (HE) FAIL TO OPEN EFW TIE-LINE VALVE BETWEEN TRAINS EFS-RPP-001D (D-EFW PUMP) FAIL TO START RCP SEAL LOCA
18	3.9E-10	1.0%	!15LOCCW EFWMVOD103D EFWOO01006AB RCP----SEAL	LOSS OF COMPONENT COOLING WATER EFS-MOV-103D FAIL TO OPEN (HE) FAIL TO CHANGEOVER EFW PIT RCP SEAL LOCA
19	3.9E-10	1.0%	!15LOCCW EFWMVOD103A EFWOO01006AB RCP----SEAL	LOSS OF COMPONENT COOLING WATER EFS-MOV-103A FAIL TO OPEN (HE) FAIL TO CHANGEOVER EFW PIT RCP SEAL LOCA

Table 19.1-131 LOCCW with Reactor Trip Resulting LOCCW Sequence Dominant Cutsets (Sheet 4 of 4)

Rank	Cutsets Freq. (/RY)	Percent	Cutsets	Basic Event Name
20	3.8E-10	1.0%	!15LOCCW	LOSS OF COMPONENT COOLING WATER
			EFWPTAD001D	EFS-RPP-001D (D-EFW PUMP) FAIL TO START
			EFWPTSR001A	EFS-RPP-001A (A-EFW PUMP) FAIL TO RUN DURING FIRST HOUR OF OPERATION
			RCP----SEAL	RCP SEAL LOCA

Table 19.1-132 SLOCA with Reactor Trip Resulting Sequence Dominant Cutsets (Sheet 1 of 3)

Rank	Cutsets Freq. (/RY)	Percent	Cutsets	Basic Event Name
1	3.5E-08	89.7%	!03SLOCA RWSCF4SUPR001-ALL	SMALL PIPE BREAK LOCA SIS-CSR-001A,B,C,D (ESS/CS STRAINER) PLUG DURING OPERATION (CCF)
2	2.6E-10	0.7%	!03SLOCA RWSXVEL001	SMALL PIPE BREAK LOCA RWS-VLV-001 EXTERNAL LEAK LARGE
3	2.6E-10	0.7%	!03SLOCA RWSXVEL024	SMALL PIPE BREAK LOCA RWS-VLV-024 EXTERNAL LEAK LARGE
4	1.7E-10	0.4%	!03SLOCA RWSTNEL001	SMALL PIPE BREAK LOCA RWS-CPT-001 (RWSP) EXTERNAL LEAK LARGE
5	1.7E-10	0.4%	!03SLOCA RWSCVEL023	SMALL PIPE BREAK LOCA RWS-VLV-023 EXTERNAL LEAK LARGE
6	1.6E-10	0.4%	!03SLOCA RWSCF4SUPR001-234 SWSTMPE001B	SMALL PIPE BREAK LOCA SIS-CSR-001A,B,C,D (ESS/CS STRAINER) PLUG DURING OPERATION (CCF) EWS-OPP-001B (B-ESW PUMP) TEST & MAINTENANCE
7	1.6E-10	0.4%	!03SLOCA RWSCF4SUPR001-124 SWSTMPE001D	SMALL PIPE BREAK LOCA SIS-CSR-001A,B,C,D (ESS/CS STRAINER) PLUG DURING OPERATION (CCF) EWS-OPP-001D (D-ESW PUMP) TEST & MAINTENANCE
8	1.0E-10	0.3%	!03SLOCA RSSOO01CSS001B RSSRIEL001B	SMALL PIPE BREAK LOCA (HE) FAIL TO ISOLATE CS/RHR TRAIN B WHEN IT IS LEAKING RHS-RHX-001B (B-CS/RHR HX) TUBE EXTERNAL LEAK LARGE
9	1.0E-10	0.3%	!03SLOCA RSSOO01CSS001A RSSRIEL001A	SMALL PIPE BREAK LOCA (HE) FAIL TO ISOLATE CS/RHR TRAIN A WHEN IT IS LEAKING RHS-RHX-001A (A-CS/RHR HX) TUBE EXTERNAL LEAK LARGE

Table 19.1-132 SLOCA with Reactor Trip Resulting Sequence Dominant Cutsets (Sheet 2 of 3)

Rank	Cutsets Freq. (/RY)	Percent	Cutsets	Basic Event Name
10	1.0E-10	0.3%	!03SLOCA RSSOO01CSS001D RSSRIEL001D	SMALL PIPE BREAK LOCA (HE) FAIL TO ISOLATE CS/RHR TRAIN D WHEN IT IS LEAKING RHS-RHX-001D (D-CS/RHR HX) TUBE EXTERNAL LEAK LARGE
11	1.0E-10	0.3%	!03SLOCA RSSOO01CSS001C RSSRIEL001C	SMALL PIPE BREAK LOCA (HE) FAIL TO ISOLATE CS/RHR TRAIN C WHEN IT IS LEAKING RHS-RHX-001C (C-CS/RHR HX) TUBE EXTERNAL LEAK LARGE
12	9.3E-11	0.2%	!03SLOCA CWSTMRC001D RWSCF4SUPR001-124	SMALL PIPE BREAK LOCA NCS-RHX-001D (D-CCW HX) TEST & MAINTENANCE SIS-CSR-001A,B,C,D (ESS/CS STRAINER) PLUG DURING OPERATION (CCF)
13	9.3E-11	0.2%	!03SLOCA CWSTMRC001B RWSCF4SUPR001-234	SMALL PIPE BREAK LOCA NCS-RHX-001B (B-CCW HX) TEST & MAINTENANCE SIS-CSR-001A,B,C,D (ESS/CS STRAINER) PLUG DURING OPERATION (CCF)
14	8.6E-11	0.2%	!03SLOCA RSSMVELCSS001D	SMALL PIPE BREAK LOCA CSS-MOV-001D EXTERNAL LEAK LARGE
15	8.6E-11	0.2%	!03SLOCA HPIMVEL001D	SMALL PIPE BREAK LOCA SIS-MOV-001D EXTERNAL LEAK LARGE
16	8.6E-11	0.2%	!03SLOCA RSSMVELCSS001A	SMALL PIPE BREAK LOCA CSS-MOV-001A EXTERNAL LEAK LARGE
17	8.6E-11	0.2%	!03SLOCA RSSMVELCSS001C	SMALL PIPE BREAK LOCA CSS-MOV-001C EXTERNAL LEAK LARGE
18	8.6E-11	0.2%	!03SLOCA RSSMVELCSS001B	SMALL PIPE BREAK LOCA CSS-MOV-001B EXTERNAL LEAK LARGE

Table 19.1-132 SLOCA with Reactor Trip Resulting Sequence Dominant Cutsets (Sheet 3 of 3)

Rank	Cutsets Freq. (/RY)	Percent	Cutsets	Basic Event Name
19	8.6E-11	0.2%	!03SLOCA RWSMVEL002	SMALL PIPE BREAK LOCA RWS-MOV-002 EXTERNAL LEAK LARGE
20	8.6E-11	0.2%	!03SLOCA HPIMVEL001B	SMALL PIPE BREAK LOCA SIS-MOV-001B EXTERNAL LEAK LARGE

Table 19.1-133 LOFF with Reactor Trip Resulting Sequence Dominant Cutsets (Sheet 1 of 5)

Rank	Cutsets Freq. (/RY)	Percent	Cutsets	Basic Event Name
1	1.7E-09	6.8%	!14LOFF EFWCF2CVOD008-ALL HPIOO02FWBD	LOSS OF FEED WATER FLOW EFS-VLV-008A,B FAIL TO OPEN (CCF) (HE) FAIL TO OPEN SAFETY DEPRESSURIZATION VALVE AND START SAFETY INJECTION PUMP
2	1.2E-09	4.8%	!14LOFF EFWCF4CVOD012-ALL HPIOO02FWBD	LOSS OF FEED WATER FLOW EFS-VLV-012A,B,C,D FAIL TO OPEN (CCF) (HE) FAIL TO OPEN SAFETY DEPRESSURIZATION VALVE AND START SAFETY INJECTION PUMP
3	1.2E-09	4.8%	!14LOFF EFWCF4CVOD018-ALL HPIOO02FWBD	LOSS OF FEED WATER FLOW EFS-VLV-018A,B,C,D FAIL TO OPEN (CCF) (HE) FAIL TO OPEN SAFETY DEPRESSURIZATION VALVE AND START SAFETY INJECTION PUMP
4	9.8E-10	3.9%	!14LOFF HPIOO02FWBD RTPCF4ICYRRT7001-ALL	LOSS OF FEED WATER FLOW (HE) FAIL TO OPEN SAFETY DEPRESSURIZATION VALVE AND START SAFETY INJECTION PUMP SG WATER LEVEL SENSOR (NARROW RANGE) CCF
5	9.6E-10	3.8%	!14LOFF EFWOO01006AB EFWPTAD001A HPIOO02FWBD SWSTMPE001B	LOSS OF FEED WATER FLOW (HE) FAIL TO CHANGEOVER EFW PIT EFS-RPP-001A (A-EFW PUMP) FAIL TO START (HE) FAIL TO OPEN SAFETY DEPRESSURIZATION VALVE AND START SAFETY INJECTION PUMP EWS-OPP-001B (B-ESW PUMP) TEST & MAINTENANCE
6	8.0E-10	3.2%	!14LOFF EFWOO01006AB EFWPTAD001A HPIOO02FWBD VCWCHBD001B	LOSS OF FEED WATER FLOW (HE) FAIL TO CHANGEOVER EFW PIT EFS-RPP-001A (A-EFW PUMP) FAIL TO START (HE) FAIL TO OPEN SAFETY DEPRESSURIZATION VALVE AND START SAFETY INJECTION PUMP VWS-PEQ-001B (B-ESSENTIAL CHILLER UNIT) FAIL TO START

Table 19.1-133 LOFF with Reactor Trip Resulting Sequence Dominant Cutsets (Sheet 2 of 5)

Rank	Cutsets Freq. (/RY)	Percent	Cutsets	Basic Event Name
7	7.3E-10	2.9%	!14LOFF EFWOO01006AB EFWTMTA001A HPIOO02FWBD SWSTMPE001B	LOSS OF FEED WATER FLOW (HE) FAIL TO CHANGEOVER EFW PIT EFS-RPP-001A (A-EFW PUMP) TEST & MAINTENANCE (HE) FAIL TO OPEN SAFETY DEPRESSURIZATION VALVE AND START SAFETY INJECTION PUMP EWS-OPP-001B (B-ESW PUMP) TEST & MAINTENANCE
8	6.4E-10	2.6%	!14LOFF EFWOO01006AB EFWPTAD001A HPIOO02FWBD VCWTMPZ001B	LOSS OF FEED WATER FLOW (HE) FAIL TO CHANGEOVER EFW PIT EFS-RPP-001A (A-EFW PUMP) FAIL TO START (HE) FAIL TO OPEN SAFETY DEPRESSURIZATION VALVE AND START SAFETY INJECTION PUMP VWS-PPP-001B (B-ESSENTIAL CHILLED WATER PUMP) TEST & MAINTENANCE
9	6.1E-10	2.4%	!14LOFF EFWCF4MVFC017-ALL HPIOO02FWBD	LOSS OF FEED WATER FLOW EFS-MOV-017A,B,C,D FAIL TO CONTROL (CCF) (HE) FAIL TO OPEN SAFETY DEPRESSURIZATION VALVE AND START SAFETY INJECTION PUMP
10	6.1E-10	2.4%	!14LOFF EFWOO01006AB EFWTMTA001A HPIOO02FWBD VCWCHBD001B	LOSS OF FEED WATER FLOW (HE) FAIL TO CHANGEOVER EFW PIT EFS-RPP-001A (A-EFW PUMP) TEST & MAINTENANCE (HE) FAIL TO OPEN SAFETY DEPRESSURIZATION VALVE AND START SAFETY INJECTION PUMP VWS-PEQ-001B (B-ESSENTIAL CHILLER UNIT) FAIL TO START

Table 19.1-133 LOFF with Reactor Trip Resulting Sequence Dominant Cutsets (Sheet 3 of 5)

Rank	Cutsets Freq. (/RY)	Percent	Cutsets	Basic Event Name
11	4.9E-10	2.0%	!14LOFF	LOSS OF FEED WATER FLOW
			EFWOO01006AB	(HE) FAIL TO CHANGEOVER EFW PIT
			EFWTMTA001A	EFS-RPP-001A (A-EFW PUMP) TEST & MAINTENANCE
			HPIOO02FWBD	(HE) FAIL TO OPEN SAFETY DEPRESSURIZATION VALVE AND START SAFETY INJECTION PUMP
			VCWTMPZ001B	VWS-PPP-001B (B-ESSENTIAL CHILLED WATER PUMP) TEST & MAINTENANCE
12	3.5E-10	1.4%	!14LOFF	LOSS OF FEED WATER FLOW
			EFWOO01006AB	(HE) FAIL TO CHANGEOVER EFW PIT
			EFWPTSR001A	EFS-RPP-001A (A-EFW PUMP) FAIL TO RUN DURING FIRST HOUR OF OPERATION
			HPIOO02FWBD	(HE) FAIL TO OPEN SAFETY DEPRESSURIZATION VALVE AND START SAFETY INJECTION PUMP
			SWSTMPE001B	EWS-OPP-001B (B-ESW PUMP) TEST & MAINTENANCE
13	3.2E-10	1.3%	!14LOFF	LOSS OF FEED WATER FLOW
			EFWOO01006AB	(HE) FAIL TO CHANGEOVER EFW PIT
			EFWPTAD001A	EFS-RPP-001A (A-EFW PUMP) FAIL TO START
			EFWTMPA001B	EFS-RPP-001B (B-EFW PUMP) TEST & MAINTENANCE
			HPIOO02FWBD	(HE) FAIL TO OPEN SAFETY DEPRESSURIZATION VALVE AND START SAFETY INJECTION PUMP
14	3.2E-10	1.3%	!14LOFF	LOSS OF FEED WATER FLOW
			EFWOO01006AB	(HE) FAIL TO CHANGEOVER EFW PIT
			EFWPTAD001D	EFS-RPP-001D (D-EFW PUMP) FAIL TO START
			EFWTMPA001C	EFS-RPP-001C (C-EFW PUMP) TEST & MAINTENANCE
			HPIOO02FWBD	(HE) FAIL TO OPEN SAFETY DEPRESSURIZATION VALVE AND START SAFETY INJECTION PUMP

Table 19.1-133 LOFF with Reactor Trip Resulting Sequence Dominant Cutsets (Sheet 4 of 5)

Rank	Cutsets Freq. (/RY)	Percent	Cutsets	Basic Event Name
15	2.9E-10	1.2%	!14LOFF EFWOO01006AB EFWPTSR001A HPIOO02FWBD VCWCHBD001B	LOSS OF FEED WATER FLOW (HE) FAIL TO CHANGEOVER EFW PIT EFS-RPP-001A (A-EFW PUMP) FAIL TO RUN DURING FIRST HOUR OF OPERATION (HE) FAIL TO OPEN SAFETY DEPRESSURIZATION VALVE AND START SAFETY INJECTION PUMP VWS-PEQ-001B (B-ESSENTIAL CHILLER UNIT) FAIL TO START
16	2.3E-10	0.9%	!14LOFF EFWOO01006AB EFWPTSR001A HPIOO02FWBD VCWTMPZ001B	LOSS OF FEED WATER FLOW (HE) FAIL TO CHANGEOVER EFW PIT EFS-RPP-001A (A-EFW PUMP) FAIL TO RUN DURING FIRST HOUR OF OPERATION (HE) FAIL TO OPEN SAFETY DEPRESSURIZATION VALVE AND START SAFETY INJECTION PUMP VWS-PPP-001B (B-ESSENTIAL CHILLED WATER PUMP) TEST & MAINTENANCE
17	2.2E-10	0.9%	!14LOFF EFWOO01006AB EFWPTLR001A HPIOO02FWBD SWSTMPE001B	LOSS OF FEED WATER FLOW (HE) FAIL TO CHANGEOVER EFW PIT EFS-RPP-001A (A-EFW PUMP) FAIL TO RUN AFTER FIRST HOUR OF OPERATION (HE) FAIL TO OPEN SAFETY DEPRESSURIZATION VALVE AND START SAFETY INJECTION PUMP EWS-OPP-001B (B-ESW PUMP) TEST & MAINTENANCE
18	2.0E-10	0.8%	!14LOFF EFWCF4MVFC017-134 HPIOO02FWBD	LOSS OF FEED WATER FLOW EFS-MOV-017A,B,C,D FAIL TO CONTROL (CCF) (HE) FAIL TO OPEN SAFETY DEPRESSURIZATION VALVE AND START SAFETY INJECTION PUMP

Table 19.1-133 LOFF with Reactor Trip Resulting Sequence Dominant Cutsets (Sheet 5 of 5)

Rank	Cutsets Freq. (/RY)	Percent	Cutsets	Basic Event Name
19	2.0E-10	0.8%	!14LOFF EFWCF4MVFC017-234 HPIOO02FWBD	LOSS OF FEED WATER FLOW EFS-MOV-017A,B,C,D FAIL TO CONTROL (CCF) (HE) FAIL TO OPEN SAFETY DEPRESSURIZATION VALVE AND START SAFETY INJECTION PUMP
20	2.0E-10	0.8%	!14LOFF EFWCF4MVFC017-123 HPIOO02FWBD	LOSS OF FEED WATER FLOW EFS-MOV-017A,B,C,D FAIL TO CONTROL (CCF) (HE) FAIL TO OPEN SAFETY DEPRESSURIZATION VALVE AND START SAFETY INJECTION PUMP

Table 19.1-134 SLBO with Reactor Trip Resulting Sequence Dominant Cutsets (Sheet 1 of 3)

Rank	Cutsets Freq. (/RY)	Percent	Cutsets	Basic Event Name
1	5.7E-09	23.9%	!10SLBO HPIOO01SDVDAS SGNBTSWCCF2	STEAM LINE BREAK DOWNSTREAM MSIV (HE) FAIL TO OPEN SAFETY DEPRESSURIZATION VALVE BY DAS GROUP-2 APPLICATION SOFTWARE CCF
2	4.5E-09	18.9%	!10SLBO HPIOO02FWBD-S MSRCF4AVCD515-ALL	STEAM LINE BREAK DOWNSTREAM MSIV (HE) FAIL TO OPEN SAFETY DEPRESSURIZATION VALVE NMS-SMV-515A,B,C,D FAIL TO CLOSE (CCF)
3	1.3E-09	5.6%	!10SLBO HPIOO02FWBD-S MSRCF4AVCD515-12	STEAM LINE BREAK DOWNSTREAM MSIV (HE) FAIL TO OPEN SAFETY DEPRESSURIZATION VALVE NMS-SMV-515A,B,C,D FAIL TO CLOSE (CCF)
4	1.3E-09	5.6%	!10SLBO HPIOO02FWBD-S MSRCF4AVCD515-13	STEAM LINE BREAK DOWNSTREAM MSIV (HE) FAIL TO OPEN SAFETY DEPRESSURIZATION VALVE NMS-SMV-515A,B,C,D FAIL TO CLOSE (CCF)
5	1.3E-09	5.6%	!10SLBO HPIOO02FWBD-S MSRCF4AVCD515-23	STEAM LINE BREAK DOWNSTREAM MSIV (HE) FAIL TO OPEN SAFETY DEPRESSURIZATION VALVE NMS-SMV-515A,B,C,D FAIL TO CLOSE (CCF)
6	1.3E-09	5.6%	!10SLBO HPIOO02FWBD-S MSRCF4AVCD515-24	STEAM LINE BREAK DOWNSTREAM MSIV (HE) FAIL TO OPEN SAFETY DEPRESSURIZATION VALVE NMS-SMV-515A,B,C,D FAIL TO CLOSE (CCF)
7	1.3E-09	5.6%	!10SLBO HPIOO02FWBD-S MSRCF4AVCD515-34	STEAM LINE BREAK DOWNSTREAM MSIV (HE) FAIL TO OPEN SAFETY DEPRESSURIZATION VALVE NMS-SMV-515A,B,C,D FAIL TO CLOSE (CCF)
8	1.3E-09	5.6%	!10SLBO HPIOO02FWBD-S MSRCF4AVCD515-14	STEAM LINE BREAK DOWNSTREAM MSIV (HE) FAIL TO OPEN SAFETY DEPRESSURIZATION VALVE NMS-SMV-515A,B,C,D FAIL TO CLOSE (CCF)

Table 19.1-134 SLBO with Reactor Trip Resulting Sequence Dominant Cutsets (Sheet 2 of 3)

Rank	Cutsets Freq. (/RY)	Percent	Cutsets	Basic Event Name
9	1.2E-09	5.1%	!10SLBO HPIOO01SDVDAS SGNBTHWCCF	STEAM LINE BREAK DOWNSTREAM MSIV (HE) FAIL TO OPEN SAFETY DEPRESSURIZATION VALVE BY DAS DIGITAL I&C HARDWARE CCF
10	6.7E-10	2.8%	!10SLBO HPIOO02FWBD-S MSRCF4AVCD515-124	STEAM LINE BREAK DOWNSTREAM MSIV (HE) FAIL TO OPEN SAFETY DEPRESSURIZATION VALVE NMS-SMV-515A,B,C,D FAIL TO CLOSE (CCF)
11	6.7E-10	2.8%	!10SLBO HPIOO02FWBD-S MSRCF4AVCD515-234	STEAM LINE BREAK DOWNSTREAM MSIV (HE) FAIL TO OPEN SAFETY DEPRESSURIZATION VALVE NMS-SMV-515A,B,C,D FAIL TO CLOSE (CCF)
12	6.7E-10	2.8%	!10SLBO HPIOO02FWBD-S MSRCF4AVCD515-134	STEAM LINE BREAK DOWNSTREAM MSIV (HE) FAIL TO OPEN SAFETY DEPRESSURIZATION VALVE NMS-SMV-515A,B,C,D FAIL TO CLOSE (CCF)
13	6.7E-10	2.8%	!10SLBO HPIOO02FWBD-S MSRCF4AVCD515-123	STEAM LINE BREAK DOWNSTREAM MSIV (HE) FAIL TO OPEN SAFETY DEPRESSURIZATION VALVE NMS-SMV-515A,B,C,D FAIL TO CLOSE (CCF)
14	2.6E-10	1.1%	!10SLBO HPIOO02FWBD-S SGNBTSWCCF2	STEAM LINE BREAK DOWNSTREAM MSIV (HE) FAIL TO OPEN SAFETY DEPRESSURIZATION VALVE GROUP-2 APPLICATION SOFTWARE CCF
15	2.2E-10	0.9%	!10SLBO MSRCF4AVCD515-ALL PZRCF2MVOD117-ALL	STEAM LINE BREAK DOWNSTREAM MSIV NMS-SMV-515A,B,C,D FAIL TO CLOSE (CCF) RCS-MOV-117A,B FAIL TO OPEN (CCF)
16	6.6E-11	0.3%	!10SLBO MSRCF4AVCD515-13 PZRCF2MVOD117-ALL	STEAM LINE BREAK DOWNSTREAM MSIV NMS-SMV-515A,B,C,D FAIL TO CLOSE (CCF) RCS-MOV-117A,B FAIL TO OPEN (CCF)
17	6.6E-11	0.3%	!10SLBO MSRCF4AVCD515-34 PZRCF2MVOD117-ALL	STEAM LINE BREAK DOWNSTREAM MSIV NMS-SMV-515A,B,C,D FAIL TO CLOSE (CCF) RCS-MOV-117A,B FAIL TO OPEN (CCF)

Table 19.1-134 SLBO with Reactor Trip Resulting Sequence Dominant Cutsets (Sheet 3 of 3)

Rank	Cutsets Freq. (/RY)	Percent	Cutsets	Basic Event Name
18	6.6E-11	0.3%	!10SLBO MSRCF4AVCD515-23 PZRCF2MVOD117-ALL	STEAM LINE BREAK DOWNSTREAM MSIV NMS-SMV-515A,B,C,D FAIL TO CLOSE (CCF) RCS-MOV-117A,B FAIL TO OPEN (CCF)
19	6.6E-11	0.3%	!10SLBO MSRCF4AVCD515-12 PZRCF2MVOD117-ALL	STEAM LINE BREAK DOWNSTREAM MSIV NMS-SMV-515A,B,C,D FAIL TO CLOSE (CCF) RCS-MOV-117A,B FAIL TO OPEN (CCF)
20	6.6E-11	0.3%	!10SLBO MSRCF4AVCD515-14 PZRCF2MVOD117-ALL	STEAM LINE BREAK DOWNSTREAM MSIV NMS-SMV-515A,B,C,D FAIL TO CLOSE (CCF) RCS-MOV-117A,B FAIL TO OPEN (CCF)

Table 19.1-135 ATWS without Reactor Trip Resulting Sequence Dominant Cutsets (Sheet 1 of 4)

Rank	Cutsets Freq. (/RY)	Percent	Cutsets	Basic Event Name
1	2.1E-08	90.3%	!20ATWS RTPDASF SGNBTHWCCF	ANTICIPATED TRANSIENT DAS FAILURE DIGITAL I&C HARDWARE CCF
2	1.0E-09	4.2%	!20ATWS RTPBTSWCCF RTPDASF	ANTICIPATED TRANSIENT BASIC SOFTWARE CCF DAS FAILURE
3	1.0E-09	4.2%	!20ATWS RTPCRDF TTPTSVF	ANTICIPATED TRANSIENT ROD INJECTION FAILURE (4< RODS) TURBINE STOP VALVE FAILURE
4	2.3E-10	1.0%	!20ATWS RTPCF4AXFFRT-ALL RTPDASF TTPTSVF	ANTICIPATED TRANSIENT REACTOR TRIP BREAKER A1,A2,B1,B2,C1,C2,D1,D2 (CCF) DAS FAILURE TURBINE STOP VALVE FAILURE
5	1.5E-12	0.0%	!20ATWS RTPCF4ICVRRT6001-ALL RTPCF4ICYRRT7001-ALL	ANTICIPATED TRANSIENT PRESSURIZER PRESSURE SENSOR CCF SG WATER LEVEL SENSOR (NARROW RANGE) CCF
6	1.0E-12	0.0%	!20ATWS RTPDASF SGNBTSWCCF1 SGNBTSWCCF2	ANTICIPATED TRANSIENT DAS FAILURE GROUP-1 APPLICATION SOFTWARE CCF GROUP-2 APPLICATION SOFTWARE CCF
7	5.0E-13	0.0%	!20ATWS RTPCF4ICVRRT6001-134 RTPCF4ICYRRT7001-ALL	ANTICIPATED TRANSIENT PRESSURIZER PRESSURE SENSOR CCF SG WATER LEVEL SENSOR (NARROW RANGE) CCF
8	5.0E-13	0.0%	!20ATWS RTPCF4ICVRRT6001-123 RTPCF4ICYRRT7001-ALL	ANTICIPATED TRANSIENT PRESSURIZER PRESSURE SENSOR CCF SG WATER LEVEL SENSOR (NARROW RANGE) CCF
9	5.0E-13	0.0%	!20ATWS RTPCF4ICVRRT6001-124 RTPCF4ICYRRT7001-ALL	ANTICIPATED TRANSIENT PRESSURIZER PRESSURE SENSOR CCF SG WATER LEVEL SENSOR (NARROW RANGE) CCF

Table 19.1-135 ATWS without Reactor Trip Resulting Sequence Dominant Cutsets (Sheet 2 of 4)

Rank	Cutsets Freq. (/RY)	Percent	Cutsets	Basic Event Name
10	5.0E-13	0.0%	!20ATWS RTPCF4ICVRRT6001-234 RTPCF4ICYRRT7001-ALL	ANTICIPATED TRANSIENT PRESSURIZER PRESSURE SENSOR CCF SG WATER LEVEL SENSOR (NARROW RANGE) CCF
11	1.4E-13	0.0%	!20ATWS RTPCF4ICYRRT7001-ALL RTPDASF SGNBTSWCCF2	ANTICIPATED TRANSIENT SG WATER LEVEL SENSOR (NARROW RANGE) CCF DAS FAILURE GROUP-2 APPLICATION SOFTWARE CCF
12	1.1E-13	0.0%	!20ATWS RTPCF4ICVRRT6001-ALL RTPDASF SGNBTSWCCF1	ANTICIPATED TRANSIENT PRESSURIZER PRESSURE SENSOR CCF DAS FAILURE GROUP-1 APPLICATION SOFTWARE CCF
13	3.7E-14	0.0%	!20ATWS RTPCF4ICVRRT6001-234 RTPDASF SGNBTSWCCF1	ANTICIPATED TRANSIENT PRESSURIZER PRESSURE SENSOR CCF DAS FAILURE GROUP-1 APPLICATION SOFTWARE CCF
14	3.7E-14	0.0%	!20ATWS RTPCF4ICVRRT6001-123 RTPDASF SGNBTSWCCF1	ANTICIPATED TRANSIENT PRESSURIZER PRESSURE SENSOR CCF DAS FAILURE GROUP-1 APPLICATION SOFTWARE CCF
15	3.7E-14	0.0%	!20ATWS RTPCF4ICVRRT6001-124 RTPDASF SGNBTSWCCF1	ANTICIPATED TRANSIENT PRESSURIZER PRESSURE SENSOR CCF DAS FAILURE GROUP-1 APPLICATION SOFTWARE CCF
16	3.7E-14	0.0%	!20ATWS RTPCF4ICVRRT6001-134 RTPDASF SGNBTSWCCF1	ANTICIPATED TRANSIENT PRESSURIZER PRESSURE SENSOR CCF DAS FAILURE GROUP-1 APPLICATION SOFTWARE CCF

Table 19.1-135 ATWS without Reactor Trip Resulting Sequence Dominant Cutsets (Sheet 3 of 4)

Rank	Cutsets Freq. (/RY)	Percent	Cutsets	Basic Event Name
17	3.3E-14	0.0%	!20ATWS	ANTICIPATED TRANSIENT
			RTPDASF	DAS FAILURE
			RTPNWIFRT5001A1	RPS-A GROUP-1 NETWORK I/F CARD FOR UNIT BUS RT5001A1 FAILURE
			RTPNWIFRT5001D1	RPS-D GROUP-1 NETWORK I/F CARD FOR UNIT BUS RT5001D1 FAILURE
			RTPTMSPRT7001B	A-SG WATER LEVEL SENSOR (NARROW RANGE) RT7001B BYPASS FOR REPAIRS
			SGNBTSWCCF2	GROUP-2 APPLICATION SOFTWARE CCF
18	3.3E-14	0.0%	!20ATWS	ANTICIPATED TRANSIENT
			RTPDASF	DAS FAILURE
			RTPNWIFRT5002A1	RPS-A GROUP-1 NETWORK I/F CARD FOR SAFETY BUS RT5002A1 FAILURE
			RTPNWIFRT5002C1	RPS-C GROUP-1 NETWORK I/F CARD FOR SAFETY BUS RT5002C1 FAILURE
			RTPTMSPRT7001D	A-SG WATER LEVEL SENSOR (NARROW RANGE) RT7001D BYPASS FOR REPAIRS
			SGNBTSWCCF2	GROUP-2 APPLICATION SOFTWARE CCF
19	3.3E-14	0.0%	!20ATWS	ANTICIPATED TRANSIENT
			RTPDASF	DAS FAILURE
			RTPNWIFRT5002A1	RPS-A GROUP-1 NETWORK I/F CARD FOR SAFETY BUS RT5002A1 FAILURE
			RTPNWIFRT5002C1	RPS-C GROUP-1 NETWORK I/F CARD FOR SAFETY BUS RT5002C1 FAILURE
			RTPTMSPRT7001B	A-SG WATER LEVEL SENSOR (NARROW RANGE) RT7001B BYPASS FOR REPAIRS
			SGNBTSWCCF2	GROUP-2 APPLICATION SOFTWARE CCF

Table 19.1-135 ATWS without Reactor Trip Resulting Sequence Dominant Cutsets (Sheet 4 of 4)

Rank	Cutsets Freq. (/RY)	Percent	Cutsets	Basic Event Name
20	3.3E-14	0.0%	!20ATWS	ANTICIPATED TRANSIENT
			RTPDASF	DAS FAILURE
			RTPNWIFRT5001B1	RPS-B GROUP-1 NETWORK I/F CARD FOR UNIT BUS RT5001B1 FAILURE
			RTPNWIFRT5002C1	RPS-C GROUP-1 NETWORK I/F CARD FOR SAFETY BUS RT5002C1 FAILURE
			RTPTMSPRT7001A	A-SG WATER LEVEL SENSOR (NARROW RANGE) RT7001A BYPASS FOR REPAIRS
			SGNBTSWCCF2	GROUP-2 APPLICATION SOFTWARE CCF

Table 19.1-136 TRANS with Reactor Trip Resulting Sequence Dominant Cutsets (Sheet 1 of 5)

Rank	Cutsets Freq. (/RY)	Percent	Cutsets	Basic Event Name
1	7.2E-10	4.1%	!13TRANS	GENERAL TRANSIENT
			EFWCF2CVOD008-ALL	EFS-VLV-008A,B FAIL TO OPEN (CCF)
			HPIOO02FWBD	(HE) FAIL TO OPEN SAFETY DEPRESSURIZATION VALVE AND START SAFETY INJECTION PUMP
			MFWHARD	MFW SYSTEM FAILURE
2	5.0E-10	2.9%	!13TRANS	GENERAL TRANSIENT
			EFWCF4CVOD012-ALL	EFS-VLV-012A,B,C,D FAIL TO OPEN (CCF)
			HPIOO02FWBD	(HE) FAIL TO OPEN SAFETY DEPRESSURIZATION VALVE AND START SAFETY INJECTION PUMP
			MFWHARD	MFW SYSTEM FAILURE
3	5.0E-10	2.9%	!13TRANS	GENERAL TRANSIENT
			EFWCF4CVOD018-ALL	EFS-VLV-018A,B,C,D FAIL TO OPEN (CCF)
			HPIOO02FWBD	(HE) FAIL TO OPEN SAFETY DEPRESSURIZATION VALVE AND START SAFETY INJECTION PUMP
			MFWHARD	MFW SYSTEM FAILURE
4	4.1E-10	2.4%	!13TRANS	GENERAL TRANSIENT
			HPIOO02FWBD	(HE) FAIL TO OPEN SAFETY DEPRESSURIZATION VALVE AND START SAFETY INJECTION PUMP
			MFWHARD	MFW SYSTEM FAILURE
			RTPCF4ICYRRT7001-ALL	SG WATER LEVEL SENSOR (NARROW RANGE) CCF
5	4.0E-10	2.3%	!13TRANS	GENERAL TRANSIENT
			EFWOO01006AB	(HE) FAIL TO CHANGEOVER EFW PIT
			EFWPTAD001A	EFS-RPP-001A (A-EFW PUMP) FAIL TO START
			HPIOO02FWBD	(HE) FAIL TO OPEN SAFETY DEPRESSURIZATION VALVE AND START SAFETY INJECTION PUMP
			MFWHARD	MFW SYSTEM FAILURE
			SWSTMPE001B	EWS-OPP-001B (B-ESW PUMP) TEST & MAINTENANCE

Table 19.1-136 TRANS with Reactor Trip Resulting Sequence Dominant Cutsets (Sheet 2 of 5)

Rank	Cutsets Freq. (/RY)	Percent	Cutsets	Basic Event Name
6	3.9E-10	2.2%	!13TRANS	GENERAL TRANSIENT
			EFWCF2CVOD008-ALL	EFS-VLV-008A,B FAIL TO OPEN (CCF)
			HPIOO02FWBD-DP2	(HE) FAIL TO OPEN SAFETY DEPRESSURIZATION VALVE AND START SAFETY INJECTION PUMP
			MFWOO02R	(HE) FAIL TO RECOVER MFWS
7	3.4E-10	1.9%	!13TRANS	GENERAL TRANSIENT
			EFWOO01006AB	(HE) FAIL TO CHANGEOVER EFW PIT
			EFWPTAD001A	EFS-RPP-001A (A-EFW PUMP) FAIL TO START
			HPIOO02FWBD	(HE) FAIL TO OPEN SAFETY DEPRESSURIZATION VALVE AND START SAFETY INJECTION PUMP
			MFWHARD	MFW SYSTEM FAILURE
			VCWCHBD001B	VWS-PEQ-001B (B-ESSENTIAL CHILLER UNIT) FAIL TO START
8	3.1E-10	1.8%	!13TRANS	GENERAL TRANSIENT
			EFWOO01006AB	(HE) FAIL TO CHANGEOVER EFW PIT
			EFWTMTA001A	EFS-RPP-001A (A-EFW PUMP) TEST & MAINTENANCE
			HPIOO02FWBD	(HE) FAIL TO OPEN SAFETY DEPRESSURIZATION VALVE AND START SAFETY INJECTION PUMP
			MFWHARD	MFW SYSTEM FAILURE
			SWSTMPE001B	EWS-OPP-001B (B-ESW PUMP) TEST & MAINTENANCE
9	2.7E-10	1.5%	!13TRANS	GENERAL TRANSIENT
			EFWCF4CVOD012-ALL	EFS-VLV-012A,B,C,D FAIL TO OPEN (CCF)
			HPIOO02FWBD-DP2	(HE) FAIL TO OPEN SAFETY DEPRESSURIZATION VALVE AND START SAFETY INJECTION PUMP
			MFWOO02R	(HE) FAIL TO RECOVER MFWS

Table 19.1-136 TRANS with Reactor Trip Resulting Sequence Dominant Cutsets (Sheet 3 of 5)

Rank	Cutsets Freq. (/RY)	Percent	Cutsets	Basic Event Name
10	2.7E-10	1.5%	!13TRANS	GENERAL TRANSIENT
			EFWCF4CVOD018-ALL	EFS-VLV-018A,B,C,D FAIL TO OPEN (CCF)
			HPIOO02FWBD-DP2	(HE) FAIL TO OPEN SAFETY DEPRESSURIZATION VALVE AND START SAFETY INJECTION PUMP
			MFWOO02R	(HE) FAIL TO RECOVER MFWS
11	2.7E-10	1.5%	!13TRANS	GENERAL TRANSIENT
			EFWOO01006AB	(HE) FAIL TO CHANGEOVER EFW PIT
			EFWPTAD001A	EFS-RPP-001A (A-EFW PUMP) FAIL TO START
			HPIOO02FWBD	(HE) FAIL TO OPEN SAFETY DEPRESSURIZATION VALVE AND START SAFETY INJECTION PUMP
			MFWHARD	MFW SYSTEM FAILURE
			VCWTMPZ001B	VWS-PPP-001B (B-ESSENTIAL CHILLED WATER PUMP) TEST & MAINTENANCE
12	2.6E-10	1.5%	!13TRANS	GENERAL TRANSIENT
			EFWCF4MVFC017-ALL	EFS-MOV-017A,B,C,D FAIL TO CONTROL (CCF)
			HPIOO02FWBD	(HE) FAIL TO OPEN SAFETY DEPRESSURIZATION VALVE AND START SAFETY INJECTION PUMP
			MFWHARD	MFW SYSTEM FAILURE
13	2.6E-10	1.5%	!13TRANS	GENERAL TRANSIENT
			EFWOO01006AB	(HE) FAIL TO CHANGEOVER EFW PIT
			EFWTMTA001A	EFS-RPP-001A (A-EFW PUMP) TEST & MAINTENANCE
			HPIOO02FWBD	(HE) FAIL TO OPEN SAFETY DEPRESSURIZATION VALVE AND START SAFETY INJECTION PUMP
			MFWHARD	MFW SYSTEM FAILURE
			VCWCHBD001B	VWS-PEQ-001B (B-ESSENTIAL CHILLER UNIT) FAIL TO START

Table 19.1-136 TRANS with Reactor Trip Resulting Sequence Dominant Cutsets (Sheet 4 of 5)

Rank	Cutsets Freq. (/RY)	Percent	Cutsets	Basic Event Name
14	2.2E-10	1.3%	!13TRANS	GENERAL TRANSIENT
			HPIOO02FWBD-DP2	(HE) FAIL TO OPEN SAFETY DEPRESSURIZATION VALVE AND START SAFETY INJECTION PUMP
			MFWOO02R	(HE) FAIL TO RECOVER MFWS
			RTPCF4ICYRRT7001-ALL	SG WATER LEVEL SENSOR (NARROW RANGE) CCF
15	2.2E-10	1.2%	!13TRANS	GENERAL TRANSIENT
			EFWOO01006AB	(HE) FAIL TO CHANGEOVER EFW PIT
			EFWPTAD001A	EFS-RPP-001A (A-EFW PUMP) FAIL TO START
			HPIOO02FWBD-DP2	(HE) FAIL TO OPEN SAFETY DEPRESSURIZATION VALVE AND START SAFETY INJECTION PUMP
			MFWOO02R	(HE) FAIL TO RECOVER MFWS
			SWSTMPE001B	EWS-OPP-001B (B-ESW PUMP) TEST & MAINTENANCE
16	2.1E-10	1.2%	!13TRANS	GENERAL TRANSIENT
			EFWCF2PTAD001AD-ALL	EFS-RPP-001A,D (EFW PUMP) FAIL TO START (CCF)
			SGNBTSWCCF2	GROUP-2 APPLICATION SOFTWARE CCF
			SGNOO01S	(HE) FAIL TO START SAFETY INJECTION PUMP BY DAS
17	2.1E-10	1.2%	!13TRANS	GENERAL TRANSIENT
			EFWCF2PTAD001AD-ALL	EFS-RPP-001A,D (EFW PUMP) FAIL TO START (CCF)
			HPIOO01SDVDAS	(HE) FAIL TO OPEN SAFETY DEPRESSURIZATION VALVE BY DAS
			SGNBTSWCCF2	GROUP-2 APPLICATION SOFTWARE CCF

Table 19.1-136 TRANS with Reactor Trip Resulting Sequence Dominant Cutsets (Sheet 5 of 5)

Rank	Cutsets Freq. (/RY)	Percent	Cutsets	Basic Event Name
18	2.1E-10	1.2%	!13TRANS	GENERAL TRANSIENT
			EFWOO01006AB	(HE) FAIL TO CHANGEOVER EFW PIT
			EFWTMTA001A	EFS-RPP-001A (A-EFW PUMP) TEST & MAINTENANCE
			HPIOO02FWBD	(HE) FAIL TO OPEN SAFETY DEPRESSURIZATION VALVE AND START SAFETY INJECTION PUMP
			MFWHARD	MFW SYSTEM FAILURE
			VCWTMPZ001B	VWS-PPP-001B (B-ESSENTIAL CHILLED WATER PUMP) TEST & MAINTENANCE
19	1.8E-10	1.0%	!13TRANS	GENERAL TRANSIENT
			EFWOO01006AB	(HE) FAIL TO CHANGEOVER EFW PIT
			EFWPTAD001A	EFS-RPP-001A (A-EFW PUMP) FAIL TO START
			HPIOO02FWBD-DP2	(HE) FAIL TO OPEN SAFETY DEPRESSURIZATION VALVE AND START SAFETY INJECTION PUMP
			MFWOO02R	(HE) FAIL TO RECOVER MFWS
			VCWCHBD001B	VWS-PEQ-001B (B-ESSENTIAL CHILLER UNIT) FAIL TO START
20	1.7E-10	0.9%	!13TRANS	GENERAL TRANSIENT
			EFWOO01006AB	(HE) FAIL TO CHANGEOVER EFW PIT
			EFWTMTA001A	EFS-RPP-001A (A-EFW PUMP) TEST & MAINTENANCE
			HPIOO02FWBD-DP2	(HE) FAIL TO OPEN SAFETY DEPRESSURIZATION VALVE AND START SAFETY INJECTION PUMP
			MFWOO02R	(HE) FAIL TO RECOVER MFWS
			SWSTMPE001B	EWS-OPP-001B (B-ESW PUMP) TEST & MAINTENANCE

Table 19.1-137 SLOCA with Reactor Trip Resulting Sequence Dominant Cutsets (Sheet 1 of 3)

Rank	Cutsets Freq. (/RY)	Percent	Cutsets	Basic Event Name
1	1.0E-09	8.4%	!03SLOCA HPICF4PMAD001-ALL MSPOO02STRV	SMALL PIPE BREAK LOCA SIS-RPP-001A,B,C,D (SI PUMP) FAIL TO START (CCF) (HE) FAIL TO DEPRESSURIZE RCS BY SECONDARY SIDE COOLING
2	3.3E-10	2.7%	!03SLOCA EPSCF4DLLRDG-ALL EPSDLLRDGP2-L2 OPSLOOP	SMALL PIPE BREAK LOCA EPS CLASS 1E GTG A,B,C,D FAIL TO RUN AFTER FIRST HOUR OF OPERATION (CCF) EPS B-AAC GTG FAIL TO LOAD AND RUN AFTER FIRST HOUR OF OPERATION CONSEQUENTIAL LOOP GIVEN A REACTOR TRIP
3	2.3E-10	1.9%	!03SLOCA EPSCF4DLLRDG-ALL EPSTMDGP2 OPSLOOP	SMALL PIPE BREAK LOCA EPS CLASS 1E GTG A,B,C,D FAIL TO RUN AFTER FIRST HOUR OF OPERATION (CCF) EPS B-AAC GTG TEST & MAINTENANCE CONSEQUENTIAL LOOP GIVEN A REACTOR TRIP
4	2.3E-10	1.9%	!03SLOCA EPSCF4DLLRDG-ALL OPSLOOP SWSTMPE001D	SMALL PIPE BREAK LOCA EPS CLASS 1E GTG A,B,C,D FAIL TO RUN AFTER FIRST HOUR OF OPERATION (CCF) CONSEQUENTIAL LOOP GIVEN A REACTOR TRIP EWS-OPP-001D (D-ESW PUMP) TEST & MAINTENANCE
5	1.8E-10	1.5%	!03SLOCA EFWCF2PTAD001AD-ALL HPICF4PMAD001-ALL	SMALL PIPE BREAK LOCA EFS-RPP-001A,D (EFW PUMP) FAIL TO START (CCF) SIS-RPP-001A,B,C,D (SI PUMP) FAIL TO START (CCF)
6	1.3E-10	1.1%	!03SLOCA CWSTMRC001D EPSCF4DLLRDG-ALL OPSLOOP	SMALL PIPE BREAK LOCA NCS-RHX-001D (D-CCW HX) TEST & MAINTENANCE EPS CLASS 1E GTG A,B,C,D FAIL TO RUN AFTER FIRST HOUR OF OPERATION (CCF) CONSEQUENTIAL LOOP GIVEN A REACTOR TRIP

Table 19.1-137 SLOCA with Reactor Trip Resulting Sequence Dominant Cutsets (Sheet 2 of 3)

Rank	Cutsets Freq. (/RY)	Percent	Cutsets	Basic Event Name
7	1.1E-10	0.9%	!03SLOCA	SMALL PIPE BREAK LOCA
			CWSTMPC001D	NCS-RPP-001D (D-CCW PUMP) TEST & MAINTENANCE
			EPSCF4DLLRDG-ALL	EPS CLASS 1E GTG A,B,C,D FAIL TO RUN AFTER FIRST HOUR OF OPERATION (CCF)
			OPSLOOP	CONSEQUENTIAL LOOP GIVEN A REACTOR TRIP
8	1.1E-10	0.9%	!03SLOCA	SMALL PIPE BREAK LOCA
			EPSCF4CBSO52STH-234	EPS 52/STHA,B,C,D (BREAKER) SPURIOUS OPEN (CCF)
9	1.1E-10	0.9%	!03SLOCA	SMALL PIPE BREAK LOCA
			EPSCF4CBSO52LC-123	EPS 52/LCA,B,C,D (BREAKER) SPURIOUS OPEN (CCF)
10	1.1E-10	0.9%	!03SLOCA	SMALL PIPE BREAK LOCA
			EPSCF4CBSO52STL-234	EPS 52/STLA,B,C,D (BREAKER) SPURIOUS OPEN (CCF)
11	9.9E-11	0.8%	!03SLOCA	SMALL PIPE BREAK LOCA
			EPSCF4DLLRDG-123	EPS CLASS 1E GTG A,B,C,D FAIL TO RUN AFTER FIRST HOUR OF OPERATION (CCF)
			EPSOO02RDG	(HE) FAIL TO CONNECT THE ALTERNATE AC POWER SOURCE TO CLASS 1E BUS
			OPSLOOP	CONSEQUENTIAL LOOP GIVEN A REACTOR TRIP
12	9.9E-11	0.8%	!03SLOCA	SMALL PIPE BREAK LOCA
			EPSCBFO52RAT-BCD	EPS 52/RATB,C,D (BREAKER) FAIL TO OPEN (CCF)
			OPSLOOP	CONSEQUENTIAL LOOP GIVEN A REACTOR TRIP
13	9.9E-11	0.8%	!03SLOCA	SMALL PIPE BREAK LOCA
			EPSCBFO52UAT-BCD	EPS 52/UATB,C,D (BREAKER) FAIL TO OPEN (CCF)
			OPSLOOP	CONSEQUENTIAL LOOP GIVEN A REACTOR TRIP
14	8.9E-11	0.7%	!03SLOCA	SMALL PIPE BREAK LOCA
			EPSCF4DLLRDG-ALL	EPS CLASS 1E GTG A,B,C,D FAIL TO RUN AFTER FIRST HOUR OF OPERATION (CCF)
			EPSDLADDGP2	EPS B-AAC GTG FAIL TO START
			OPSLOOP	CONSEQUENTIAL LOOP GIVEN A REACTOR TRIP

Table 19.1-137 SLOCA with Reactor Trip Resulting Sequence Dominant Cutsets (Sheet 3 of 3)

Rank	Cutsets Freq. (/RY)	Percent	Cutsets	Basic Event Name
15	8.8E-11	0.7%	!03SLOCA EFWCF2PMAD001BC-ALL HPICF4PMAD001-ALL	SMALL PIPE BREAK LOCA EFS-RPP-001B,C (EFW PUMP) FAIL TO START (CCF) SIS-RPP-001A,B,C,D (SI PUMP) FAIL TO START (CCF)
16	8.7E-11	0.7%	!03SLOCA HPICF4PMAD001-123 MSPOO02STRV	SMALL PIPE BREAK LOCA SIS-RPP-001A,B,C,D (SI PUMP) FAIL TO START (CCF) (HE) FAIL TO DEPRESSURIZE RCS BY SECONDARY SIDE COOLING
17	8.3E-11	0.7%	!03SLOCA EPSCF4DLLRDG-123 EPSDLLRDGP2-L2 OPSLOOP	SMALL PIPE BREAK LOCA EPS CLASS 1E GTG A,B,C,D FAIL TO RUN AFTER FIRST HOUR OF OPERATION (CCF) EPS B-AAC GTG FAIL TO LOAD AND RUN AFTER FIRST HOUR OF OPERATION CONSEQUENTIAL LOOP GIVEN A REACTOR TRIP
18	8.3E-11	0.7%	!03SLOCA SWSCF2PMBD001BD-ALL SWSSTPRST05	SMALL PIPE BREAK LOCA EWS-OPP-001B,D (ESW PUMP) FAIL TO START (CCF) EWS-ST05 (STRAINER) PLUG
19	7.8E-11	0.6%	!03SLOCA HPICF4PMSR001-ALL MSPOO02STRV	SMALL PIPE BREAK LOCA SIS-RPP-001A,B,C,D (SI PUMP) FAIL TO RUN DURING FIRST HOUR OF OPERATION (CCF) (HE) FAIL TO DEPRESSURIZE RCS BY SECONDARY SIDE COOLING
20	7.5E-11	0.6%	!03SLOCA EPSCF4DLLRDG-ALL HPITMPI001D OPSLOOP	SMALL PIPE BREAK LOCA EPS CLASS 1E GTG A,B,C,D FAIL TO RUN AFTER FIRST HOUR OF OPERATION (CCF) SIS-RPP-001D (D-SI PUMP) TEST & MAINTENANCE CONSEQUENTIAL LOOP GIVEN A REACTOR TRIP

Table 19.1-138 ATWS without Reactor Trip Resulting Sequence Dominant Cutsets (Sheet 1 of 3)

Rank	Cutsets Freq. (/RY)	Percent	Cutsets	Basic Event Name
1	1.2E-09	10.0%	!20ATWS RTPCRDF SWSTMPE001B	ANTICIPATED TRANSIENT ROD INJECTION FAILURE (4< RODS) EWS-OPP-001B (B-ESW PUMP) TEST & MAINTENANCE
2	1.0E-09	8.3%	!20ATWS RTPCRDF VCWCHBD001B	ANTICIPATED TRANSIENT ROD INJECTION FAILURE (4< RODS) VWS-PEQ-001B (B-ESSENTIAL CHILLER UNIT) FAIL TO START
3	8.0E-10	6.7%	!20ATWS RTPCRDF VCWTMPZ001B	ANTICIPATED TRANSIENT ROD INJECTION FAILURE (4< RODS) VWS-PPP-001B (B-ESSENTIAL CHILLED WATER PUMP) TEST & MAINTENANCE
4	6.5E-10	5.5%	!20ATWS EFWPTAD001D RTPCRDF	ANTICIPATED TRANSIENT EFS-RPP-001D (D-EFW PUMP) FAIL TO START ROD INJECTION FAILURE (4< RODS)
5	6.5E-10	5.5%	!20ATWS EFWPTAD001A RTPCRDF	ANTICIPATED TRANSIENT EFS-RPP-001A (A-EFW PUMP) FAIL TO START ROD INJECTION FAILURE (4< RODS)
6	5.0E-10	4.2%	!20ATWS EFWTMTA001D RTPCRDF	ANTICIPATED TRANSIENT EFS-RPP-001D (D-EFW PUMP) TEST & MAINTENANCE ROD INJECTION FAILURE (4< RODS)
7	5.0E-10	4.2%	!20ATWS EFWTMTA001A RTPCRDF	ANTICIPATED TRANSIENT EFS-RPP-001A (A-EFW PUMP) TEST & MAINTENANCE ROD INJECTION FAILURE (4< RODS)
8	4.0E-10	3.3%	!20ATWS EFWTMPA001C RTPCRDF	ANTICIPATED TRANSIENT EFS-RPP-001C (C-EFW PUMP) TEST & MAINTENANCE ROD INJECTION FAILURE (4< RODS)
9	4.0E-10	3.3%	!20ATWS EFWTMPA001B RTPCRDF	ANTICIPATED TRANSIENT EFS-RPP-001B (B-EFW PUMP) TEST & MAINTENANCE ROD INJECTION FAILURE (4< RODS)

Table 19.1-138 ATWS without Reactor Trip Resulting Sequence Dominant Cutsets (Sheet 2 of 3)

Rank	Cutsets Freq. (/RY)	Percent	Cutsets	Basic Event Name
10	2.8E-10	2.3%	!20ATWS	ANTICIPATED TRANSIENT
			RTPCF4AXFFRT-ALL	REACTOR TRIP BREAKER A1,A2,B1,B2,C1,C2,D1,D2 (CCF)
			RTPDASF	DAS FAILURE
			SWSTMPE001B	EWS-OPP-001B (B-ESW PUMP) TEST & MAINTENANCE
11	2.5E-10	2.1%	!20ATWS	ANTICIPATED TRANSIENT
			HVATMAH401B	VRS-RAH-401B (B-EFW PUMP AIR HANDLING UNIT) TEST & MAINTENANCE
			RTPCRDF	ROD INJECTION FAILURE (4< RODS)
12	2.5E-10	2.1%	!20ATWS	ANTICIPATED TRANSIENT
			HVATMAH401C	VRS-RAH-401C (C-EFW PUMP AIR HANDLING UNIT) TEST & MAINTENANCE
			RTPCRDF	ROD INJECTION FAILURE (4< RODS)
13	2.4E-10	2.0%	!20ATWS	ANTICIPATED TRANSIENT
			EFWPTSR001D	EFS-RPP-001D (D-EFW PUMP) FAIL TO RUN DURING FIRST HOUR OF OPERATION
			RTPCRDF	ROD INJECTION FAILURE (4< RODS)
14	2.4E-10	2.0%	!20ATWS	ANTICIPATED TRANSIENT
			EFWPTSR001A	EFS-RPP-001A (A-EFW PUMP) FAIL TO RUN DURING FIRST HOUR OF OPERATION
			RTPCRDF	ROD INJECTION FAILURE (4< RODS)
15	2.4E-10	2.0%	!20ATWS	ANTICIPATED TRANSIENT
			HVAAHSR401C	VRS-RAH-401C (C-EFW PUMP AIR HANDLING UNIT) FAIL TO RUN DURING FIRST HOUR OF OPERATION
			RTPCRDF	ROD INJECTION FAILURE (4< RODS)
16	2.4E-10	2.0%	!20ATWS	ANTICIPATED TRANSIENT
			HVAAHSR401B	VRS-RAH-401B (B-EFW PUMP AIR HANDLING UNIT) FAIL TO RUN DURING FIRST HOUR OF OPERATION
			RTPCRDF	ROD INJECTION FAILURE (4< RODS)

Table 19.1-138 ATWS without Reactor Trip Resulting Sequence Dominant Cutsets (Sheet 3 of 3)

Rank	Cutsets Freq. (/RY)	Percent	Cutsets	Basic Event Name
17	2.3E-10	2.0%	!20ATWS RTPCF4AXFFRT-ALL RTPDASF VCWCHBD001B	ANTICIPATED TRANSIENT REACTOR TRIP BREAKER A1,A2,B1,B2,C1,C2,D1,D2 (CCF) DAS FAILURE VWS-PEQ-001B (B-ESSENTIAL CHILLER UNIT) FAIL TO START
18	2.1E-10	1.7%	!20ATWS RTPCRDF VCWCHYR001C	ANTICIPATED TRANSIENT ROD INJECTION FAILURE (4< RODS) VWS-PEQ-001C (C-ESSENTIAL CHILLER UNIT) FAIL TO RUN
19	2.1E-10	1.7%	!20ATWS RTPCRDF VCWCHYR001B	ANTICIPATED TRANSIENT ROD INJECTION FAILURE (4< RODS) VWS-PEQ-001B (B-ESSENTIAL CHILLER UNIT) FAIL TO RUN
20	2.0E-10	1.7%	!20ATWS RTPCRDF VCWPMBD001B	ANTICIPATED TRANSIENT ROD INJECTION FAILURE (4< RODS) VWS-PPP-001B (B-ESSENTIAL CHILLED WATER PUMP) FAIL TO START

Table 19.1-139 LOOP with Reactor Trip Resulting Sequence Dominant Cutsets (Sheet 1 of 5)

Rank	Cutsets Freq. (/RY)	Percent	Cutsets	Basic Event Name
1	3.6E-10	3.2%	!19LOOP EFWCF2CVOD008-ALL HPIOO02FWBD	LOSS OF OFFSITE POWER EFS-VLV-008A,B FAIL TO OPEN (CCF) (HE) FAIL TO OPEN SAFETY DEPRESSURIZATION VALVE AND START SAFETY INJECTION PUMP
2	2.8E-10	2.5%	!19LOOP EFWOO01006AB EFWPTAD001D EPSDLLRDGC HPIOO02FWBD	LOSS OF OFFSITE POWER (HE) FAIL TO CHANGEOVER EFW PIT EFS-RPP-001D (D-EFW PUMP) FAIL TO START EPS C-CLASS 1E GTG FAIL TO LOAD AND RUN AFTER FIRST HOUR OF OPERATION (HE) FAIL TO OPEN SAFETY DEPRESSURIZATION VALVE AND START SAFETY INJECTION PUMP
3	2.8E-10	2.5%	!19LOOP EFWOO01006AB EFWPTAD001A EPSDLLRDGB HPIOO02FWBD	LOSS OF OFFSITE POWER (HE) FAIL TO CHANGEOVER EFW PIT EFS-RPP-001A (A-EFW PUMP) FAIL TO START EPS B-CLASS 1E GTG FAIL TO LOAD AND RUN AFTER FIRST HOUR OF OPERATION (HE) FAIL TO OPEN SAFETY DEPRESSURIZATION VALVE AND START SAFETY INJECTION PUMP
4	2.5E-10	2.2%	!19LOOP EFWCF4CVOD018-ALL HPIOO02FWBD	LOSS OF OFFSITE POWER EFS-VLV-018A,B,C,D FAIL TO OPEN (CCF) (HE) FAIL TO OPEN SAFETY DEPRESSURIZATION VALVE AND START SAFETY INJECTION PUMP
5	2.5E-10	2.2%	!19LOOP EFWCF4CVOD012-ALL HPIOO02FWBD	LOSS OF OFFSITE POWER EFS-VLV-012A,B,C,D FAIL TO OPEN (CCF) (HE) FAIL TO OPEN SAFETY DEPRESSURIZATION VALVE AND START SAFETY INJECTION PUMP

Table 19.1-139 LOOP with Reactor Trip Resulting Sequence Dominant Cutsets (Sheet 2 of 5)

Rank	Cutsets Freq. (/RY)	Percent	Cutsets	Basic Event Name
6	2.1E-10	1.9%	!19LOOP	LOSS OF OFFSITE POWER
			EFWOO01006AB	(HE) FAIL TO CHANGEOVER EFW PIT
			EFWTMTA001A	EFS-RPP-001A (A-EFW PUMP) TEST & MAINTENANCE
			EPSDLLRDGB	EPS B-CLASS 1E GTG FAIL TO LOAD AND RUN AFTER FIRST HOUR OF OPERATION
			HPIOO02FWBD	(HE) FAIL TO OPEN SAFETY DEPRESSURIZATION VALVE AND START SAFETY INJECTION PUMP
7	2.1E-10	1.9%	!19LOOP	LOSS OF OFFSITE POWER
			EFWOO01006AB	(HE) FAIL TO CHANGEOVER EFW PIT
			EFWTMTA001D	EFS-RPP-001D (D-EFW PUMP) TEST & MAINTENANCE
			EPSDLLRDGC	EPS C-CLASS 1E GTG FAIL TO LOAD AND RUN AFTER FIRST HOUR OF OPERATION
			HPIOO02FWBD	(HE) FAIL TO OPEN SAFETY DEPRESSURIZATION VALVE AND START SAFETY INJECTION PUMP
8	2.1E-10	1.8%	!19LOOP	LOSS OF OFFSITE POWER
			HPIOO02FWBD	(HE) FAIL TO OPEN SAFETY DEPRESSURIZATION VALVE AND START SAFETY INJECTION PUMP
			RTPCF4ICYRRT7001-ALL	SG WATER LEVEL SENSOR (NARROW RANGE) CCF
9	2.0E-10	1.8%	!19LOOP	LOSS OF OFFSITE POWER
			EFWOO01006AB	(HE) FAIL TO CHANGEOVER EFW PIT
			EFWPTAD001A	EFS-RPP-001A (A-EFW PUMP) FAIL TO START
			HPIOO02FWBD	(HE) FAIL TO OPEN SAFETY DEPRESSURIZATION VALVE AND START SAFETY INJECTION PUMP
			SWSTMPE001B	EWS-OPP-001B (B-ESW PUMP) TEST & MAINTENANCE

Table 19.1-139 LOOP with Reactor Trip Resulting Sequence Dominant Cutsets (Sheet 3 of 5)

Rank	Cutsets Freq. (/RY)	Percent	Cutsets	Basic Event Name
10	2.0E-10	1.8%	!19LOOP	LOSS OF OFFSITE POWER
			EFWOO01006AB	(HE) FAIL TO CHANGEOVER EFW PIT
			EFWPTAD001D	EFS-RPP-001D (D-EFW PUMP) FAIL TO START
			EPSTMDGC	EPS C-CLASS 1E GTG TEST & MAINTENANCE
			HPIOO02FWBD	(HE) FAIL TO OPEN SAFETY DEPRESSURIZATION VALVE AND START SAFETY INJECTION PUMP
11	2.0E-10	1.8%	!19LOOP	LOSS OF OFFSITE POWER
			EFWOO01006AB	(HE) FAIL TO CHANGEOVER EFW PIT
			EFWPTAD001A	EFS-RPP-001A (A-EFW PUMP) FAIL TO START
			EPSTMDGB	EPS B-CLASS 1E GTG TEST & MAINTENANCE
			HPIOO02FWBD	(HE) FAIL TO OPEN SAFETY DEPRESSURIZATION VALVE AND START SAFETY INJECTION PUMP
12	1.7E-10	1.5%	!19LOOP	LOSS OF OFFSITE POWER
			EFWOO01006AB	(HE) FAIL TO CHANGEOVER EFW PIT
			EFWPTAD001A	EFS-RPP-001A (A-EFW PUMP) FAIL TO START
			HPIOO02FWBD	(HE) FAIL TO OPEN SAFETY DEPRESSURIZATION VALVE AND START SAFETY INJECTION PUMP
			VCWCHBD001B	VWS-PEQ-001B (B-ESSENTIAL CHILLER UNIT) FAIL TO START
13	1.5E-10	1.4%	!19LOOP	LOSS OF OFFSITE POWER
			EFWOO01006AB	(HE) FAIL TO CHANGEOVER EFW PIT
			EFWTMTA001A	EFS-RPP-001A (A-EFW PUMP) TEST & MAINTENANCE
			HPIOO02FWBD	(HE) FAIL TO OPEN SAFETY DEPRESSURIZATION VALVE AND START SAFETY INJECTION PUMP
			SWSTMPE001B	EWS-OPP-001B (B-ESW PUMP) TEST & MAINTENANCE

Table 19.1-139 LOOP with Reactor Trip Resulting Sequence Dominant Cutsets (Sheet 4 of 5)

Rank	Cutsets Freq. (/RY)	Percent	Cutsets	Basic Event Name
14	1.5E-10	1.4%	!19LOOP EFWOO01006AB EFWTMTA001D EPSTMDGC HPIOO02FWBD	LOSS OF OFFSITE POWER (HE) FAIL TO CHANGEOVER EFW PIT EFS-RPP-001D (D-EFW PUMP) TEST & MAINTENANCE EPS C-CLASS 1E GTG TEST & MAINTENANCE (HE) FAIL TO OPEN SAFETY DEPRESSURIZATION VALVE AND START SAFETY INJECTION PUMP
15	1.5E-10	1.4%	!19LOOP EFWOO01006AB EFWTMTA001A EPSTMDGB HPIOO02FWBD	LOSS OF OFFSITE POWER (HE) FAIL TO CHANGEOVER EFW PIT EFS-RPP-001A (A-EFW PUMP) TEST & MAINTENANCE EPS B-CLASS 1E GTG TEST & MAINTENANCE (HE) FAIL TO OPEN SAFETY DEPRESSURIZATION VALVE AND START SAFETY INJECTION PUMP
16	1.3E-10	1.2%	!19LOOP EFWOO01006AB EFWPTAD001A HPIOO02FWBD VCWTMPZ001B	LOSS OF OFFSITE POWER (HE) FAIL TO CHANGEOVER EFW PIT EFS-RPP-001A (A-EFW PUMP) FAIL TO START (HE) FAIL TO OPEN SAFETY DEPRESSURIZATION VALVE AND START SAFETY INJECTION PUMP VWS-PPP-001B (B-ESSENTIAL CHILLED WATER PUMP) TEST & MAINTENANCE
17	1.3E-10	1.1%	!19LOOP EFWCF4MVFC017-ALL HPIOO02FWBD	LOSS OF OFFSITE POWER EFS-MOV-017A,B,C,D FAIL TO CONTROL (CCF) (HE) FAIL TO OPEN SAFETY DEPRESSURIZATION VALVE AND START SAFETY INJECTION PUMP

Table 19.1-139 LOOP with Reactor Trip Resulting Sequence Dominant Cutsets (Sheet 5 of 5)

Rank	Cutsets Freq. (/RY)	Percent	Cutsets	Basic Event Name
18	1.3E-10	1.1%	!19LOOP	LOSS OF OFFSITE POWER
			EFWOO01006AB	(HE) FAIL TO CHANGEOVER EFW PIT
			EFWTMTA001A	EFS-RPP-001A (A-EFW PUMP) TEST & MAINTENANCE
			HPIOO02FWBD	(HE) FAIL TO OPEN SAFETY DEPRESSURIZATION VALVE AND START SAFETY INJECTION PUMP
			VCWCHBD001B	VWS-PEQ-001B (B-ESSENTIAL CHILLER UNIT) FAIL TO START
19	1.0E-10	0.9%	!19LOOP	LOSS OF OFFSITE POWER
			EFWOO01006AB	(HE) FAIL TO CHANGEOVER EFW PIT
			EFWTMTA001A	EFS-RPP-001A (A-EFW PUMP) TEST & MAINTENANCE
			HPIOO02FWBD	(HE) FAIL TO OPEN SAFETY DEPRESSURIZATION VALVE AND START SAFETY INJECTION PUMP
			VCWTMPZ001B	VWS-PPP-001B (B-ESSENTIAL CHILLED WATER PUMP) TEST & MAINTENANCE
20	1.0E-10	0.9%	!19LOOP	LOSS OF OFFSITE POWER
			EFWOO01006AB	(HE) FAIL TO CHANGEOVER EFW PIT
			EFWPTSR001D	EFS-RPP-001D (D-EFW PUMP) FAIL TO RUN DURING FIRST HOUR OF OPERATION
			EPSDLLRDGC	EPS C-CLASS 1E GTG FAIL TO LOAD AND RUN AFTER FIRST HOUR OF OPERATION
			HPIOO02FWBD	(HE) FAIL TO OPEN SAFETY DEPRESSURIZATION VALVE AND START SAFETY INJECTION PUMP

Table 19.1-140 SLOCA with Reactor Trip Resulting Sequence Dominant Cutsets (Sheet 1 of 3)

Rank	Cutsets Freq. (/RY)	Percent	Cutsets	Basic Event Name
1	6.0E-09	58.9%	!03SLOCA NCCOO02CCW RSSCF4MVOD145-ALL	SMALL PIPE BREAK LOCA (HE) FAIL TO OPERATE ALTERNATE C/V COOLING BY C/V FAN NCS-MOV-145A,B,C,D FAIL TO OPEN (CCF)
2	3.6E-10	3.6%	!03SLOCA NCCAVOD1212 RSSCF4MVOD145-ALL	SMALL PIPE BREAK LOCA NCS-PCV-1212 FAIL TO OPEN NCS-MOV-145A,B,C,D FAIL TO OPEN (CCF)
3	3.0E-10	3.0%	!03SLOCA NCCMVOD403 RSSCF4MVOD145-ALL	SMALL PIPE BREAK LOCA VWS-MOV-403 FAIL TO OPEN NCS-MOV-145A,B,C,D FAIL TO OPEN (CCF)
4	3.0E-10	3.0%	!03SLOCA NCCMVOD407 RSSCF4MVOD145-ALL	SMALL PIPE BREAK LOCA VWS-MOV-407 FAIL TO OPEN NCS-MOV-145A,B,C,D FAIL TO OPEN (CCF)
5	3.0E-10	3.0%	!03SLOCA NCCMVOD411A RSSCF4MVOD145-ALL	SMALL PIPE BREAK LOCA VWS-MOV-411A FAIL TO OPEN NCS-MOV-145A,B,C,D FAIL TO OPEN (CCF)
6	3.0E-10	3.0%	!03SLOCA NCCMVOD411D RSSCF4MVOD145-ALL	SMALL PIPE BREAK LOCA VWS-MOV-411D FAIL TO OPEN NCS-MOV-145A,B,C,D FAIL TO OPEN (CCF)
7	3.0E-10	3.0%	!03SLOCA NCCMVOD425 RSSCF4MVOD145-ALL	SMALL PIPE BREAK LOCA VWS-MOV-425 FAIL TO OPEN NCS-MOV-145A,B,C,D FAIL TO OPEN (CCF)
8	3.0E-10	3.0%	!03SLOCA NCCMVCD414 RSSCF4MVOD145-ALL	SMALL PIPE BREAK LOCA VWS-MOV-414 FAIL TO CLOSE NCS-MOV-145A,B,C,D FAIL TO OPEN (CCF)
9	3.0E-10	3.0%	!03SLOCA NCCMVOD422 RSSCF4MVOD145-ALL	SMALL PIPE BREAK LOCA VWS-MOV-422 FAIL TO OPEN NCS-MOV-145A,B,C,D FAIL TO OPEN (CCF)

Table 19.1-140 SLOCA with Reactor Trip Resulting Sequence Dominant Cutsets (Sheet 2 of 3)

Rank	Cutsets Freq. (/RY)	Percent	Cutsets	Basic Event Name
10	3.0E-10	3.0%	!03SLOCA NCCMVOD411B RSSCF4MVOD145-ALL	SMALL PIPE BREAK LOCA VWS-MOV-411B FAIL TO OPEN NCS-MOV-145A,B,C,D FAIL TO OPEN (CCF)
11	3.0E-10	3.0%	!03SLOCA NCCMVOD411C RSSCF4MVOD145-ALL	SMALL PIPE BREAK LOCA VWS-MOV-411C FAIL TO OPEN NCS-MOV-145A,B,C,D FAIL TO OPEN (CCF)
12	3.0E-10	3.0%	!03SLOCA NCCMVOD424 RSSCF4MVOD145-ALL	SMALL PIPE BREAK LOCA VWS-MOV-424 FAIL TO OPEN NCS-MOV-145A,B,C,D FAIL TO OPEN (CCF)
13	2.4E-10	2.4%	!03SLOCA NCCOO04PICA1212 RSSCF4MVOD145-ALL	SMALL PIPE BREAK LOCA (HE) NCC MISCALIBRATION OF NCS-PICA-1212 NCS-MOV-145A,B,C,D FAIL TO OPEN (CCF)
14	2.4E-10	2.4%	!03SLOCA NCCOO04PI1254 RSSCF4MVOD145-ALL	SMALL PIPE BREAK LOCA (HE) NCC MISCALIBRATION OF PI-1254 NCS-MOV-145A,B,C,D FAIL TO OPEN (CCF)
15	3.0E-11	0.3%	!03SLOCA RSSCF4MVOD145-ALL SGNBTSWCCF3	SMALL PIPE BREAK LOCA NCS-MOV-145A,B,C,D FAIL TO OPEN (CCF) NON-SAFETY (PCMS) APPLICATION SOFTWARE CCF
16	2.9E-11	0.3%	!03SLOCA OPS----PRDF OPSLOOP RSSCF4MVOD145-ALL	SMALL PIPE BREAK LOCA OFFSITE POWER RECOVERY FAILURE WITHIN 24 HOUR CONSEQUENTIAL LOOP GIVEN A REACTOR TRIP NCS-MOV-145A,B,C,D FAIL TO OPEN (CCF)
17	2.8E-11	0.3%	!03SLOCA EPSDLLRDGP1-L2 OPSLOOP RSSCF4MVOD145-ALL	SMALL PIPE BREAK LOCA EPS A-AAC GTG FAIL TO LOAD AND RUN AFTER FIRST HOUR OF OPERATION CONSEQUENTIAL LOOP GIVEN A REACTOR TRIP NCS-MOV-145A,B,C,D FAIL TO OPEN (CCF)

Table 19.1-140 SLOCA with Reactor Trip Resulting Sequence Dominant Cutsets (Sheet 3 of 3)

Rank	Cutsets Freq. (/RY)	Percent	Cutsets	Basic Event Name
18	2.8E-11	0.3%	!03SLOCA	SMALL PIPE BREAK LOCA
			EPSDLLRDGP2-L2	EPS B-AAC GTG FAIL TO LOAD AND RUN AFTER FIRST HOUR OF OPERATION
			OPSLOOP	CONSEQUENTIAL LOOP GIVEN A REACTOR TRIP
			RSSCF4MVOD145-ALL	NCS-MOV-145A,B,C,D FAIL TO OPEN (CCF)
19	1.9E-11	0.2%	!03SLOCA	SMALL PIPE BREAK LOCA
			EPSTMDGP2	EPS B-AAC GTG TEST & MAINTENANCE
			OPSLOOP	CONSEQUENTIAL LOOP GIVEN A REACTOR TRIP
			RSSCF4MVOD145-ALL	NCS-MOV-145A,B,C,D FAIL TO OPEN (CCF)
20	1.9E-11	0.2%	!03SLOCA	SMALL PIPE BREAK LOCA
			EPSTMDGP1	EPS A-AAC GTG TEST & MAINTENANCE
			OPSLOOP	CONSEQUENTIAL LOOP GIVEN A REACTOR TRIP
			RSSCF4MVOD145-ALL	NCS-MOV-145A,B,C,D FAIL TO OPEN (CCF)

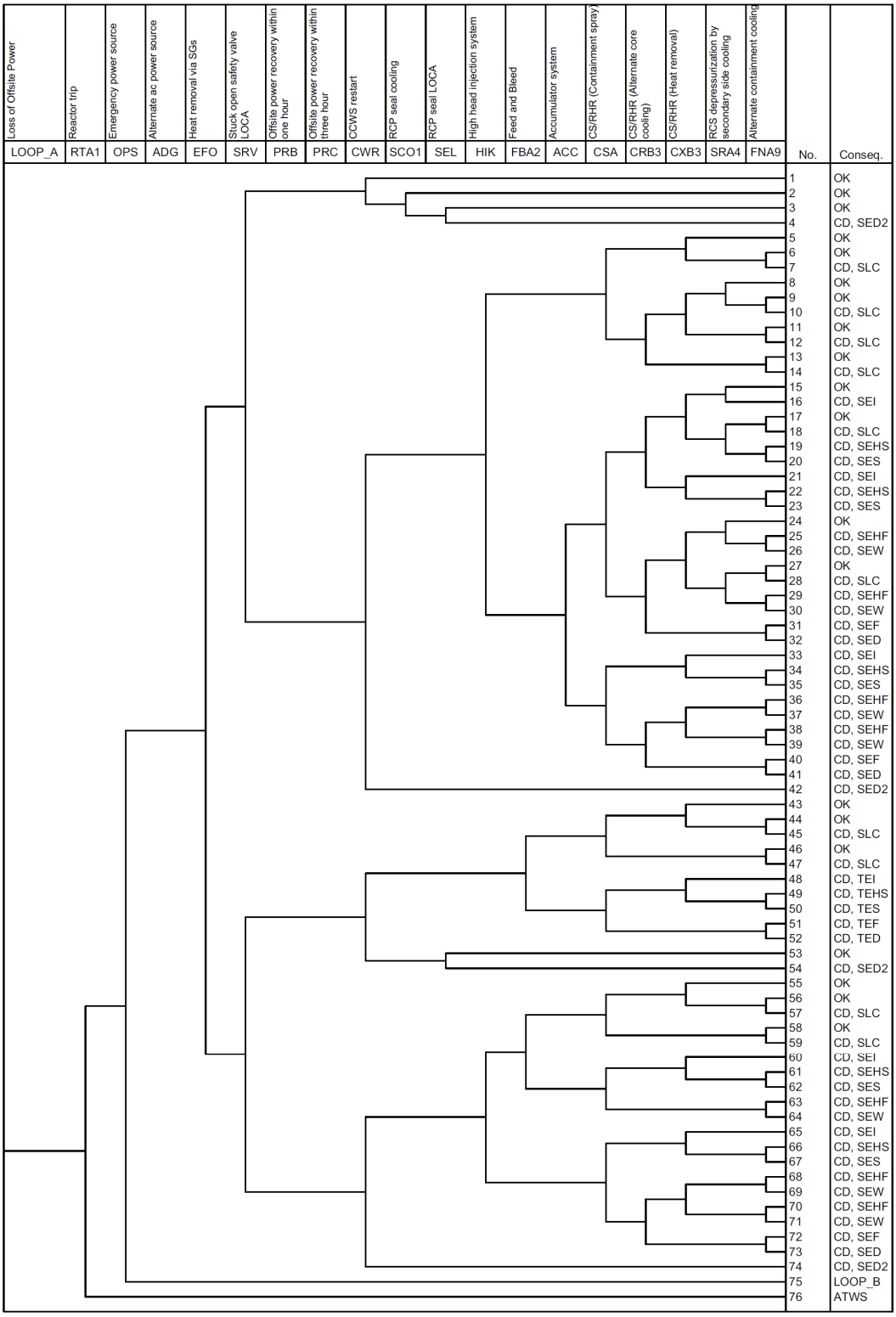

Figure 19.1-1 Event Tree (Sheet 13 of 19) (Loss of Offsite Power [1/4])

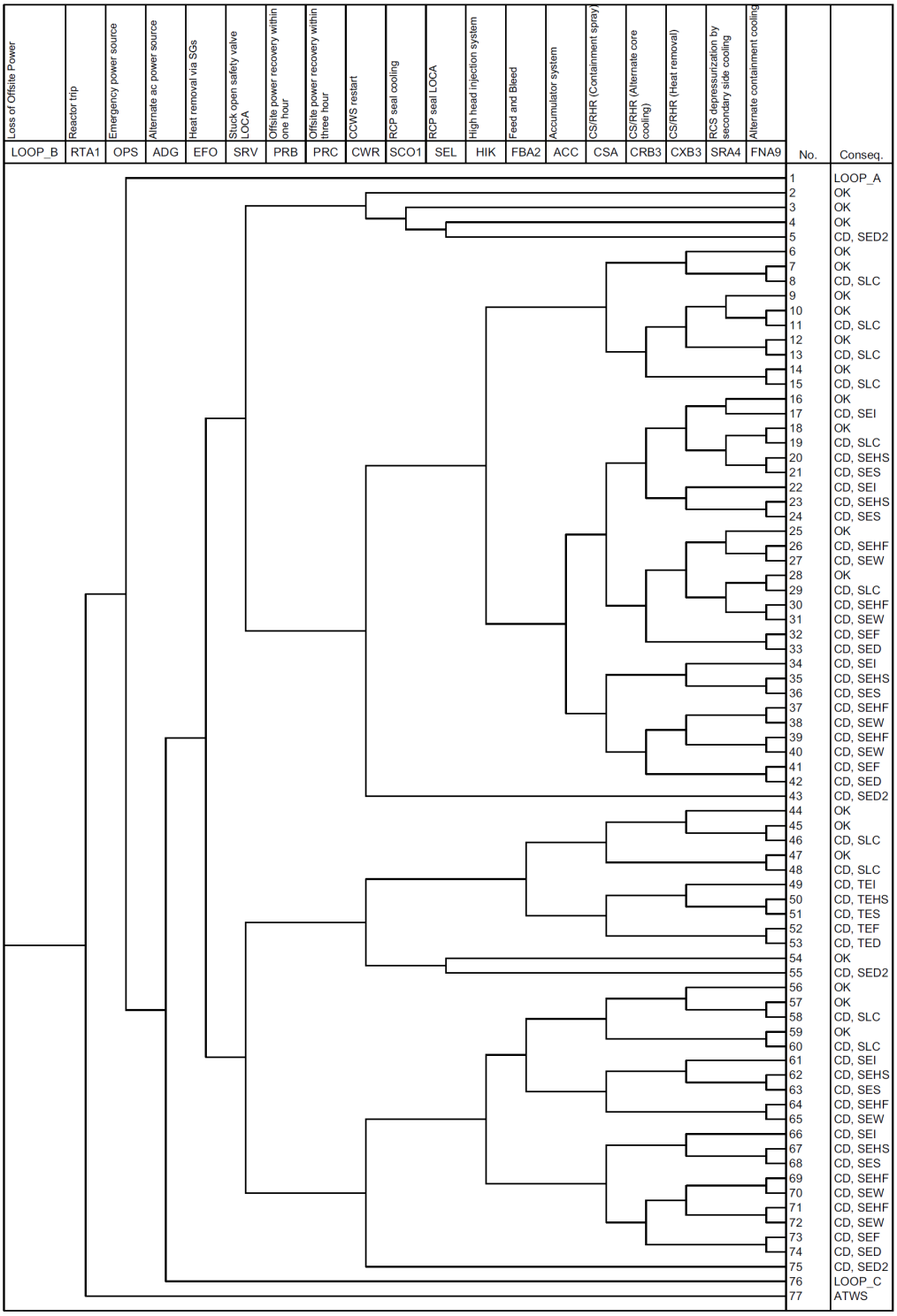

Figure 19.1-1 Event Tree (Sheet 14 of 19) (Loss of Offsite Power [2/4])

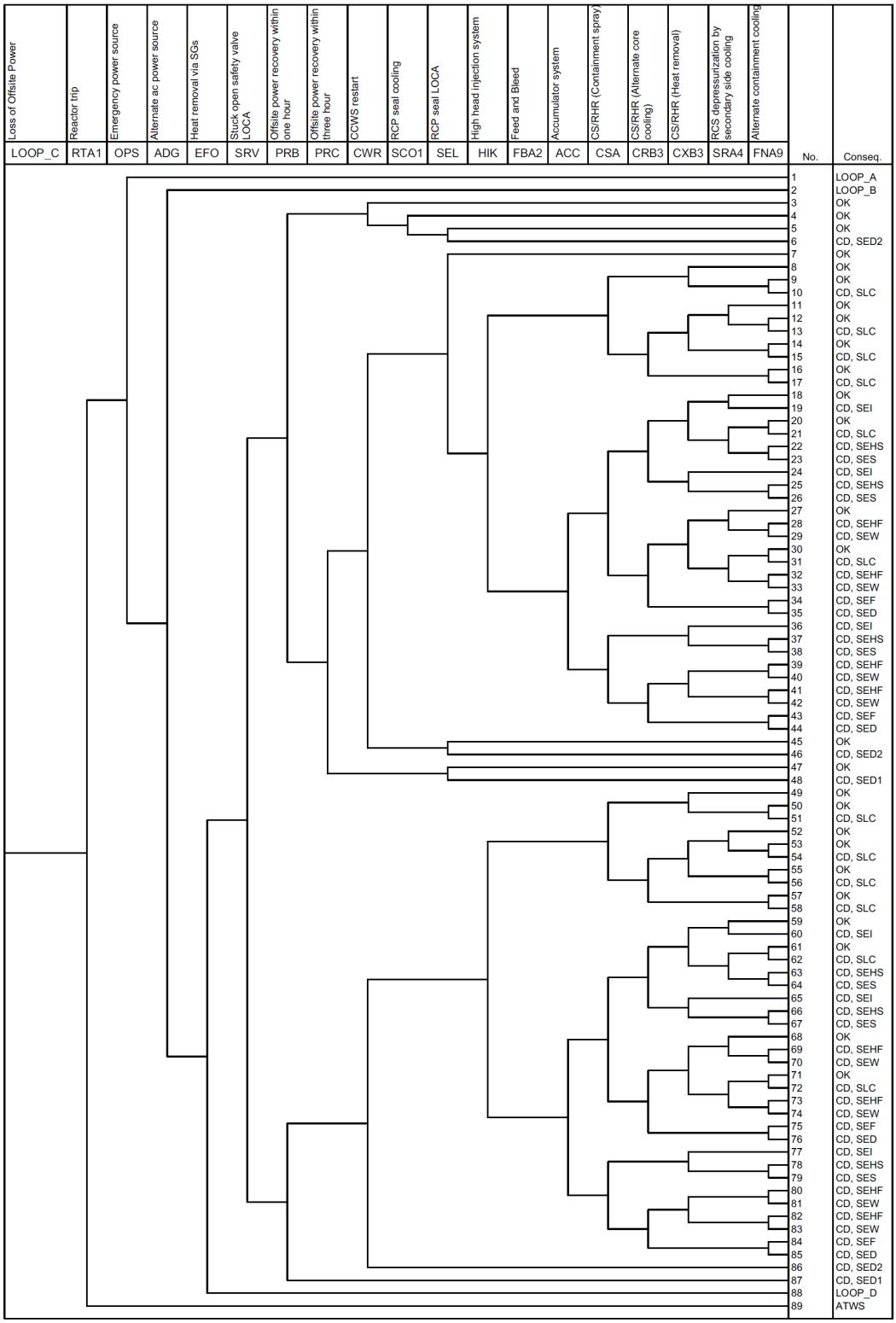

Figure 19.1-1 Event Tree (Sheet 15 of 19) (Loss of Offsite Power [3/4])

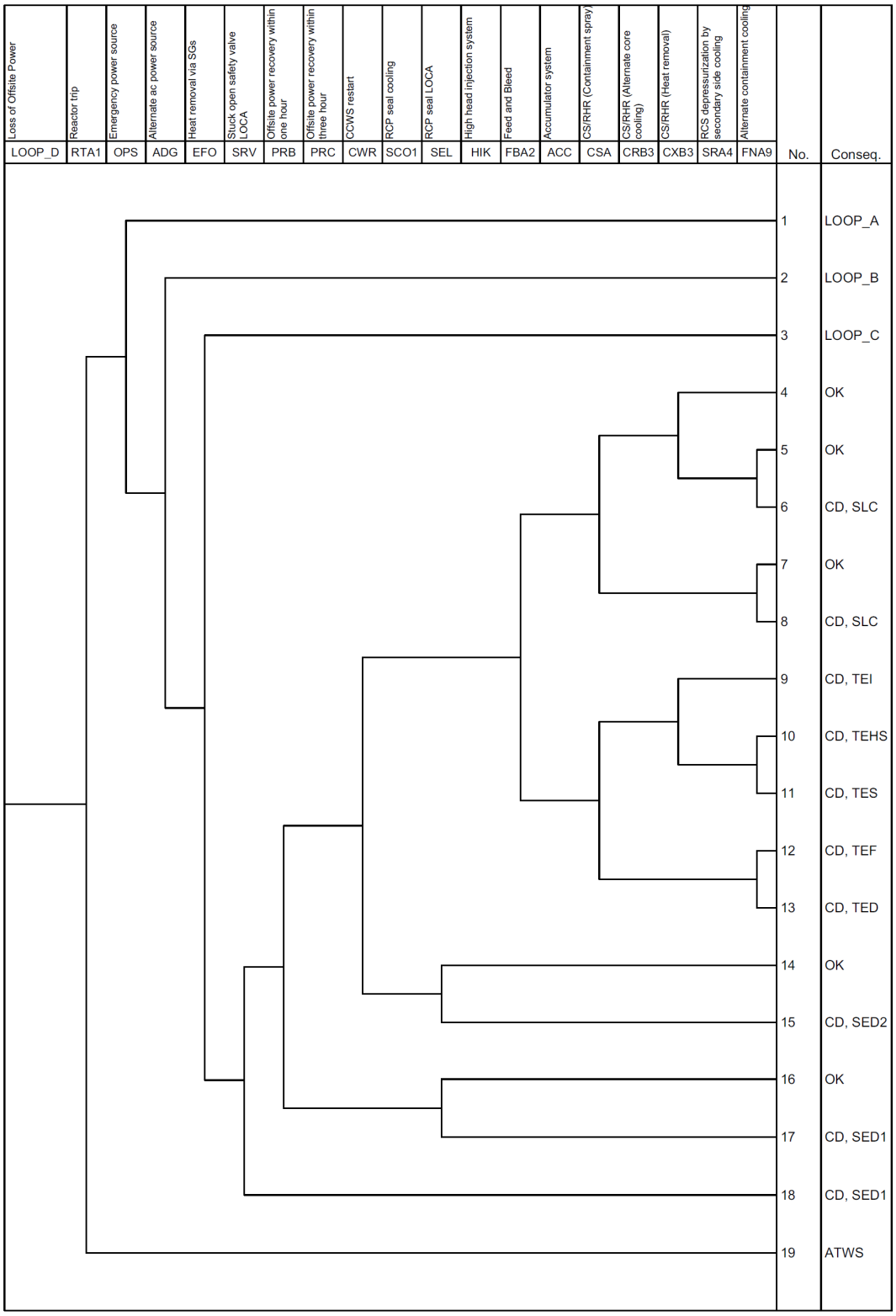

Figure 19.1-1 Event Tree (Sheet 16 of 19) (Loss of Offsite Power [4/4])

The selected systems and components include containment penetrations, hydrogen igniters, depressurization valves used for severe accident mitigation, and containment pressure ~~monitors~~(wide range).

Systems / Components	Timeframe required to be functional
(1) Containment penetration	After core damage
(2) Hydrogen igniter	After core damage
(3) Depressurization valve	After core damage till reactor vessel failure
(4) Containment pressure (wide range)	After core damage

An environmental condition under hydrogen burning by hydrogen ignition system operation has been evaluated using GOTHIC code. Detailed evaluation results are described in Section 15.7 of the PRA technical report "US-APWR Probabilistic Risk Assessment" (Reference 19.2-15). The environmental conditions above four systems/components must satisfy are following. ~~The peak temperature is approximately 1000°F in some compartments and in a specific timing such as core melt, RCS depressurization, and reactor vessel failure. The analysis results show that the duration with very high temperature such as 1000°F is considered sufficiently short and does not significantly damage the devices. The temperatures in most of the compartments are around 200°F.~~

(1) Containment penetration

The containment penetration to be important during severe accident is the electrical penetration which provides power to the hydrogen igniters. Mechanical penetrations are made by steel and tightly welded with the containment body. It has very strong robustness against temperature and pressure in nature. The containment penetrations considered in the equipment survivability study are therefore limited to the specific electrical penetration which is utilized as power supply to hydrogen igniters. Other electrical and mechanical penetrations are eliminated from the scope of this study.

The highest temperature where the considered electrical penetration exists is evaluated as slightly lower than 400°F and the steady-state temperature is around 200°F, which is lower than the containment design temperature of 300°F. The highest pressure is evaluated approximately 50 psig, which is lower than the containment design pressure of 68 psig. The amount of hydrogen burnt in this analysis is conservatively assumed to be 100% active fuel length cladding reaction, hence this analysis widely covers various uncertainties involved in the hydrogen generation and burn.

Considering the above findings, the environmental condition required for the electrical penetration is determined that it must maintain its functions to supply power to hydrogen igniters and to maintain the leak-tightness for greater than 24 hours under the containment design pressure of 68psig and the design temperature of 300°F, with considering the instantaneous temperature rise due to hydrogen burn with its peak temperature to be as high as 400°F.

(2) Hydrogen igniter

The hydrogen igniters can perform its function during and after exposure to the environmental conditions created by hydrogen burn. Through the equipment survivability study, it is evaluated that the peak temperature of containment atmosphere becomes as high as approximately 1200°F, and the temperature rise from 400°F and reduced back to 400°F due to hydrogen burn takes approximately 10 minutes. The amount of hydrogen burnt in this analysis is conservatively assumed to be 100% active fuel length cladding reaction, hence this analysis broadly covers various uncertainties involved in the hydrogen generation and burn.

Therefore, in terms of the equipment survivability, it is required that the hydrogen ignition system must keep its function longer than 10 minutes under the condition of containment atmosphere with higher than 400°F and its peak temperature to be as high as 1200°F.

(3) Depressurization valve

The severe accident scenarios have been further evaluated in the equipment survivability study, when and what conditions the depressurization valve (DV) is considered significant to establish and maintain safe shutdown and containment structural integrity. LOCA scenario is eliminated in nature, and only transient scenarios with high RCS pressure are in the focus. Accordingly, it has been concluded that the hydrogen burning condition does not directly affect the functionality of DV, which is to depressurize RCS after core is significantly damaged. This is because the condition of hydrogen-burn is resulted from the DV opening operation. DV is utilized to reduce the RCS pressure, i.e. if DV is not opened, hydrogen is not released to containment atmosphere. After DV is opened and hydrogen is released to the containment, DV is not necessary to work anymore. DV is only operated under severe accident conditions, in which core has already been significantly damaged. Under such situation, closing operation may not be significant and can be negligible.

Considering above insight, DV is not subject to hydrogen burning condition.

(4) Containment pressure (wide range)

The highest temperature where the containment pressure (wide range) exists is evaluated slightly below 800°F and the temperature rise from 400°F and reduced back to 400°F due to hydrogen burn takes approximately 2 minutes. The highest pressure evaluated from this study is approximately 50 psig, which is lower than the containment design pressure of 68 psig. The amount of hydrogen burnt in this analysis is conservatively assumed to be 100% active fuel length cladding reaction, hence this analysis widely covers various uncertainties involved in the hydrogen generation and burn.

Considering the above findings, the environmental condition required for the containment pressure (wide range) is determined that it must maintain its functions for longer than 2minutes under 400°F atmosphere, with considering the instantaneous temperature rise due to hydrogen burn with its peak temperature to be as high as 800°F.

These specific environmental conditions obtained from the equipment survivability study are addressed for the type test or analyses of these systems and components. It will be confirmed through the type test or analyses that the systems and components in the

US-APWR design are able to maintain safe shutdown and containment structural integrity with high confidence and to keep their functions under the postulated severe accident environmental conditions created by hydrogen burning. These system design specifications will be appropriately carried forward in procurement documents.

~~Referring to e~~Existing experiments and the literatures (References 19.2-11, 19.2-12, and 19.2-13) are also appropriately referred to evaluate the US-APWR equipment survivability. ~~, it is confirmed through these studies that the systems and components in the US-APWR design are able to maintain safe shutdown and containment structural integrity with high confidence and to keep their functions under the postulated severe accident environmental conditions created by hydrogen burning.~~

19.2.3.3.8 Long-term Containment Overpressure

The US-APWR containment is cooled and depressurized primarily by the CSS during a postulated severe accident. The CSS which supplies coolant water from the RWSP is automatically activated upon detecting high-high containment pressure. Accordingly, the containment pressure is limited to less than the design pressure during a severe accident. In case the CSS is not functional, the US-APWR provides diverse mitigation features against challenges by containment overpressure. One is the alternate containment cooling by containment fan cooler system. This is a system to depressurize containment by promoting natural circulation in containment. The containment fan cooler system is a system provided to stabilize the containment environmental condition during normal operation through forced air circulation by fan. However, the electrical power of fan may not be available during a severe accident. Natural circulation is instead credited to adequately mix the containment atmosphere. The containment fan cooler system employs non-essential chilled water as the coolant under normal operation. Since this non-essential chilled water cannot be available under severe accident conditions, the system line-up is switched from the chilled water system to the CCW system which supplies CCW to the containment fan cooler units as coolant. Although CCW is not as cold as chilled water, it is sufficiently colder than the containment atmosphere under severe accident conditions. This temperature difference between the containment fan cooler units and containment atmosphere causes condensation of surrounding steam. This condensation mechanism promotes more natural circulation flow because of the pressure difference due to condensation of steam. This enhances continuous containment depressurization.

The firewater system is also utilized to promote condensation of steam. The firewater system is lined up to the containment spray header when the CSS is not functional, and provides water droplet from top of containment. This temporarily depressurizes containment. However, the firewater system does not contain a heat exchanger, and thus has no ability to remove heat from containment to terminate the containment pressurization. Instead, this design feature can be expected to temporarily increase the heat sink in containment and extend the critical time of containment failure.

Goals of analysis

For long-term containment overpressure, no specific requirements are stated in the CFRs. The goals of the analysis for long-term containment overpressure are therefore

Table 19.2-1 Design Features for the US-APWR and Severe Accident Phenomena (Sheet 2 of 2)

Design Feature in US APWR	Severe Accident Phenomena							
	(1)	(2)	(3)	(4)	(5)	(6)	(7)	(8)
	Hydrogen Generation and Control	**Core Debris Coolability**	**Steam Explosion (in- and ex-vessel)** (Note 1, Note 2)	**High Pressure Melt Ejection**	**Temperature Induced SGTR**	**MCCI**	**Long-term Containment Overpressure** (Note 3)	**Equipment survivability** (Note 4)
Reactor cavity floor concrete	-	-	-	-	-	X	-	-
Reactor cavity depth	-	X	-	-	-	-	-	-
Firewater injection to reactor cavity	-	X	-	X	-	X	-	-

Note 1. In-vessel explosion in US-APWR is determined to be very unlikely and thus does not warrant explicit mitigation features.
Note 2. Containment structure has sufficient capability to withstand the load of an ex-vessel steam explosion and induced events by the load.
Note 3. A fourth mitigation feature is the CSS. The CSS's primary function is to mitigate containment overpressure.
Note 4. ~~Will identify~~ This study identifies systems and components, and time frames and environmental conditions created by burning of hydrogen, which are significant to establish and maintain safe shutdown and containment structural integrity. ~~to be examined during design certification stage. Will examine equipment survivability during design certification stage based on existing studies.~~

19.3 Open, Confirmatory, and COL Action Items Identified as Unresolved

The following subsections identify the open, confirmatory and COL action items associated with this Chapter.

19.3.1 Resolution of Open Items

There are no open items associated with this Chapter.

19.3.2 Resolution of Confirmatory Items

There are no confirmatory items associated with this Chapter.

19.3.3 Resolution of COL Action Items

The following are the COL action items associated with this Chapter:

COL 19.3(1) The COL Applicant who intends to implement risk-managed technical specifications continues to update Probabilistic Risk Assessment and Severe Accident Evaluation to provide PRA input for risk-managed technical specifications. Peer reviews for the updated PRA will be performed prior to the use of PRA to risk-informed applications.

COL 19.3(2) Deleted

COL 19.3(3) Deleted

COL 19.3(4) The Probabilistic Risk Assessment and Severe Accident Evaluation is updated as necessary to assess specific site information and associated site-specific external events (high winds and tornadoes, external floods, transportation, and nearby facility accidents).

COL 19.3(5) Deleted

COL 19.3(6) The COL applicant develops an accident management program which includes severe accident management procedures that capture important operator actions. Training requirements are also included as part of the accident management program.

Security-Related Information – Withheld Under 10 CFR 2.390

19A.5 Conclusions of Assessment

This assessment concludes that key design features and functional capabilities of the US-APWR ensure adequate protection of public health and safety in the event of an impact of a large commercial aircraft, as defined by the NRC. The postulated aircraft impacts would not impair the US-APWR's core cooling capability, containment integrity, spent fuel pit integrity, or adequate spent fuel cooling. The assessment resulted in identification of key design features and functional capabilities described in Section 19A.4, changes to which are required to be controlled in accordance with 10 CFR 50.150(c).

19A.6 References

1. Letter from D. Matthews, NRC to Dr C. K. Paulson, Mitsubishi Nuclear Energy Systems, Inc, Subject: "Approval of Mitsubishi Nuclear Energy Systems Safeguards Protection Program and Reviewing Official, and Transmittal of Beyond Design Basis, Large Commercial Aircraft Characteristics Specified by Commission," December 7, 2007.
2. NEI 07-13, "Methodology for Performing Aircraft Impact Assessments for New Plant Designs," Revision 7, May 2009.

~~3.UAP-SGI-09001, " US-APWR Design Certification Aircraft Impact Assessment," April 2009, Mitsubishi Heavy Industries, LTD.~~

Tier 1

Page	Location (e.g., subsection with paragraph/sentence/ item, table with column/row, or figure)	Description of Change
2.1-2	Table 2.1-1 Sheet 1 4th Row 1st Column	Change: "Extreme winter precipitation roof load(12) (100-year snowpack maximum snow weight including contributing portion of either extreme frozen winter precipitation event or extreme liquid winter precipitation event)" to "Extreme winter precipitation roof load(12)" RAI 547-4426 Question 02.03.01-17
2.1-2	Table 2.1-1 Sheet 1 5th Row 1st Column	Change: "48-hr probable maximum winter precipitation(13) (PMWP)" to "48-hr probable maximum winter precipitation (PMWP)" RAI 547-4426 Question 02.03.01-18
2.1-2	Table 2.1-1 Sheet 1 12th Row	Delete row for "Ambient design air temperature (5% annual exceedance maximum)" RAI 547-4426 Question 02.03.01-18
2.1-2	Table 2.1-1 Sheet 1 15th Row	Delete row for "Ambient design air temperature (5% annual exceedance minimum)" RAI 547-4426 Question 02.03.01-18
2.1-4	Table 2.1-1 (Sheet 3 of 7)	Changed 96-720 hr χ/Q value to 1.5 times of the present 96-720 χ /Q value. RAI 562, 02.03.04-9
2.1-5	Table 2.1-1 (Sheet 4 of 7)	Changed to correct the expression of ground-level containment releases for MCR inleakage. Changed 96-720 hr χ/Q value to 1.5 times of the present 96-720 χ /Q value. RAI 562, 02.03.04-6 RAI 562, 02.03.04-9
2.1-6	Table 2.1-1 (Sheet 5 of 7)	Changed 96-720 hr χ/Q value to 1.5 times of the present 96-720 χ /Q value. RAI 562, 02.03.04-9
2.1-7	Table 2.1-1 (Sheet 6 of 7)	Changed 96-720 hr χ/Q value to 1.5 times of the present 96-720 χ /Q value. RAI 562, 02.03.04-9
2.1-9	Table 2.0-1 Sheet 8 Note 13	Change: "The 48-hour PMWP is based on interpolation of 24-hour PMP and 72-hour PMP data for the month of March in HMR-53 (Reference: Hydrometeorological Report No. 53, Seasonal Variation of 10-Square-Mile Probable Maximum Precipitation Estimates, United States

Page	Location (e.g., subsection with paragraph/sentence/ item, table with column/row, or figure)	Description of Change
		East of the 105th Meridian, Figures 27 and 37)" to "Deleted." Reason: Clarified information on PMWP by deleting footnote and moving information to Section 2.3. [RAI 547-4426 Question 02.03.01-18]
2.7-1	2.7.1.1.1, 2nd paragraph	Replaced "possibility" with "probability" in the first sentence. Changed to "to less than 1.0E-5 per year by means of a program of periodic testing and inspection" in the first sentence. Deleted former 2nd sentence. Replaced "For the purpose to keep the probability equal or less than the above" with "In particular" in the 2nd sentence. RAI 323, 03.05.01.03-3
2.7-94	Table 2.7.2-2	Added Tag. No. IAS-PT-010 in the Equipment Name column. RAI 550, 14.03.11-43
2.7-122, 123	Table 2.7.3.3-4	Added Tag. No. in the Equipment/Instrument Name column. RAI 550, 14.03.11-43
2.7-130	Figure 2.7.3.3-1	Added the label for B-CCW pump on the figure. RAI 550, 14.03.11-43
2.7-156	2.7.4.1.1, System Purpose and Functions	Added the following text to the end of the last sentence. The LWMS is designed to process liquid prior to release and ensure compliance with 10 CFR 20, Appendix B, Table 2, effluent concentration and dose limits, and 10 CFR 50, Appendix I dose objectives for liquid effluents when the plant is operational. RAI 523, 11.02-32

Page	Location (e.g., subsection with paragraph/sentence/ item, table with column/row, or figure)	Description of Change
2.7-156, 157	2.7.4.1.1, Key Design Features	Added the following text to the end of the first sentence in 3rd paragraph. "The process equipments are designed to remove ionic species and impurities to meet requirements in NRC Regulations 10 CFR Part 20, Appendix B and 10 CFR Part 50, Appendix I, to ensure that the effluent releases do not exceed regulatory limits." Changed to read "Tanks, equipment, pumps, ion exchange columns, filters etc" in 1st sentence of 4th paragraph. Deleted the following text from the 2nd sentence of 4th paragraph. "where it is sampled prior to recycle or discharge" Added the following text before the last sentence in 4th paragraph. "The LWMS shall have sampling provision to confirm the treated effluent meet 10 CFR Part 20, Appendix B, Table 2 before discharge. The LWMS shall also have recycle capability in order to reprocess liquid in the event that it does not meet the Appendix B requirements." RAI 523, 11.02-32
2.7-157	2.7.4.1.1, Alarms, Displays, and Controls	Added "and initiates an alarm for operator actions" to the end of the last sentence under Alarms, Displays, and Controls. RAI 523, 11.02-32
2.7-160	Table 2.7.4.1-1, ITAAC #6	Added new ITAAC to inspect the LWMS capability. RAI 523, 11.02-32
2.7-161	2.7.4.2.1, System Purpose and Functions	Added the following text to the end of the paragraph: The GWMS is designed to process potentially radioactive gases using charcoal adsorbers to provide sufficient delay and decay time of radioactive gases prior to release. This insures compliance with 10 CFR Part 20, Appendix B, concentration and dose limits, and 10 CFR Part 50, Appendix I dose objectives for gaseous effluents when the plant is operational. RAI 533, 11.03-15

Page	Location (e.g., subsection with paragraph/sentence/ item, table with column/row, or figure)	Description of Change
2.7-161	2.7.4.2.1, Key Design Features	Added the following text to the end of the fourth sentence. The design shall incorporate sufficient delay time and proper types, quantities, sizes, and the quality of the media to meet requirements in NRC Regulations 10 CFR Part 20, Appendix B and 10 CFR Part 50, Appendix I, to ensure that the effluent releases do not exceed regulatory limits. Review of vendors' equipment design and equipment acceptance inspections are performed to insure equipment sizes, media type and loading procedures are consistent with the design and technical specifications. Pre-operational inspections and testing shall include verification of the media types and quantities to insure that the media will meet or exceed the process design parameters as specified. RAI 533, 11.03-15
2.7-164	Table 2.7.4.2-1, ITAAC #5	Added new ITAAC for the inspection for the charcoal media. RAI 533, 11.03-15
2.7-213	2.7.5.3.1.1, Key Design Features	Added the following text as the last bullet. The containment purge system has fire dampers to limit the spread of fire and combustion products. The fire dampers are capable of closing against full airflow. RAI 558, 06.05.01-15
2.7-218	Table 2.7.5.3-1 ITAAC #3	Added new ITAAC for the inspection of the fire dampers. RAI 558, 06.05.01-15
2.9-2	2.9.1.2.2	Added the objective for the functional requirements analysis to the end of the first sentence in the first paragraph. RAI 560, 14.03.09-8
2.9-2	2.9.1.2.2	Separate second paragraph to two sentences for clarification as follows: The functional requirements analysis and function allocation was performed for the Japanese APWR design. The analysis and allocation were reconfirmed and additional analysis was performed to account for the differences in the US-APWR design. RAI 560, 14.03.09-8

Page	Location (e.g., subsection with paragraph/sentence/ item, table with column/row, or figure)	Description of Change
2.11-6	Table 2.11.1-2	Added new ITAAC for the verification of the PCCV liner materials and welds as ITAAC #1.b and #1.c. Renumbered to align the ITAAC addition to 1.a. RAI 544, 06.01.01-19

Table 2.1-1 Key Site Parameters
(Sheet 1 of 7)

Meteorology	
Parameter Description	**Parameter Value**
Normal winter precipitation roof load[11]	50 lb/ft^2
Extreme winter precipitation roof load[12] ~~(100-year snowpack maximum snow weight including contributing portion of either extreme frozen winter precipitation event or extreme liquid winter precipitation event)~~	75 lb/ft^2
48-hr probable maximum winter precipitation~~[13]~~ (PMWP)	36 in.
Tornado maximum wind speed	230 mph
	184 mph maximum rotational
	46 mph maximum translational
Radius of maximum rotational speed	150 ft
Tornado maximum pressure drop	1.2 psi
Rate of pressure drop	0.5 psi/s
Tornado-generated missile spectrum and associated velocities	15 ft long schedule 40 steel pipe moving horizontally at 135 ft/s[1]
	4,000 lb automobile moving horizontally at 135 ft/s[1]
	1 in diameter steel sphere moving horizontally at 26 ft/s[1]
Extreme wind speed (other than in tornado)	155 mph for 3-second gusts at 33 ft above ground level based on 100-year return period, with importance factor of 1.15 for seismic category I/II structures
~~Ambient design air temperature (5% exceedance maximum)~~ ~~Secondary HVAC~~	~~95°F dry bulb, 77°F coincident wet bulb, 79°F non-coincident wet bulb~~
~~Normal Plant Heat Sink~~	~~92°F dry bulb, 75°F coincident wet bulb, 76°F non-coincident wet bulb~~
Ambient design air temperature (1% annual exceedance maximum)	100°F dry bulb, 77°F coincident wet bulb, 81°F non-coincident wet bulb
Ambient design air temperature (0% annual exceedance maximum)	115°F dry bulb, 80°F coincident wet bulb, 86°F non-coincident wet bulb, historical limit excluding peaks <2 hr
~~Ambient design air temperature (5% exceedance minimum)~~	~~-5°F dry bulb~~
Ambient design air temperature (1% annual exceedance minimum)	-10°F dry bulb
Ambient design air temperature (0% annual exceedance minimum)	-40°F dry bulb, historical limit excluding peaks <2 hr

Table 2.1-1 Key Site Parameters
(Sheet 3 of 7)

Atmospheric dispersion factors (χ/Q values) for main control room (MCR) heating, ventilation, and air conditioning (HVAC) intake for specified release points[2]*:*	
Plant vent [5]	
0-8 hrs	1.1×10^{-3} s/m^3
8-24 hrs	6.6×10^{-4} s/m^3
1-4 days	4.2×10^{-4} s/m^3
4-30 days	2.8~~1.9~~$\times10^{-4}$ s/m^3
Ground-level containment releases[4]	
0-8 hrs	2.2×10^{-3} s/m^3
8-24 hrs	1.3×10^{-3} s/m^3
1-4 days	8.3×10^{-4} s/m^3
4-30 days	5.5~~3.6~~$\times10^{-4}$ s/m^3
Main steam relief valve and safety valve releases[6]	
0-8 hrs	5.3×10^{-3} s/m^3
8-24 hrs	3.1×10^{-3} s/m^3
1-4 days	2.0×10^{-3} s/m^3
4-30 days	~~8.7×10^{-4}~~ 1.3×10^{-3} s/m^3
Steam line break releases [8]	
0-8 hrs	1.9×10^{-2} s/m^3
8-24 hrs	1.1×10^{-2} s/m^3
1-4 days	7.1×10^{-3} s/m^3
4-30 days	4.7~~3.1~~$\times10^{-3}$ s/m^3
Fuel handling area releases [7]	
0-8 hrs	1.1×10^{-3} s/m^3
8-24 hrs	6.4×10^{-4} s/m^3
1-4 days	4.1×10^{-4} s/m^3
4-30 days	2.7~~1.8~~$\times10^{-4}$ s/m^3

Table 2.1-1 Key Site Parameters
(Sheet 4 of 7)

Atmospheric dispersion factors (χ/Q values) for MCR inleak for specified release points[3]*:*	
Plant vent [9]	
0-8 hrs	1.3×10^{-3} s/m^3
8-24 hrs	7.8×10^{-4} s/m^3
1-4 days	4.9×10^{-4} s/m^3
4-30 days	3.3~~2.2~~$\times10^{-4}$ s/m^3
Plant vent [10]	
0-8 hrs	1.4×10^{-3} s/m^3
8-24 hrs	8.0×10^{-4} s/m^3
1-4 days	5.1×10^{-4} s/m^3
4-30 days	3.3~~2.2~~$\times10^{-4}$ s/m^3
Ground-level containment releases ~~to Class 1E electrical room HVAC intake~~ [4]	
0-8 hrs	2.4×10^{-3} s/m^3
8-24 hrs	1.4×10^{-3} s/m^3
1-4 days	9.1×10^{-4} s/m^3
4-30 days	6.0~~4.0~~$\times10^{-4}$ s/m^3
Main steam relief valve and safety valve releases [6]	
0-8 hrs	5.3×10^{-3} s/m^3
8-24 hrs	3.1×10^{-3} s/m^3
1-4 days	2.0×10^{-3} s/m^3
4-30 days	~~8.7×10^{-4}~~ 1.3×10^{-3} s/m^3
Steam line break releases [8]	
0-8 hrs	1.9×10^{-2} s/m^3
8-24 hrs	1.1×10^{-2} s/m^3
1-4 days	7.1×10^{-3} s/m^3
4-30 days	4.7~~3.1~~$\times10^{-3}$ s/m^3
Fuel handling area releases [7]	
0-8 hrs	1.1×10^{-3} s/m^3
8-24 hrs	6.7×10^{-4} s/m^3
1-4 days	4.3×10^{-4} s/m^3
4-30 days	2.8~~1.9~~$\times10^{-4}$ s/m^3

Table 2.1-1 Key Site Parameters
(Sheet 5 of 7)

Atmospheric dispersion factors (χ/Q values) for Technical Support Center (TSC) HVAC intake for specified release points[2]:	
Plant vent [5]	
0-8 hrs	1.4×10^{-3} s/m^3
8-24 hrs	8.0×10^{-4} s/m^3
1-4 days	5.1×10^{-4} s/m^3
4-30 days	3.3~~2.2~~$\times10^{-4}$ s/m^3
Ground-level containment releases[4]	
0-8 hrs	1.9×10^{-3} s/m^3
8-24 hrs	1.1×10^{-3} s/m^3
1-4 days	7.2×10^{-4} s/m^3
4-30 days	4.8~~3.2~~$\times10^{-4}$ s/m^3
Main steam relief valve and safety valve releases[6]	
0-8 hrs	1.7×10^{-3} s/m^3
8-24 hrs	9.9×10^{-4} s/m^3
1-4 days	6.3×10^{-4} s/m^3
4-30 days	4.2~~2.8~~$\times10^{-4}$ s/m^3
Steam line break releases [8]	
0-8 hrs	1.4×10^{-3} s/m^3
8-24 hrs	8.4×10^{-4} s/m^3
1-4 days	5.3×10^{-4} s/m^3
4-30 days	3.5~~2.3~~$\times10^{-4}$ s/m^3
Fuel handling area releases [7]	
0-8 hrs	6.7×10^{-4} s/m^3
8-24 hrs	3.9×10^{-4} s/m^3
1-4 days	2.5×10^{-4} s/m^3
4-30 days	1.7~~1.1~~$\times10^{-4}$ s/m^3

Table 2.1-1 Key Site Parameters
(Sheet 6 of 7)

Atmospheric dispersion factors (χ/Q values) for TSC inleakage for specified release points[3]:	
Plant vent [5]	
0-8 hrs	1.4×10^{-3} s/m^3
8-24 hrs	8.0×10^{-4} s/m^3
1-4 days	5.1×10^{-4} s/m^3
4-30 days	3.3~~2.2~~$\times10^{-4}$ s/m^3
Ground-level containment releases [4]	
0-8 hrs	1.9×10^{-3} s/m^3
8-24 hrs	1.1×10^{-3} s/m^3
1-4 days	7.2×10^{-4} s/m^3
4-30 days	4.8~~3.2~~$\times10^{-4}$ s/m^3
Main steam relief valve and safety valve releases [6]	
0-8 hrs	1.7×10^{-3} s/m^3
8-24 hrs	9.9×10^{-4} s/m^3
1-4 days	6.3×10^{-4} s/m^3
4-30 days	4.2~~2.8~~$\times10^{-4}$ s/m^3
Steam line break releases [8]	
0-8 hrs	1.4×10^{-3} s/m^3
8-24 hrs	8.4×10^{-4} s/m^3
1-4 days	5.3×10^{-4} s/m^3
4-30 days	3.5~~2.3~~$\times10^{-4}$ s/m^3
Fuel handling area releases [7]	
0-8 hrs	6.7×10^{-4} s/m^3
8-24 hrs	3.9×10^{-4} s/m^3
1-4 days	2.5×10^{-4} s/m^3
4-30 days	1.7~~1.1~~$\times10^{-4}$ s/m^3

NOTES:

1. The specified missiles are assumed to have a vertical speed component equal to 2/3 of the horizontal speed.
2. These dispersion factors are chosen as the maximum values at all intake points.
3. These dispersion factors are chosen as the maximum values at all inleak points.
4. These dispersion factors are used for a loss-of-coolant accident (LOCA), a rod ejection accident.
5. These dispersion factors are used for a loss-of-coolant accident (LOCA), a rod ejection accident, a failure of small lines carrying primary coolant outside containment and a fuel-handling accident inside the containment.
6. These dispersion factors are used for a steam generator (SG) tube rupture, a steam system piping failure, a reactor coolant pump (RCP) rotor seizure, and a rod ejection accident.
7. These dispersion factors are used for a fuel handling accident occurring in the fuel handling and storage area.
8. These dispersion factors are used for a steam system piping failure.
9. These dispersion factors are used for a LOCA
10. These dispersion factors are used for a rod ejection accident, a failure of small lines carrying primary coolant outside containment and a fuel-handling accident inside the containment.
11. Normal winter precipitation roof load is determined by converting ground snow load p_g based on the highest ground-level weight of:
    - the 100-year return period snowpack,
    - the historical maximum snowpack,
    - the 100-year return period snowfall event, or
    - the historical maximum snowfall event in the site region.
12. The extreme winter precipitation roof load is based on the sum of the normal ground level winter precipitation plus the highest weight at ground level resulting from either the extreme frozen winter precipitation event or the extreme liquid winter precipitation event. The extreme frozen winter precipitation event is assumed to accumulate on the roof on top of the antecedent normal winter precipitation event. The extreme liquid winter precipitation event may not accumulate on the roof, depending on the geometry of the roof and the type of drainage provided. The extreme winter precipitation roof load is included as live load in extreme loading combinations using the applicable load factor indicated.
13. Deleted.~~The 48-hour PMWP is based on interpolation of 24-hour PMP and 72-hour PMP data for the month of March~~
14. Acceptable parameters for settlement without further evaluation.

2.7 PLANT SYSTEMS

2.7.1 Power Generation Systems

2.7.1.1 Turbine Generator (T/G)

2.7.1.1.1 Design Description

System Purpose and Functions

The T/G is non safety-related system. The T/G provides capability to convert energy in the main steam to electrical energy at the generator output.

Location and Functional Arrangement

The T/G is located within the T/B, and consists of:

- One double-flow high-pressure turbine
- Three double-flow low pressure turbines
- A generator / exciter
- Two sets of external moisture separator/reheaters
- Associated piping, valves, control system
- Auxiliary subsystems

Key Design Features

The turbine is an 1800 rpm, tandem compound, six exhaust flow, reheat unit. Two external moisture separator/reheaters (MS/R) with two stages of reheating are located on each side of the T/G centerline. The generator is a direct-driven, three-phase, 60 Hz, four-pole synchronous generator with water-cooled stator and hydrogen-cooled rotor.

The turbine rotors, valves and control/protection system are designed to minimize the probability~~possibility~~ of turbine missile generation to less than 1.0E-5 per year by means of a program of periodic testing and inspection. ~~Orientation of the T/G is such that a high-energy missile to be directed at an approximately 90 degree angle away from safety-related structures, systems, and components. On the top of this, any safety-related systems, structures and components are located outside the low-trajectory missile strike zones, which are defined by ±25-degree lines emanating from the centers of the first and last low-pressure turbines wheels as measured from the plane of the wheels. For the purpose to keep the probability equal or less than the above~~In particular, turbine rotor integrity is provided by the integrated combination of rotor design, fracture toughness requirements, tests, and inspections.

Table 2.7.2-1 Compressed Air and Gas System Component Location

Component Name	Component Location
A-Instrument Air Compressor Package	Turbine Building
B- Instrument Air Compressor Package	Turbine Building
A-Service Air Compressor Package	Turbine Building
B-Service Air Compressor Package	Turbine Building
C-Service Air Compressor Package	Turbine Building

Tale 2.7.2-2 Compressed Air and Gas System Equipment Alarms, Displays and Control Functions

Equipment Name	MCR/RSC Alarm	MCR Display	MCR/RSC Control Function	RSC Display
Instrument air pressure (IAS-PT-010)	Yes	Yes	No	Yes

Table 2.7.2-3 Compressed Air and Gas System Inspections, Tests, Analyses, and Acceptance Criteria

Design Commitment	Inspections, Tests Analyses	Acceptance Criteria
1. The functional arrangement of the CAGS is as described in the design description.	1. An inspection of the as-built system will be performed.	1. The as-built CAGS conforms to the functional arrangement as described in the Design Description of this Subsection 2.7.2.1.
2. Deleted.	2. Deleted.	2. Deleted.
3. MCR alarms and displays of the parameters identified in Table 2.7.2-1 can be retrieved in the MCR.	3. Inspection will be performed for the retrievability of the CAGS parameters in the MCR.	3. The MCR alarms and displays identified in Table 2.7.2-1 can be retrieved in the as-built MCR.
4. RSC alarm and display are identified in Table 2.7.2-1.	4. Inspections of the as-built RSC alarm and display will be performed.	4. Alarm and display exist on the as-built RSC as identified in Table 2.7.2-1.

Table 2.7.3.3-4 Component Cooling Water System Equipment Alarms, Displays, and Control Functions (Sheet 1 of 2)

Equipment/Instrument Name	MCR/RSC Alarm	MCR Display	MCR/RSC Control Function	RSC Display
Component cooling water pumps (NCS-MPP-001 A, B, C, D)	No	Yes	Yes	Yes
CCW supply header tie line isolation valves (NCS-MOV-020A,B)	No	Yes	Yes	Yes
CCW return header tie line isolation valves (NCS-MOV-007A,B)	No	Yes	Yes	Yes
CS/RHR heat exchanger CCW outlet valves (NCS-MOV-145A,B,C,D)	No	Yes	Yes	Yes
RCP CCW supply line outside containment isolation valves (NCS-MOV-402A,B)	No	Yes	Yes	Yes
RCP CCW supply line outside containment isolation valve bypass valves (NCS-MOV-445A,B)	No	Yes	Yes	Yes
RCP CCW return line inside containment isolation valves(NCS-MOV-436A,B)	No	Yes	Yes	Yes
RCP CCW return line inside containment isolation valve bypass valves (NCS-MOV-447A,B)	No	Yes	Yes	Yes
RCP CCW return line outside containment isolation valves (NCS-MOV-438A,B)	No	Yes	Yes	Yes
RCP CCW return line outside containment isolation valve bypass valves (NCS-MOV-448A,B)	No	Yes	Yes	Yes
RCP motor CCW supply line isolation valves (NCS-MOV-446A,B,C,D)	No	Yes	Yes	Yes
RCP CCW supply line tie line isolation valves (NCS-MOV-232A,B)	No	Yes	Yes	Yes
RCP CCW return line tie line isolation valves (NCS-MOV-233A,B)	No	Yes	Yes	Yes
RCP CCW return line isolation valve (NCS-MOV-234A,B)	No	Yes	Yes	Yes
RCP CCW supply line isolation valves (NCS-MOV-401A,B)	No	Yes	Yes	Yes
Letdown heat exchanger CCW supply line outside containment isolation valve (NCS-MOV-531)	No	Yes	Yes	Yes
Letdown heat exchanger CCW return line outside containment isolation valve (NCS-MOV-537)	No	Yes	Yes	Yes
Excess letdown heat exchanger CCW supply line outside containment isolation valve ((NCS-MOV-511)	No	Yes	Yes	Yes
Excess letdown heat exchanger CCW return line outside containment isolation valve (NCS-MOV-517)	No	Yes	Yes	Yes

Table 2.7.3.3-4 Component Cooling Water System Equipment Alarms, Displays, and Control Functions (Sheet 2 of 2)

Equipment/Instrument Name	MCR/RSC Alarm	MCR Display	MCR/RSC Control Function	RSC Display
Auxiliary building CCW supply line first isolation valve (NCS-AOV-601)	No	Yes	Yes	Yes
Auxiliary building CCW supply line second isolation valve (NCS-AOV-602)	No	Yes	Yes	Yes
Turbine building CCW supply line first isolation valves (NCS-AOV-661A,B)	No	Yes	Yes	Yes
Turbine building CCW supply line second isolation valves (NCS-AOV-662A,B)	No	Yes	Yes	Yes
RCP thermal barrier heat exchanger CCW return line first isolation valves (NCS-MOV-129A,130A,131A,132A)	No	Yes	Yes	Yes
RCP thermal barrier heat exchanger CCW return line second isolation valves (NCS-MOV-129B,130B,131B,132B)	No	Yes	Yes	Yes
CCW header flow (NCS-FT-034,035,037,038)	No	Yes	No	Yes
CCW supply temperature (NCS-TE-025,026,027,028)	Yes	Yes	No	Yes
CCW header pressure (NCS-PT-030,031,032,033)	Yes	Yes	No	Yes
CCW surge tank water level (NCS-LT-010,011,020,021)	Yes	Yes	No	Yes
RCP thermal barrier component cooling water flow (NCS-FT-129A,B, 130A,B, 131A,B, 132A,B)	Yes	Yes	No	Yes

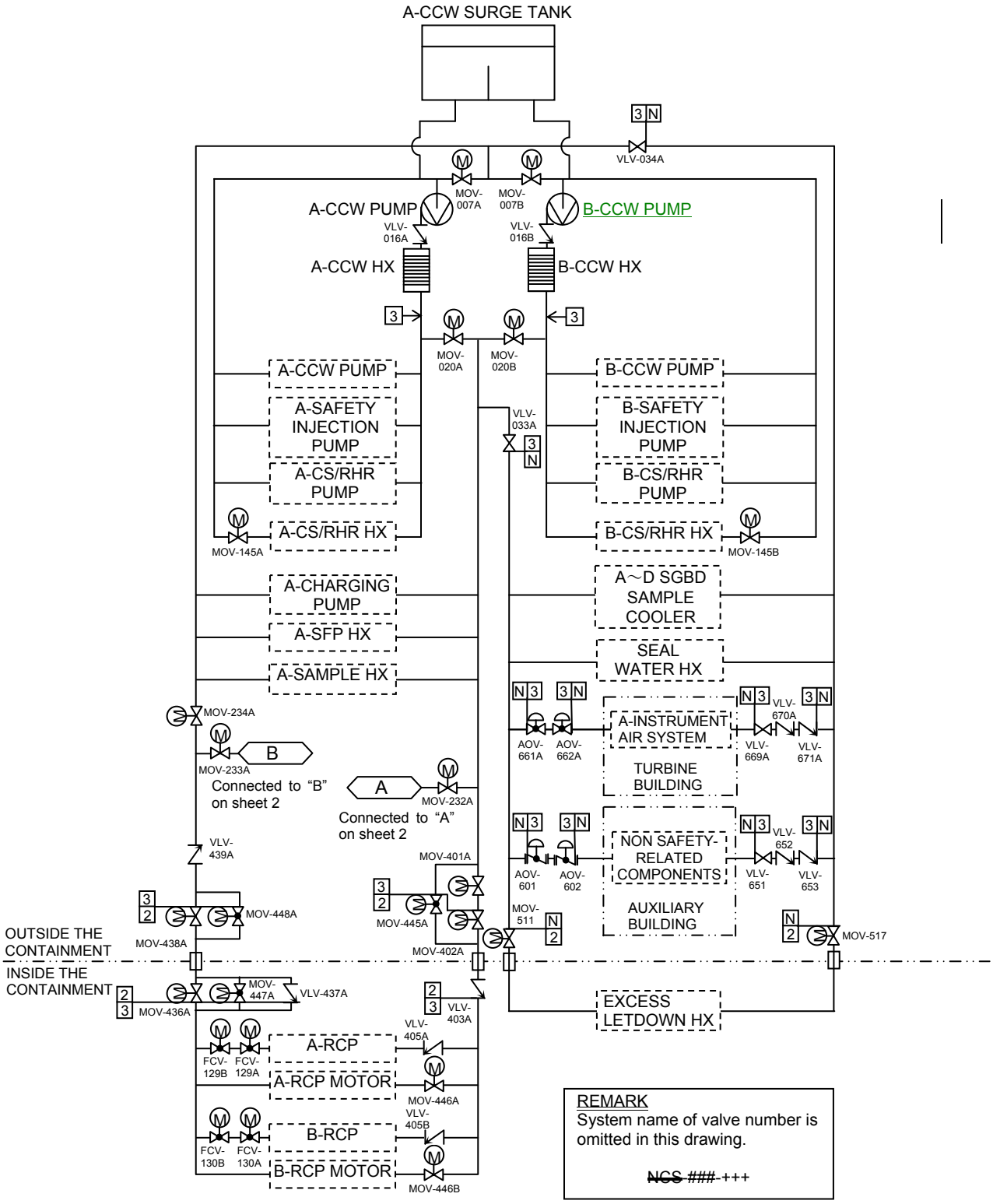

Figure 2.7.3.3-1 Component Cooling Water System (Sheet 1 of 2)

2.7.4 Radwaste Systems

2.7.4.1 Liquid Waste Management System (LWMS)

2.7.4.1.1 Design Description

System Purpose and Functions

The LWMS is non safety-related system. The reactor coolant drain tank and the containment vessel sump include a safety-related containment isolation function as described in Section 2.11.2. The LWMS is designed to safely monitor, control, collect, process, handle, store, and dispose of liquid radioactive waste generated as a result of normal operation, including anticipated operational occurrences (AOOs). The LWMS is designed to process liquid prior to release and ensure compliance with 10 CFR 20, Appendix B, Table 2, effluent concentration and dose limits, and 10 CFR 50, Appendix I dose objectives for liquid effluents when the plant is operational.

Location and Functional Arrangement

The LWMS is located in the containment, the A/B, and the R/B.

Key Design Features

The LWMS has different subsystems so that the liquid wastes from various sources can be segregated and processed separately in the most appropriate manner for the type of waste. These systems are interconnected in order to provide additional flexibility in processing the wastes and to provide redundancy.

The LWMS includes the following:

- The equipment and floor drain processing subsystem
- The detergent drain subsystem
- The chemical drain subsystem
- The reactor coolant drain subsystem

The LWMS provides the capability to segregate, collect and treat the liquid waste to acceptable release or recycle specifications for plant use. The process equipment is designed to remove ionic species and impurities to meet requirements in NRC Regulations 10 CFR Part 20, Appendix B and 10 CFR Part 50, Appendix I, to ensure that the effluent releases do not exceed regulatory limits. The LWMS also provides the capability to store, sample, and analyze treated liquid for safe control and disposal.

Tanks, equipment, pumps, ion exchange columns, filters etc., used for storing and processing radioactive material are located in controlled areas and shielded in accordance with their design basis source term inventories. After the waste has been processed, it is temporarily stored in monitor tanks ~~where it is sampled prior to recycle or~~

~~discharge~~. The LWMS shall have sampling provision to confirm the treated effluent meet 10 CFR Part 20, Appendix B, Table 2 before discharge. The LWMS shall also have recycle capability in order to reprocess liquid in the event that it does not meet the Appendix B requirements. Connections are provided to forward liquid waste to contracted mobile systems or temporary equipment.

LWMS is designed in compliance with the as low as reasonable achievable (ALARA) principle.

The LWMS is designed to provide containment isolation of the LWMS lines penetrating containment.

Seismic and ASME Code Classifications

The seismic and ASME code classifications of the containment isolation components of the reactor coolant drain tank and the containment vessel sump are described in Table 2.11.2-1. The portions of the auxiliary building (A/B) that house the principal LWMS equipment are designed to seismic Category II. The LWMS is a non-safety system and the components are non-seismic.

System Operation

The LWMS is designed to process liquid waste generated from normal operation. Treated effluent is normally recycled for plant use. In the event that there is excess water, or that the treated effluent does not meet recycled water quality specifications, the water is discharged after sampling and analysis. The discharge valve is under supervisory control and requires approval to open for discharge.

Alarms, Displays, and Controls

A radiation monitor and dual isolation valves are installed on the sole discharge line to monitor and control effluents to the environment. Detection of radioactivity levels in the stream exceeding the predetermined setpoint automatically closes the discharge valves and initiates an alarm for operator actions.

Logic

The containment isolation logic for the reactor coolant drain tank and the containment vessel sump is consistent with Subsection 2.11.2.

Interlocks

There are no interlocks needed for direct safety functions related to the LWMS.

Class 1E Electrical Power Sources and Divisions

Not applicable.

Equipment to be Qualified for Harsh Environments

Table 2.7.4.1-1 Liquid Waste Management System Inspections, Tests, Analyses, and Acceptance Criteria

Design Commitment	Inspections, Tests, Analyses	Acceptance Criteria
1. The functional arrangement of the LWMS is as described in Design Description of this Subsection 2.7.4.1.	1. Inspections of the as-built system will be performed.	1. The as-built LWMS conforms with the functional arrangement as described in the Design Description of this Subsection 2.7.4.1.
2. Upon the receipt of LWMS effluent discharge isolation signal, the LWMS effluent discharge valves close automatically.	2. Tests of the as-built LWMS effluent discharge valves will be performed using a simulated test signal.	2. Upon the receipt of a simulated test signal, the as-built LWMS effluent discharge valves close automatically.
3. The ASME components of the LWMS retain their pressure boundary integrity at their design pressure.	3. A pressure test will be performed on the as-built ASME components of the LWMS required to be hydrostatically examined by the ASME B31.3 as described by Regulatory Guide 1.143.	3. The results of the pressure test of the as-built ASME components of the LWMS conform with the requirements in the ASME B31.3, as described by Regulatory Guide 1.143.
4. Deleted.	4. Deleted.	4. Deleted.
5. The LWMS valves and piping are designed and constructed in accordance with ASME B31.3 requirements.	5.a Inspections will be conducted of the fabrication and installation of as-built components.	5.a Design documentation exists and concludes that the as-built valves and piping of the LWMS are fabricated, installed, and inspected in accordance with ASME B31.3 requirements.
	5.b Analysis will be conducted to reconcile the as-designed and as-built component information with the ASME design documentation.	5.b The analysis concludes that the as-built LWMS valves and piping are reconciled with the design documents.
6. The LWMS process equipments are designed to remove ionic species and impurities to meet 10 CFR Part 20 and 10 CFR Part 50, Appendix I, to ensure that the effluent releases do not exceed regulatory limits.	6. Inspections of the LWMS process equipment will be performed to verify the type and quality of filtration and demineralization media and volume of the ion exchange resin.	6. The as-built LWMS process equipments are capable of removing ionic species and impurities to meet 10 CFR Part 20 and 10 CFR Part 50, Appendix I, to ensure that the effluent releases do not exceed regulatory limits.

2.7.4.2 Gaseous Waste Management System (GWMS)

2.7.4.2.1 Design Description

System Purpose and Functions

The GWMS is a not safety-related system. The GWMS is designed to monitor, control, collect, process, handle, store, and dispose of gaseous radioactive waste generated as the result of normal operation, including anticipated operational occurrences (AOOs). The GWMS is designed to process potentially radioactive gases using charcoal adsorbers to provide sufficient delay and decay time of radioactive gases prior to release. This insures compliance with 10 CFR Part 20, Appendix B, concentration and dose limits, and 10 CFR Part 50, Appendix I dose objectives for gaseous effluents when the plant is operational.

Location and Functional Arrangement

The GWMS is located in the A/B. The GWMS uses the gas surge tanks to provide temporary storage of radioactive gas for the decay of the short-lived isotopes that contribute the majority of radioactivity. It also includes the charcoal beds for radioactive gases decay before the gases are released into the environment.

Key Design Features

The GWMS design provides sufficient capacity and flexibility to collect and process incoming radioactive waste gases for release. Streams in the GWMS are monitored for both hydrogen and oxygen content to prevent flammable mixture. The waste gas compressor packages are used to compress the nitrogen waste gas. The charcoal beds provide adequate delay and decay time before the gases are released into the environment. The design shall incorporate sufficient delay time and proper types, quantities, sizes, and the quality of the media to meet requirements in NRC Regulations 10 CFR Part 20, Appendix B and 10 CFR Part 50, Appendix I, to ensure that the effluent releases do not exceed regulatory limits. Review of vendors' equipment design and equipment acceptance inspections are performed to insure equipment sizes, media type and loading procedures are consistent with the design and technical specifications. Pre-operational inspections and testing shall include verification of the media types and quantities to insure that the media will meet or exceed the process design parameters as specified. The radiation level in the treated gases is verified with radiation monitors prior to release to the environment. These radiation monitors send signal to close the GWMS discharge valves upon detection of radiation levels above the set point.

Seismic and ASME Code Classifications

The portions of the A/B that house the principal GWMS equipment are designed to seismic Category II. The GWMS is a non-safety system and the components are non-seismic.

System Operation

Table 2.7.4.2-1 Gaseous Waste Management System Inspections, Tests, Analyses, and Acceptance Criteria

Design Commitment	Inspections, Tests, Analyses	Acceptance Criteria
1. The functional arrangement of the GWMS is as described in Design Description of this Subsection 2.7.4.2.	1. Inspections of the as-built system will be performed.	1. The as-built GWMS conforms with the functional arrangement as described in the Design Description of this Subsection 2.7.4.2.
2. Upon the receipt of GWMS effluent discharge isolation signal, the GWMS effluent discharge valves close automatically.	2. Tests of the as-built GWMS effluent discharge valves will be performed using a simulated test signal.	2. Upon the receipt of a simulated GWMS effluent discharge isolation test signal, the as-built GWMS effluent discharge valves close automatically.
3. The ASME Code components of the GWMS retain their pressure boundary integrity at their design pressure.	3. A pressure test will be performed on the as-built ASME code components of the GWMS required to be hydrostatically examined by applicable ASME code.	3. The results of the pressure test of the as-built ASME Code components of the GWMS conform with the requirements in the applicable ASME Code.
4. The GWMS valves and piping are designed and constructed in accordance with ASME B31.3 requirements.	4.a Inspections will be conducted of the fabrication and installation of as-built components.	4.a Design documentation exists and concludes that the as-built valves and piping of the GWMS are fabricated, installed, and inspected in accordance with ASME B31.3 requirements.
	4.b Analysis will be conducted to reconcile the as-designed and as-built component information with the ASME design documentation.	4.b The analysis concludes that the as-built GWMS valves and piping are reconciled with the design documents.
5. The GWMS design shall incorporate sufficient delay time and proper types, quantities, sizes, and the quality of the media to meet requirements in NRC Regulations 10 CFR Part 20, Appendix B and 10 CFR Part 50, Appendix I, to ensure that the effluent releases do not exceed regulatory limits.	5. Inspections of the GWMS process equipment will be performed to verify the type, volume, and quality of charcoal media.	5. The as-built charcoal adsorber contains the proper media type, size, volume, and quality of charcoal as specified

- The low volume purge exhaust airflow is made to pass through a HEPA filter and a charcoal absorber by an exhaust fan, prior to being discharged to the atmosphere through the vent stack.

- The high volume purge exhaust airflow is made to pass through a HEPA filter by an exhaust fan, prior to being discharged to the atmosphere through the vent stack.

- The containment purge system has fire dampers to limit the spread of fire and combustion products. The fire dampers are capable of closing against full airflow.

Seismic and ASME Code Classifications

The containment penetration piping and related isolation valves meet seismic Category I requirements. The containment penetration piping and the related isolation valves comply with requirements of the ASME Code Section III Class 2.

Almost all of the containment purge system components located inside of the containment meet seismic Category II, except for the containment isolation valves and penetration piping.

System Operation

The important aspects of system operation are specified under “Logic“.

Alarms, Displays, and Controls

With the exception of the containment isolation valves, there are no important alarms, displays, and controls.

Logic

The containment isolation valves in the containment purge system operate upon receipt of a containment isolation signal, as described in Subsection 2.11.2.

Interlocks

There are no interlocks needed for direct safety functions related to the containment purge system.

Class 1E Electrical Power Sources and Divisions

There are no Class 1E power sources for the containment purge system except the containment isolation valves.

Equipment to be Qualified for Harsh Environments

The safety-related portions of the containment purge system to be qualified for harsh environments are identified in Subsection 2.11.2.

Table 2.7.5.3-1 Containment Ventilation System Inspections, Tests, Analyses, and Acceptance Criteria

Design Commitment	Inspections, Tests, Analyses	Acceptance Criteria
1. The functional arrangement of the CVVS is as described in the Design Description of this Subsection 2.7.5.3.1.	1. Inspections of the as-built CVVS will be performed.	1. The as-built CVVS conforms with the functional arrangement as described in Design Description of this Subsection 2.7.5.3.1.
2. Deleted.	2. Deleted.	2. Deleted.
3. The fire dampers in ductwork of the containment purge system that penetrates fire barriers that are required to protect safe shutdown capability close fully when called upon to do so.	3. Tests of the as-built fire dampers will be performed.	3. Each as-built fire damper in ductwork of containment purge system that penetrates fire barrier that are required to protect safe-shutdown capability close under design air flow conditions.

Issues identified during the OER are entered into the HFE issues tracking system. Each OER item that is determined by analysis to be appropriate for incorporation in the design is documented in the HFE issues tracking system. The HFE issues tracking system provides the appropriate level of reviews to ensure that issues are tracked to completion. The OER is documented in the US-APWR operating experience review report.

2.9.1.2.2 Functional Requirements Analysis and Function Allocation

The objective of the functional requirements analysis and function allocation is to ensure that the safety functions of the US-APWR are assigned properly as HAs or to automated systems. Functional requirements analysis is the identification of functions that must be performed to satisfy plant safety and availability objectives. A functional requirements analysis is conducted to;

- Determine the objectives, performance requirements, and constraints of the design,
- Define the high-level functions that have to be accomplished to meet the objectives and desired performance (i.e., critical safety and critical power production functions).
- Define the relationships between high-level functions and plant systems (e.g., plant configurations or success paths) responsible for performing the functions
- Provide a framework for understanding the role of controllers (whether personnel or system) for controlling the plant

The functional requirements analysis and function allocation was ~~assigned~~performed for the Japanese APWR design. The analysis and allocation were reconfirmed and ~~with~~ additional analysis was performed to account for the differences in the US-APWR design.

The major function allocation (FA) changes for the US-APWR as compared to the standard Japanese PWR plants are to re-allocate manual actions to automatic actions for:

- Automatic isolation of a failed steam generator (SG)
- Automatic establishment of recirculation for emergency core cooling system (ECCS)

2.9.1.2.3 Task Analysis

The task analysis is based on the Japanese APWR design with additional analysis performed to account for differences in the US-APWR design. The objective of the task analysis is to identify the specific tasks that are needed for function accomplishment and the associated information, control, and task-support requirements.

The scope of the task analysis includes: selected representative and important tasks (from operations, maintenance, testing, inspection, and surveillance areas); full range of plant operating modes (startup, normal operations, abnormal and emergency operations,

Table 2.11.1-2 Containment Vessel Inspections, Tests, Analyses, and Acceptance Criteria

Design Commitment	Inspections, Tests, Analyses	Acceptance Criteria
1.a The PCCV pressure boundary is designed to meet ASME Code, Section III requirements.	1.a Refer to Table 2.2-4 ITAAC Item 5.	1.a Refer to Table 2.2-4 ITAAC Item 5.
1.b The PCCV liner materials of construction, fabrication, and installation meet ASME Code, Section III requirements.	1.b Inspection of the as-built PCCV and ASME Code Data Report(s) will be performed.	1.b ASME Code Data Report(s) (certified, when required by the ASME Code) exist and conclude that the as-built PCCV liner materials of construction, fabrication and installation meet ASME Code, Section III requirements.
1.c The PCCV liner welds meet ASME Code Section III requirements for non-destructive examination.	1.c Inspection of the as-built PCCV liner welds will be performed in accordance with ASME Code Section III.	1.c ASME Code Section III code reports exist and conclude that the ASME Code Section III requirements are met for non-destructive examination of the as-built PCCV liner welds.
2. The PCCV retains structural integrity at the design pressures of 68 psig.	2. Refer to Table 2.2-4 ITAAC Item 3.	2. Refer to Table 2.2-4 ITAAC Item 3.
3. The PCCV structural configuration is as shown in Table 2.2-2 and Figure 2.11.1-1.	3. Inspections of the as built PCCV will be performed.	3. The as-built PCCV configuration is reconciled with descriptions in Table 2.2-2 and Figure 2.11.1-1.
4. A set of drain lines from the SG compartments to the reactor cavity exists.	4. Inspections of the as-built drain lines to the reactor cavity will be performed.	4. A report exists and concludes that the as-built drain lines from the SG compartments to the as-built reactor cavity exist.
5. The reactor cavity includes a core debris trap.	5. Inspections of the as-built reactor cavity will be performed.	5. A report exists and concludes that the as-built reactor cavity includes a core debris trap.
6. The reactor cavity floor area and depth provide enhanced spreading of the debris bed for coolability.	6. Inspections of the as-built reactor cavity will be performed.	6. A report exists and concludes that the sufficient floor area and appropriate depth exists in the as-built reactor cavity.
7. Reactor cavity floor concrete is provided to protect against challenge to liner plate melt through.	7. Inspections of the as-built reactor cavity will be performed.	7. A report exists and concludes that the as-built reactor cavity includes cavity floor concrete which is provided to protect against challenge to liner plate melt through.