TABLE OF CONTENTS

Section	Title	Page
6.0	**ENGINEERED SAFETY FEATURES**	
6.1	**ENGINEERED SAFETY FEATURE MATERIALS**	**6.1-1**
6.1.1	METALLIC MATERIALS	6.1-1
6.1.1.1	MATERIALS SELECTION AND FABRICATION	6.1-1
6.1.1.2	COMPOSITION, COMPATIBILITY, AND STABILITY OF CONTAINMENT AND CORE SPRAY COOLANTS	6.1-2
6.1.2	ORGANIC MATERIALS	6.1-3
6.1.2.1	ELECTRICAL INSULATION	6.1-3
6.1.2.2	SURFACE COATINGS	6.1-3
6.1.2.3	ICE CONDENSER EQUIPMENT	6.1-4
6.1.2.4	IDENTIFICATION TAGS	6.1-4
6.1.2.5	VALVES AND INSTRUMENTS WITHIN CONTAINMENT	6.1-4
6.1.2.6	HEATING AND VENTILATING DOOR SEALS	6.1-5
6.1.2.7	MISCELLANEOUS	6.1-5
6.1.3	POST-ACCIDENT CHEMISTRY	6.1-5
6.1.3.1	BORIC ACID, H3BO3	6.1-5
6.1.3.2	LITHIUM HYDROXIDE	6.1-5
6.1.3.3	SODIUM TETRABORATE	6.1-5
6.1.3.4	FINAL POST-ACCIDENT CHEMISTRY	6.1-6
6.1.4	DEGREE OF COMPLIANCE WITH REGULATORY GUIDE 1.54 FOR PAINTS AND COATINGS INSIDE CONTAINMENT	6.1-6
6.2	**CONTAINMENT SYSTEMS**	
6.2.1	**CONTAINMENT FUNCTIONAL DESIGN**	**6.2.1-1**
6.2.1.1	DESIGN BASES	6.2.1-1
6.2.1.1.1	PRIMARY CONTAINMENT DESIGN BASES	6.2.1-1
6.2.1.2	PRIMARY CONTAINMENT SYSTEM DESIGN	6.2.1-3
6.2.1.3	DESIGN EVALUATION	6.2.1-3
6.2.1.3.1	PRIMARY CONTAINMENT EVALUATION	6.2.1-3
6.2.1.3.2	GENERAL DESCRIPTION OF CONTAINMENT PRESSURE ANALYSIS	6.2.1-4
6.2.1.3.3	LONG-TERM CONTAINMENT PRESSURE ANALYSIS	6.2.1-4
6.2.1.3.4	SHORT-TERM BLOWDOWN ANALYSIS	6.2.1-9
6.2.1.3.5	EFFECT OF STEAM BYPASS	6.2.1-17
6.2.1.3.6	MASS AND ENERGY RELEASE DATA	6.2.1-21
6.2.1.3.7	ACCIDENT CHRONOLOGY	6.2.1-29
6.2.1.3.8	MASS AND ENERGY BALANCE TABLES	6.2.1-29
6.2.1.3.9	CONTAINMENT PRESSURE DIFFERENTIALS	6.2.1-31
6.2.1.3.10	STEAM LINE BREAK INSIDE CONTAINMENT	6.2.1-34
6.2.1.3.11	MAXIMUM REVERSE PRESSURE DIFFERENTIALS	6.2.1-39

TABLE OF CONTENTS

Section	Title	Page
6.2.2	**CONTAINMENT HEAT REMOVAL SYSTEMS**	**6.2.2-1**
6.2.2.1	DESIGN BASES	6.2.2-1
6.2.2.2	SYSTEM DESIGN	6.2.2-3
6.2.2.3	DESIGN EVALUATION	6.2.2-5
6.2.2.4	TESTING AND INSPECTIONS	6.2.2-7
6.2.2.5	INSTRUMENTATION REQUIREMENTS	6.2.2-8
6.2.2.6	MATERIALS	6.2.2-9
6.2.3	**SECONDARY CONTAINMENT FUNCTIONAL DESIGN**	**6.2.3-1**
6.2.3.1	DESIGN BASES	6.2.3-1
6.2.3.1.1	SECONDARY CONTAINMENT ENCLOSURES	6.2.3-1
6.2.3.1.2	EMERGENCY GAS TREATMENT SYSTEM (EGTS)	6.2.3-1
6.2.3.1.3	AUXILIARY BUILDING GAS TREATMENT SYSTEM (ABGTS)	6.2.3-2
6.2.3.2	SYSTEM DESIGN	6.2.3-2
6.2.3.2.1	SECONDARY CONTAINMENT ENCLOSURES	6.2.3-2
6.2.3.2.2	EMERGENCY GAS TREATMENT SYSTEM (EGTS)	6.2.3-6
6.2.3.2.3	AUXILIARY BUILDING GAS TREATMENT SYSTEM (ABGTS)	6.2.3-10
6.2.3.3	DESIGN EVALUATION	6.2.3-12
6.2.3.3.1	SECONDARY CONTAINMENT ENCLOSURES	6.2.3-12
6.2.3.3.2	EMERGENCY GAS TREATMENT SYSTEM (EGTS)	6.2.3-14
6.2.3.3.3	AUXILIARY BUILDING GAS TREATMENT SYSTEM (ABGTS)	6.2.3-19
6.2.3.3.4	TRITIUM PRODUCTION CORE EVALUATION (UNIT 1 ONLY)	6.2.3-21
6.2.3.4	TEST AND INSPECTIONS	6.2.3-22
6.2.3.4.1	EMERGENCY GAS TREATMENT SYSTEM (EGTS)	6.2.3-22
6.2.3.4.2	AUXILIARY BUILDING GAS TREATMENT SYSTEM (ABGTS)	6.2.3-22
6.2.3.5	INSTRUMENTATION REQUIREMENTS	6.2.3-23
6.2.3.5.1	EMERGENCY GAS TREATMENT SYSTEM (EGTS)	6.2.3-23
6.2.3.5.2	AUXILIARY BUILDING GAS TREATMENT SYSTEM (ABGTS)	6.2.3-23
6.2.4	**CONTAINMENT ISOLATION SYSTEMS**	**6.2.4-1**
6.2.4.1	DESIGN BASES	6.2.4-1
6.2.4.2	SYSTEM DESIGN	6.2.4-4
6.2.4.2.1	DESIGN REQUIREMENTS	6.2.4-5
6.2.4.2.2	CONTAINMENT ISOLATION OPERATION	6.2.4-6
6.2.4.2.3	PENETRATION DESIGN	6.2.4-6
6.2.4.3	DESIGN EVALUATION	6.2.4-12
6.2.4.3.1	POSSIBLE LEAKAGE PATHS	6.2.4-14
6.2.4.4	TESTS AND INSPECTIONS	6.2.4-17
6.2.5	**COMBUSTIBLE GAS CONTROL IN CONTAINMENT**	**6.2.5-1**
6.2.5.1	DESIGN BASES	6.2.5-1
6.2.5.2	SYSTEM DESIGN	6.2.5-2
6.2.5.3	DESIGN EVALUATION	6.2.5-4
6.2.5.4	TESTING AND INSPECTIONS	6.2.5-5

TABLE OF CONTENTS

Section	Title	Page
6.2.5.5	INSTRUMENTATION APPLICATION	6.2.5-5
6.2.6	**CONTAINMENT LEAKAGE TESTING**	**6.2.6-1**
6.2.6.1	CONTAINMENT INTEGRATED LEAK RATE TEST	6.2.6-1
6.2.6.2	CONTAINMENT PENETRATION LEAKAGE RATE TEST	6.2.6-2
6.2.6.3	SCHEDULING AND REPORTING OF PERIODIC TESTS	6.2.6-6
6.3	**EMERGENCY CORE COOLING SYSTEM**	**6.3-1**
6.3.1	DESIGN BASES	6.3-1
6.3.1.1	RANGE OF COOLANT RUPTURES AND LEAKS	6.3-1
6.3.1.2	FISSION PRODUCT DECAY HEAT	6.3-2
6.3.1.3	REACTIVITY REQUIRED FOR COLD SHUTDOWN	6.3-2
6.3.1.4	CAPABILITY TO MEET FUNCTIONAL REQUIREMENTS	6.3-2
6.3.2	SYSTEM DESIGN	6.3-2
6.3.2.1	SCHEMATIC PIPING AND INSTRUMENTATION DIAGRAMS	6.3-2
6.3.2.2	EQUIPMENT AND COMPONENT DESIGN	6.3-2
6.3.2.3	APPLICABLE CODES AND CLASSIFICATIONS	6.3-15
6.3.2.4	MATERIALS SPECIFICATIONS AND COMPATIBILITY	6.3-16
6.3.2.5	DESIGN PRESSURES AND TEMPERATURES	6.3-16
6.3.2.6	COOLANT QUANTITY	6.3-16
6.3.2.7	PUMP CHARACTERISTICS	6.3-17
6.3.2.8	HEAT EXCHANGER CHARACTERISTICS	6.3-17
6.3.2.9	ECCS FLOW DIAGRAMS	6.3-17
6.3.2.10	RELIEF VALVES	6.3-17
6.3.2.11	SYSTEM RELIABILITY	6.3-17
6.3.2.12	PROTECTION PROVISIONS	6.3-22
6.3.2.13	PROVISIONS FOR PERFORMANCE TESTING	6.3-22
6.3.2.14	NET POSITIVE SUCTION HEAD	6.3-22
6.3.2.15	CONTROL OF MOTOR-OPERATED ISOLATION VALVES	6.3-23
6.3.2.16	MOTOR-OPERATED VALVES AND CONTROLS	6.3-23
6.3.2.17	MANUAL ACTIONS	6.3-23
6.3.2.18	PROCESS INSTRUMENTATION	6.3-23
6.3.2.19	MATERIALS	6.3-23
6.3.3	PERFORMANCE EVALUATION	6.3-23
6.3.3.1	EVALUATION MODEL	6.3-23
6.3.3.2	ECCS PERFORMANCE	6.3-24
6.3.3.3	ALTERNATE ANALYSIS METHODS	6.3-24
6.3.3.4	FUEL ROD PERFORATIONS	6.3-25
6.3.3.5	EFFECTS OF ECCS OPERATION ON THE CORE	6.3-25
6.3.3.6	USE OF DUAL FUNCTION COMPONENTS	6.3-25
6.3.3.7	LAG TIMES	6.3-27
6.3.3.8	THERMAL SHOCK CONSIDERATIONS	6.3-27
6.3.3.9	LIMITS ON SYSTEM PARAMETERS	6.3-27
6.3.3.10	USE OF RHR SPRAY	6.3-28

TABLE OF CONTENTS

Section	Title	Page
6.3.4	TESTS AND INSPECTIONS	6.3-28
6.3.4.1	PREOPERATIONAL TESTS	6.3-28
6.3.4.2	COMPONENT TESTING	6.3-29
6.3.4.3	PERIODIC SYSTEM TESTING	6.3-29
6.3.5	INSTRUMENTATION APPLICATION	6.3-30
6.3.5.1	TEMPERATURE INDICATION	6.3-30
6.3.5.2	PRESSURE INDICATION	6.3-30
6.3.5.3	FLOW INDICATION	6.3-31
6.3.5.4	LEVEL INDICATION	6.3-31
6.3.5.5	VALVE POSITION INDICATION	6.3-32
6.4	**HABITABILITY SYSTEMS**	**6.4-1**
6.4.1	DESIGN BASES	6.4-1
6.4.2	SYSTEM DESIGN	6.4-1
6.4.2.1	DEFINITION OF MCRHS AREA	6.4-1
6.4.2.2	VENTILATION SYSTEM DESIGN	6.4-2
6.4.2.3	LEAK TIGHTNESS	6.4-2
6.4.2.4	INTERACTION WITH OTHER ZONES AND PRESSURE-CONTAINING EQUIPMENT	6.4-3
6.4.2.5	SHIELDING DESIGN	6.4-4
6.4.2.6	CONTROL ROOM EMERGENCY PROVISIONS	6.4-4
6.4.2.7	MCRHS FIRE PROTECTION	6.4-4
6.4.3	SYSTEM OPERATIONAL PROCEDURES	6.4-5
6.4.4	DESIGN EVALUATIONS	6.4-7
6.4.4.1	RADIOLOGICAL PROTECTION	6.4-7
6.4.4.2	TOXIC GAS PROTECTION	6.4-7
6.4.5	TESTING AND INSPECTION	6.4-9
6.4.6	INSTRUMENTATION REQUIREMENTS	6.4-9
6.5	**FISSION PRODUCT REMOVAL AND CONTROL SYSTEMS**	**6.5-1**
6.5.1	ENGINEERED SAFETY FEATURE (ESF) FILTER SYSTEMS	6.5-1
6.5.1.1	DESIGN BASES	6.5-1
6.5.1.2	SYSTEM DESIGN	6.5-2
6.5.1.3	DESIGN EVALUATION	6.5-5
6.5.1.4	TESTS AND INSPECTIONS	6.5-5
6.5.1.5	INSTRUMENTATION REQUIREMENTS	6.5-6
6.5.1.6	MATERIALS	6.5-7
6.5.2	CONTAINMENT SPRAY SYSTEM FOR FISSION PRODUCT CLEANUP	6.5-8
6.5.2.1	DESIGN BASES	6.5-8
6.5.2.2	SYSTEM DESIGN	6.5-8
6.5.2.3	DESIGN EVALUATION	6.5-8
6.5.2.4	TESTS AND INSPECTIONS	6.5-8
6.5.2.5	INSTRUMENTATION REQUIREMENTS	6.5-8
6.5.2.6	MATERIALS	6.5-8

TABLE OF CONTENTS

Section	Title	Page
6.5.3	FISSION PRODUCT CONTROL SYSTEMS	6.5-8
6.5.3.1	PRIMARY CONTAINMENT	6.5-8
6.5.3.2	SECONDARY CONTAINMENTS	6.5-10
6.5.4	ICE CONDENSER AS A FISSION PRODUCT CLEANUP SYSTEM	6.5-10
6.5.4.1	ICE CONDENSER DESIGN BASIS (FISSION PRODUCT CLEANUP FUNCTION)	6.5-11
6.5.4.2	ICE CONDENSER SYSTEM DESIGN	6.5-11
6.5.4.3	ICE CONDENSER SYSTEM DESIGN EVALUATION (FISSION PRODUCT CLEANUP FUNCTION)	6.5-11
6.5.4.4	CONDENSER SYSTEM TESTS AND INSPECTIONS	6.5-13
6.5.4.5	ICE CONDENSER MATERIALS	6.5-14
6.6	**INSERVICE INSPECTION OF ASME CODE CLASS 2 AND 3 COMPONENTS**	**6.6-1**
6.6.1	COMPONENTS SUBJECT TO EXAMINATION AND/OR TEST	6.6-1
6.6.2	ACCESSIBILITY	6.6-1
6.6.3	EXAMINATION TECHNIQUES AND PROCEDURES	6.6-1
6.6.4	INSPECTION INTERVALS	6.6-1
6.6.5	EXAMINATION CATEGORIES AND REQUIREMENTS	6.6-1
6.6.6	EVALUATION OF EXAMINATION RESULTS	6.6-1
6.6.7	SYSTEM PRESSURE TESTS	6.6-2
6.6.8	PROTECTION AGAINST POSTULATED PIPING FAILURES	6.6-2
6.7	**ICE CONDENSER SYSTEM**	**6.7-1**
6.7.1	FLOOR STRUCTURE AND COOLING SYSTEM	6.7-1
6.7.1.1	DESIGN BASES	6.7-1
6.7.1.2	SYSTEM DESIGN	6.7-4
6.7.1.3	DESIGN EVALUATION	6.7-5
6.7.2	WALL PANELS	6.7-8
6.7.2.1	DESIGN BASIS	6.7-8
6.7.2.2	SYSTEM DESIGN	6.7-8
6.7.2.3	DESIGN EVALUATION	6.7-9
6.7.3	LATTICE FRAMES AND SUPPORT COLUMNS	6.7-9
6.7.3.1	DESIGN BASIS	6.7-9
6.7.3.2	SYSTEM DESIGN	6.7-12
6.7.3.3	DESIGN EVALUATION	6.7-13
6.7.4	ICE BASKETS	6.7-14
6.7.4.1	DESIGN BASIS	6.7-14
6.7.4.2	SYSTEM DESIGN	6.7-16
6.7.4.3	DESIGN EVALUATION	6.7-18
6.7.5	CRANE AND RAIL ASSEMBLY	6.7-20
6.7.5.1	DESIGN BASIS	6.7-20
6.7.5.2	SYSTEM DESIGN	6.7-21
6.7.5.3	DESIGN EVALUATION	6.7-21
6.7.6	REFRIGERATION SYSTEM	6.7-22

TABLE OF CONTENTS

Section	Title	Page
6.7.6.1	DESIGN BASIS	6.7-22
6.7.6.2	SYSTEM DESIGN	6.7-23
6.7.6.3	DESIGN EVALUATION	6.7-26
6.7.7	AIR HANDLING UNITS	6.7-30
6.7.7.1	DESIGN BASIS	6.7-30
6.7.7.2	SYSTEM DESIGN	6.7-31
6.7.7.3	DESIGN EVALUATION	6.7-31
6.7.8	LOWER INLET DOORS	6.7-32
6.7.8.1	DESIGN BASIS	6.7-32
6.7.8.2	SYSTEM DESIGN	6.7-35
6.7.8.3	DESIGN EVALUATION	6.7-37
6.7.9	LOWER SUPPORT STRUCTURE	6.7-38
6.7.9.1	DESIGN BASIS	6.7-38
6.7.9.2	SYSTEM DESIGN	6.7-39
6.7.9.3	DESIGN EVALUATION	6.7-41
6.7.10	TOP DECK AND DOORS	6.7-50
6.7.10.1	DESIGN BASIS	6.7-50
6.7.10.2	SYSTEM DESIGN	6.7-51
6.7.11	INTERMEDIATE DECK AND DOORS	6.7-55
6.7.11.1	DESIGN BASIS	6.7-55
6.7.11.2	SYSTEM DESIGN	6.7-56
6.7.11.3	DESIGN EVALUATION	6.7-57
6.7.12	AIR DISTRIBUTION DUCTS	6.7-58
6.7.12.1	DESIGN BASIS	6.7-58
6.7.12.2	SYSTEM DESIGN	6.7-59
6.7.12.3	DESIGN EVALUATION	6.7-59
6.7.13	EQUIPMENT ACCESS DOOR	6.7-59
6.7.13.1	DESIGN BASIS	6.7-59
6.7.13.2	SYSTEM DESIGN	6.7-60
6.7.13.3	DESIGN EVALUATION	6.7-60
6.7.14	ICE TECHNOLOGY, ICE PERFORMANCE, AND ICE CHEMISTRY	6.7-60
6.7.14.1	DESIGN BASIS	6.7-60
6.7.14.2	SYSTEM DESIGN	6.7-61
6.7.14.3	DESIGN EVALUATION	6.7-61
6.7.15	ICE CONDENSER INSTRUMENTATION	6.7-66
6.7.15.1	DESIGN BASIS	6.7-66
6.7.15.2	DESIGN DESCRIPTION	6.7-67
6.7.15.3	DESIGN EVALUATION	6.7-69
6.7.16	ICE CONDENSER STRUCTURAL DESIGN	6.7-69
6.7.16.1	APPLICABLE CODES, STANDARDS, AND SPECIFICATIONS	6.7-69
6.7.16.2	LOADS AND LOADING COMBINATIONS	6.7-69
6.7.16.3	DESIGN AND ANALYTICAL PROCEDURES	6.7-70
6.7.16.4	STRUCTURAL ACCEPTANCE CRITERIA	6.7-70
6.7.17	SEISMIC ANALYSIS	6.7-71

TABLE OF CONTENTS

Section	Title	Page
6.7.17.1	SEISMIC ANALYSIS METHODS	6.7-71
6.7.17.2	SEISMIC LOAD DEVELOPMENT	6.7-74
6.7.17.3	VERTICAL SEISMIC RESPONSE	6.7-75
6.7.18	MATERIALS	6.7-75
6.7.18.1	DESIGN CRITERIA	6.7-75
6.7.18.2	ENVIRONMENTAL EFFECTS	6.7-77
6.7.18.3	COMPLIANCE WITH 10 CFR 50, APPENDIX B	6.7-78
6.7.18.4	MATERIALS SPECIFICATIONS	6.7-79
6.7.19	TESTS AND INSPECTIONS	6.7-80
6.8	**AIR RETURN FANS**	**6.8-1**
6.8.1	DESIGN BASES	6.8-1
6.8.2	SYSTEM DESCRIPTION	6.8-1
6.8.3	SAFETY EVALUATION	6.8-2
6.8.4	INSPECTION AND TESTING	6.8-3
6.8.5	INSTRUMENTATION REQUIREMENTS	6.8-3
6.9	**MOTOR-OPERATED VALVE (MOV) PROGRAMS**	**6.9-1**

TABLE OF CONTENTS

Section	Title	Page

THIS PAGE INTENTIONALLY BLANK

LIST OF TABLES

Section	Title
TABLE 6.1-1	DELETED BY AMENDMENT 97
TABLE 6.2.1-1	STRUCTURAL HEAT SINKS
TABLE 6.2.1-2	PUMP FLOW RATES VS. TIME
TABLE 6.2.1-3	ENERGY BALANCES
TABLE 6.2.1-4	ENERGY BALANCES
TABLE 6.2.1-5	MATERIAL PROPERTY DATA
TABLE 6.2.1-6	TMD INPUT FOR WATTS BAR
TABLE 6.2.1-7	TMD FLOW INPUT DATA FOR WATTS BAR
TABLE 6.2.1-8	CALCULATED MAXIMUM PEAK PRESSURES IN LOWER COMPARTMENT ELEMENTS ASSUMING UNAUGMENTED FLOW
TABLE 6.2.1-9	CALCULATED MAXIMUM PEAK PRESSURES IN THE ICE CONDENSER COMPARTMENT ASSUMING UNAUGMENTED FLOW
TABLE 6.2.1-10	CALCULATED MAXIMUM DIFFERENTIAL PRESSURES ACROSS THE OPERATING DECK OR LOWER CRANE WALL ASSUMING UNAUGMENTED FLOW
TABLE 6.2.1-11	CALCULATED MAXIMUM DIFFERENTIAL PRESSURES ACROSS THE UPPER CRANE WALL ASSUMING UNAUGMENTED FLOW
TABLE 6.2.1-12	SENSITIVITY STUDIES FOR D. C. COOK PLANT
TABLE 6.2.1-13	WATTS BAR ICE CONDENSER DESIGN PARAMETERS
TABLE 6.2.1-14	ALLOWABLE LEAKAGE AREA FOR VARIOUS REACTOR COOLANT SYSTEM BREAK SIZES
TABLE 6.2.1-15	SYSTEM PARAMETERS INITIAL CONDITIONS
TABLE 6.2.1-16	DOUBLE-ENDED PUMP SUCTION GUILLOTINE BREAK - BLOWDOWN MASS AND ENERGY RELEASES
TABLE 6.2.1-17	DOUBLE-ENDED PUMP SUCTION GUILLOTINE BREAK - REFLOOD MASS AND ENERGY RELEASE - MINIMUM SAFETY INJECTION
TABLE 6.2.1-18	DOUBLE-ENDED PUMP SUCTION GUILLOTINE BREAK - MINIMUM SAFETY INJECTION PRINCIPAL PARAMETERS DURING REFLOOD
TABLE 6.2.1-19	DOUBLE-ENDED PUMP SUCTION GUILLOTINE BREAK - POST-REFLOOD MASS AND ENERGY RELEASES - MINIMUM SAFETY INJECTION
TABLE 6.2.1-20	DECAY HEAT CURVE

LIST OF TABLES

Section	Title
TABLE 6.2.1-21	DELETED BY AMENDMENT 97
TABLE 6.2.1-22	DELETED BY AMENDMENT 97
TABLE 6.2.1-23	BREAK MASS AND ENERGY FLOW FROM A DOUBLE-ENDED COLD LEG GUILLOTINE BREAK
TABLE 6.2.1-24	BREAK MASS AND ENERGY FLOW FROM A DOUBLE-ENDED HOT LEG GUILLOTINE BREAK
TABLE 6.2.1-25	DOUBLE-ENDED PUMP SUCTION LOCA SEQUENCE OF EVENTS
TABLE 6.2.1-26A	DOUBLE-ENDED PUMP SUCTION GUILLOTINE BREAK MINIMUM SAFETY INJECTION - MASS BALANCE
TABLE 6.2.1-26B	DOUBLE-ENDED PUMP SUCTION GUILLOTINE BREAK MINIMUM SAFETY INJECTION - ENERGY BALANCE
TABLE 6.2.1-27A	STEAM LINE BREAK BLOWDOWN
TABLE 6.2.1-27B	STEAM GENERATOR ENCLOSURE GEOMETRY
TABLE 6.2.1-27C	STEAM GENERATOR ENCLOSURE FLOW PATH DATA
TABLE 6.2.1-27D	PEAK DIFFERENTIAL PRESSURE - STEAM GENERATOR ENCLOSURE
TABLE 6.2.1-28	MASS AND ENERGY RELEASE RATES INTO PRESSURIZER ENCLOSURE
TABLE 6.2.1-29A	PRESSURIZER GEOMETRIC DATA
TABLE 6.2.1-29B	PEAK DIFFERENTIAL PRESSURE - PRESSURIZER ENCLOSURE
TABLE 6.2.1-30	MASS AND ENERGY RELEASE RATES 127 IN2 COLD LEG
TABLE 6.2.1-31	REACTOR CAVITY VOLUMES
TABLE 6.2.1-32	FLOW PATH DATA (REACTOR CAVITY)
TABLE 6.2.1-33	CONTAINMENT DATA (ECCS ANALYSIS)
TABLE 6.2.1-34	MAJOR CHARACTERISTICS OF STRUCTURAL HEAT SINKS INSIDE SEQUOYAH NUCLEAR PLANT CONTAINMENT - UPPER COMPARTMENT
TABLE 6.2.1-35	MAJOR CHARACTERISTICS OF STRUCTURAL HEAT SINKS INSIDE SEQUOYAH NUCLEAR PLANT CONTAINMENT - LOWER COMPARTMENT
TABLE 6.2.1-36	MAJOR CHARACTERISTICS OF STRUCTURAL HEAT SINKS INSIDE SEQUOYAH NUCLEAR PLANT CONTAINMENT - DEAD-ENDED COMPARTMENT
TABLE 6.2.1-37	MAXIMUM REVERSE PRESSURE DIFFERENTIAL PRESSURE ANALYSIS BASE CASE

LIST OF TABLES

Section	Title
TABLE 6.2.1-38	ICE CONDENSER STEAM EXIT FLOW VS. TIME VS. SUMP TEMPERATURE
TABLE 6.2.1-39	MASS AND ENERGY RELEASE RATES FOR SPECIFIED STEAM LINE BREAKS
TABLE 6.2.1-39	MASS AND ENERGY RELEASE RATES FOR SPECIFIED STEAM LINE BREAKS (CONT'D)
TABLE 6.2.1-39	MASS AND ENERGY RELEASE RATES FOR SPECIFIED STEAM LINE BREAKS (CONT'D)
TABLE 6.2.1-40	STEAM LINE BREAK CASES FOR CORE INTEGRITY
TABLE 6.2.1-41	LINE BREAK(1) DESCRIPTIONS FOR MASS AND ENERGY RELEASES
TABLE 6.2.1-42	SMALL BREAK DESCRIPTIONS FOR MASS AND ENERGY
TABLE 6.2.1-43	LARGE BREAK ANALYSIS - ASSOCIATED TIMES
TABLE 6.2.1-44	SMALL BREAK ANALYSIS - SMALL SPLIT - ASSOCIATED TIMES
TABLE 6.2.1-45	SAFETY INJECTION FLOW MINIMUM SAFEGUARDS
TABLE 6.2.2-1	CONTAINMENT SPRAY PUMP/MOTOR DESIGN PARAMETERS
TABLE 6.2.2-2	CONTAINMENT SPRAY HEAT EXCHANGER DESIGN PARAMETERS
TABLE 6.2.2-3	FAILURE MODES AND EFFECTS ANALYSIS
TABLE 6.2.3-1	DUAL CONTAINMENT CHARACTERISTICS
TABLE 6.2.3-2	FAILURE MODES AND EFFECTS ANALYSIS EMERGENCY GAS TREATMENT SYSTEM
TABLE 6.2.3-3	FAILURE MODES AND EFFECTS ANALYSIS FOR PASSIVE FAILURE FOR THE ABGTS
TABLE 6.2.3-3	FAILURE MODES AND EFFECTS ANALYSIS FOR THE ABGTS
TABLE 6.2.4-1	WATTS BAR NUCLEAR PLANT CONTAINMENT PENETRATIONS AND BARRIERS
TABLE 6.2.4-1	WATTS BAR NUCLEAR PLANT CONTAINMENT PENETRATIONS AND BARRIERS (SHEET 65 OF 69)
TABLE 6.2.4-1	WATTS BAR NUCLEAR PLANT CONTAINMENT PENETRATIONS AND BARRIERS (SHEET 66 OF 69)
TABLE 6.2.4-1	WATTS BAR NUCLEAR PLANT CONTAINMENT PENETRATIONS AND BARRIERS (SHEET 67 OF 69)

LIST OF TABLES

Section	Title
TABLE 6.2.4-1	WATTS BAR NUCLEAR PLANT CONTAINMENT PENETRATIONS AND BARRIERS (SHEET 68 OF 69)
TABLE 6.2.4-1	WATTS BAR NUCLEAR PLANT CONTAINMENT PENETRATIONS AND BARRIERS (SHEET 69 OF 69)
TABLE 6.2.4-2	POSSIBLE BYPASS LEAKAGE PATHS TO THE AUXILIARY BUILDING
TABLE 6.2.4-3	PREVENTION OF BYPASS LEAKAGE TO THE ATMOSPHERE
TABLE 6.2.4-4	INSTRUMENT LINES PENETRATING PRIMARY CONTAINMENT
TABLE 6.2.6-1	PENETRATIONS SUBJECTED TO TYPE B TESTING
TABLE 6.2.6-2	CONTAINMENT ISOLATION VALVES SUBJECTED TO TYPE C TESTING
TABLE 6.2.6-3	VALVES EXEMPTED FROM TYPE C LEAK TESTING
TABLE 6.2.6-4	CONTAINMENT VESSEL PRESSURE AND LEAK TEST REACTOR BUILDING CONTAINMENT PENETRATION STATUS
TABLE 6.3-1	EMERGENCY CORE COOLING SYSTEM COMPONENT PARAMETERS
TABLE 6.3-2	MATERIALS EMPLOYED FOR EMERGENCY CORE COOLING SYSTEM COMPONENTS
TABLE 6.3-3	SEQUENCE OF CHANGE-OVER OPERATION, INJECTION TO RECIRCULATION
TABLE 6.3-3A	EVALUATION OF TIME SEQUENCE ASSOCIATED WITH CHANGEOVER OPERATION FROM INJECTION TO RECIRCULATION
TABLE 6.3-4	NORMAL OPERATING STATUS OF EMERGENCY CORE COOLING SYSTEM COMPONENTS FOR CORE COOLING
TABLE 6.3-5	EMERGENCY CORE COOLING SYSTEM SHARED FUNCTIONS EVALUATION
TABLE 6.3-6	MAXIMUM RECIRCULATION LOOP LEAKAGE EXTERNAL TO CONTAINMENT
TABLE 6.3-7	DELETED BY AMENDMENT 85
TABLE 6.3-8	FAILURE MODES AND EFFECTS ANALYSIS FOR ACTIVE FAILURES FOR THE SAFETY INJECTION SYSTEM
TABLE 6.3-9	FAILURE MODES AND EFFECTS ANALYSIS FOR THE SAFETY INJECTION SYSTEM (PASSIVE FAILURES RECIRC. MODE)

LIST OF TABLES

Section	Title
TABLE 6.3-10	PRINCIPAL ECCS VALVE POSITIONS
TABLE 6.3-11	NORMALIZED DECAY HEAT
TABLE 6.4-1	(SHEET 1 OF 1) AIR LEAKAGE (EXFILTRATION) PATHS IN THE WATTS BAR MCRHS AREA CONTROL ROOM
TABLE 6.4-2	(SHEET 1 OF 1) AIR LEAKAGE (INFILTRATION) PATHS IN THE WATTS BAR MCRHS AREA CONTROL ROOM
TABLE 6.5-1	REGULATORY GUIDE 1.52, REV. 2, SECTION APPLICABILITY FOR THE EMERGENCY GAS TREATMENT SYSTEM
TABLE 6.5-2	REGULATORY GUIDE 1.52, REV. 2, SECTION APPLICABILITY FOR THE AUXILIARY BUILDING GAS TREATMENT SYSTEM
TABLE 6.5-3	REGULATORY GUIDE 1.52, REV.2, SECTION APPLICABILITY FOR THE REACTOR BUILDING PURGE VENTILATION SYSTEM
TABLE 6.5-4	REGULATORY GUIDE 1.52, REV. 2, SECTION APPLICABILITY FOR THE MAIN CONTROL ROOM AIR CLEANUP SUBSYSTEM
TABLE 6.5-5	ESF AIR CLEANUP UNIT DATA
TABLE 6.5-6	DELETED IN FSAR AMENDMENT 65
TABLE 6.5-7	PRIMARY CONTAINMENT OPERATION FOLLOWING A DBA
TABLE 6.5-8	SECONDARY CONTAINMENT OPERATION FOLLOWING A DBA
TABLE 6.7-1	WALL PANEL DESIGN LOADS(1)
TABLE 6.7-2	ICE BASKET LOAD SUMMARY MINIMUM TEST LOADS
TABLE 6.7-3	SUMMARY OF STRESSES IN BASKET DUE TO DESIGN LOADS
TABLE 6.7-4	ICE BASKET MATERIAL MINIMUM YIELD STRESS
TABLE 6.7-5	ALLOWABLE STRESS LIMITS (D + OBE) FOR ICE BASKET MATERIALS
TABLE 6.7-6	ALLOWABLE STRESS LIMITS (D + SSE), (D + DBA) FOR ICE BASKET MATERIALS
TABLE 6.7-7	ALLOWABLE STRESS LIMITS (D + SSE + DBA) FOR ICE BASKET MATERIALS
TABLE 6.7-8	ICE BASKET CLEVIS PIN STRESS SUMMARY
TABLE 6.7-9	ICE BASKET MOUNTING BRACKET ASSEMBLY STRESS SUMMARY
TABLE 6.7-10	ICE BASKET PLATE STRESS SUMMARY
TABLE 6.7-11	ICE BASKET V-BOLT STRESS SUMMARY

LIST OF TABLES

Section	Title
TABLE 6.7-12	ICE BASKET - BASKET END STRESS SUMMARY
TABLE 6.7-13	ICE BUCKET COUPLING SCREW STRESS SUMMARY3 INCH ELEVATION(1)
TABLE 6.7-14	ICE BUCKET COUPLING SCREW STRESS SUMMARY12 FOOT ELEVATION(1)
TABLE 6.7-15	ICE BASKET COUPLING SCREW STRESS SUMMARY 24 FOOT ELEVATION(1)
TABLE 6.7-16	ICE BUCKET COUPLING SCREW STRESS SUMMARY 36 FOOT ELEVATION(1)
TABLE 6.7-17	CRANE AND RAIL ASSEMBLY DESIGN LOADS
TABLE 6.7-18	REFRIGERATION SYSTEM PARAMETERS
TABLE 6.7-18	REFRIGERATION SYSTEM PARAMETERS CONTINUED
TABLE 6.7-19	LOWER INLET DOOR DESIGN PARAMETERS AND LOADS
TABLE 6.7-20	DESIGN LOADS AND PARAMETERS TOP DECK
TABLE 6.7-21	SUMMARY OF RESULTS UPPER BLANKET DOOR STRUCTURAL ANALYSIS - LOCA
TABLE 6.7-22	DESIGN LOADS AND PARAMETERS INTERMEDIATE DECK
TABLE 6.7-23	SUMMARY OF WALTZ MILL TESTS
TABLE 6.7-24	ICE CONDENSER RTDS
TABLE 6.7-25	ICE CONDENSER ALLOWABLE LIMITS (1)
TABLE 6.7-26	SELECTION OF STRUCTURAL STEELS IN RELATION TO PREVENTION OF NON-DUCTILE FRACTURE OF ICE CONDENSER COMPONENTS
TABLE 6.7-27	SUMMARY OF WATTS BAR LOADS - TANGENTIAL CASE OBTAINED USING THE TWO-MASS DYNAMIC MODEL
TABLE 6.7-28	SUMMARY OF WATTS BAR LOADS - RADIAL CASE OBTAINED USING THE TWO-MASS DYNAMIC MODEL
TABLE 6.7-29	SUMMARY OF LOAD RESULTS OF FIVE NON-LINEAR DYNAMIC MODELS
TABLE 6.7-30	SUMMARY OF PARAMETERS USED IN THE SEISMIC ANALYSIS

LIST OF FIGURES

Section	Title
FIGURE 6.1-1	DELETED BY AMENDMENT 97
FIGURE 6.2.1-1	CONTAINMENT PRESSURE VERSUS TIME
FIGURE 6.2.1-2A	UPPER COMPARTMENT TEMPERATURE VERSUS TIME
FIGURE 6.2.1-2B	LOWER COMPARTMENT TEMPERATURE VERSUS TIME
FIGURE 6.2.1-3	ACTIVE AND INACTIVE SUMP TEMPERATURE TRANSIENTS
FIGURE 6.2.1-4	MELTED ICE MASS TRANSIENT
FIGURE 6.2.1-4A	COMPARISON OF CONTAINMENT PRESSURE VERSUS ICE MELT
FIGURE 6.2.1-5	PLAN AT EQUIPMENT ROOMS ELEVATION
FIGURE 6.2.1-6	CONTAINMENT SECTION VIEW
FIGURE 6.2.1-7	PLAN VIEW AT ICE CONDENSER ELEVATION ICE CONDENSER COMPARTMENTS
FIGURE 6.2.1-8	LAYOUT OF CONTAINMENT SHELL
FIGURE 6.2.1-9	TMD CODE NETWORK
FIGURE 6.2.1-10	UPPER AND LOWER COMPARTMENT PRESSURE TRANSIENT FOR WORST CASE BREAK COMPARTMENT (ELEMENT 1) HAVING A DEHL BREAK
FIGURE 6.2.1-11	UPPER AND LOWER COMPARTMENT PRESSURE TRANSIENT FOR WORST CASE BREAK COMPARTMENT (ELEMENT 1) HAVING A DECL BREAK.
FIGURE 6.2.1-12	ILLUSTRATION OF CHOKED FLOW CHARACTERISTICS
FIGURE 6.2.1-13	SENSITIVITY OF PEAK PRESSURE TO AIR COMPRESSION RATIO
FIGURE 6.2.1-14	STEAM CONCENTRATION IN A VERTICAL DISTRIBUTION CHANNEL
FIGURE 6.2.1-15	PEAK COMPRESSION PRESSURE VERSUS COMPRESSION RATIO
FIGURE 6.2.1-16	PEAK COMPARTMENT PRESSURE VERSUS BLOWDOWN RATE
FIGURE 6.2.1-17	SENSITIVITY OF PEAK COMPRESSION PRESSURE TO DECK BYPASS
FIGURE 6.2.1-18	PRESSURE INCREASE VERSUS DECK AREA FROM DECK LEAKAGE TESTS
FIGURE 6.2.1-19	ENERGY RELEASE AT TIME OF COMPRESSION PEAK PRESSURE FROM

LIST OF FIGURES

Section	Title
	FULL-SCALE SECTION TESTS WITH 1-FOOT DIAMETER BASKETS
FIGURE 6.2.1-20	PRESSURE INCREASE VERSUS DECK AREA FROM DECK LEAKAGE TESTS
FIGURE 6.2.1-21	**DELETED BY AMENDMENT 97**
FIGURE 6.2.1-22	DELETED BY AMENDMENT 97
FIGURE 6.2.1-23	DELETED BY AMENDMENT 97
FIGURE 6.2.1-24	DELETED BY AMENDMENT 97
FIGURE 6.2.1-25	DELETED BY AMENDMENT 97
FIGURE 6.2.1-26	DELETED BY AMENDMENT 97
FIGURE 6.2.1-27	CONTAINMENT MODEL SCHEMATIC.
FIGURE 6.2.1-28	REACTOR CAVITY TMD NETWORK.
FIGURE 6.2.1-29	REACTOR VESSEL ANNULUS
FIGURE 6.2.1-30	127 SQUARE INCH COLD LEG BREAK (REACTOR CAVITY ANALYSIS)
FIGURE 6.2.1-31	127 SQUARE INCH COLD LEG BREAK (REACTOR CAVITY ANALYSIS)
FIGURE 6.2.1-32	127 SQUARE INCH COLD LEG BREAK (REACTOR CAVITY ANALYSIS)
FIGURE 6.2.1-33	127 SQUARE INCH COLD LEG BREAK (REACTOR CAVITY ANALYSIS)
FIGURE 6.2.1-34	127 SQUARE INCH COLD LEG BREAK (REACTOR CAVITY ANALYSIS)
FIGURE 6.2.1-35	127 SQUARE INCH COLD LEG BREAK (REACTOR CAVITY ANALYSIS)
FIGURE 6.2.1-36	127 SQUARE INCH COLD LEG BREAK (REACTOR CAVITY ANALYSIS)
FIGURE 6.2.1-37	127 SQUARE INCH COLD LEG BREAK (REACTOR CAVITY ANALYSIS)
FIGURE 6.2.1-38	127 SQUARE INCH COLD LEG BREAK (REACTOR CAVITY ANALYSIS)
FIGURE 6.2.1-39	127 SQUARE INCH COLD LEG BREAK (REACTOR CAVITY ANALYSIS)
FIGURE 6.2.1-40	127 SQUARE INCH COLD LEG BREAK (REACTOR CAVITY ANALYSIS)

LIST OF FIGURES

Section	Title
FIGURE 6.2.1-41	127 SQUARE INCH COLD LEG BREAK (REACTOR CAVITY ANALYSIS)
FIGURE 6.2.1-42	127 SQUARE INCH COLD LEG BREAK (REACTOR CAVITY ANALYSIS)
FIGURE 6.2.1-43	127 SQUARE INCH COLD LEG BREAK (REACTOR CAVITY ANALYSIS)
FIGURE 6.2.1-44	127 SQUARE INCH COLD LEG BREAK (REACTOR CAVITY ANALYSIS)
FIGURE 6.2.1-45	127 SQUARE INCH COLD LEG BREAK (REACTOR CAVITY ANALYSIS)
FIGURE 6.2.1-46	127 SQUARE INCH COLD LEG BREAK (REACTOR CAVITY ANALYSIS)
FIGURE 6.2.1-47	127 SQUARE INCH COLD LEG BREAK (REACTOR CAVITY ANALYSIS)
FIGURE 6.2.1-48	127 SQUARE INCH COLD LEG BREAK (REACTOR CAVITY ANALYSIS)
FIGURE 6.2.1-49	127 SQUARE INCH COLD LEG BREAK (REACTOR CAVITY ANALYSIS)
FIGURE 6.2.1-50	127 SQUARE INCH COLD LEG BREAK (REACTOR CAVITY ANALYSIS)
FIGURE 6.2.1-51	127 SQUARE INCH COLD LEG BREAK (REACTOR CAVITY ANALYSIS)
FIGURE 6.2.1-52	127 SQUARE INCH COLD LEG BREAK (REACTOR CAVITY ANALYSIS)
FIGURE 6.2.1-53	127 SQUARE INCH COLD LEG BREAK (REACTOR CAVITY ANALYSIS)
FIGURE 6.2.1-54	127 SQUARE INCH COLD LEG BREAK (REACTOR CAVITY ANALYSIS)
FIGURE 6.2.1-55	127 SQUARE INCH COLD LEG BREAK (REACTOR CAVITY ANALYSIS)
FIGURE 6.2.1-56	127 SQUARE INCH COLD LEG BREAK (REACTOR CAVITY ANALYSIS)
FIGURE 6.2.1-57	127 SQUARE INCH COLD LEG BREAK (REACTOR CAVITY ANALYSIS)
FIGURE 6.2.1-58	127 SQUARE INCH COLD LEG BREAK (REACTOR CAVITY ANALYSIS)
FIGURE 6.2.1-59	127 SQUARE INCH COLD LEG BREAK (REACTOR CAVITY ANALYSIS)

LIST OF FIGURES

Section	Title
FIGURE 6.2.1-60	127 SQUARE INCH COLD LEG BREAK (REACTOR CAVITY ANALYSIS)
FIGURE 6.2.1-61	127 SQUARE INCH COLD LEG BREAK (REACTOR CAVITY ANALYSIS)
FIGURE 6.2.1-62	127 SQUARE INCH COLD LEG BREAK (REACTOR CAVITY ANALYSIS)
FIGURE 6.2.1-63	127 SQUARE INCH COLD LEG BREAK (REACTOR CAVITY ANALYSIS)
FIGURE 6.2.1-64	127 SQUARE INCH COLD LEG BREAK (REACTOR CAVITY ANALYSIS)
FIGURE 6.2.1-65	127 SQUARE INCH COLD LEG BREAK (REACTOR CAVITY ANALYSIS)
FIGURE 6.2.1-66	127 SQUARE INCH COLD LEG BREAK (REACTOR CAVITY ANALYSIS)
FIGURE 6.2.1-67	127 SQUARE INCH COLD LEG BREAK (REACTOR CAVITY ANALYSIS)
FIGURE 6.2.1-68	127 SQUARE INCH COLD LEG BREAK (REACTOR CAVITY ANALYSIS)
FIGURE 6.2.1-69	COMPARTMENT TEMPERATURE 1.4 FT^2/LOOP, 100.6% POWER AFW RUNOUT PROTECTION FAILURE
FIGURE 6.2.1-70	LOWER COMPARTMENT PRESSURE 1.4 FT2 LOOP, 100.6% POWER AFW RUNOUT PROTECTION FAILURE
FIGURE 6.2.1-71	COMPARTMENT TEMPERATURE 0.35 FT^2 SPLIT, 30% POWER AFW RUNOUT PROTECTION FAILURE
FIGURE 6.2.1-72	LOWER COMPARTMENT PRESSURE 0.35 FT^2 SPLIT, 30% POWER AFW RUNOUT PROTECTION FAILURE
FIGURE 6.2.1-73	COMPARTMENT TEMPERATURE 0.6 FT^2 SPLIT, 30% POWER AFW RUNOUT PROTECTION FAILURE
FIGURE 6.2.1-74	LOWER COMPARTMENT PRESSURE 0.6 FT^2 SPLIT, 30% POWER AFW RUNOUT PROTECTION FAILURE
FIGURE 6.2.1-75	MAXIMUM REVERSE PRESSURE DIFFERENTIAL MODEL
FIGURE 6.2.1-76	MAXIMUM REVERSE PRESSURE DIFFERENTIAL UPPER AND LOWER COMPARTMENT PRESSURES
FIGURE 6.2.1-77	MAXIMUM REVERSE PRESSURE DIFFERENTIAL UPPER AND LOWER COMPARTMENT TEMPERATURES
FIGURE 6.2.1-78	MAXIMUM REVERSE PRESSURE DIFFERENTIAL UPPER TO LOWER COMPARTMENT FLOWRATES

LIST OF FIGURES

Section	Title
FIGURE 6.2.1-79	MAXIMUM REVERSE PRESSURE DIFFERENTIAL CASE 6 UPPER AND LOWER COMPARTMENT PRESSURES
FIGURE 6.2.1-80	MAXIMUM REVERSE PRESSURE DIFFERENTIAL CASE 6 UPPER AND LOWER COMPARTMENT TEMPERATURES
FIGURE 6.2.1-81	STEAM GENERATOR ENCLOSURE NODALIZATION
FIGURE 6.2.1-82	FLOW PATHS FOR TMD STEAM GENERATOR ENCLOSURE SHORT-TERM PRESSURE ANALYSIS
FIGURE 6.2.1-83	PRESSURE TRANSIENT BETWEEN BREAK ELEMENT AND UPPER COMPARTMENT (STEAM GENERATOR ENCLOSURE ANALYSIS)
FIGURE 6.2.1-84	DIFFERENTIAL PRESSURE TRANSIENT ACROSS THE STEAM GENERATOR VESSEL (STEAM GENERATOR ENCLOSURE ANALYSIS)
FIGURE 6.2.1-85	DIFFERENTIAL PRESSURE TRANSIENT ACROSS THE STEAM GENERATOR VESSEL (STEAM GENERATOR ENCLOSURE ANALYSIS)
FIGURE 6.2.1-86	PRESSURE VERSUS TIME FOR THE BREAK ELEMENT (STEAM GENERATOR ENCLOSURE ANALYSIS)
FIGURE 6.2.1-86A	UPPER COMPARTMENT PRESSURE VERSUS TIME (STEAM GENERATOR ENCLOSURE ANALYSIS)
FIGURE 6.2.1-87	NODALIZATION PRESSURE ENCLOSURE ANALYSIS
FIGURE 6.2.1-88	PRESSURE TRANSIENT BETWEEN BREAK ELEMENT AND UPPER COMPARTMENT (PRESSURIZER ENCLOSURE ANALYSIS)
FIGURE 6.2.1-89	PRESSURE DIFFERENTIAL ACROSS THE PRESSURIZER VESSEL (PRESSURIZER ENCLOSURE ANALYSIS)
FIGURE 6.2.1-90	PRESSURE DIFFERENTIAL ACROSS THE PRESSURIZER VESSEL (PRESSURIZER ENCLOSURE ANALYSIS)
FIGURE 6.2.1-91	PRESSURE DIFFERENTIAL ACROSS THE PRESSURIZER VESSEL (PRESSURIZER ENCLOSURE ANALYSIS)
FIGURE 6.2.1-92	PRESSURE VERSUS TIME FOR THE BREAK ELEMENT (PRESSURIZER ENCLOSURE ANALYSIS)
FIGURE 6.2.2-1	POWERHOUSE UNITS 1 & 2 MECHANICAL FLOW DIAGRAM CONTAINMENT SPRAY SYSTEM
FIGURE 6.2.2-2	CONTAINMENT SPRAY PUMP PERFORMANCE CURVES

LIST OF FIGURES

Section	Title
FIGURE 6.2.2-3	REACTOR BLDGS. UNITS 1 & 2 MECHANICAL CONTAINMENT SPRAY SYSTEM PIPING PLAN OF SPRAY PATTERNS FROM C.S. LOOP HEADER A
FIGURE 6.2.2-4	POWERHOUSE-AUXILIARY & REACTOR BLDGS UNITS 1 & 2 MECHANICAL CONTAINMENT SPRAY SYSTEM PIPING
FIGURE 6.2.2-5	REACTOR BLDGS. UNITS 1 & 2 MECHANICAL CONTAINMENT SPRAY SYSTEM PIPING PLAN OF SPRAY PATTERNS FROM C.S. LOOP HEADER B
FIGURE 6.2.2-6	REACTOR BLDGS. UNITS 1 & 2 MECHANICAL CONTAINMENT SPRAY SYSTEM PIPING SECTION OF SPRAY PATTERNS FROM C.S. LOOP HEADER B
FIGURE 6.2.3-1	TYPICAL MECHANICAL PENETRATION SEALS
FIGURE 6.2.3-2	TYPICAL PURGE PENETRATION ARRANGEMENT
FIGURE 6.2.3-3	TYPICAL ELECTRICAL PENETRATIONS
FIGURE 6.2.3-4	AUXILIARY BUILDING ISOLATION BARRIER
FIGURE 6.2.3-5	AUXILIARY BUILDING ISOLATION BARRIER
FIGURE 6.2.3-6	AUXILIARY BUILDING ISOLATION BARRIER
FIGURE 6.2.3-7	AUXILIARY BUILDING ISOLATION BARRIER
FIGURE 6.2.3-8	AUXILIARY BUILDING ISOLATION BARRIER
FIGURE 6.2.3-9	AUXILIARY BUILDING ISOLATION BARRIER
FIGURE 6.2.3-10	AUXILIARY BUILDING ISOLATION BARRIER
FIGURE 6.2.3-11	REACTOR BUILDING - UNITS 1 & 2 FLOW DIAGRAM - HEATING AND VENTILATION AIR FLOW
FIGURE 6.2.3-12	POWERHOUSE UNITS 1 & 2 ELECTRICAL LOGIC DIAGRAM - EMERGENCY GAS TREATMENT SYSTEM
FIGURE 6.2.3-13	POWERHOUSE UNITS 1 & 2 ELECTRICAL LOGIC DIAGRAM - EMERGENCY GAS TREATMENT
FIGURE 6.2.3-14	POWERHOUSE UNIT 1 ELECTRICAL LOGIC DIAGRAM - EMERGENCY GAS TREATMENT
FIGURE 6.2.3-15	POWERHOUSE UNITS 1 & 2 ELECTRICAL CONTROL DIAGRAM - EMERGENCY GAS TREATMENT SYSTEM
FIGURE 6.2.3-15-SH-A	POWERHOUSE UNIT 2 ELECTRICAL CONTROL DIAGRAM - EMERGENCY GAS TREATMENT
FIGURE 6.2.3-16	POWERHOUSE UNITS 1 & 2 AUXILIARY BUILDING -FLOW DIAGRAM -HEATING & VENTILATING AIR FLOW

LIST OF FIGURES

Section	Title
FIGURE 6.2.3-17	POST-ACCIDENT ANNULUS PRESSURE AND REACTOR UNIT VENT FLOW RATE TRANSIENTS
FIGURE 6.2.3-17A	POST-ACCIDENT ANNULUS PRESSURE AND REACTOR UNIT VENT FLOW RATE TRANSIENTS
FIGURE 6.2.3-18	REACTOR BUILDING UNITS 1 & 2 MECHANICAL HEATING AND VENTILATING
FIGURE 6.2.3-19	REACTOR BUILDING UNITS 1 & 2 MECHANICAL HEATING, VENTILATION, AND AIR CONDITIONING
FIGURE 6.2.4-1	TYPE 1, MAIN STEAM X-L3A, X-L3B, X-L3C, X-13D
FIGURE 6.2.4-2	TYPE II, FEEDWATER X-12A, X-L2B, X-12C, X-12D
FIGURE 6.2.4-3	TYPE III, RESIDUAL HEAT REMOVAL PUMP RETURN X-17, PUMP SUPPLY X-I07
FIGURE 6.2.4-4	TYPE IV AND V (TYPE IV SOCKET WELD ENDS, TYPE V BUTT WELD ENDS)
FIGURE 6.2.4-5	TYPE VI AND VII (TYPE VI FOR SOCKET WELD SS PROCESS LINES, TYPE VII FOR BUTT WELD SS PROCESS LINES)
FIGURE 6.2.4-6	TYPE VIII, FOR BUTT WELD C.S. PROCESS LINES
FIGURE 6.2.4-7	TYPE IX, FOR SS PROCESS LINES
FIGURE 6.2.4-8	TYPE X, INSTRUMENT PENETRATIONS
FIGURE 6.2.4-9	TYPE XII, EMERGENCY SUMP
FIGURE 6.2.4-10	TYPE XI, EMERGENCY SUMP
FIGURE 6.2.4-11	TYPE XIII, VENTILATION DUCT PENETRATION
FIGURE 6.2.4-12	TYPE XIV, EQUIPMENT HATCH
FIGURE 6.2.4-13	TYPE XV, PERSONNEL ACCESS
FIGURE 6.2.4-14	TYPE XVI, TRANSFER TUBE
FIGURE 6.2.4-15	TYPE XVII, INCORE INSTRUMENTATION THIMBLE ASSEMBLY RENEWAL LINE
FIGURE 6.2.4-16	TYPE XVIII, ICE BLOWING LINE
FIGURE 6.2.4-17	TYPE XIX, ELECTRICAL PENETRATION
FIGURE 6.2.4-17A	TYPE XX FEEDWATER BYPASS PENETRATIONS X-8A, X-8B, X-8C, X-8D
FIGURE 6.2.4-17B	TYPE XXI, UPPER AND LOWER CONTAINMENT ERCW SUPPLY AND RETURN CCW FROM EXCESS LETDOWN HEAT EXCHANGER AND FROM PUMP ODOLERS

LIST OF FIGURES

Section	Title
FIGURE 6.2.4-17C	TYPE XXII MULTI LINE PENETRATION X-39
FIGURE 6.2.4-17D	TYPE XXIII INSTRUMENT ROOM CHILLED H20 SUPPLY AND RETURN
FIGURE 6.2.4-17E	TYPE XXIV UHI X-L08, X-109
FIGURE 6.2.4-18	MECHANICAL CONTAINMENT PENETRATION
FIGURE 6.2.4-19	POWERHOUSE REACTOR BUILDING UNIT 1 & 2 MECHANICAL SLEEVES-SHIELD BUILDING
FIGURE 6.2.4-20	SCHEMATIC DIAGRAM OF LEAKAGE PATHS
FIGURE 6.2.4-21	ELECTRICAL LOGIC DIAGRAM CONTAINMENT ISOLATION
FIGURE 6.2.4-22A	THROUGH 6.2.4-22II DELETED BY AMENDMENT 65
FIGURE 6.2.4-23	ICE BLOWING AND NEGATIVE RETURN LINES - BLIND FLANGE DETAILS
FIGURE 6.2.5-1	DELETED BY AMENDMENT 95
FIGURE 6.2.5-2	DELETED BY AMENDMENT 62
FIGURE 6.2.5-3	POWERHOUSE REACTOR BUILDING UNITS 1 & 2 - MECHANICAL HEATING, VENTILATING AND AIR CONDITIONING
FIGURE 6.2.5-4	POWERHOUSE REACTOR BUILDING UNITS 1 & 2 - MECHANICAL HEATING, VENTILATING AND AIR CONDITIONING
FIGURE 6.2.5-5	POWERHOUSE REACTOR BUILDING UNITS 1 & 2 - MECHANICAL HEATING, VENTILATION AND AIR CONDITIONING
FIGURE 6.2.5-6	SAMPLE LOOP FLOW DIAGRAM
FIGURE 6.2.5-7	DELETED BY AMENDMENT 95
FIGURE 6.2.5-7A	DELETED BY AMENDMENT 95
FIGURE 6.2.5-8	IGNITER LOCATIONS - LOWER COMPARTMENT AND DEAD ENDED COMPARTMENTS
FIGURE 6.2.5-9	IGNITER LOCATIONS - LOWER COMPARTMENTS
FIGURE 6.2.5-10	IGNITER LOCATIONS - UPPER PLENUM AND UPPER COMPARTMENTS
FIGURE 6.2.5-11	IGNITER LOCATIONS - DOME
FIGURE 6.2.5-12	IGNITER LOCATIONS - ELEVATION
FIGURE 6.3-1-1	POWERHOUSE UNIT 1 SAFETY INJECTION SYSTEM - FLOW DIAGRAM

LIST OF FIGURES

Section	Title
FIGURE 6.3-1-2	POWERHOUSE UNIT 1 & 2 ELECTRICAL CONTROL DIAGRAM - SAFETY INJECTION SYSTEM
FIGURE 6.3-1-2-SH-A	POWERHOUSE UNIT 1 ELECTRICAL CONTROL DIAGRAM - SAFETY INJECTION SYSTEM
FIGURE 6.3-1-3	POWERHOUSE UNIT 1 ELECTRICAL CONTROL DIAGRAM SAFETY INJECTION
FIGURE 6.3-1-3-SH-A	POWERHOUSE UNIT 2 ELECTRICAL CONTROL DIAGRAM - SAFETY INJECTION
FIGURE 6.3-1-3-SH-B	POWERHOUSE UNIT 1 ELECTRICAL CONTROL DIAGRAM - SAFETY INJECTION
FIGURE 6.3-2	PERFORMANCE CURVES FOR THE RESIDUAL HEAT REMOVAL PUMPS
FIGURE 6.3-3	PERFORMANCE CURVES FOR THE SAFETY INJECTION PUMPS
FIGURE 6.3-4	PERFORMANCE CURVES FOR THE CHARGING PUMPS
FIGURE 6.3-5	SHEETS 1 AND 2, DELETED BY AMENDMENT 63
FIGURE 6.3-6	CONTAINMENT SUMP
FIGURE 6.5-1	ICE CONDENSER
FIGURE 6.7-1	ISOMETRIC OF ICE CONDENSER
FIGURE 6.7-2	FLOOR STRUCTURE
FIGURE 6.7-3	WEAR SLAB TOP SURFACE AREA SHOWING TYPICAL COOLANT PIPING LAYOUT
FIGURE 6.7-4	LATTICE FRAME ORIENTATION
FIGURE 6.7-5	LOAD DISTRIBUTION FOR TANGENTIAL SEISMIC AND BLOWDOWN LOADS IN ANALYTICAL MODEL
FIGURE 6.7-6	LATTICE FRAME
FIGURE 6.7-7	LATTICE FRAME ANALYSIS MODEL
FIGURE 6.7-8	TYPICAL BOTTOM ICE BASKET ASSEMBLY
FIGURE 6.7-9	COMBINATIONS OF CONCENTRIC AXIAL LOAD AND DISTRIBUTION LOAD THAT WILL CAUSE FAILURE OF A PERFORATED METAL ICE CONDENSER BASKET MATERIAL
FIGURE 6.7-10	CRANE ASSEMBLY
FIGURE 6.7-11	CRANE RAIL ASSEMBLY
FIGURE 6.7-12	REFRIGERANT CYCLE DIAGRAM
FIGURE 6.7-13	GLYCOL CYCLE TO EACH CONTAINMENT

LIST OF FIGURES

Section	Title
FIGURE 6.7-14	SCHEMATIC FLOW DIAGRAMS OF AIR COOLING CYCLE
FIGURE 6.7-15	AIR HANDLING UNIT SUPPORT STRUCTURE
FIGURE 6.7-16	FLOW AREA - PRESSURE DIFFERENTIAL
FIGURE 6.7-17	LOWER INLET DOOR ASSEMBLY
FIGURE 6.7-18	DETAILS OF LOWER INLET DOOR SHOWING HINGE, PROPORTIONING MECHANISM LIMIT SWITCHES AND SEALS
FIGURE 6.7-19	INLET DOOR FRAME ASSEMBLY
FIGURE 6.7-20	INLET DOOR PANEL ASSEMBLY
FIGURE 6.7-21	LOWER INLET DOOR SHOCK ABSORBER ASSEMBLY
FIGURE 6.7-22	FOUR LOOP ICE CONDENSER LOWER SUPPORT STRUCTURE CONCEPTUAL PLAN AND SECTIONS
FIGURE 6.7-23	FOUR LOOP ICE CONDENSER LOWER SUPPORT STRUCTURE GENERAL ASSEMBLY
FIGURE 6.7-24	ANTS MODEL ASSEMBLY
FIGURE 6.7-25	FINITE ELEMENT MODEL OF PORTAL FRAME
FIGURE 6.7-26	SCHEMATIC DIAGRAM OF FORCES APPLIED TO THREE PIER LOWER SUPPORT STRUCTURE
FIGURE 6.7-27	FORCE TRANSIENT HOT LEG BREAK
FIGURE 6.7-28	DLF SPECTRA HOT LEG BREAK FORCE TRANSIENT
FIGURE 6.7-29	TOP DECK TEST ASSEMBLY
FIGURE 6.7-30	DETAILS OF TOP DECK DOOR ASSEMBLY
FIGURE 6.7-31	INTERMEDIATE DECK DOOR ASSEMBLY
FIGURE 6.7-32	AIR DISTRIBUTION DUCT
FIGURE 6.7-33	AIR DISTRIBUTION DUCT
FIGURE 6.7-34	PHASE DIAGRAM FOR $NA_2 B_4 0_7.10 H_2O$/WATER SYSTEM AT ONE ATMOSPHERE
FIGURE 6.7-35	ICE BED COMPACTION VERSUS TIME
FIGURE 6.7-36	TEST ICE BED COMPACTION VERSUS ICE BED HEIGHT
FIGURE 6.7-37	TOTAL ICE COMPACTION VERSUS ICE BED HEIGHT
FIGURE 6.7-38	ICE CONDENSER RTD LOCATION
FIGURE 6.7-39	BLOCK DIAGRAM ICE CONDENSER TEMPERATURE MONITORING SYSTEM
FIGURE 6.7-40	DOOR MONITORING ZONES

LIST OF FIGURES

Section	Title
FIGURE 6.7-41	POWERHOUSE UNIT 1 WIRING DIAGRAMS ICE CONDENSER SYSTEM SCHEMATIC DIAGRAMS
FIGURE 6.7-42	DELETED BY AMENDMENT 89
FIGURE 6.7-43	DELETED BY AMENDMENT 89
FIGURE 6.7-44	MODEL OF HORIZONTAL LATTICE FRAME STRUCTURE
FIGURE 6.7-45	GROUP OF SIX INTERCONNECTED LATTICE FRAMES
FIGURE 6.7-46	LATTICE FRAME LCE BASKET GAP
FIGURE 6.7-47	TYPICAL DISPLACEMENT TIME HISTORIES FOR 12-FOOT BASKET WITH END SUPPORTS - PLUCK TEST
FIGURE 6.7-48	NON LINEAR DYNAMIC MODEL
FIGURE 6.7-49	3-MASS TANGENTIAL ICE BASKET MODEL
FIGURE 6.7-50	9-MASS RADIAL ICE BASKET MODEL
FIGURE 6.7-51	48-FOOT BEAM MODEL
FIGURE 6.7-52	PHASING MASS MODEL OF ADJACENT LATTICE FRAME BAYS
FIGURE 6.7-53	PHASING STUDY MODEL, 1 LEVEL LATTICE FRAME 300 DEGREES NON-LINEAR MODEL
FIGURE 6.7-54	TYPICAL CRANE WALL DISPLACEMENT
FIGURE 6.7-55	TYPICAL ICE BASKET DISPLACEMENT RESPONSE
FIGURE 6.7-56	TYPICAL ICE BASKET IMPACT FORCE RESPONSE
FIGURE 6.7-57	TYPICAL CRANE WALL PANEL LOAD RESPONSE
FIGURE 6.7-58	WALL PANEL DESIGN LOAD DISTRIBUTION OBTAINED USING THE 48-FOOT BEAM MODEL TANGENTIAL CASE
FIGURE 6.7-59	WALL PANEL DESIGN LOAD DISTRIBUTION OBTAINED USING THE 48-FOOT BEAM MODEL RADIAL CASE

LIST OF FIGURES

Section **Title**

THIS PAGE INTENTIONALLY BLANK

6.0 ENGINEERED SAFETY FEATURES

6.1 ENGINEERED SAFETY FEATURE MATERIALS

6.1.1 Metallic Materials

6.1.1.1 Materials Selection and Fabrication

Typical material specifications used for the principal pressure retaining applications in components in the Engineered Safety Features (ESF) are listed inTable 5.2-9. All materials utilized are procured in accordance with the material specification requirements of the ASME Boiler and Pressure Vessel Code, Section III, plus applicable and appropriate Addenda and Code Cases.

The welding materials used for joining the ferritic base materials of the ESF conform to, or are equivalent to, ASME Material Specifications SFA 5.1, 5.2, 5.5, 5.17, 5.18, and 5.20. The welding materials used for joining nickel-chromium-iron alloy in similar base material combination and in dissimilar ferritic or austenitic base material combination conform to ASME Material Specifications SFA 5.11 and 5.14. The welding materials used for Joining the austenitic stainless steel base materials conform to ASME Material Specifications SFA 5.4 and 5.9. These materials are tested and qualified to the requirements of the ASME Code, Section III and Section IX rules and are used in procedures which have been qualified to these same rules. The methods utilized to control delta ferrite content in austenitic stainless steel weldments are discussed in Section 5.2.5.7.

The parts of components in contact with borated water are fabricated of or clad with austenitic stainless steel or equivalent corrosion resistant material [Ref. 4]. The integrity of the safety-related components of the ESF is maintained during all stages of component manufacture. Austenitic stainless steel is utilized in the final heat treated condition as required by the respective ASME Code Section II material specification for the particular type or grade of alloy. Furthermore, it is required that austenitic stainless steel materials used in the ESF components be handled, protected, stored, and cleaned according to recognized and accepted methods which are designed to minimize contamination which could lead to stress corrosion cracking. The rules covering these controls are stipulated in Westinghouse process specifications, which are discussed in Section 5.2.5.1. Additional information concerning austenitic stainless steel, including the avoidance of sensitization and the prevention of intergranular attack, can be found in Section 5.2.5. No cold worked austenitic stainless steels having yield strengths greater than 90,000 psi are used for components of the ESF within the Westinghouse standard scope.

Westinghouse supplied components within the containment that would be exposed to core cooling water and containment sprays in the event of a loss-of-coolant accident utilize materials listed in Table 5.2-9. These components are manufactured primarily of stainless steel or other corrosion resistant, high temperature material. The integrity of the materials of construction for ESF equipment when exposed to post design basis accident (DBA) conditions has been evaluated. Post-DBA conditions were

conservatively represented by test conditions. The test program[1] performed by Westinghouse considered spray and core cooling solutions of the design chemical compositions, as well as the design chemical compositions contaminated with corrosion and deterioration products which may be transferred to the solution during recirculation. The effects of sodium (free caustic), chlorine (chloride), and fluorine (fluoride) on austenitic stainless steels were considered. Based on the results of this investigation, as well as testing by ORNL and others, the behavior of austenitic stainless steels in the post-DBA environment will be very acceptable. No cracking is anticipated on any equipment even in the presence of postulated levels of contaminants, provided the core cooling and spray solution pH is maintained at an adequate level. The inhibitive properties of alkalinity (hydroxyl ion) against chloride cracking and the inhibitive characteristic of boric acid on fluoride cracking have been demonstrated. Note that qualified coatings inside primary containment located within the zone of influence are assumed to fail for the analysis in the event of a loss-of-coolant accident. The zone of influence for qualified coatings is defined as a spherical zone with a radius of 10 times the break diameter. Coatings on exposed surfaces outside the zone of influence within the containment are not subject to breakdown under exposure to the spray solution and can withstand the temperature and pressure expected in the event of a loss-of-coolant accident.

6.1.1.2 Composition, Compatibility, and Stability of Containment and Core Spray Coolants

The vessels used for storing ESF coolants include the accumulators and the refueling water storage tank.

The accumulators are carbon steel clad with austenitic stainless steel [Ref. 4]. Because of the corrosion resistance of these materials, significant corrosive attack on the storage vessels is not expected.

The accumulators are vessels filled with borated water and pressurized with nitrogen gas. The nominal boron concentration, as boric acid, is 3150 ppm. Samples of the solution in the accumulators are taken periodically for checks of boron concentration. Principal design parameters of the accumulators are listed in Table 6.3-1.

The refueling water storage tank is a source of borated cooling water for injection. The nominal boron concentration, as boric acid, is 3200 ppm . The temperature of the refueling water is maintained above the solubility limit for the maximum boron concentration. Principal design parameters of the refueling water storage tank are given in Section 9.2.7.

The ice in the ice condenser is borated by adding sodium tetraborate to the ice. The aqueous solution resulting from the melted ice has a nominal boron concentration of 1900 $\pm$100 ppm. In the event of an accident, this solution would be delivered to the containment sump. Containment sump pH is also controlled by the sodium tetraborate in the ice. The pH of the ice is maintained between 9.0 and 9.5, which results in a sump pH of at least 7.5.

Information concerning hydrogen release by the corrosion of containment metals and the control of the hydrogen and combustible gas concentrations within the containment following a LOCA is discussed in Section 6.2.5.

6.1.2 Organic Materials

For paints and coatings inside containment, the conformance with Regulatory Guide 1.54 is described in Section 6.1.4.

Organic materials within the primary containment are identified and quantified according to the following categories: electrical insulation, surface coatings, miscellaneous ALARA (catch basin), containment and shielding (lead blankets), ice condenser equipment, and identification tags for valves and instruments. There is no wood or asphalt inside the containment. The effects of elastomers and plastic on hydrogen generation have been evaluated and determined to be inconsequential. Therefore, the quantities identified below are considered historical and need not be revised due to design changes.

The information in this section is based on a single reactor unit.

6.1.2.1 Electrical Insulation

The typical types of electrical cable insulation/jacket material that are utilized within the primary containment are: silcon rubber, polyethylene, ethylene rubber, chlorosulfonated polyethlene, polylefin, cross linked polyethlene, kapton. These materials are not significant contributors to hydrongen generation during a design basis accident (approximately 28,000 lbs).

6.1.2.2 Surface Coatings

Material	Mass, lbs
Concrete Surfaces:	
Epoxy	2070
Phenolic-epoxy	300
Steel Surfaces:	
Phenolic-epoxy	1810

Steel surfaces are undercoated with approximately 85% zinc in a silicate binder (carbozinc 11), or epoxy, such as Amerlock 400.

Protective coatings for use in the reactor containment have been evaluated as to their suitability in post-DBA conditions. Tests have shown that the epoxy and modified phenolic systems are the most desirable of the generic types evaluated for in-containment use. This evaluation considered resistance to high temperature and chemical conditions anticipated following a LOCA, as well as high radiation resistance [Ref. 2]. Coating systems qualified as CSL-1, for one plant may be used by the other plants provided the applicable DBA requirements for the area where it is to be used are

enveloped by the qualification testing system. These requirements include but are not limited to temperature, pressure, radiation and spray solution.

6.1.2.3 Ice Condenser Equipment

Material	Mass, lbs
Lower Door Seals (Styrene butadiene)	530
Equipment Access Door Seals (Natural rubber)	5
Vent curtain (Laminated mylar)	5
Ice Condenser Seal:	
Natural Rubber	600
Nylon	360
Miscellaneous Washers:	
Noryl SEIOO (phenylene oxide)	50
Gasketing Material:	
Neoprene	5060
Drain Line Expansion Joint	

6.1.2.4 Identification Tags

Material	Mass, lbs
Valves:	
ABS (acrylonitrile-butadiene-styrene)	50
Instruments:	
ABS (acylonitrile-butadiene-styrene)	30

6.1.2.5 Valves and Instruments within Containment

Material	Mass, lbs
Diaphragms, O-Rings, Solenoid Seals:	
Buna-N (acrylonitrile-Butadiene)	130

6.1.2.6 Heating and Ventilating Door Seals

Material	Mass, lbs
Neoprene (chloroprene)	100

6.1.2.7 Miscellaneous

Material	Mass, lbs
Catch Basins (polyethylene)	100
Lead Shielding Blankets (Hypalon, Vinyl, Methyllpolysiloxance)	1200

6.1.3 Post-Accident Chemistry

Following a LOCA, the emergency core cooling solution recirculated in containment is composed of boric acid (H_3BO_3) from the reactor coolant, refueling water storage tank (RWST), cold leg accumulators and affected injection piping, lithium hydroxide (LiOH) from the reactor coolant and sodium tetraborate ($Na_2B_4O_7$) from the ice in the ice condenser.

6.1.3.1 Boric Acid, H_3BO_3

Boric acid up to a maximum concentration of 3300 ppm boron, can be found in the reactor coolant loop (4 loops, reactor vessel, pressurizer), and boric acid at a maximum concentration of 3300 ppm boron is found in the cold leg injection accumulators, the refueling water storage tank, and in associated piping. This limit may be exceeded during Mode 6 operation. These subsystems, when at maximum volume, represent a total mass of boric acid in the amount of 93,928 pounds.

6.1.3.2 Lithium Hydroxide

Lithium Hydroxide at a maximum concentration of 7.6 ppm lithium is found in the reactor coolant system for pH control.

6.1.3.3 Sodium Tetraborate

Sodium tetraborate is an additive in the ice stored in the ice condenser for the purpose of maintaining containment sump pH of at least 7.5 after all the ice has melted.

The minimum amount of ice assumed in the Post-LOCA sump pH analysis is 2.26 x 10^6 lbs [Ref. 3]. Boric acid and NaOH are formed during ice melt following a LOCA according to the following equation:

$$Na_2B_4O_7 + 7H_2O \rightarrow 2NaOH + 4H_3BO_3$$

6.1.3.4 Final Post-Accident Chemistry

The final post-accident sump pH is greater than 7.5. The estimated sump pH versus time calculation indicates that the post-LOCA sump pH remains within the allowable range of 7.5 to 10.0 for the duration of the event.

6.1.4 Degree of Compliance with Regulatory Guide 1.54 for Paints and Coatings Inside Containment

TVA is committed to adhere to Appendix B of 10 CFR 50 and ANSI N45.2 as required to produce a quality end product. Basically, it is TVA's position that the Quality Assurance Program (QA) for protective coatings inside the containment should control four activities in the coating program. The four major areas to be controlled are:

(1) The coating material itself, by extending requirements on the manufacturing process and qualification of coating systems through the use of applicable portions of ANSI Standards N101.2 and N512.

(2) The preparation of the surface to which coatings are to be applied.

(3) The inspection process.

(4) The application of the coating systems.

All four of these controlled activities have appropriate documentation and records to meet Appendix B requirements.

TVA agrees with Regulatory Guide 1.54, except the endorsement to ANSI N101.4 in paragraph C.1.

TVA's protective coating application program within the containment is in conformance with Appendix B to 10 CFR 50 and ANSI N45.2. In addition, applicable provisions found in ANSI N101.4 have been incorporated into TVA surface preparation, coating application/inspection specifications, and coating QA procedures.

Unqualified/uncontrolled coatings are accounted for and maintained within the limits specified in the analysis for containment coatings and in the transport analysis for the zone of influence. The zone of influence is defined as that area at the water surface into which a falling paint particle does not settle to the bottom, but rather, is transported to the sump strainer assembly by the flow of water.

REFERENCES

(1) WCAP-7803, "Behavior of Austenitic Stainless Steel in Post Hypothetical Loss of Coolant Environment."

(2) WCAP-7825, "Evaluation of Protective Coatings for Use in Reactor Containment."

(3) WBT-D-1413, “Response to Comments on FSAR Mark-ups,” dated January 7, 2010.

(4) TVA’s letter to NRC dated July 30, 2003, Petition Pursuant to 10 CFR 2.206 - Reactor Coolant System Stainless Steel Cladding. (Unit 1)

Table 6.1-1 Deleted by Amendment 97

Deleted by Amendment 97

Figure 6.1-1 Deleted by Amendment 97

THIS PAGE INTENTIONALLY BLANK

6.2 CONTAINMENT SYSTEMS

6.2.1 Containment Functional Design

6.2.1.1 Design Bases

6.2.1.1.1 Primary Containment Design Bases

The containment is designed to assure that an acceptable upper limit of leakage of radioactive material is not exceeded under design basis accident conditions. For purposes of integrity, the containment may be considered as the containment vessel and containment isolation system. This structure and system are directly relied upon to maintain containment integrity. The emergency gas treatment system and Reactor Building function to keep out-leakage minimal (the Reactor Building also serves as a protective structure), but are not factors in determining the design leak rate.

The containment is specifically designed to meet the intent of the applicable General Design Criteria listed in Section 3.1. This section, Chapter 3, and other portions of Chapter 6 present information showing conformance of design of the containment and related systems to these criteria.

The ice condenser is designed to limit the containment pressure below the design pressure for all reactor coolant pipe break sizes up to and including a double-ended severance. Characterizing the performance of the ice condenser requires consideration of the rate of addition of mass and energy to the containment as well as the total amounts of mass and energy added. Analyses have shown that the accident which produces the highest blowdown rate into a condenser containment will result in the maximum containment pressure rise; that accident is the double-ended guillotine or split severance of a reactor coolant pipe. The design basis accident for containment analysis based on sensitivity studies is therefore the double-ended guillotine severance of a reactor coolant pipe at the reactor coolant pump suction. Post-blowdown energy releases can also be accommodated without exceeding containment design pressure.

The functional design of the containment is based upon the following accident input source term assumptions and conditions:

(1) The design basis blowdown energy of 315.1 x 10^6 Btu and mass of 499.6 x 10^3 lb put into the containment. (See Section 6.2.1.3.6)

(2) A core power of 3411 MWt (plus 2% allowance for calorimetric error). (See Section 6.2.1.3.6)

(3) The minimum engineered safety features are (i.e., the single failure criterion applied to each safety system) comprised of the following:

(a) The ice condenser which condenses steam generated during a LOCA, thereby limiting the pressure peak inside the containment (see Section 6.7).

(b) The containment isolation system which closes those fluid penetrations not serving accident-consequence limiting purposes (see Section 6.2.4).

(c) The containment spray system which sprays cool water into the containment atmosphere, thereby limiting the pressure peak (particularly in the long term - see Section 6.2.2).

(d) The emergency gas treatment system (EGTS) which produces a slightly negative pressure within the annulus, thereby precluding out-leakage and relieving the post-accident thermal expansion of air in the annulus (see Section 6.5.1).

(e) The air return fans which return air to the lower compartment (See Section 6.8).

Consideration is given to subcompartment differential pressure resulting from a design basis accident discussed in Sections 3.8.3.3, 6.2.1.3.9, and 6.2.1.3.4. If a design basis accident were to occur due to a pipe rupture in these relatively small volumes, the pressure would build up at a faster rate than in the containment, thus imposing a differential pressure across the wall of these structures.

Parameters affecting the assumed capability for post-accident pressure reduction are discussed in Section 6.2.1.3.3.

Three events that may result in an external pressure on the containment vessel have been considered:

(1) Rupture of a process pipe where it passes through the annulus.

(2) Inadvertent air return fan operation during normal operation.

(3) Inadvertent containment spray system initiation during normal operation.

The design of the guard pipe portion of hot penetrations is such that any process pipe leakage in the annulus is returned to the containment. All process piping which has potential for annulus pressurization upon rupture is routed through hot penetrations. Section 6.2.4 discusses hot penetrations.

Inadvertent air return fan operation during normal operation opens the ice condenser lower inlet doors, which in turn, results in sounding an alarm in the MCR. Sufficient

time exists for operator action to terminate fan operation prior to exceeding the containment design external pressure.

The logic and control circuits of the containment spray system are such that inadvertent containment spray would not take place with a single failure. The spray pump must start and the isolation valve must open before there can be any spray. In addition, the Watts Bar containment is so designed that even if an inadvertent spray occurs, containment integrity is preserved without the use of a vacuum relief.

The containment spray system is automatically actuated by a hi-hi containment pressure signal from the solid state protection system (SSPS). To prevent inadvertent automatic actuation, four comparator outputs, one from each protection set are processed through two coincidence gates. Both coincidence gates are required to have at least two high inputs before the output relays, which actuate the containment spray system, are energized. Separate output relays are provided for the pump start logic and discharge valve open logic. Additional protection is provided by an interlock between the pump and discharge valve, which requires the pump to be running before the discharge valve will automatically open.

Section 3.8.2 describes the structural design of the containment vessel. The containment vessel is designed to withstand a net external pressure of 2.0 psi. The containment vessel is designed to withstand the maximum expected net external pressure in accordance with ASME Boiler and Pressure and Vessel Code Section III, paragraph NE-7116.

6.2.1.2 Primary Containment System Design

The containment consists of a containment vessel and a separate Shield Building enclosing an annulus. The containment vessel is a freestanding, welded steel structure with a vertical cylinder, hemispherical dome, and a flat circular base. The Shield Building is a reinforced concrete structure similar in shape to the containment vessel. The design of these structures is described in Section 3.8.

The design internal pressure for the containment is 13.5 psig, and the design temperature is 250°F. The design basis leakage rate is 0.25 weight percent/24 hr. The design methods to assure integrity of the containment internal structures and sub-compartments from accident pressure pulses are described in Section 3.8.

6.2.1.3 Design Evaluation

6.2.1.3.1 Primary Containment Evaluation

(1) The leaktightness aspect of the secondary containment is discussed in Section 6.2.3. The primary containment's leaktightness does not depend on the operation of any continuous monitoring or compressor system. The leak testing of the primary containment and its isolation system is discussed in Section 6.2.6.

(2) The acceptance criteria for the leaktightness of the primary containment are such that at containment design pressure, there is a 25% margin between the acceptable maximum leakage rate and the maximum permissible leakage rate.

6.2.1.3.2 General Description of Containment Pressure Analysis

The time history of conditions within an ice condenser containment during a postulated loss of coolant accident can be divided into two periods for calculation purposes:

(1) The initial reactor coolant blowdown, which for the largest assumed pipe break occurs in approximately 10 seconds.

(2) The post blowdown phase of the accident which begins following the blowdown and extends several hours after the start of the accident.

During the first few seconds of the blowdown period of the reactor coolant system, containment conditions are characterized by rapid pressure and temperature transients. It is during this period that the peak transient pressures, differential pressures, temperature and blowdown loads occur. To calculate these transients a detailed spatial and short time increment analysis was necessary. This analysis was performed with the Transient Mass Distribution (TMD) computer code (Reference 4) with the calculation time of interest extending up to a few seconds following the accident initiation (See Section 6.2.1.3.4).

Physically, tests at the ice condenser Waltz Mill test facility have shown that the blowdown phase represents that period of time in which the lower compartment air and a portion of the ice condenser air are displaced and compressed into the upper compartment and the remainder of the ice condenser. The containment pressure at or near the end of blowdown is governed by this air compression process. The containment compression ratio calculation is described in Section 6.2.1.3.4.

Containment pressure during the post blowdown phase of the accident is calculated with the LOTIC code which models the containment structural heat sinks and containment safeguards systems.

6.2.1.3.3 Long-Term Containment Pressure Analysis

Early in the ice condenser development program it was recognized that there was a need for modeling of long-term ice condenser containment performance. It was realized that the model would have to have capabilities comparable to those of the dry containment (COCO) model. These capabilities would permit the model to be used to solve problems of containment design and optimize the containment and safeguards systems. This has been accomplished in the development of the LOTIC code[1].

The model of the containment consists of five distinct control volumes; the upper compartment, the lower compartment, the portion of the ice bed from which the ice has melted, the portion of the ice bed containing unmelted ice, and the dead ended compartments. The ice condenser control volume with unmelted ice is further

subdivided into six subcompartments to allow for maldistribution of break flow to the ice bed.

The conditions in these compartments are obtained as a function of time by the use of fundamental equations solved through numerical techniques. These equations are solved for three distinct phases in time. Each phase corresponds to a distinct physical characteristic of the problem. Each of these phases has a unique set of simplifying assumptions based on test results from the ice condenser test facility. These phases are the blowdown period, the depressurization period, and the long term.

The most significant simplification of the problem is the assumption that the total pressure in the containment is uniform. This assumption is justified by the fact that after the initial blowdown of the reactor coolant system, the remaining mass and energy released from this system into the containment are small and very slowly changing. The resulting flow rates between the control volumes will also be relatively small. These small flow rates then are unable to maintain significant pressure differences between the compartments.

In the control volumes, which are always assumed to be saturated, steam and air are assumed to be uniformly mixed and at the control volume temperature. The air is considered a perfect gas, and the thermodynamic properties of steam are taken from the ASME steam table.

For the purpose of calculation, the condensation of steam is assumed to take place in a condensing node located between the two control volumes in the ice storage compartment.

Containment Pressure Calculation

The following are the major input assumptions used in the LOTIC analysis for the pump suction pipe rupture case with the steam generators considered as an active heat source for the Watts Bar Nuclear Plant containment:

(1) Minimum safeguards are employed in all calculations, e.g., one of two spray pumps and one of two spray heat exchangers; one of two RHR pumps and one of two RHR heat exchangers providing flow to the core; one of two safety injection pumps and one of two centrifugal charging pumps; and one of two air return fans.

(2) 2.26×10^6 lbs. of ice initially in the ice condenser which is at 15°F.

(3) The blowdown, reflood, and post reflood mass and energy releases described in Section 6.2.1.3.6 were used.

(4) Blowdown and post-blowdown ice condenser drain temperatures of 190°F and 130°F are used[5].

(5) Nitrogen from the accumulators in the amount of 2955.68 lbs. included in the calculations.

(6) Essential raw cooling water temperature of 88°F is used on the spray heat exchanger and the component cooling heat exchanger. Note: The containment analysis was run at an ERCW temperature of 88°F although the containment spray, component cooling, and residual heat removal heat exchanger UA values are based on an ERCW temperature of 85°F to provide additional conservatism.

(7) The air return fan is effective 10 minutes after the transient is initiated. The actual air return fan initiation can take place in 9 $\pm$ 1 minutes, with initiation as early as 8 minutes not adversely affecting the analysis results.

(8) No maldistribution of steam flow to the ice bed is assumed.

(9) No ice condenser bypass is assumed. (This assumption depletes the ice in the shortest time and is thus conservative.)

(10) The initial conditions in the containment are a temperature of 100°F in the lower and dead-ended volumes, 80°F in the upper volume, and 15°F in the ice condenser. (Note: The 80°F temperature in the upper compartment is a reduction from the 85°F lower Technical Specification limit to account for the upper plenum volume of the ice condenser which is included in upper compartment volume for the analysis. The volume is adjusted to maximize air mass and the compression ratio.) All volumes are at a pressure of 0.3 psig and a 10-percent relative humidity, except the ice condenser which is at 100–percent relative humidity.

(11) A containment spray pump flow of 4000 gpm is used in the upper compartment. The analyzed diesel loading sequence for the containment sprays to energize and come up to full flow and head in 234 seconds is tabulated in Table 6.2.1-25.

(12) A residual spray (2000 gpm design, 1475 gpm analytical) is used. The residual heat removal pump and spray pump take suction from the sump during recirculation.

During the recirculation phase of a LOCA mass and energy release transient, a portion of the RHR pump flow can be diverted to the RHR sprays. The minimum time before RHR spray can be placed in service, as indicated in the Watts Bar Nuclear Plant System Description N3-72-4001, R19, Containment Heat Removal Spray System, is at least 1 hour after LOCA initiation to ensure adequate RHR flow to the core to remove the initial decay heat. Based on the preceding criteria, the RHR spray initiation was modeled at 4346.7 seconds into the LOCA containment response transient.

A discussion of the core cooling capability of the emergency core cooling system is given in Section 6.3.1 for this mode of operation.

(13) Containment structural heat sink data is found in Table 6.2.1-1. (Note: The dead-ended compartment structural heat sinks were conservatively neglected.)

(14) The operation of one containment spray heat exchanger (UA = 2.44 x 10^6 Btu/hr-°F incorporating a 10% tube plugging margin) for containment cooling and the operation of one RHR heat exchanger (UA = 1.496 x 10^6 Btu/hr-°F) for core cooling. The component cooling system heat exchanger UA was modeled at 5.778 x 10^6 Btu/hr-°F.

(15) The air return fan returns air at a rate of 40,000 cfm from the upper to lower compartment.

(16) An active sump volume of 51,000 ft^3 is used.

(17) The pump flowrates vs. time given in Table 6.2.1-2 were used in support of RWST draindown. (These flow values reflect ECCS pumps at runout against the design containment pressure, using the minimum composite pump curves shown in Figures 6.3-2, 6.3-3, and 6.3-4, which are degraded by 5% and bound what is achievable in the plant. Switchover times from injection to recirculation that are achievable in the plant for each ECCS pump were conservatively modeled in the analysis.)

(18) A power rating of 102% of licensed core power (3411 MWt) is assumed, but not explicitly modeled. [Decay heat is based on a reactor power of 3479.22 MWt (+2%) for mass and energy release computations. See Section 6.2.1.3.6.]

(19) Hydrogen gas was added to the containment in the amount of 25,230.2 Standard Cubic Feet (SCF) over 24 hours. Sources accounted for were radiolysis in the core and sump post-LOCA, corrosion of plant materials (aluminum, zinc, and painted surfaces found in containment), reaction of 1% of the Zirconium fuel rod cladding in the core, and hydrogen gas assumed to be dissolved in the reactor coolant system water. (This bounds tritium producing core designs.)

(20) The containment compartment volumes were based on the following: upper compartment 645,818 ft^3, lower compartment 221,074 ft^3, and dead-ended compartment 146,600 ft^3. (Note: These volumes represent TMD volumes. For Containment Integrity Analysis, the volumes are adjusted to maximize air mass and the compression ratio.)

(21) Subcooling of emergency core cooling (ECC) water from the RHR heat exchanger is assumed.

(22) Essential service water flow to the containment spray heat exchanger was modeled as 5,200 gpm. Also, the essential service water flow to the component cooling heat exchanger was modeled as 6,250 gpm.

(23) The decay heat curve used to calculate mass and energy releases after steam generator equilibration is the same as presented in the mass and energy release section of the FSAR (subsection 6.2.1.3.6).

With these assumptions, the heat removal capability of the containment is sufficient to absorb the energy releases and still keep the maximum calculated pressure well below design.

The following plots are provided:

Figure 6.2.1-1, Containment Pressure Versus Time

Figure 6.2.1-2a, Upper Compartment Temperature Versus Time

Figure 6.2.1-2b, Lower Compartment Temperature Versus Time

Figure 6.2.1-3, Active and Inactive Sump Temperature Transients

Figure 6.2.1-4, Melted Ice Mass Transient

Figure 6.2.1-4a, Comparison of Containment Pressure Versus Ice Melt

Tables 6.2.1-3 and 6.2.1-4 give energy accountings at various points in the transient.

As can be seen from Figure 6.2.1-1 the maximum calculated Containment pressure is 10.23 psig, occurring at approximately 7172.8 seconds.

Structural Heat Removal

Provision is made in the containment pressure analysis for heat storage in interior and exterior walls. Each wall is divided into a number of nodes. For each node, a conservation of energy equation expressed in finite difference forms accounts for transient conduction into and out of the node and temperature rise of the node. Table 6.2.1-1 is a summary of the containment structural heat sinks used in the analysis. The material property data used is found in Table 6.2.1-5.

The heat transfer coefficient to the containment structures is based primarily on the work of Tagami, Reference [21]. An explanation of the manner of application is given in Reference [3].

When applying the Tagami correlations a conservative limit was placed on the lower compartment stagnant heat transfer coefficients. They were limited to 72 Btu/hr-ft^2. This corresponds to a steam-air ratio of 1.4 according to the Tagami correlation. The imposition of this limitation is to restrict the use of the Tagami correlation within the test range of steam-air ratios where the correlation was derived.

6.2.1.3.4 Short-Term Blowdown Analysis

TMD Code - Short-Term Analysis

(1) Introduction

The basic performance of the ice condenser reactor containment system has been demonstrated for a wide range of conditions by the Waltz Mill Ice Condenser Test Program. These results have clearly shown the capability and reliability of the ice condenser concept to limit the Containment pressure rise subsequent to a hypothetical loss-of-coolant accident.

To supplement this experimental proof of performance, a mathematical model has been developed to simulate the ice condenser pressure transients. This model, encoded as computer program TMD (Transient Mass Distribution) Reference [4], provides a means for computing pressures, temperatures, heat transfer rates, and mass flow rates as a function of time and location throughout the containment. This model is used to compute pressure differences on various structures within the containment as well as the distribution of steam flow as the air is displaced from the lower compartment. Although the TMD code can calculate the entire blowdown transient, the peak pressure differences on various structures occur within the first few seconds of the transient.

(2) Analytical Models (No Entrainment)

The mathematical modeling in TMD is similar to that of the SATAN blowdown code in that the analytical solution is developed by considering the conservation equations of mass, momentum and energy and the equation of state, together with the control volume technique for simulating spatial variation. The governing equations for TMD are given in Reference [4].

The moisture entrainment modifications to the TMD code are discussed, in detail, in Reference [4]. These modifications comprise incorporating the additional entrainment effects into the momentum and energy equations.

As part of the review of the TMD code, additional effects are considered. Changes to the analytical model required for these studies are described in Reference [4].

These studies consist of:

(a) Spatial acceleration effects in ice bed
(b) Liquid entrainment in ice beds
(c) Upper limit on sonic velocity
(d) Variable ice bed loss coefficient
(e) Variable door response
(f) Wave propagation effects

Additionally the TMD code has been modified to account for fluid compressibility effects in the high Mach number subsonic flow regime.

Experimental Verification

The performance of the TMD code was verified against the 1/24 scale air tests and the 1968 Waltz Mill tests. For the 1/24 scale model the TMD code was utilized to calculate flow rates to compare against experimental results. The effect of increased nodalization was also evaluated. The Waltz Mill test comparisons involved a reexamination of test data. In conducting the reanalyses, representation of the 1968 Waltz Mill test was reviewed with regard to parameters such as loss coefficients and blowdown time history. The details of this information are given in Reference [4].

The Waltz Mill Ice Condenser Blowdown Test Facility was reactivated in 1973 to verify the ice condenser performance with the following redesigned plant hardware scaled to the test configuration:

(1) Perforated metal ice baskets and new design couplings.

(2) Lattice frames sized to provide the correct loss coefficient relative to plant design.

(3) Lower support beamed structure and turning vanes sized to provide the correct turning loss relative to the plant design.

(4) No ice baskets in the lower ice condenser plenum opposite the inlet doors.

The result of these tests was to confirm that conclusions derived from previous Waltz Mill tests have not been significantly changed by the redesign of plant hardware. The TMD Code has, as a result of the 1973 test series, been modified to match ice bed heat transfer performance. Detailed information on the 1973 Waltz Mill test series is found in Reference [5].

Application to Plant Design (General Description)

As described in Reference [4], the control volume technique is used to spatially represent the containment. The containment is divided into 50 elements to give a detailed representation of the local pressure transient on the containment shell and internal concrete structures. This division of the containment is similar for all ice condenser plants.

The Watts Bar plant containment has been divided into 50 elements or compartments as shown in Figures 6.2.1-5, 6.2.1-6, 6.2.1-7, and 6.2.1-8. The interconnections between containment elements in the TMD code is shown schematically in Figure 6.2.1-9. Flow resistance and inertia are lumped together in the flow paths connecting the elements shown. The division of the lower compartments into 6 volumes occurs at the points of greatest flow resistance, i.e., the four steam generators, pressurizer and refueling cavity.

Each of these lower compartment sections delivers flow through doors into a section behind the doors and below the ice bed. Each vertical section of the ice bed is, in turn, divided into three elements. The upper plenum between the top of the ice bed and the upper doors is represented by an element. Thus, a total of thirty elements (Elements 7 through 24 and 38 through 49 are used to simulate the ice condenser). The six elements at the top of the ice bed between bed and upper doors deliver to element number 25 the upper compartment. Note that cross flow in the ice bed is not accounted for in the analysis; this yields the most conservative results for the particular calculations described herein. The upper reactor cavity (Element 33) is connected to the lower compartment volumes and provides cross flow for pressure equalization of the lower compartments. The less active compartments, called dead-ended compartments (Elements 26 through 32 and 34 through 37) outside the crane wall are pressurized by ventilation openings through the crane wall into the fan compartments.

For each element in the TMD network the volume, initial pressure and initial temperature conditions are specified. The ice condenser elements have additional inputs of mass of ice, heat transfer area and condensate layer length. For each flow path between elements flow resistance is specified as a loss coefficient "K" or a fraction loss "L/D" or a combination of the two based on the flow area specified between elements. Friction factor, friction factor length and hydraulic diameter are specified for the friction loss.

Additionally, input for each flow path includes the area ratio (minimum area/maximum area) which is used to account for compressibility effects across flow path contractions. The code input for each flow path is the flow path length used in the momentum equation. The ice condenser loss coefficients have been based on the 1/4-scale tests representative of the current ice condenser geometry. The test loss coefficient was increased to include basket roughness effects and to include intermediate and top deck pressure losses. The loss coefficient is based on removal of door port flow restrictors.

To better represent short term transients effects, the opening characteristics of the lower, intermediate, and top deck ice condenser doors have been modeled in the TMD code. The containment geometric data for the elements and flow paths used in the TMD code is confirmed to agree with the actual design by TVA and Westinghouse. An initial containment pressure of 0.3 psig was assumed in the analysis. Initial containment pressure variation about the assumed 0.3 psig value has only a slight affect on the initial pressure peak and the compression ratio pressure peak. TMD input data is given in Tables 6.2.1-6 and 6.2.1-7.

The reactor coolant blowdown rates used in these cases are based on the SATAN analysis of a double-ended rupture of either a hot or a cold leg reactor coolant pipe utilizing a discharge coefficient of 1.0. The models and assumptions used to calculate the short-term mass and energy releases are described in Reference [9]. Tables 6.2.1-23 and 6.2.1-24 present the mass and energy release data used for this analysis.

A number of analyses have been performed to determine the various pressure transients resulting from hot and cold leg reactor coolant pipe breaks in any one of the

six lower compartment elements. The analyses were performed using the following assumptions and correlations:

(1) Flow was limited by the unaugmented critical flow correlation.

(2) The TMD variable volume door model, which accounts for changes in the volumes of TMD elements as the door opens, was implemented.

(3) The heat transfer calculation used was based on performance during the 1973-1974 Waltz Mill test series. A higher value of the ELJAC parameter has been used and an upper bound on calculated heat transfer coefficients has been imposed[5].

(4) One hundred percent moisture entrainment was assumed.

(5) Compressibility effects due to flow area contractions were modeled.

Figures 6.2.1-10 and 6.2.1-11 are representative of the typical upper and lower compartment pressure transients that result from a hypothetical double-ended rupture of a reactor coolant pipe for the worst possible location in the lower compartment of the containment; i.e., hot leg and cold leg breaks in Element 1.

Initial Pressures

Results of the analysis for the Watts Bar Plant are presented in Tables 6.2.1-8 through 6.2.1-11. The peak pressures and peak differential pressures resulting from hot and cold leg reactor coolant pipe breaks in each of the six lower compartment control volumes were calculated.

Table 6.2.1-8 presents the maximum calculated pressure peak for the lower compartment elements resulting from hot and cold leg double ended pipe breaks. Generally, the maximum peak pressure within a lower compartment element results when the pipe break occurs in that element. A cold leg break in Element 1 creates the highest pressure peak, also in Element 1, of 18.5 psig.

Table 6.2.1-9 presents the maximum calculated peak pressure in each of the ice condenser sections resulting from any pipe break location. The maximum peak pressure in each of the ice condenser sections is found in the lower plenum element of the section. The peak pressure was calculated to be 13.9 psig in Element 40.

Table 6.2.1-10 presents the maximum calculated differential pressures across the operating deck (divider barrier) between the lower compartment elements and the upper compartment. These values are approximately the same as the maximum calculated differential pressure across the lower crane wall between the lower compartment elements and the dead ended volumes surrounding the lower compartment. The peak differential pressure of 16.6 psi was calculated to be between Elements 1 and 25 for a cold leg break.

Table 6.2.1-11 presents the maximum calculated differential pressures across the upper crane wall between the upper ice condenser elements and the upper

compartment. The peak differential of 8.4 psi pressure was calculated to be between Element 7-8-9 and 25 for a hot leg pipe break.

Consideration is given to the calculation of subcompartment pressures (and pressure differentials) for cases other than the design basis double ended reactor coolant pipe rupture in the lower compartment. Discussion of these analyses is treated in Section 6.2.1.3.9.

Sensitivity Studies

A series of TMD runs for D. C. Cook investigated the sensitivity of peak pressures to variations in individual input parameters for the design basis blowdown rate and 100 percent entrainment. This analysis used a DEHL break in Element 6 of D. C. Cook. Table 6.2.1-12 presents the results of this sensitivity study.

As part of the short-term containment pressure analysis of ice condenser units, the pressure response to both DEHL and DECL breaks are routinely considered for each of the loop compartments.

Choked Flow Characteristics

The data in Figure 6.2.1-12 illustrate the behavior of mass flow rate as a function of upstream and downstream pressures, including the effects of flow choking. The upper plot shows mass flow rate as a function of upstream pressure for various assumed values of downstream pressure. For zero back pressure ($P_d = 0$), the entire curve represents choked flow conditions with the flow rate approximately proportional to upstream pressure P_u. For higher back pressure, the flow rates are lower until the upstream pressure is high enough to provide choked flow. After the increase in upstream pressure is sufficient to provide flow chokings further increases in upstream pressure cause increases in mass flow rate along the curve for $P_d = 0$. The key point in this illustration is that flow rate continues to increase with increasing upstream pressure, even after flow choking conditions have been reached. Thus, choking does not represent a threshold beyond which dramatically sharper increases in compartment pressures could be expected because of limitations on flow relief to adjacent compartments.

The phenomenon of flow choking is more frequently explained by assuming a fixed upstream pressure and examining the dependence of flow rate with respect to decreasing downstream pressure. This approach is illustrated for an assumed upstream pressure of 30 psia as shown in the upper plot with the results plotted vs. downstream pressure in the lower plot. For fixed upstream conditions, flow choking represents an upper limit flow rate beyond which further decreases in back pressure do not produce any increase in mass flow rate.

Compression Ratio Analysis

As blowdown continues following the initial pressure peak from a double-ended cold leg break, the pressure in the lower compartment again increases, reaching a peak at or before the end of blowdown. The pressure in the upper compartment continues to rise from beginning of blowdown and reaches a peak which is approximately equal to

the lower compartment pressure. After blowdown is complete, the steam in the lower compartment continues to flow through the doors into the ice bed compartment and is condensed.

The primary factor in producing this upper containment pressure peak and, therefore, in determining design pressure, is the displacement of air from the lower compartment into the upper containment. The ice condenser quite effectively performs its function of condensing virtually all the steam that enters the ice beds. Essentially, the only source of steam entering the upper containment is from leakage through the drain holes and other leakage around crack openings in hatches in the operating deck separating the lower and upper portions of the containment building.

A method of analysis of the compression peak pressure was developed based on the results of full-scale section tests. This method consists of the calculation of the air mass compression ratio, the polytropic exponent for the compression process, and the effect of steam bypass through the operating deck on this compression.

The compression peak pressure in the upper containment for the Watts Bar plant design is calculated to be 7.81 psig (for an initial air pressure of 0.3 psig). This compression pressure includes the effect of a pressure increase of 0.4 psi from steam bypass and also for the effects of the dead-ended volumes. The nitrogen partial pressure from the accumulators is not included since this nitrogen is not added to the containment until after the compression peak pressure has been reduced, which is after blowdown is completed. This nitrogen is considered in the analysis of pressure decay following blowdown as presented in the long term performance analysis using the LOTIC code. The following sections discuss the major parameters affecting the compression peak. Specifically they are: air compression, steam bypass, blowdown rate, and blowdown energy.

Air Compression Process Description

The volumes of the various containment compartments determine directly the air volume compression ratio. This is basically the ratio of the total active containment air volume to the compressed air volume during blowdown. During blowdown air is displaced from the lower compartment and compressed into the ice condenser beds and into the upper containment above the operating deck. It is this air compression process which primarily determines the peak in containment pressure, following the initial blowdown release. A peak compression pressure of 7.81 psig is based on the Watts Bar Plant design compartment volumes shown in Table 6.2.1-13.

Figure 6.2.1-13 shows the sensitivity of the compression peak pressure with different air compression ratios.

Methods of Calculation and Results

Full-Scale Section Tests

The actual Waltz Mill test compression ratios were found by performing air mass balances before the blowdown and at the time of the compression peak pressure,

using the results of three full-scale special section tests. These three tests were conducted with an energy input representative of the plant design.

In the calculation of the mass balance for the ice condenser, the compartment is divided into two sub-volumes; one volume representing the flow channels and one volume representing the ice baskets. The flow channel volume is further divided into four sub-volumes. The partial air pressure and mass in each sub-volume is found from thermocouple readings by assuming that the air is saturated with steam at the measured temperature. From these results, the average temperature of the air in the ice condenser compartment is found, and the volume occupied by the air at the total condenser pressure is found from the equation of state as follows:

$$V_{a2} = \frac{M_{a2} R_a T_{a2}}{P_2} \qquad (1)$$

where:

V_{a2} = Volume of ice condenser occupied by air (ft^3)

M_{a2} = Mass of air in ice condenser compartment (lb)

T_{a2} = Average temperature of air in ice condenser (°F)

P_2 = Total ice condenser pressure (lb/ft^2)

R_a = Ideal gas constant

The partial pressure and mass of air in the lower compartment are found by averaging the temperatures indicated by the thermocouples located in that compartment and assuming saturation conditions. For these three tests, it was found that the partial pressure, and hence the mass of air in the lower compartment, was zero at the time of the compression peak pressure.

The actual Waltz Mill test compression ratio is then found from the following:

$$C = \frac{V_1 + V_2 + V_3}{V_3 + V_{a2}} \qquad (2)$$

where:

V_1 = Lower compartment volume (ft^3)

V_2 = Ice condenser compartment volume (ft^3)

V_3 = Upper compartment volume (ft^3)

The polytropic exponent for these tests is then found from the measured compression pressure and the compression ratio calculated above. Also considered is the pressure increase that results from the leakage of steam through the deck into the upper compartment.

The compression peak pressure in the upper compartment for the tests or containment design is then given by:

$$P = P_o(C_r)^n + \Delta P_{deck} \qquad (3)$$

where:

P_o = Initial pressure (psia)

P = Compression peak pressure (psia)

C_r = Volume compression ratio

n = Polytropic exponent

ΔP_{deck} = Pressure increase caused by deck leakage (psi)

Using the method of calculation described above, the compression ratio is calculated for the three full-scale section tests. From the results of the air mass balances, it was found that air occupied 0.645 of the ice condenser compartment volume at the time of peak compression, or

$$V_{a2} = 0.645 \ V_2 \qquad (4)$$

The final compression volume includes the volume of the upper compartment as well as part of the volume of air in the ice condenser. The results of the full-scale section tests (Figure 6.2.1-14) show a variation in steam partial pressure from 100% near the bottom of the ice condenser to essentially zero near the top. The thermocouples and pressure detectors confirm that at the time when the compression peak pressure is reached steam occupies less than half of the volume of the ice condenser. The analytical model used in defining the containment pressure peak uses upper compartment volume plus 64.5% of the ice condenser air volumes as the final volume. This 64.5% value was determined from appropriate test results.

The calculated volume compression ratios are shown in Figure 6.2.1-15, along with the compression peak pressures for these tests. The compression peak pressure is determined from the measured pressure, after accounting for the deck leakage contribution. From the results shown in Figure 6.2.1-15, the polytropic exponent for these tests is found to be 1.13.

Plant Case

For the Watts Bar design, the volume compression ratio is calculated using Equation 2, modeling the upper plenum as part of the upper compartment, and Table 6.2.1-13 as:

$$C_r = \frac{1,077,012}{692,818 + [0.645 \text{ X } 110,520]} \qquad (5)$$

$$C_r = 1.4095$$

The peak compression pressure, based on an initial containment pressure of 15.0 psia (0.3 psig), is then given by Equation 3 as:

$$P_3 = 15.0\ (1.4095)^{1.13} + 0.4$$

$$P_3 = 22.507 \text{ psia or } 7.81 \text{ psig}$$

This peak compression pressure includes a pressure increase of 0.4 psi from steam bypass through the deck (see Section 6.2.1.3.5).

Sensitivity to Blowdown Energy

The sensitivity of the upper and lower compartment peak pressure versus blowdown rate as measured from the 1974 Waltz Mill Tests is shown in Figure 6.2.1-16. This figure shows the magnitude of the peak pressure versus the amount of energy released in terms of percentage of RCS energy release rate.

Percent energy blowdown rate was selected for the plot because energy flow rate more directly relates to volume flow rate and therefore pressure. There are two important effects to note from the peak upper compartment pressure versus blowdown rate: (1) the magnitude of the final peak pressure in the upper compartment is low (about 9 psig) for the plant design DECL blowdown rate; (2) even an increase in this rate up to 141% of the blowdown energy rate produces only a small increase in the magnitude of this peak pressure (about 1 psi). The major factor setting the peak pressure reached in the upper compartment is the compression of air displaced by steam from the lower compartment into the upper compartment. The lower compartment initial peak pressure shows a relatively low peak pressure of 12.9 psig for the design basis DECL blowdown rate, and even a substantial increase in blowdown energy rate (141% reference initial DECL) would cause an increase in initial peak pressure of only 3 psi. The peak pressure in the lower compartment is due mainly to flow resistance caused by displacement of air from the lower compartment into the upper compartment.

6.2.1.3.5 Effect of Steam Bypass

The sensitivity of the compression peak pressure to deck bypass is shown in Figure 6.2.1-17, which shows that an increase in deck bypass area of 50% would cause an increase of about 0.2 psi in final peak compression pressure. Also, it is important to note that the plant final peak compression pressure of 7.81 psig already includes a contribution of 0.4 psi from the plant deck bypass area of 5 ft^2.

This effect of deck leakage on upper containment pressure has been verified by a series of four special, full-scale section tests. These tests were all identical except different size deck leakage areas were used.

The results of these tests are given in Figure 6.2.1-18 which includes two curves of test results. Each curve shows the difference in upper compartment pressure between one test and another resulting from a difference in deck leakage area. One curve shows the increase in upper compartment pressure at the end of the boiler blowdown (after the compression peak pressure, at about 50 seconds in these tests), and the second curve shows the increase in upper compartment peak pressure (at about 10 seconds in these tests). It should be noted that the pressure at the end of the blowdown is less than the peak compression ratio pressure occurring at about 10 seconds for reference blowdown test.

The containment pressure increase due to deck leakage is directly proportional to the total amount of steam leakage into the upper compartment, and the amount of this steam leakage is, in turn, proportional to the amount of steam released from the boiler, less the inventory of steam remaining in the lower compartment. Notably, the increase in upper compartment compression peak pressure is substantially less than the upper compartment pressure increase at the end of blowdown, because the peak compression pressure occurs before the boiler has released all of its energy.

The calculated maximum pressure rise due to deck leakage (when all of the boiler energy release has occurred) is also shown in Figure 6.2.1-18. The slope of this curve is 0.095 psi/ft^2 for the tests and is equivalent to 0.107 psi/ft^2 for the plant design. The difference between the two coefficients is due to a small difference in upper compartment volume between the plant design and these tests.

As shown in Figure 6.2.1-18, the calculated curve for maximum pressure increase at the end of blowdown agrees closely with the measured curve at small deck leakage areas but deviates at larger leakage areas. This deviation apparently results from the condensation of upper compartment steam by the walls of the upper compartment and by the ice at the top of the condenser during the tests. Pressure would also be reduced by heat losses in a plant; however, for conservatism, no credit is taken for this effect. As demonstrated by tests, the compression peak pressure in the upper compartment occurs before the boiler releases all of its energy, and the measured increase in peak compression pressure due to increased deck leakage, is proportionately reduced. For the case of the plant design, the final peak compression pressure is conservatively assumed to occur when the reactor coolant system release is 75% of its total energy. This value is selected as a reference value, based on the results of a number of tests conducted with different blowdown rates and total energy releases, as shown in Figure 6.2.1-19. The actual deck leakage coefficient is therefore:

$$\frac{\Delta P_3}{A_{deck}} = 0.107 \times 0.75 = 0.080 \text{psi/ft}^2$$

The divider barrier including the enclosures over the pressurizer, steam generators and reactor vessel, is designed to provide a reasonably tight seal against leakage. Holes are purposely provided in the bottom of the refueling cavity to allow water from sprays in the upper compartment to drain to the sump in the lower compartment. Potential leakage paths exist at all the joints between the operating deck and the pump access hatches and reactor vessel enclosure slabs. The total of all deck leakage flow areas is approximately 5 ft^2. The effect of this potential leakage path is small and is found to be:

$$\Delta P_{deck} = 5 \times 0.080 = 0.4 \text{ psi}$$

In the event that the reactor coolant system break flow is so small that it would leak through these flow paths without developing sufficient differential pressure (1 lb/ft^2) to open the ice condenser doors, steam from the break would slowly pressurize the containment. The containment spray system has sufficient capacity to maintain pressure well below design for this case.

The Watts Bar Nuclear Plant and the Sequoyah Nuclear Plant are geometrically very similar. Some differences between the two plants, are the design pressure, spray flow rates, and a slight difference in thermal ratings. The fact that the spray flow rate is higher for the Sequoyah plant (4750 gpm versus 4000 gpm) is offset by Watts Bar's higher maximum internal pressure (15 psig versus 12 psig). The following discussion presents the deck leakage analysis performed for the Sequoyah plant. The purpose of this analysis is only to show the substantial margin which exists between the design deck leakage of 5 ft^2 and the tolerable deck leakage. The Sequoyah analysis which shows conservatism by a factor of 7, is more than sufficient for this purpose.

The method of analysis used to obtain the maximum allowable deck leakage capacity as a function of the primary system break size is as follows.

During the blowdown transient, steam and air flow through the ice condenser doors and also through the deck bypass area into the upper compartment. For the containment, this bypass area is composed of two parts, a known leakage area of 2.2 ft^2 with a geometric loss coefficient of 1.5 through the deck drainage holes location at the bottom of the refueling canal and an undefined deck leakage area with a conservatively small loss coefficient of 2.5.

A resistance network similar to that used to TMD is used to represent 6 lower compartment volumes each with a representative portion of the deck leakage, and the lower inlet door flow resistance and flow area is calculated for small breaks that would only partially open these doors. The coolant blowdown rate as a function of time is used with this flow network to calculate the differential pressures on the lower inlet doors and across the operating deck.

The resultant deck leakage rate and integrated steam leakage into the upper compartment is then calculated. The lower inlet doors are initially held shut by the cold head of air behind the doors (approximately one pound per square foot). The initial blowdown from a small break opens the doors and removes the cold head on the doors. With the door differential removed, the door position is slightly open. An

additional pressure differential of one pound per square foot is then sufficient to fully open the doors. The nominal door opening characteristics are based on test results.

One analysis conservatively assumed that flow through the postulated leakage paths is pure steam. During the actual blowdown transient, steam and air representative of the lower compartment mixture leak through the holes, thus less steam would enter the upper compartment. If flow were considered to be a mixture of liquid and vapor, the total leakage mass would increase, but the steam flow rate would decrease. The analysis also assumed that no condensing of the flow occurs due to structural heat sinks. The peak air compression in the upper compartment for the various break sizes is assumed with steam mass added to this value to obtain the total containment pressure. Air compression for the various break sizes is obtained from previous full-scale section tests conducted at Waltz Mill.

The allowable leakage area for the following reactor coolant system (RCS) break sizes was determined: DE, 0.6 DE, 3 ft^2, 10 inch diameter, 6 inch diameter, 2 inch diameter, and 0.5 inch diameter. The allowable deck leakage area for the DE break was based on the test results previously discussed. For break sizes of 3 ft^2 and 0.6 DE, a series of deck leakage sensitivity studies were made to establish the total steam leakage to the upper compartment over the blowdown transient. This steam was added to the peak compression air mass in the upper compartment to calculate a peak pressure. Air and steam were assumed to be in thermal equilibrium, with the air partial pressure increased over the air compression value to account for heating effects. For these breaks, sprays were neglected. Reduction in compression ratio by return of air to the lower compartment was conservatively neglected. The results of this analysis are shown in Table 6.2.1-14. This analysis is confirmed by Waltz Mill tests conducted with various deck leaks equivalent to over 50 ft^2 feet of deck leakage for the double-ended blowdown rate and is shown in Figure 6.2.1-20.

For breaks of 10 inch diameter and smaller, the effect of containment sprays was included. The method used calculates, for each time step of the blowdown, the amount of steam leaking into the upper compartment to obtain the steam mass in the upper compartment. This steam was mixed with the air in the upper compartment, assuming thermal equilibrium with air. The air partial pressure was increased to account for air heating effects. After sprays were initiated, the pressure was calculated based on the rate of accumulation of steam in the upper compartment.

This analysis was conducted for the 10 inch, 6 inch, and 2 inch break sizes, assuming one spray pump operated (4750 gpm at 100°F). As shown in Table 6.2.1-14, the 10 inch break is the limiting case for the given range of break sizes.

A second, more realistic, method was used to analyze the 10 inch, 6 inch, and 2 inch breaks. This analysis assumed a 30% air and 70% steam mix flowing through the deck leakage area. This is conservative considering the amount of air in the lower compartment during this portion of the transient. Operation of the deck fan increases the air content of the lower compartment, thus increasing the allowable deck leakage area. Based on the LOTIC code analysis, a structural heat removal rate of over 6000 Btu/sec from the upper compartment is indicated. Therefore, a steam condensation

rate of 6 lbs/sec was used for the upper compartment. The results indicate that with one spray pump operating and a deck leakage area of 50 ft^2, the peak containment pressure is below design pressure.

The 1/2 inch diameter break is not sufficient to open the ice condenser inlet doors. For this break, the upper compartment spray is sufficient to condense the break steam flow.

In conclusion, it is apparent that there is a substantial margin between the design deck leakage area of 5 ft^2 and that which can be tolerated without exceeding containment design pressure. A preoperational visual inspection is performed to ensure that the seals between the upper and lower containment have been properly installed.

6.2.1.3.6 Mass and Energy Release Data

Long-Term Loss-of-Coolant Accident Mass and Energy Releases

The evaluation model used for the long-term LOCA mass and energy release calculations is the March 1979 model described in Reference 20. This evaluation model has been reviewed and approved by the NRC.

The time history of conditions within an ice condenser containment during a postulated loss-of-coolant accident (LOCA) can be divided into two periods:

1. The initial reactor coolant blowdown, which for the largest assumed pipe break occurs within approximately 30 seconds.

2. The post blowdown phase of the accident which begins following the blowdown and extends several hours after the start of the accident.

LOCA Mass and Energy Release Phases

The containment system receives mass and energy releases following a postulated rupture in the RCS. These releases continue over a time period, the LOCA analysis calculational model is typically divided into four phases:

1. Blowdown - the period of time from accident initiation (when the reactor is at steady-state operation) to the time that the RCS and containment reach an equilibrium state at containment design pressure.

2. Refill - the period of time when the reactor vessel lower plenum is being filled by accumulator and Emergency Core Cooling System (ECCS) water. At the end of blowdown, a large amount of water remains in the cold legs, downcomer, and lower plenum. To conservatively consider the refill period for the purpose of containment mass and energy releases, it is assumed that this water is instantaneously transferred to the lower plenum along with sufficient accumulator water to completely fill the lower plenum. This allows an uninterrupted release of mass and energy to containment. Therefore, the refill period is conservatively neglected in the mass and energy release calculation.

3. Reflood - begins when the water from the reactor vessel lower plenum enters the core and ends when the core is completely quenched.

4. Post-reflood (Froth) - describes the period following the reflood transient. For the pump suction break, a two-phase mixture exits the core, passes through the hot legs, and is superheated in the steam generators prior to release to containment. After the broken loop steam generator cools, the break flow becomes two phase.

Break Size and Location

Generic studies have been performed with respect to the effect of postulated break size on the LOCA mass and energy releases. The double-ended guillotine break has been found to be limiting due to larger mass flow rates during the blowdown phase of the transient. During the reflood and froth phases, the break size has little effect on the releases.

Three distinct locations in the RCS loop can be postulated for pipe rupture:

1. Hot leg (between vessel and steam generator)

2. Cold leg (between pump and vessel)

3. Pump suction (between steam generator and pump)

For long-term considerations the break location analyzed is the pump suction double-ended guillotine (DEPSG) (10.46 ft^2). The pump suction break mass and energy releases have been calculated for the blowdown, reflood, and post-reflood phases of the LOCA for each case analyzed. The following paragraphs provide a discussion on each break location.

The hot-leg double-ended guillotine has been shown in previous studies to result in the highest blowdown mass and energy release rates. Although the core flooding rate would be the highest for this break location, the amount of energy released from the steam generator secondary is minimal because the majority of the fluid that exits the core bypasses the steam generators, venting directly to containment. As a result, the reflood mass and energy releases are reduced significantly as compared to either the pump suction or cold-leg break locations, where the core exit mixture must pass through the steam generators before venting through the break.

For the hot-leg break, generic studies have confirmed that there is no reflood peak (that is, from the end of the blowdown period the containment pressure would continually decrease). The mass and energy releases for the hot-leg break have not been included in the scope of this containment integrity analysis because, for the hot-leg break, only the blowdown phase of the transient is of any significance. Since there are no reflood or post-reflood phases to consider, the limiting peak pressure calculated would be the compression peak pressure and not the peak pressure following ice bed melt-out.

The cold-leg break location has been found in previous studies to be much less limiting in terms of the overall containment energy releases. The cold-leg blowdown is faster

than that of the pump suction break, and more mass is released into the containment. However, the core heat transfer is greatly reduced, and this results in a considerably lower energy release into containment. Studies have determined that the blowdown transient for the cold leg is less limiting than that tor the pump suction break. During cold-leg reflood, the flooding rate is greatly reduced and the energy release rate into the containment is reduced. Therefore, the cold-leg break is not included in the scope of this analysis.

The pump suction break combines the effects of the relatively high core flooding rate, as in the hot-leg break, and the addition of the stored energy in the steam generators. As a result, the pump suction break yields the highest energy flow rates during the post-blowdown period by including all of the available energy of the RCS in calculating the releases to containment. This break has been determined to be the limiting break for all ice condenser plants.

In summary, the analysis of the limiting break location for an ice condenser containment has been performed. The DEPSG break has historically been considered to be the limiting break location, by virtue of its consideration of all energy sources in the RCS. This break location provides a mechanism for the release of the available energy in the RCS, including both the broken and intact loop steam generators. Inclusion of these energy sources conservatively results in the maximum amount of ice being melted in the event of a LOCA.

Application of Single-Failure Criteria

An analysis of the effects of the single-failure criteria has been performed on the mass and energy release rates for the pump suction (DEPSG) break. An inherent assumption in the generation of the mass and energy release is that offsite power is lost. This results in the actuation of the emergency diesel generators, required to power the Safety Injection System. This is not an issue for the blowdown period, which is limited by the compression peak pressure.

The limiting minimum safety injection case has been analyzed for the effects of a single failure. In the case of minimum safeguards, the single failure postulated to occur is the loss of an emergency diesel generator. This results in the loss of one pumped safety injection train, that is, ECCS pumps and heat exchangers.

Basis of the Analysis

I. Significant Modeling Assumptions

The following summarized assumptions were employed to ensure that the mass and energy releases were conservatively calculated, thereby maximizing energy release to containment:

1. Maximum expected operating temperature of the RCS at 100-percent full-power conditions: (619.1°F)

2. An allowance in temperature for instrument error and dead band was assumed on the vessel/core inlet temperature (+7.0°F)

3. Margin in volume of 3 percent (which is composed of a 1.6-percent allowance for thermal expansion, and a 1.4-percent allowance for uncertainty)

4. Core rated power of 3,411 MWt

5. Allowance for calorimetric error (+2.0 percent of power)

6. Conservative coefficient of heat transfer (that is, steam generator primary/secondary heat transfer and RCS metal heat transfer).

7. Core-stored energy based on the time in life for maximum fuel densification. The assumptions used to calculate the fuel temperatures for the core-stored energy calculation account for appropriate uncertainties associated with the models in the PAD code (such as calibration of the thermal model, pellet densification model, or clad creep model). In addition, the fuel temperatures for the core-stored energy calculation account for appropriate uncertainties associated with manufacturing tolerances (such as pellet as-built density). The total uncertainty for the fuel temperature calculation is a statistical combination of these effects and is dependent upon fuel type, power level, and burnup.

8. An allowance for RCS initial pressure uncertainty (+70 psi)

9. A maximum containment backpressure equal to design pressure

10. A provision for modeling steam flow in the secondary side through the steam generator turbine stop valve was conservatively addressed only at the start of the event. A turbine stop valve isolation time equal to 0.0 seconds was used.

11. As noted in Section 2.4 of Reference 20, the option to provide more specific modeling pertaining to decay heat has been exercised to specifically reflect the Watts Bar Nuclear Plant Unit 2 core heat generation, while retaining the two sigma uncertainty to assure conservatism.

12. Steam generator tube plugging leveling (0-percent uniform)

    a. Maximizes reactor coolant volume and fluid release

    b. Maximizes heat transfer area across the steam generators tubes

    c. Reduces coolant loop resistance, which reduces the Δp upstream of the break and increases break flow

II. Initial Conditions

Table 6.2.1-15 presents the System Parameters Initial Conditions utilized.

Thus, based on the previously noted conditions and assumptions, a bounding analysis of Watts Bar Nuclear Plant Unit 2 is made for the release of mass and energy from the RCS in the event of a LOCA.

Blowdown Mass and Energy Release Data

A version of the SATAN-VI code is used for computing the blowdown transient, which is the code used for the ECCS calculation in Reference 22. The SATAN-VI code calculates blowdown (the first portion of the thermal-hydraulic transient following break initiation), including pressure, enthalpy, density, mass, energy flow rates, and energy transfer between primary and secondary systems as a function of time.

The code utilizes the control volume (element) approach with the capability for modeling a large variety of thermal fluid system configurations. The fluid properties are considered uniform and thermodynamic equilibrium is assumed in each element. A point kinetics model is used with weighted feedback effects. The major feedback effects include moderator density, moderator temperature, and Doppler broadening. A critical flow calculation for subcooled (modified Zaloudek), two-phase (Moody), or superheated break flow is incorporated into the analysis. The methodology for the use of this model is described in Reference 20.

Table 6.2.1-16 presents the calculated LOCA mass and energy releases for the blowdown phase of the DEPSG break. For the pump suction breaks, break path 1 in the mass and energy release tables refers to the mass and energy exiting from the steam generator side of the break; break path 2 refers to the mass and energy exiting from the pump side of the break.

Reflood Mass and Energy Release Data

The WREFLOOD code used for computing the reflood transient is a modified version of that used in the 1981 ECCS evaluation model, Reference 22. The WREFLOOD code addresses the portion of the LOCA transient where the core reflooding phase occurs after the primary coolant system has depressurized (blowdown) due to the loss of water through the break and when water supplied by the emergency core cooling refills the reactor vessel and provides cooling to the core. The most important feature is the steam/water mixing model.

The WREFLOOD code consists of two basic hydraulic models - one for the contents of the reactor vessel and one for the coolant loops. The two models are coupled through the interchange of the boundary conditions applied at the vessel outlet nozzles and at the top of the downcomer. Additional transient phenomena, such as pumped safety injection and accumulators, reactor coolant pump performance, and steam generator release are included as auxiliary equations that interact with the basic models as required. The WREFLOOD code permits the capability to calculate variations (during the core reflooding transient) of basic parameters such as core

flooding rate, core and downcomer water levels, fluid thermodynamic conditions (pressure, enthalpy, density) throughout the primary system, and mass flow rates through the primary system. The code permits hydraulic modeling of the two flow paths available for discharging steam and entrained water from the core to the break; that is, the path through the broken loop and the path through the unbroken loops.

A complete thermal equilibrium mixing condition for the steam and emergency core cooling injection water during the reflood phase has been assumed for each loop receiving ECCS water. This is consistent with the usage and application of the Reference 4 mass and energy release evaluation model. Even though the Reference 20 model credits steam/mixing only in the intact loop and not in the broken loop, justification, applicability, and NRC approval for using the mixing model in the broken loop has been documented (Reference 23). This assumption is justified and supported by test data, and is summarized as follows.

The model assumes a complete mixing condition (that is, thermal equilibrium) for the steam/water interaction. The complete mixing process is made up of two distinct physical processes. The first is a two-phase interaction with condensation of steam by cold ECCS water. The second is a single-phase mixing of condensate and ECCS water. Since the steam release is the most important influence to the containment pressure transient, the steam condensation part of the mixing process is the only part that need be considered. (Any spillage directly heats only the sump.)

The most applicable steam/water mixing test data has been reviewed for validation of the containment integrity reflood steam/water mixing model. This data is generated in 1/3 scale tests (Reference 24), which are the largest scale data available and thus most clearly simulate the flow regimes and gravitational effects that would occur in a pressurized water reactor (PWR). These tests were designed specifically to study the steam/water interaction for PWR reflood conditions.

From the entire series of 1/3 scale tests, one group corresponds almost directly to containment integrity reflood conditions. The injection flow rates from this group cover all phases and mixing conditions calculated during the reflood transient. The data from these tests were reviewed and discussed in detail in Reference 20. For all of these tests, the data clearly indicate the occurrence of very effective mixing with rapid steam condensation. The mixing model used in the containment integrity reflood calculation is therefore wholly supported by the 1/3 scale steam/water mixing data.

Additionally, the following justification is also noted. The post-blowdown limiting break for the containment integrity peak pressure analysis is the DEPSG break. For this break, there are two flow paths available in the RCS by which mass and energy may be released to containment. One is through the outlet of the steam generator, the other is via reverse flow through the reactor coolant pump. Steam that is not condensed by ECCS injection in the intact RCS loops passes around the downcomer and through the broken loop cold leg and pump in venting to containment. This steam also encounters ECCS injection water as it passes through the broken loop cold leg, complete mixing occurs and a portion of it is condensed. It is this portion of steam, which is condensed, for which this analysis takes credit. This assumption is justified based upon the

postulated break location and the actual physical presence of the ECCS injection nozzle. A description of the test and test results is contained in References 20 and 24.

Table 6.2.1-17 presents the calculated mass and energy release for the reflood phase of the pump suction double ended rupture with minimum safety injection.

The transients of the principal parameters during reflood are given in Table 6.2.1-18.

Post-Reflood Mass and Energy Release Data

The FROTH code (Reference 9) is used for computing the post-reflood transient. The FROTH code is used for the steam generator heat addition calculation from the broken and intact loop steam generators.

The FROTH code calculates the heat release rates resulting from a two-phase mixture level present in the steam generator tubes. The mass and energy releases that occur during this phase are typically superheated due to the depressurization and equilibration of the broken loop and intact loop steam generators. During this phase of the transient, the RCS has equilibrated with the containment pressure, but the steam generators contain a secondary inventory at an enthalpy that is much higher than the primary side. Therefore, a significant amount of reverse heat transfer occurs. Steam is produced in the core due to core decay heat. For a pump suction break, a two-phase fluid exits the core, flows through the hot legs, and becomes superheated as it passes through the steam generator. Once the broken loop cools, the break flow becomes two-phase. The methodology for the use of this model is described in Reference 20.

The EPITOME code continues the FROTH post-reflood portion of the transient from the time at which the secondary side equilibrates to containment design pressure to the end of the transient. It also compiles a summary of data on the entire transient, including formal instantaneous mass and energy release tables and mass and energy balance tables with data at critical times.

After steam generator depressurization/equilibration, the mass and energy release available to containment is generated directly from core boiloff/decay heat. At this time the flow split is assumed to be 100%.

Table 6.2.1-19 presents the two-phase post-reflood (froth) mass and energy release data for the pump suction double-ended break case.

Steam Generator Equilibration and Depressurization

Steam generator equilibration and depressurization is the process by which secondary side energy is removed from the steam generators in stages. The FROTH computer code calculates the heat removal from the secondary mass until the secondary temperature is saturated at the containment design pressure. After the FROTH calculations, steam generator secondary energy is removed until the steam generator reaches T_{sat} at the user-specified intermediate equilibration pressure, when the secondary pressure is assumed to reach the actual containment pressure. The heat

removal of the broken loop steam generator and intact loop steam generators are calculated separately.

During the FROTH calculations, steam generator heat removal rates are calculated using the secondary side temperature, primary side temperature, and a secondary side heat transfer coefficient determined using a modified McAdam's correlation (Reference 26). Steam generator energy is removed during the FROTH transient until the secondary side temperature reaches saturation temperature at the containment design pressure. The constant heat removal rate used is based on the final heat removal rate calculated by FROTH. The remaining steam generator energy available to be released is determined by calculating the difference in secondary energy available at the containment design pressure and that at the (lower) user-specified equilibration pressure, assuming saturated conditions. This energy is then divided by the energy removal rate, resulting in an equilibration time.

Decay Heat Model

ANS Standard 5.1 (Reference 25) was used in the LOCA mass and energy release model for Watts Bar Unit 1 for the determination of decay heat energy. This standard was balloted by the Nuclear Power Plant Standards Committee (NUPPSCO) in October 1978 and subsequently approved. The official standard (Reference 25) was issued in August 1979.

The primary assumptions that make this calculation specific for the Watts Bar Nuclear Plant Unit 2 are the enrichment factor, minimum/maximum new fuel loading per cycle, and a conservative end of cycle core average burnup. A conservative lower bound for enrichment of 3 percent was used. Table 6.2.1-20 lists the decay heat curve used.

Significant assumptions in the generation of the decay heat curve are the following:

1. Decay heat sources considered are fission product decay and heavy element decay of U-239 and N_p-239.

2. Decay heat power from the following fissioning isotopes are included; U-238, U-235, and Pu-239.

3. Fission rate is constant over the operating history of maximum power level.

4. The factor accounting for neutron capture in fission products has been taken from Equation 11, of Reference 25 (up to 10,000 seconds) and Table 10 of Reference 25 (beyond 10,000 seconds).

5. The fuel has been assumed to be at full power for 1,096 days.

6. The number of atoms of U-239 produced per second has been assumed to be equal to 70 percent of the fission rate.

7. The total recoverable energy associated with one fission has been assumed to be 200 MeV/fission.

8. Two sigma uncertainty (two times the standard deviation) has been applied to the fission product decay.

Short-Term Mass and Energy Releases

The short-term mass and energy release models and assumptions are described in Reference [9]. The LOCA short-term mass and energy release data used to perform the containment analysis given in Sections 6.2.1.3.4 and 6.2.1.3.9 are listed below:

Section	Break Size and Location	Table
6.2.1.3.4	Double-Ended Cold Leg Guillotine Break Outside the Biological Shield	6.2.1-23
6.2.1.3.4	Double-Ended Hot Leg Guillotine Break Outside the Biological Shield	6.2.1-24
6.2.1.3.9	Double-Ended Pressurizer Spray Line Break	6.2.1-28
6.2.1.3.9	127 in^2 Cold Leg Break at the Reactor Vessel	6.2.1-30

6.2.1.3.7 Accident Chronology

For a double-ended pump suction loss-of-coolant accident, the major events and their time of occurrence are shown in Table 6.2.1-25 for the minimum safeguards case.

6.2.1.3.8 Mass and Energy Balance Tables

Sources of Mass and Energy

The sources of mass considered in the LOCA mass and energy release analysis are given in Table 6.2.1-26a. These sources are the RCS, accumulators, and pumped safety injection.

The energy inventories considered in the LOCA mass and energy release analysis are given in Table 6.2.1-26b. The energy sources include:

- RCS water
- Accumulator water
- Pumped injection water
- Decay heat
- Core-stored energy
- RCS metal - Primary metal (includes steam generator tubes)

- Steam generator metal (includes transition cone, shell, wrapper, and other internals)
- Steam generator secondary energy (includes fluid mass and steam mass)
- Secondary transfer of energy (feedwater into and steam out of the steam generator secondary)

It should be noted that the inconsistency in the energy balance tables from the end of reflood to the time of intact loop steam generator depressurization/equilibration ("Total Available" data versus "Total Accountable") resulted from the exclusion of the reactor upper head in the analysis following blowdown. It has been concluded that the results are more conservative when the upper head is neglected. This does not affect the instantaneous mass and energy releases or the integrated values, but causes an increase in the total accountable energy within the energy balance table.

The mass and energy inventories are presented at the following times, as appropriate:

- Time zero (initial conditions)
- End of blowdown time
- End of refill time
- End of reflood time
- Time of broken loop steam generator equilibration to pressure setpoint
- Time of intact loop steam generator equilibration to pressure setpoint

The chronology of events for the DEPS case is shown in Table 6.2.1-25.

The energy release from the zirc-water reaction is considered as part of the WCAP-1 0325-P-A (Reference 20) methodology. Based on the way that the energy in the fuel is conservatively released to the vessel fluid, the fuel cladding temperature does not increase to the point where the zirc-water reaction is significant. This is in contrast to the 10 CFR 50.46 analyses, which are biased to calculate high fuel rod cladding temperatures and therefore a non-significant zirc-water reaction.

For the LOCA mass and energy calculation, the energy created by the zirc-water reaction value is small and is not explicitly provided in the energy balance tables. The energy that is determined is part of the mass and energy releases and is therefore already included in the LOCA mass and energy release.

The methods and assumptions used to release various energy sources are given in Reference 20.

The consideration of the various energy sources in the mass and energy release analysis provides assurance that all available sources of energy have been included

in this analysis. Therefore, the review guidelines presented in Standard Review Plan Section 6.2.1.3 have been satisfied.

6.2.1.3.9 Containment Pressure Differentials

Consideration is given in the design of the containment internal structures to localized pressure pulses that could occur following a loss-of-coolant accident or a main steam line break. If either type of pipe rupture were to occur in these relatively small volumes, the pressure would build up at a rate faster than the overall containment, thus imposing a differential pressure across the walls of the structures.

These subcompartments include the steam generator enclosure, pressurizer enclosure, and upper and lower reactor cavity. Each compartment is designed for the largest blowdown flow resulting from the severance of the largest connecting pipe within the enclosure or the blowdown flow into the enclosure from a break in an adjacent region.

The following paragraphs summarize the design basis calculations:

Steam Generator Enclosure

The worst break possible in the steam generator enclosure is a double-ended rupture of the steamline pipe at no load conditions. Based on an investigation of postulated break locations, the rupture is assumed to occur at the point where the steamline exits the steam generator. The blowdown for this break is given in Table 6.2.1-27a. The TMD computer code (Reference 4) using the compressibility factor and assuming unaugmented critical flow is used to calculate the short-term pressure transient. The nodalization of the steam generator enclosure where the break occurs is shown in Figure 6.2.1-81. Node 51 is the break element and has a flow path to the adjacent steam generator enclosure which is a mirror image of the enclosure where the break occurs. Both enclosures are nodalized in the same manner; their nodal network is shown in Figure 6.2.1-82 and their input data is given in Tables 6.2.1-27b and 6.2.1-27c. This input data assumes that the insulation remains intact. The loss coefficients were computed using Reference [12]. The maximum number of nodes used is based on the geometry of the system. The steam generator compartment is essentially symmetrical with no major obstructions to flow which would introduce asymmetric pressures. In addition, the flow path to the adjacent steam generator is at the top of the enclosure. Therefore, a significant differential pressure will not occur across the steam generator vessel. The balance of plant data is similar to that presented in Section 6.2.1.3.4.

The peak pressure differentials across the steam generator enclosure, the steam generator vessel, and the steam generator separator wall are given in Table 6.2.1-27d. Figure 6.2.1-83 shows the differential pressure transient between the break element and the upper compartment (Node 25). Figures 6.2.1-84 and 6.2.1-85 illustrate the differential pressure transient across the steam generator vessel. As Figures 6.2.1-84 and 6.2.1-85 show, the pressure differentials across the vessel are low and are due solely to inertial effects. The pressure vs time curve for the break element is given in

Figure 6.2.1-86 and for the upper compartment (Node 25) in Figure 6.2.1-86a (Refer to Section 3.8.3.4.8 for steam generator compartment structural design description).

Pressurizer Enclosure

The worst break possible in the pressurizer enclosure is a double-ended rupture of the six-inch spray line. The rupture is assumed to occur at the top of the enclosure. The blowdown for this break is given in Table 6.2.1-28. The TMD computer code using the compressibility factor and assuming unaugmented critical flow is used to calculate the short-term pressure transient. The nodalization of the enclosure is shown in Figure 6.2.1-87. Node 51 is the break element. The input data is given in Table 6.2.1-29a. This input data assumes that the insulation remains intact. The loss coefficients were computed using Reference [12]. The maximum number of nodes used was based on the geometry of the system. The pressurizer compartment is essentially symmetrical with no major obstructions to flow which would introduce asymmetric pressures on the pressurizer vessel. The balance of plant data is similar to that presented in Section 6.2.1.3.4.

The peak pressure differentials across the pressurizer enclosure's walls, and across the pressurizer vessel are given in Table 6.2.1-29b. Figure 6.2.1-88 shows the pressure transient between the break element and the upper compartment (Node 25). As Figures 6.2.1-89 through 6.2.1-91 show, the significant pressure differential across the vessel are low, occur early, and are due solely to inertial effects. The pressure vs. time curve for the break element is given in Figure 6.2.1-92 (Refer to Section 3.8.3.4.9 for pressurizer compartment structural design description).

Reactor Cavity

The TMD computer code with the unaugmented homogeneous critical flow correlation and the isentropic compressible subsonic flow correlation was used to calculate pressure transients in the reactor cavity region.

Nodalization sensitivity studies were performed before the analysis was begun. The total number of nodes used varied from 6 to 68. In the 6-element model, no detail of the reactor vessel annulus was involved, and for that reason the model was discarded. Subsequent model changes primarily involved greater detail in the reactor vessel annulus. First, the annulus was divided into two vertical and eight circumferential regions. Next, some additional detail was added to the region of the broken nozzle. The next changes were effected by increasing the model to three vertical and eight circumferential regions. The total integrated pressure in the reactor cavity changed only slightly because of the last change. The next change, to 68 elements, produced the model shown with detailed modeling around the nozzle sustaining the break. The additional elements from 48 to 52 are external to the reactor cavity (ice condenser). Additional elements were added to account for all real area changes in the immediate vicinity of the break (i.e., Elements 53 and 54 were added to model the broken loop pipe annulus and the broken loop inspection port, respectively).

The nodal scheme around the reactor vessel produces a very accurate post accident pressure profile because of its design. Element 3 is a small element inside the primary

shield. It would contain internal flow losses due to turning and thus contain a pressure gradient if it were made larger. The four elements numbered 33, 34, 45, and 46 are made small to minimize internal pressure variation, and the elements farther from the break are made larger because pressure gradients are low in those regions.

Figure 6.2.1-27 illustrates the positions of some of the compartments. Figure 6.2.1-28 shows the flow path connections for the 68 element model. Figure 6.2.1-29 illustrates the general configuration of the reactor vessel annulus nodalization. In the model, the lower containment is divided into four loop compartments (21 to 24). The upper containment is represented by Compartment 32. The ice condenser is modeled as five elements (48 to 52), neglecting any flow distribution effects. The break simultaneously occurs in Elements 1 and 25, immediately surrounding the nozzle. The corresponding broken loop pipe annulus is represented by Element 53. The lower reactor cavity is modeled by Element 2, the upper reactor cavity by Element 47, and the remainder of the elements, as shown in Figure 6.2.1-29, model the reactor vessel annulus. Compartments 15, 42, and 16 are really adjoining Compartments 17, 43, and 18, respectively, and Compartment 13 is on the opposite side of the vessel from the assumed break. Element 54 represents the inspection port volume above the break.

A break limiting restraint restricts the break size. A 127 in^2 cold leg break is the limiting case break for the reactor cavity analysis. The mass and energy release rates are presented in Table 6.2.1-30. Tables 6.2.1-31 and 6.2.1-32 provide the volumes, flow paths, lengths, diameters, flow areas, resistance factors, and area ratios for the elements and their connections.

The inspection port plugs were assumed to be removed at the start of the accident. All insulation is assumed in place and uncrushed during the entire transient except for the insulation between the break and the reactor vessel annulus. This insulation was conservatively assumed to crush to zero thickness.

The loss coefficient (k) values were determined by changes in flow area and by turns the flow makes in traveling from the centroid of the upstream node to the centroid of the downstream node. The k and f factors for each path were determined using methods from such references as "Flow of Fluids through Valves, Fittings, and Pipes" by the crane company and "Chemical Engineering" by J. M. Coulson and J. A. Richardson.

Figures 6.2.1-30 through 6.2.1-68 show representative pressure transients for the break compartments, the upper and lower reactor cavities, the inspection port volume and pipe annulus near the break, the upper containment and the reactor vessel annulus. These plots demonstrate that the pressure gradient is steep near the break location and is very gradual farther away from the break. This indicates that the model must be very detailed close to the break location, but less detail is required with increasing distance (Refer to Section 3.8.3.5.3 for reactor cavity structural design description).

6.2.1.3.10 Steam Line Break Inside Containment

Pipe Break Blowdowns - Spectra and Assumptions

A series of steam line breaks was analyzed to determine the most severe break condition for containment temperature and pressure response. The following assumptions were used in these analyses.

(1) The following break types were evaluated.

(a) Double-ended 4.6 ft^2 ruptures occurring at the nozzle on one steam generator. Steam line flow restrictors in the steam generators limit the effective break area of a full double-ended pipe rupture to a maximum of 1.4 ft^2 per steam generator.

(b) The largest split break which will not generate the low steamline pressure signal for steamline isolation.

(c) Small split breaks of 0.6, 0.35, and 0.1 ft^2.

(2) Steam line isolation signals and feedwater line isolation signals are generated by either a low steam line pressure signal, high or high-high containment pressure signal, or high steam line pressure rate signal. An allowance of 8 seconds is assumed for steam line isolation including generation, processing, and delay of the isolation signal and valve closure. An allowance of 8 seconds is assumed for feedwater line isolation including generation, processing, and delay of the isolation signal and valve closure.

(3) Failure of a diesel generator is assumed in the containment model for all cases. This results in the loss of one containment safeguards train resulting in minimum heat removal capability. There is no diesel failure associated with the steam line break model.

(4) Blowdown from the broken steam line is assumed to be dry saturated steam.

(5) Plant power levels of 100.6% and zero of nominal full-load power for DER, and split pipe ruptures at 30% of nominal full-load power.

(6) Failure of a main steamline isolation valve (MSIV), failure of a feedwater isolation valve (FIV) or control valve (FCV), failure of auxiliary feedwater runout control protection, and failure of a safety injection train are considered.

(7) The auxiliary feedwater system is manually realigned by the operator after 10 minutes to terminate AFW to the faulted steam generator.

(8) For the full double-ended ruptures, the main feedwater flow to the steam generator with the broken steam line was calculated based on an initial flow of 100% of nominal full power flow and a conservatively rapid steam generator depressurization. The peak value of this flow occurring just prior to isolation is 328% of nominal.

Break Flow Calculations

(1) Steam Generator Blowdown

Break flows and enthalpies from the steam generators are calculated using the Westinghouse LOFTRAN code[14]. Blowdown mass and energy release are determined using the LOFTRAN code which includes effects of core power generation, main and auxiliary feedwater additions, engineered safeguards systems, reactor coolant system thick metal heat storage, and reverse steam generator heat transfer.

(2) Steam Plant Piping Blowdown

The contribution to the mass and energy releases from the secondary plant steam piping is included with the mass and energy release rates presented in Table 6.2.1-39. For all ruptures, the steam piping volume blowdown begins at the time of the break and continues at a uniform rate until the entire piping inventory is released. The flowrate is determined using the Moody correlation, the pipe cross-sectional area, and the initial steam pressure. Following the piping blowdown, reverse flow from the intact steam generators continues to simulate the reverse steam generator flow until steam line isolation.

Single Failure Effects

(1) Failure of the main steam isolation valve (located outside of containment) in the steam line with the break allows steam from all four main steam lines (downstream of the other main steam isolation valves which close) to flow out the break. The analysis accounts for this effect by including an allowance for additional mass and energy released through the break due to the volume of steam contained in the main steam lines. No additional steam is released through the break if the postulated single failure is a main steam isolation valve in another steam line not closing. In this case, the main steam isolation valve in the broken steam line does close and there is no backflow from the downstream piping to the break.

(2) Failure of a feedwater isolation valve could only result in additional inventory in the feedwater line which would not be isolated from the steam generator. The mass in this volume can flash into the steam generator and exit through the break. The feedwater regulating valve closes in no more than 6.5 seconds precluding any additional feedwater from being pumped into the

steam generator. The additional line volume available to flash into the steam generator is that between the feedwater isolation valve and the feedwater regulating valve.

(3) Failure of a feedwater control valve to operate properly can result in an increased feedwater flow into the steam generator and exit through the break. Feedwater isolation valve closure limits the feedwater addition to the steam generator.

(4) Failure of the auxiliary feedwater runout control equipment would result in higher auxiliary feedwater flows entering the steam generator prior to realignment of the auxiliary feedwater system. For cases where the runout control operates properly, a constant auxiliary feed flow of approximately 1,500 gpm was assumed. This value was increased to approximately 2,250 gpm for the 100% and 0% power cases and 2040 gpm for the 30% power cases to simulate a failure of the runout control.

(5) Failure of a safety injection train results in less SI flow and will result in a greater return to power. For consistency, with the steam line break core response analysis, the steam line break mass and energy model conservatively assumes failure of a safety injection train.

Worst-Case Mass and Energy Releases

The following steam line break cases were determined to represent the worst case steamline break results.

(1) Full double-ended rupture at 100.6% of nominal full power with a failure of the AFW runout control system. This represents the limiting DER case in terms of calculated peak temperature.

(2) A 0.6 ft^2 split break at 30% of nominal full power with a failure of the AFW runout control system. This represents the limiting SB case in terms of calculated peak temperature.

(3) A 0.35 ft^2 split break at 30% at nominal full power with a failure of the AFW runout control system. This represents the limiting SB case in terms of superheat temperature duration.

Mass and energy releases for these cases are listed in Table 6.2.1-39.

Maximum Containment Temperature Analysis for Steam Line Break

Following a steam line break in the lower compartment of an ice condenser plant, two distinct analyses must be performed. The first analysis, a short-term pressure analysis, has been performed with the TMD computer code (see Section 6.2.1.3.9). The second analysis, a long-term analysis, does not require the large number of nodes

which the TMD analysis requires. The computer code which performs this analysis is the LOTIC computer code.

The LOTIC-3 computer code was developed to analyze steamline breaks in an ice condenser plant. Details of the LOTIC-3 computer code are given in Reference [3]. It includes the capability to calculate superheat conditions, and has the ability to begin calculations from time zero. The LOTIC-3 computer code has been found to be acceptable for the analysis of steam line breaks[3] with the following restrictions.

(1) Mass and energy release rates are calculated with an approved model.

(2) Complete break spectrums are analyzed.

(3) Convective heat flux calculations, as described in References [2] and [27], are performed for all break sizes.

For the worst case steam line breaks, one condensation model is used by the LOTIC-3 computer code. For these three breaks, the conservative 0% condensate reevaporization and convective heat flux model is used.

Containment Transient Calculations

The following are the major input assumptions used in the LOTIC-3 steamline break analysis for the Watts Bar Nuclear Plant.

(1) Minimum safeguards are employed, e.g., one of two spray pumps, and one of two air return fans.

(2) A quantity of 2.125×10^6 lbs of ice is assumed for the steamline break cases to be initially in the ice condenser.

(3) The boron injection tank remains installed without heat tracing, and the boric acid concentration is reduced to zero ppm (Table 6.2.1-40).

(4) The air return fan is effective 10 minutes after the transient is initiated. Actual air return fan initiation can take place in 9 ± 1 minutes. Initiation as early as 8 minutes does not adversely affect the outcome of the analysis.

(5) A uniform distribution of steam flow into the ice bed is assumed.

(6) The initial conditions in the containment are a temperature of 120°F in the lower compartment, 120°F in the dead-ended compartment, a temperature of 85°F in the upper compartment, and a temperature of 32°F in the ice condenser. All volumes (see Table 6.2.1-13) are at a pressure of 0.3 psig .

(7) A containment spray pump flow of 4,000 gpm is conservatively used in the upper compartment. A diesel loading sequence for the containment sprays to energize and come up to full flow and head in 234 seconds was used in the analysis.

(8) Containment structural heat sinks as presented in Table 6.2.1-1 were used. The material properties are given in Table 6.2.1-5.

(9) The air return fan empties air at a rate of 40,000 ft^3/min from the upper to the lower compartments. The total calculated air flow rate discharged to the dead-end compartment used is 41,885 cfm and is, therefore, bounded.

(10) A series of large break cases (1.4 ft^2 double-ended ruptures) was run to determine the limiting large break case (Table 6.2.1-41). In addition, a series of small breaks was analyzed with LOTIC at the 30% power level (Table 6.2.1-42).

(11) The mass and energy releases for the limiting breaks are given in Table 6.2.1-39. Since these rates are considerably less than the RCS double-ended breaks and their total integrated energy is not sufficient to cause icebed meltout, the containment pressure transients generated for the RCS breaks will be more severe. However, since the steam line break blowdowns are superheated, the lower compartment temperature transients calculated in this analysis will be limited. These temperature transients are given in Figures 6.2.1-69 through 6.2.1-74.

(12) The heat transfer coefficients to the containment structures are based on the work of Tagami. An explanation of their manner of application is given in Reference [3]. The stagnant heat transfer coefficients were limited to 72 Btu/hr-ft^2. This corresponds to a steam-air ratio of 1.4 (according to the Tagami correlation). The imposition of this limitation is to restrict the use of the Tagami correlation within the range of steam-air ratios from which the correlation was derived.

The containment responses presented identify the limiting and most severe cases for the large double-ended ruptures and small split breaks.

Large Break

The limiting case among the double-ended ruptures, which yielded a calculated peak temperature of 323.9°F and a peak pressure of 9.29 psig, is the 1.4 ft^2 loop break at 100.6% of nominal full power with a failure of the AFW runout control system. Figure 6.2.1-69 provides the upper and lower compartment temperature transients, and Figure 6.2.1-70 illustrates the lower compartment pressure transients. Table 6.2.1-39 contains the mass and energy release rates for the above case.

Small Break

The most severe transient in terms of superheat temperature duration for the small break spectrum is the 0.35 ft^2, 30% nominal full power, with AFW pump runout protection failure. The temperature transient with a peak temperature of 324.4°F and peak pressure of 6.58 psig for the case is presented in Figure 6.2.1-71, and the pressure transient is provided in Figure 6.2.1-72. Table 6.2.1-39 provides the mass and energy release rates for this case.

The most limiting case in terms of peak calculated temperature is the 0.6 ft^2, 30% power, with AFW pump runout protection failure. This case resulted in a calculated peak temperature of 325.1°F and peak pressure of 6.83 psig. Figure 6.2.1-73 presents the temperature transient, and Figure 6.2.1-74 shows the pressure transient of the lower compartment. The mass and energy releases are provided in Table 6.2.1-39.

Tables 6.2.1-43 and 6.2.1-44 provide the overall results of the calculated peak temperatures for the large and small break spectrums, respectively.

6.2.1.3.11 Maximum Reverse Pressure Differentials

Following a postulated pipe break accident, the occurrence inside the ice condenser containment may be characterized by two distinct periods:

(1) The initial blowdown, which occurs in approximately 10 seconds. During this period, the air initially in the lower compartment is swept into the upper compartment and the dead-ended compartment by the blowdown mass. Large mass and pressure gradients occur throughout the containment.

(2) The depressurization and post-blowdown period which occurs after the end of the initial blowdown. During this period the pressure gradient within the four compartments (upper, lower, ice condenser, and dead-ended) is almost nonexistent. The shape of the pressure transient resembles that of the mass and energy releases. Pressure decreases as blowdown diminishes, followed by a slow increase sometime during the reflood.

The analysis for the first period will usually require the modeling of the containment into many nodes so that the non-uniformity of pressure and mass distribution may be properly represented. This has been done in the TMD code.

On the other hand, the analysis for the second period will only require the modeling of the containment by a four-compartment system. These calculations are performed by the LOTIC code [1, 28].

The code options and features discussed are used in calculating ECCS back-pressure and reverse pressure differentials across the operating deck.

Basic Assumptions

(1) The containment is assumed to be physically divided into four compartments: upper, lower, ice condenser, and dead-ended compartments. Each compartment is a control volume of uniform temperature, pressure and mass distribution. Steam is also assumed to be saturated in each control volume.

(2) Flow between compartments is related to the pressure differential between the compartments by a flow resistance factor.

(3) A two-sump model is assumed. Temperature is considered to be uniform in each sump.

Conservation Equations

For each control volume or compartment, the conservation equations of mass, energy, momentum, and volume, an ideal gas law for air, and the equation of state for saturated steam may be written:

(1) Energy equation:

$$\frac{d}{dt}(M_a h_a + M_s h_s + M_c h_c) - \frac{(V_{as} + V_c)}{J} \frac{d(P_s + P_a)}{dt} + (mh)_{out} - (mh)_{in} = R_e$$

For the lower compartment:

R_e = [Rate of energy out of break]

+ [Rate of flow energy from accumulator in the form of steam, water, and nitrogen]
- [Rate of structural heat removal]
- [Rate of flow energy of sprays if applicable]
- [Rate of heat transfer to the sump]
- [Rate of heat removal by the ice condenser drain flow, if acting as a spray]
- [Rate of energy associated with the loss on condensate from atmosphere falling to floor]
+ [Net rate of flow energy from the dead-ended compartment]

For the upper compartment:

R_e = [Flow energy of the entering spray]

- [Structure heat removal rate]
- [Energy rate associated with condensate falling from atmosphere]

For the ice condenser:

R_e =[Structure heat removal rate]

- [Rate of heat transfer to the ice]
- [Energy rate associated with ice melt and steam condensate falling from atmosphere]

(2) Conservation of steam and water masses:

$$\frac{dM_s}{dt} + \frac{dM_c}{dt} + (M_s)_{out} - (M_s)_{in} = R_s$$

For the lower compartment:

R_s = [Rate of flow out of the RCS]

+ [Rate of flow out of the accumulator in the form of steam and water]
+ [Flow rate of the entering spray if applicable]
- [Rate of condensate falling to the floor]
+ [Rate of steam flow from the dead-ended compartment]

For the upper compartment:

R_s = [Flow rate of the entering spray]

- [Rate of condensate falling to the floor]

For the ice condenser:

R_s = - [Rate of condensate falling to the floor]

(3) Conservation of air mass:

$$\frac{dM_a}{dt} + (M_a)_{out} - (M_a)_{in} = R_a$$

For the lower compartment:

R_a = [Rate of nitrogen flow out of the accumulator]

+ [Rate of air flow out of the dead-ended compartment]

For the upper compartment and the ice condenser:

$R_a = 0$

(4) Conservation of momentum:

$$P_i - P_j = \frac{1}{2}\left(\frac{K_{ij}}{A^2}\right)\frac{M_{ij}^2}{\rho g_c}$$

(5) Volume conservation:

$$\frac{dV_{as}}{dt} + \frac{dV_c}{dt} = R_v$$

For the lower compartment:

R_v = [Rate of increase in sump water volume]

For the upper compartment:

$$R_v = 0$$

For the ice condenser:

R_v = [Rate of increase in free volume due to ice melting]

(6) Ideal gas law for air:

$$P_a V_{as} = M_a R_a T$$

(7) Equations of state for saturated steam:

$$P_s = f_1(T),\ h_s = f_2(T),\ v_s = f_3(T)$$

For the dead-ended compartment, the structure heat removal is assumed to be negligible, and the conservation equations of energy and mass simplified to:

$$\frac{d}{dt}(M_a h_a + M_s h_s) - \frac{v}{J}\frac{d(P_s + P_a)}{dt} = \text{[Rate of energy flow from the lower compartment]}$$

$$\frac{(dM_a)}{dt} = \text{[Rate of air flow from the lower compartment]}$$

$$\frac{(dM_s)}{dt} = \text{[Rate of steam flow from the lower compartment]}$$

Method of Solution

The preceding equations were linearized and programmed for simultaneous solutions using the standard Gauss-Jordan reduction method. For each time step, the solutions are the rates of increase of mass and pressure for each constituent in each compartment, and the flow rates between the compartments. These rates are used to control the time step so that total change of the compartment conditions in each time step can be controlled. This assures more accurate and stable solutions.

Structure Heat Transfer

The standard Westinghouse ECCS containment structural heat transfer model is applied to this code. This model assumes one dimensional conduction heat transfer in the structure and uses film heat transfer coefficient based primarily on the work of Tagami. The Tagami correlation for the film heat transfer may be written as:

$$H_{max} = 75\left[\frac{E}{t_p V}\right]^{0.6} \qquad (1)$$

$$H = H_{max} = \frac{\sqrt{t}}{\sqrt{t_p}} \quad \text{for } 0 \le t \le t_p \qquad (2)$$

$$H = H_{stag} + [H_{max} - H_{stag}]e^{-0.5[t - t_p]} \quad \text{for } t_p \le t \qquad (3)$$

where:

$$H_{stag} = 2 + 50\ X \qquad (4)$$

For this application, we have found it is useful to relate the "coolant energy transfer", (E/t_pV), to containment conditions. This may be done by writing:

$$\frac{E}{t_p V} = \frac{M_s \bar{h}_s + M_f \bar{h}_f}{t_p V} = \frac{1}{t_p v_s}\left(\bar{h}_s + \frac{M_f}{M_s}\bar{h}_f\right) \qquad (5)$$

where:

h_s, h_f and v_s are respectively the enthalpies of saturated steam and water, and the specific volume of steam, at t_p, the time when the peak containment pressure is reached.

Equations (1) through (5) are used for the lower compartment structure calculations. For the upper compartment, only the stagnant heat transfer correlation of Equation (4) is used because of little steam penetration into the upper compartment even during the initial blowdown period.

Ice Condenser Heat Transfer

The transfer of heat from steam to ice which results in the simultaneous occurrence of steam condensation and ice melting is a complex mechanism.

During the initial blowdown period when high temperature blowdown steam and water hits the bottom of ice columns, and then flows over the ice surface, turbulent condensation results. During this period the heat transfer rate is strongly dependent on the thickness of the liquid film which separates the high temperature blowdown masses from the ice. This liquid film is composed of steam condensate and ice melt. On the macroscopic scale, this is the only heat transfer resistance and the

effectiveness of the ice condenser is determined by the rate which this liquid film may be withdrawn. A semi-empirical model for the ice condenser heat transfer during this period is available and has been used successfully in the TMD code. The LOTIC code is not intended to duplicate this effort. Instead mass and energy balances are used to calculate the total ice melting during this period. Following the initial blowdown period, there is a transition period when the blowdown mass and energy rates are decreasing rapidly and the containment atmosphere as a whole is losing internal energy. Depressurization and decreasing compartment temperature generally characterize this transition period. As the containment conditions lapse into a much more stable and slowly changing pace after the transition period, the blowdown from the broken pipe is almost drawing to an end. Flow in the ice condenser is now at a rate which is almost negligible compared to that in the initial blowdown period. Temperature in the ice condenser atmosphere has also decreased. Thus, heat transfer is governed by combining natural convection and steam diffusion through an almost stagnant atmosphere. Due to the large air content, the resistance to diffusion is large. Therefore, most of the temperature difference between the free-steam steam-air mixture and the ice occurs between the free-steam and the free surface of the liquid film. Temperature difference across the liquid film is now comparatively small. Due to the loss of dominance for the liquid film resistance in the overall heat transfer mechanism, it is not surprising for Yen, Zender, Zavohik, and Tien[11] to conclude that ice melting has very little effect on the overall heat transfer coefficient for condensation-melting heat transfer in the presence of a substantial air concentration. From this, we may therefore treat the ice as if it were simply a cold structure and use Equation (4) to calculate the heat transfer coefficient after the transition period.

During the transition period, it is plausible to assume that the ice condenser is capable of maintaining its internal energy by condensing any excess energy which flow into the ice condenser.

Special Code Capabilities in Response to Previous NRC Concerns

(1) Heat removal from the lower compartment by the ice condenser drain may be accounted for by input of a spray-like efficiency.

(2) Heat transfer between the lower compartment atmosphere and the sump surface can also be taken into account.

Drains are provided at the bottom of the ice condenser compartment to allow the melt/condensate water to flow out of the compartment during a loss of coolant accident. In the modified LOTIC code, a calculation of the flow rate at which water leaves these ice condenser drains is included. The solution was reached by using the hydraulic incompressible flow equations commonly found in the literature for both filled pipe flow and fall (weir) flow conditions and at any point in time using the minimum flow rate calculated by the two methods. The filled pipe flow equation employed was a simplified Bernoulli balance:

$$Z_1 = \frac{V_2^2}{2g} + h_f + Z_2$$

where:

Z = Elevation

V = Velocity

g = Gravitational constant

ρ = Density

$h_f = \frac{fl}{sd} \bullet \frac{V_2^2}{2} g$

Subscripts 1 and 2 represent conditions at the inlet and outlet of the drain, respectively.

The area of the ice condenser sump was taken to be 3170 ft^2, and the height of the door sill to be 8.75 inches. After calculating the velocity from the previous equation, the mass flow rate can be calculated from

$$\dot{m} = \rho V_2 A_2$$

Since a filled pipe flow condition may not exist during the entire post accident transient, a calculation of the draining rate based on the existence of a fall flow phenomena was included. The corresponding equations are outlined below,

$$Q = \frac{2}{3} 2g(H_e^{3/2} - h_1^{3/2})$$

where:

Q = Discharge per foot of width (ft^3/sec-ft)

H_e = Energy of fluid upstream of the fall

h_1 = Energy of the fluid at the fall edge minus the flowing height

$D_1 = 0.643\ D_c$

$h_1 = H_e - D_1$

By assuming the approach velocity equals zero and through substitution, we arrive at the simplified equation:

$$Q = \frac{2}{3} 2g[D_c^{3/2} - (0.357 D_c)^{3/2}]$$

or

$$Q = 4.2088 D_c^{3/2}$$

where:

D_c = ft.

Calculation of Maximum Reverse Pressure Differential

The computer model previously described was used to calculate the reverse differential pressure across the operating deck. In order to calculate a maximum reverse differential pressure the following assumptions were made:

(1) The dead-ended compartment volumes adjacent to the lower compartment (fan and accumulator rooms, pipe trenches, etc.) were assumed to be swept of air during the initial blowdown. This is a very conservative assumption, since this will maximize the air mass forced into the upper ice bed and upper compartment thus raising the compression pressure. In addition, it will minimize the mass of the noncondensables in the lower compartment. With this modeling the dead-ended volume is included with that of the lower compartment (see Figure 6.2.1-75), resulting in a 3-volume simulation of the containment.

(2) The minimum containment temperatures are assumed in the various subcompartments. This will maximize the air mass forced into the upper containment. It will also increase the heat removal capability of the cold lower compartment structures.

(3) An RWST temperature of 100°F is assumed. This will help raise the upper containment temperature and pressure higher for a longer period of time. The current maximum RWST temperature is 105°F, which has a negligible effect. (See Table 6.2.1-37.)

(4) The upper containment spray flowrates used were runout flows.

(5) Containment spray to the upper compartment was assumed to start at 25 seconds. An early start time is conservative in that it raises the upper compartment temperature and pressure when the air mass in the upper compartment is at its highest value. Containment spray initiation to the upper containment is tabulated in Table 6.2.1-25. An increased delay should have no negative effect on the maximum reverse pressure differential.

(6) The containment geometry is the same as that used in the minimum pressure analysis for ECCS purposes. (See Tables 6.2.1-33 through 6.2.1-36.)

(7) The Westinghouse ECCS model (see WCAP-8339) was used for heat transfer to the structure.

(8) The mass and energy releases used are based on the analysis presented in WCAP-8479.

(9) Ice condenser doors are assumed to act as check valves, allowing flow only into the ice condenser.

(10) The loss coefficient (k/A^2) of the deck fins for air flow from the upper to the lower compartment was taken to be 0.0072 ft^{-4}. This value was based on the capabilities of the fans while running. With the fans not running the loss coefficient would be 0.0278 ft^{-4}.

With these assumptions the maximum reverse pressure differential across the operating deck was calculated to be 0.65 psi. The following plots have been provided:

Figure 6.2.1-76 which shows upper and lower compartment pressures.

Figure 6.2.1-77 which shows upper and lower compartment temperatures.

Figure 6.2.1-78 which shows upper to lower compartment flowrates.

Parametric studies have been made with this model. Various effects have been investigated to determine changes in the maximum reverse pressure differential. Table 6.2.1-37 gives some of these studies with their results. For Case 6, Figures 6.2.1-79 and 6.2.1-80 give plots similar to Figures 6.2.1-76 and 6.2.1-77. Presented in Table 6.2.1-38, also for Case 6, are the sump temperature and the steam exit flow from the ice condenser, both as a function of time.

Significant margin exists between the design reverse differential pressures across the operating deck and the ice condenser lower inlet doors and those calculated pressures presented in Table 6.2.1-37.

Nomenclature

SYMBOL	DESCRIPTION
A	Flow area
E	Total energy
J	Conversion constant, 778 ft-lbf/Btu
K	Flow resistance factor
M	Mass
P	Pressure
R	Gas constant
R	Rate

SYMBOL	DESCRIPTION
T	Temperature
V	Volume
g_c	Conversion constant, 32.2 ft-lbm/lbf-sec^2
h	Enthalpy
m	Mass flow rate between two compartments
t	Time
x	Steam-air ratio
v	Specific volume
ρ	Density

SUBSCRIPT

a	Air
as	Air and steam
c	Suspended or entrained water
e	Energy
i	i-th compartment
j	j-th compartment
ij	from i-th compartment to j-th compartment
s	Steam

REFERENCES

(1) “Long Term Ice Condenser Containment Code - LOTIC Code,” WCAP-8354-P-A, April 1976 (Proprietary), WCAP-8355A, April 1976 (Non-proprietary).

(2) "Final Report Ice Condenser Full-Scale Section Tests at the Waltz Mill Facility", WCAP-8282, February 1974 (Proprietary).

(3) “Westinghouse Long-Term Ice Condenser Containment Code - LOTIC-3 Code,” WCAP-8354-P-A S2, February 1979 (Proprietary), WCAP-8355-NP-S2, February 1979 (Non-Proprietary).

(4) "Ice Condenser Containment Pressure Transient Analysis Method," WCAP-8078, March 1973 (Non-Proprietary).

(5) “Test Plans and Results for the Ice Condenser System, Ice Condenser Full-Scale Section Test at the Waltz Mill Facility,” WCAP-8110-S6, May 1974 (Non-proprietary).

(6) Deleted by Amendment 85.

(7) Deleted by Amendment 85.

(8) Deleted by Amendment 85.

(9) “Topical Report Westinghouse Mass and Energy Release Data for Containment Design,” WCAP-8264-P-A, Rev. 1, August 1975 (Proprietary), WCAP-8312-A, Rev. 2 (Non-proprietary).

(10) Deleted by Amendment 85.

(11) Yen, Y. C., Zender, A., Zavohik, S. and Tien, C., "Condensation - Melting Heat Transfer in the Presence of Air," Thirteenth National Heat Transfer Conference, AICHE - ASME Denver.

(12) Crane Technical Paper #410, "Flow of Fluid."

(13) "Electrical Hydrogen Recombiner for PWR Containments," WCAP-7709-P-A (Proprietary) and WCAP-7820-A (Non-Proprietary) and Supplements 1, 2, 3, and 4.

(14) Burnett, T. W. T., et al, "LOFTRAN Code Description," WCAP-7907-P-A (Proprietary), April 1984, WCAP-7907-A (Non-Proprietary), April 1984.

(15) King, H. W., "Handbook of Hydraulics," 4th Edition, 1954.

(16) Deleted by Amendment 97.

(17) Deleted by Amendment 97.

(18) Deleted by Amendment 97.

(19) US NRC Regulatory Guide 1.7, Rev. 2, November 1978, "Control of Combustible Gas Concentrations in Containment Following a Loss of Coolant Accident."

(20) "Westinghouse LOCA Mass and Energy Release Model for Containment Design March 1979 Version," WCAP-10325-P-A, May 1983 (Proprietary), WCAP-10326-A May 1983 (Non-proprietary).

(21) “Interim Report on Safety Assessments and Facilities Establishment Project in Japan for Period Ending June 1965 (No. 1)”, Tagami, Takasi.

(22) "Topical Report Westinghouse ECCS Evaluation Model 1981 Version," WCAP-9220-P-A, Revision 1, February 1982 (Proprietary), WCAP-9221-A, Revision I, February 1982 (Non-Proprietary).

(23) Docket No. 50-315, "Amendment No. 126, Facility Operating License No. DPR-58 (TAC No. 71062), D. C. Cook Nuclear Plant Unit 1," June 9, 1989.

(24) “Mixing of Emergency Core Cooling Water with Steam: 1/3-Scale Test and Summary,” WCAP-8423, June 1975 (Proprietary).

(25) ANSI/ANS-5.1-1979, “American National Standard for Decay Heat Power in Light Water Reactor,” August 29, 1979.

(26) W. H. McAdams, Heat Transmission, McGraw-Hill 3rd edition, 1954, p. 172.

(27) “Answers to AEC Questions on Report WCAP-8282,” WCAP-8282-AD1, May 1974 (Proprietary).

(28) “Long Term Ice Condenser Containment Code - LOTIC Code,” WCAP-8354-P-A-S1, April 1976 (Proprietary), WCAP-8355-A-S1, April 1976 (Non–proprietary).

Table 6.2.1-1 Structural Heat Sinks
(Page 1 of 2)

	Area (ft^2)	Thickness (ft)	Material
A. Upper Compartment			
1. Operating Deck			
Slab 1	4880	1.066	Concrete
Slab 2	18280	0.0055 1.4	Paint Concrete
Slab 3	760	0.0055 1.5	Paint Concrete
Slab 4	3840	0.0208 1.5	Stainless Steel Concrete
2.Shell and Misc			
Slab 5	56331	0.001 0.079	Paint Steel
B. Lower Compartment			
1. Operating Deck, Crane Wall, and Interior Concrete			
Slab 6	31963	1.43	Concrete
2. Operating Deck			
Slab 7	2830	0.0055 1.1	Paint Concrete
Slab 8	760	0.0055 1.75	Paint Concrete
3. Interior Concrete and Stainless Steel			
Slab 9	2270	0.0208 2.0	Stainless Steel Concrete
4. Floor*			
Slab 10	15921	0.0055 1.6	Paint Concrete
5. Misc Steel			
Slab 11	28500	0.001 0.0656	Paint Steel

Table 6.2.1-1 Structural Heat Sinks
(Page 2 of 2)

	Area (ft^2)	Thickness (ft)	Material
C. Ice Condenser			
1. Ice Baskets			
Slab 12	149,600	0.00663	Steel
2. Lattice Frames			
Slab 13	75,865	0.0217	Steel
3. Lower Support Structure			
Slab 14	28,670	0.0587	Steel
4. Ice Condenser Floor			
Slab 15	3,336	0.0055 0.33	Paint Concrete
5. Containment Wall Panels & Containment Shell			
Slab 16	19,100	1.0 0.0625	Steel & Insulation Steel Shell
6. Crane Wall Panels and Crane Wall			
Slab 17	13,055	1.0 1.0	Steel & Insulation Concrete

* In contact with sump.

Table 6.2.1-2 Pump Flow Rates Vs. Time

(Time Sequence to Switchover from Injection to Recirculation)

	Time after Safeguards Initiation (sec)	CCP Flow (gpm)	HHSI Pump Flow (gpm)	RHR Pump Flow (gpm)	CSS Pump Flow (gpm)	RHR Spray Flow (gpm)	Sump Flowrate (gpm)	RWST Flowrate (gpm)
SI Signal Initiated	0	0	0	0	0	0	0	0
CCP Starts and Reaches Rated Flow	12	560	0	0	0	0	0	560
HHSI Pump Starts and Reaches Rated Flow	17	560	675	0	0	0	0	1235
RHR Pump Starts and Reaches Rated Flow	22	560	675	5500	0	0	0	6735
CSS Pump Starts and Reaches Rated Flow	234	560	675	5500	4950	0	0	11685
RWST Low Level Alarm, Automatic Realignment of RHR	1207.3	560	675	5500	4950	0	0	11685
Sump Valves Open, RWST to RHR Valves Close	1267.3	560	675	2750	4950	0	2750	6185
HHSI & CCP Suction Valves from RHR Discharge Open	1344.3	560	675	2750	4950	0	2750	4950
Low-Low RWST Level Alarm	2588.7	560	675	2750	4950	0	2750	4950
Shut Off CSS Pump	2598.7	560	675	2750	0	0	2750	0
Restart CSS Pump	2718.7	560	675	2750	0	0	2750	0
Start RHR Spray	≥3600	560	675	2750	4950	2000	2750	0

Table 6.2.1-3 Energy Balances

Sink	Approx. End of Blowdown (t = 10.0 sec)	Approx. End of Reflood (t=238.369 sec)
	(Millions of BTUs)	
Ice Heat Removal*	185.132	240.230
Structural Heat Sinks*	18.062	61.5827
RHR Heat Exchanger Heat Removal*	0.0	0.0
Spray Heat Exchanger Heat Removal*	0.0	0.0045
Energy Content of Sump**	170.54	225.50
Ice Melted (lb x 10^6)	0.59768	0.8183

*Integrated energies

**Energy Content of Sump = $\Sigma E_{SUMP} = E_{ACTIVE\ SUMP} + E_{INACTIVE\ SUMP}$

Table 6.2.1-4 Energy Balances

	Approx. Time of Ice Melt-Out (t=4077.94 sec)	Approx. Time of Peak Pressure (t=7172.82 sec)
	(Millions of BTUs)	
Ice Heat Removal*	600.279	600.302
Structural Heat Sinks*	81.931	118.347
RHR Heat Exchanger Heat Removal*	34.2043	67.585
Spray Heat Exchanger Heat Removal*	24.0589	84.645
Energy Content of Sump**	546.44	563.982
Ice Melted (lb x 10^6)	2.2599	2.26

*Integrated energies

**Energy Content of Sump = $\Sigma E_{SUMP} = E_{ACTIVE\ SUMP} + E_{INACTIVE\ SUMP}$

Table 6.2.1-5 Material Property Data

Material	Thermal Conductivity Btu/hr-ft-°F	Volumetric Heat Btu/ft^3-°F
Paint on Steel	0.21	19.9
Paint on Concrete	0.083	39.9
Concrete	0.8	31.9
Stainless Steel	9.4	53.68
Carbon Steel	26.0	53.9
Carbon Steel*	26.0	56.4
Concrete*	0.8	28.8
Insulation on steel (containment walls)*	0.15	2.75
Insulation on steel (crane walls)*	0.20	3.663

*Located in Ice Condenser Compartment

Table 6.2.1-6 TMD Input for Watts Bar

Element	Volume (ft^3)	PSteam (psia)	PAir (psia)	Initial Temperature (°F)
1	28700.	0.3	14.7	120.
2	36800.			
3	70200.			
4	38800.			
5	36800.			
6	25114.			
25	651000.	0.3	14.7	120
26	11700.			
27	17900.			
28	11200.			
29	18700.			
30	11200.			
31	18000.	0.3	14.7	120.
32	10100.			
33	15300.			
34	13000.			
35	4400.			
36	4400.			
37	9300.			
50	1400.			
		0.3	14.7	120.

Table 6.2.1-7 TMD Flow Input Data For Watts Bar (Page 1 of 2)

Flow Path Element to Element	Flow Path Length (ft)	Flow Area (ft^2)	Loss Coefficient K	Area Ratio a/A
1 to 33	6.5	22	1.5	0.048
2 to 27	3.5	48	4.2	0.027
3 to 33	10.2	64	1.5	0.048
4 to 33	7.9	44	1.5	0.048
5 to 31	3.5	42	4.2	0.027
6 to 33	5.7	16	1.5	0.048
26 to 27	9.0	23	2.7	0.067
27 to 3	9.3	46	4.2	0.027
28 to 27	9.0	23	2.7	0.067
29 to 36	3.7	15	3.0	0.044
30 to 31	9.0	23	2.7	0.067
31 to 6	11.0	58	4.2	0.027
32 to 31	9.0	23	2.7	0.067
33 to 5	7.8	36	1.5	0.048
34 to 26	6.6	59	1.5	0.171
35 to 28	2.8	17	1.5	0.049
36 to 30	2.8	17	1.5	0.049
37 to 32	3.2	23	1.5	0.067
50 to 4	3.6	1.6	1.5	0.002
50 to 4	3.9	2.5	1.5	0.002
50 to 30	3.8	6.8	1.5	0.067
1 to 2	17.5	550	0.33	0.43
2 to 3	24.2	550	0.33	0.43
3 to 4	22.3	600	0.30	0.47
4 to 5	19.7	550	0.33	0.43
5 to 6	17.2	550	0.33	0.43
6 to 1	29.4	140	1.32	0.09
26 to 32	71.0	126	1.6	0.843
27 to 1	6.9	60	4.2	0.027
28 to 26	80.0	146	0.5	0.977
29 to 35	3.8	15	3.0	0.044
30 to 28	51.0	81	1.6	0.542
31 to 4	9.3	44	4.2	0.027
32 to 30	80.0	146	0.5	0.977
33 to 2	8.1	38	1.5	0.048
34 to 27	4.5	17	3.0	0.049
35 to 27	3.7	15	3.0	0.044
36 to 31	3.1	10	3.0	0.029
37 to 31	3.4	10	3.0	0.029

Table 6.2.1-7 TMD Flow Input Data For Watts Bar (Page 2 of 2)

Flow Path Element to Element	Flow Path Length (ft)	Flow Area (ft^2)	Loss Coefficient K	Area Ratio a/A
40 to 1	10.36	121.9		
41 to 2	10.36	144.0		
42 to 3	10.36	288.0		
43 to 4	10.36	199.4		
44 to 5	10.36	155.1		
45 to 6	10.36	155.1		

Table 6.2.1-8 Calculated Maximum Peak Pressures In Lower Compartment Elements Assuming Unaugmented Flow

Element	1	2	3	4	5	6	
Peak Pressure (psig)	18.5	14.0	12.8	12.9	13.9	17.9	DECL - 100% Ent.
Peak Pressure (psig)	16.0	12.0	10.5	10.6	12.1	15.8	DEHL - 100% Ent.

Table 6.2.1-9 Calculated Maximum Peak Pressures In The Ice Condenser Compartment Assuming Unaugmented Flow

Element	40	41	42	43	44	45	
Peak Pressure (psig)	13.9	10.3	9.4	9.4	10.2	13.6	DECL - 100% Ent.
Peak Pressure (psig)	11.5	8.5	7.8	7.8	8.7	11.4	DEHL - 100% Ent.

Table 6.2.1-10 Calculated Maximum Differential Pressures Across The Operating Deck Or Lower Crane Wall Assuming Unaugmented Flow

Element	1	2	3	4	5	6	
Peak ΔP (psi)	16.6	11.2	9.0	9.2	11.0	16.2	DECL - 100% Ent.
Peak ΔP (psi)	15.7	11.7	8.8	8.9	11.8	15.5	DEHL - 100% Ent.

Table 6.2.1-11 Calculated Maximum Differential Pressures Across The Upper Crane Wall Assuming Unaugmented Flow

Element	7-8-9	10-11-12	13-14-15	16-17-18	19-20-21	22-23-24	
Peak ΔP (psi)	7.2	5.9	5.6	5.7	6.0	7.2	DECL - 100% Ent.
Peak ΔP (psi)	8.4	7.1	6.4	6.3	7.01	8.4	DEHL - 100% Ent.

Table 6.2.1-12 Sensitivity Studies For D. C. Cook Plant (Page 1 of 2)

PARAMETER	CHANGE MADE FROM BASE VALUE(1)	CHANGE IN OPERATING DECK ΔP(1)	CHANGE IN PEAK PRESSURE AGAINST THE SHELL(1)
Blowdown	+ 10%	+ 11%	+ 12%
Blowdown	- 10%	- 10%	- 12%
Blowdown	- 20%	- 20%	- 23%
Blowdown	- 50%	- 50%	- 53%
Break Compartment Inertial Length	+ 10%	+ 4%	+ 1%
Break Compartment Inertial Length	- 10%	- 4%	- 1%
Break Compartment Volume	+ 10%	- 2%	- 1%
Break Compartment Volume	- 10%	+ 2%	+ 1%
Break Compartment Vent Areas	+ 10%	- 6%	- 5%
Break Compartment Vent Areas	- 10%	+ 8%	+ 5%
Door Port Failure in Break Compartment	one door port fails to open	+ 1%	- 1%
Ice Mass	+ 10%	0	0
Ice Mass	- 10%	0	0
Door Inertia	+ 10%	+ 1%	0
Door Inertia	- 10%	- 1%	0
All Inertial Lengths	+ 10%	+ 5%	+ 4%
All Inertial Lengths	- 10%	- 5%	- 3%
Ice Bed Loss Coefficients	+ 10%	0	0
Ice Bed Loss Coefficients	- 10%	0	0
Entrainment Level	0% Ent	- 27%	- 11%
Entrainment Level	30% Ent	- 19%	- 15%
Entrainment Level	50% Ent	- 13%	- 12%
Entrainment Level	75% Ent	- 6%	- 6%
Lower Compartment Loss Coefficients	+ 10%	0	0
Lower Compartment Loss Coefficients	- 10%	0	0
Cross Flow in Lower Plenum	low estimate of resistance	0	- 7%
Cross Flow in Lower Plenum	high estimate of resistance	0	- 3%
Ice Condenser Flow Area	+ 10%	0	- 3%

Table 6.2.1-12 Sensitivity Studies For D. C. Cook Plant (Page 2 of 2)

PARAMETER	CHANGE MADE FROM BASE VALUE[1]	CHANGE IN OPERATING DECK ΔP[1]	CHANGE IN PEAK PRESSURE AGAINST THE SHELL[1]
Ice Condenser Flow Area	- 10%	0	+ 4%
Ice Condenser Flow Area	+ 20%	0	- 6%
Ice Condenser Flow Area	- 20%	0	+ 8%
Initial Pressure in Containment	+ 0.3 psi	+ 2%	+ 2%
Initial Pressure in Containment	- 0.3 psi	- 2%	- 2%
Initial Ice Bed Temperature	+ 15°F	0	0
Initial Ice Bed Temperature	- 15°F	0	+ 1%

[1] All values shown are to the nearest percent.

Table 6.2.1-13 Watts Bar Ice Condenser Design Parameters

Reactor Containment Volume (net free volume, ft^3)	
Upper Compartment	692,818
Ice Compartment	110,520
Lower Compartment	273,674
Lower Compartment (dead-ended)	94,000
Total Containment Volume	1,171,012
NSSS	
Fraction of Nominal (FON) based on NSSS Power of, MWt	3,475*
Analysis weight of ice in condenser, lbs (all main steamline breaks)	2.125×10^6
Core Nuclear Power - FON	
100% power cases	1.006
30% power cases	0.30
0% power cases	Critical at 0.0

* Includes RCP power (16 MWt)

Table 6.2.1-14 Allowable Leakage Area For Various Reactor Coolant System Break Sizes

Break Size	5 ft^2 Deck Leak Air Compression Peak (psig)	Deck Leakage Area (ft^2)	Resultant Peak Containment Pressure (psig)
Double-ended	7.8	54	12.0
0.6 Double-ended	6.6	40	12.0
3 ft^2	6.25	46	12.0
10 inch diameter	5.75	38	12.0
10 inch diameter*	5.75	50	10.7*
6 inch diameter	5.5	41	12.0
6 inch diameter*	5.5	50	10.0*
2 inch diameter	5.0	50	5.0
2 inch diameter*	4.0	50	4.2*
1/2 inch diameter	3.0	>50	3.0

*This case assumes an upper compartment structural heat sink steam condensation of 6 lb/sec and 30% of deck leakage is air.

Note: One spray pump at 4750 gpm at 100°F was assumed for all breaks smaller than the 3 ft^2 break.

Table 6.2.1-15 System Parameters Initial Conditions

Parameters	Value
Core Thermal Power (MWt)	3,411
Reactor Coolant System Flow Rate, per Loop (gpm)	93,100
Vessel Outlet Temperature (1) (°F)	619.1
Core Inlet Temperature (1) (°F)	560.6
Initial Steam Generator Steam Pressure (psia)	1,021
Steam Generator Design Model	D3-2
Steam Generator Tube Plugging (%)	0
Initial Steam Generator Secondary-Side Mass (lbm)	122,474.0
Accumulator	
Water Volume (ft^3)	1,020/tank plus 24.06 (average) per line
N_2 Cover Gas Pressure (psig)	585
Temperature (°F)	130
Safety Injection Delay (sec) (includes time to reach pressure setpoint)	35.91
Auxiliary Feedwater Flow (gpm/SG)	205

Notes:

1. Analysis value includes an additional +7.0°F allowance for instrument error and dead band.

Table 6.2.1-16 Double-Ended Pump Suction Guillotine Break - Blowdown Mass and Energy Releases (Page 1 of 6)

	Break Path No. 1 Flow(1)		Break Path No. 2 Flow(2)	
Time (s)	Mass (lbm/s)	Energy Thousand (Btu/s)	Mass (lbm/s)	Energy Thousand (Btu/s)
.00000	.0	.0	.0	.0
.00108	89712.6	50762.4	43601.9	24614.6
.101	43094.0	24408.0	22422.1	12643.8
.201	43856.5	25030.2	24601.2	13884.1
.302	44826.2	25848.2	24546.0	13863.3
.402	45655.2	26641.0	23487.2	13275.5
.502	45932.3	27125.3	22305.6	12615.5
.601	45342.1	27066.8	21270.5	12033.3
.702	43906.6	26466.4	20347.1	11514.0
.802	42340.1	25754.0	19762.1	11187.8
.902	40924.8	25110.1	19436.0	11008.0
1.00	39663.2	24549.7	19248.4	10904.7
1.10	38491.5	24047.8	19140.7	10845.5
1.20	37367.5	23568.9	19073.3	10808.2
1.30	36366.4	23129.0	19032.0	10785.1
1.40	35429.3	22742.0	19018.6	10777.4
1.50	34605.8	22396.6	19029.2	10783.4
1.60	33835.3	22078.8	19040.4	10789.6
1.70	32977.7	21703.4	19030.3	10783.6
1.80	32135.3	21331.4	18999.1	10765.6
1.90	31229.0	20911.5	18968.5	10748.0
2.00	30303.2	20472.2	18952.4	10739.1
2.10	29365.5	20015.2	18903.1	10711.4
2.20	28369.6	19506.7	18787.0	10645.6
2.30	27071.6	18771.5	18638.7	10561.7
2.40	25082.4	17526.9	18497.9	10482.6
2.50	22687.2	15964.4	18242.8	10337.8
2.60	21549.0	15284.6	17808.6	10092.3
2.70	21053.8	15026.3	17580.4	9964.6

Table 6.2.1-16 Double-Ended Pump Suction Guillotine Break - Blowdown Mass and Energy Releases (Page 2 of 6)

	Break Path No. 1 Flow(1)		Break Path No. 2 Flow(2)	
Time (s)	Mass (lbm/s)	Energy Thousand (Btu/s)	Mass (lbm/s)	Energy Thousand (Btu/s)
2.80	20276.3	14526.1	17370.0	9846.6
2.90	19722.2	14179.0	17152.7	9724.7
3.00	19155.2	13811.0	16939.6	9605.5
3.10	18519.0	13386.6	16728.4	9487.5
3.20	17858.5	12941.2	16526.8	9375.1
3.30	17237.0	12519.1	16356.1	9280.5
3.40	16664.0	12126.5	16189.5	9188.1
3.50	16135.3	11761.7	16029.4	9099.5
3.60	15684.3	11449.9	15890.4	9023.0
3.70	15293.8	11177.7	15749.4	8945.1
3.80	14949.6	10935.5	15608.3	8867.4
3.90	14660.8	10730.6	15474.7	8793.9
4.00	14411.9	10550.7	15338.6	8719.0
4.20	13995.1	10241.0	15085.2	8579.8
4.40	13685.1	9998.8	14859.1	8455.9
4.60	13469.8	9816.4	14646.7	8339.2
4.80	13389.7	9725.0	15972.4	9101.4
5.00	13353.4	9660.2	15869.4	9046.7
5.20	13334.0	9608.6	15813.3	9019.8
5.40	13368.1	9593.9	15606.9	8906.4
5.60	13394.4	9576.5	15421.3	8804.9
5.80	13393.4	9546.8	15244.9	8708.5
6.00	13405.9	9531.2	15066.8	8610.5
6.20	13572.7	9609.4	14952.0	8547.9
6.40	14579.1	10251.0	14827.7	8477.2
6.60	13823.3	9698.1	14735.9	8424.2
6.80	12345.9	9194.5	14621.0	8356.3
7.00	11394.9	8764.0	14414.4	8236.3
7.20	11597.3	8841.1	14243.3	8138.4

Table 6.2.1-16 Double-Ended Pump Suction Guillotine Break - Blowdown Mass and Energy Releases (Page 3 of 6)

	Break Path No. 1 Flow(1)		Break Path No. 2 Flow(2)	
Time (s)	Mass (lbm/s)	Energy Thousand (Btu/s)	Mass (lbm/s)	Energy Thousand (Btu/s)
7.40	11947.5	8980.9	14058.9	8033.8
7.60	12225.2	9070.5	13892.7	7938.5
7.80	12560.0	9201.3	13675.1	7812.7
8.00	12989.9	9386.9	13476.1	7698.1
8.20	13385.5	9545.5	13283.5	7587.0
8.40	13665.4	9636.4	13073.6	7465.8
8.60	13841.0	9669.5	12879.7	7353.7
8.80	13807.3	9573.5	12680.8	7238.5
9.00	13498.6	9314.4	12496.5	7131.7
9.20	13022.4	8963.6	12327.1	7033.2
9.40	12497.9	8595.0	12160.4	6936.2
9.60	11843.7	8154.1	12010.7	6849.0
9.80	11140.2	7705.4	11886.4	6776.5
10.0	10660.1	7426.5	11749.2	6696.3
10.2	10281.0	7218.0	11600.3	6609.8
10.4	9873.9	6993.1	11476.5	6538.7
10.6	9533.0	6815.5	11329.4	6453.4
10.8	9225.5	6655.1	11186.9	6370.7
10.8	9223.9	6654.2	11186.2	6370.3
10.8	9222.3	6653.4	11185.5	6369.9
10.8	9220.7	6652.6	11184.8	6369.5
10.8	9219.1	6651.7	11184.2	6369.1
11.0	8936.8	6502.7	11053.3	6293.2
11.2	8670.4	6359.3	10908.9	6209.0
11.4	8429.1	6227.2	10773.7	6130.3
11.6	8202.5	6100.7	10637.8	6051.0
11.8	7995.9	5984.7	10501.8	5971.7
12.0	7801.3	5872.4	10370.6	5895.0
12.2	7620.1	5765.8	10237.4	5817.4

Table 6.2.1-16 Double-Ended Pump Suction Guillotine Break - Blowdown Mass and Energy Releases (Page 4 of 6)

	Break Path No. 1 Flow(1)		Break Path No. 2 Flow(2)	
Time (s)	Mass (lbm/s)	Energy Thousand (Btu/s)	Mass (lbm/s)	Energy Thousand (Btu/s)
12.4	7428.1	5648.9	10093.2	5733.4
12.6	7241.0	5536.1	9935.5	5641.8
12.8	7062.2	5413.1	9797.1	5561.8
13.0	6911.0	5289.2	9644.3	5473.0
13.2	6782.5	5171.0	9503.4	5391.2
13.4	6659.3	5056.2	9352.7	5303.9
13.6	6536.6	4943.8	9211.9	5222.6
13.8	6416.8	4834.3	9072.5	5142.2
14.0	6304.7	4732.1	8943.7	5068.2
14.2	6200.8	4638.5	8821.2	4998.1
14.4	6100.5	4552.3	8696.6	4927.1
14.6	6002.9	4475.3	8613.6	4881.1
14.8	5906.1	4404.2	8465.9	4797.4
15.0	5819.3	4347.0	8390.0	4757.1
15.2	5744.5	4304.1	8075.8	4603.5
15.4	5703.7	4334.8	7826.8	4508.2
15.6	5554.5	4375.8	7620.9	4420.6
15.8	5303.5	4397.9	7376.9	4295.9
16.0	5020.2	4414.8	7158.9	4148.0
16.2	4723.5	4422.2	6969.4	3974.1
16.4	4381.2	4377.2	6717.4	3734.7
16.6	3992.8	4268.2	6501.0	3493.8
16.8	3590.5	4096.1	6163.4	3186.5
17.0	3238.6	3861.1	5714.3	2849.3
17.2	2936.4	3583.9	5329.5	2569.9
17.4	2653.2	3270.5	4962.0	2320.2
17.6	2424.7	3006.0	4634.0	2106.2
17.8	2237.9	2785.3	4352.8	1928.5
18.0	2096.9	2617.9	4115.4	1782.3

Table 6.2.1-16 Double-Ended Pump Suction Guillotine Break - Blowdown Mass and Energy Releases (Page 5 of 6)

	Break Path No. 1 Flow(1)		Break Path No. 2 Flow(2)	
Time (s)	Mass (lbm/s)	Energy Thousand (Btu/s)	Mass (lbm/s)	Energy Thousand (Btu/s)
18.2	1968.4	2463.2	3691.9	1563.3
18.4	1841.0	2308.1	3455.1	1419.9
18.6	1687.7	2119.8	4598.6	1828.7
18.8	1530.5	1926.1	6057.6	2384.2
19.0	1375.8	1735.3	6206.9	2436.5
19.2	1266.4	1600.3	4314.4	1684.7
19.4	1181.6	1495.4	3407.0	1328.4
19.6	1107.9	1403.8	2799.2	1089.2
19.8	1022.7	1297.1	1865.1	721.6
20.0	927.0	1176.8	1758.9	610.8
20.2	835.6	1062.1	2754.6	866.1
20.4	752.0	956.9	3886.7	1181.9
20.6	681.5	868.1	3597.6	1082.9
20.8	616.7	786.3	3181.0	953.9
21.0	560.7	715.5	2954.6	884.1
21.2	522.1	667.1	2871.5	858.0
21.4	491.7	628.6	2807.9	838.2
21.6	468.2	598.7	2630.0	784.3
21.8	434.3	555.8	2427.1	722.1
22.0	395.9	506.9	2235.5	661.7
22.2	356.9	457.3	2003.3	586.6
22.4	317.1	406.7	1804.1	520.0
22.6	277.3	355.8	1622.6	459.7
22.8	243.7	313.0	1465.5	408.6
23.0	222.5	285.8	1356.9	373.6
23.2	203.5	261.6	1322.1	360.8
23.4	187.5	241.1	1329.8	361.2
23.6	172.4	221.8	1347.4	365.5
23.8	171.6	220.9	1364.4	370.1

Table 6.2.1-16 Double-Ended Pump Suction Guillotine Break - Blowdown Mass and Energy Releases (Page 6 of 6)

	Break Path No. 1 Flow(1)		Break Path No. 2 Flow(2)	
Time (s)	Mass (lbm/s)	Energy Thousand (Btu/s)	Mass (lbm/s)	Energy Thousand (Btu/s)
24.0	164.8	212.1	1363.4	370.2
24.2	157.5	202.8	1327.2	361.0
24.4	150.2	193.4	1234.7	336.8
24.6	143.0	184.2	1045.8	286.7
24.8	136.3	175.6	677.5	187.5
25.0	129.7	167.2	.0	.0
25.2	123.2	158.9	.0	.0
25.4	110.0	142.0	.0	.0
25.6	92.7	119.8	.0	.0
25.8	73.4	94.8	.0	.0
26.0	63.7	82.4	25.5	9.5
26.2	47.9	62.2	83.9	32.9
26.4	46.9	60.8	84.2	33.7
26.6	31.2	40.6	55.4	21.6
26.8	10.8	14.1	.0	.0
27.0	.0	.0	.0	.0

Notes:

1. M&E exiting from the SG side of the break (path 1).
2. M&E exiting from the pump side of the break (path 2).

Table 6.2.1-17 Double-Ended Pump Suction Guillotine Break - Reflood Mass and Energy Release - Minimum Safety Injection (Page 1 of 7)

	Break Path No. 1 Flow(1)		Break Path No. 2 Flow(2)	
Time (s)	Mass (lbm/s)	Energy Thousand (Btu/s)	Mass (lbm/s)	Energy Thousand (Btu/s)
27.0	.0	.0	.0	.0
27.5	.0	.0	.0	.0
27.7	.0	.0	.0	.0
27.8	.0	.0	.0	.0
27.9	.0	.0	.0	.0
28.0	.0	.0	.0	.0
28.0	.0	.0	.0	.0
28.1	33.5	39.0	.0	.0
28.2	13.5	15.8	.0	.0
28.4	14.3	16.7	.0	.0
28.5	18.1	21.1	.0	.0
28.6	23.6	27.5	.0	.0
28.7	27.9	32.4	.0	.0
28.8	31.9	37.2	.0	.0
28.9	35.9	41.8	.0	.0
29.0	39.3	45.7	.0	.0
29.1	42.1	49.0	.0	.0
29.2	44.9	52.2	.0	.0
29.3	47.5	55.2	.0	.0
29.4	50.0	58.2	.0	.0
29.5	52.4	61.0	.0	.0
29.6	55.1	64.1	.0	.0
29.7	57.6	67.1	.0	.0
29.8	59.3	69.0	.0	.0
29.8	60.1	70.0	.0	.0
29.9	62.5	72.7	.0	.0
30.0	64.5	75.1	.0	.0
30.1	66.8	77.8	.0	.0

Table 6.2.1-17 Double-Ended Pump Suction Guillotine Break - Reflood Mass and Energy Release - Minimum Safety Injection (Page 2 of 7)

	Break Path No. 1 Flow(1)		Break Path No. 2 Flow(2)	
Time (s)	Mass (lbm/s)	Energy Thousand (Btu/s)	Mass (lbm/s)	Energy Thousand (Btu/s)
31.1	84.7	98.7	.0	.0
32.1	99.9	116.4	.0	.0
33.1	210.2	246.2	2750.5	373.9
34.2	334.9	394.2	4523.9	669.7
34.9	333.9	393.0	4510.3	671.7
35.2	332.7	391.6	4493.3	670.0
36.2	356.5	419.9	4843.9	700.3
37.2	349.1	411.2	4757.2	688.8
38.2	344.1	405.2	4690.4	680.2
39.2	339.2	399.3	4623.8	671.5
40.2	334.5	393.7	4558.4	662.8
40.6	332.6	391.5	4532.7	659.4
41.2	329.9	388.2	4494.6	654.4
42.2	325.6	383.0	4432.6	646.1
43.2	321.2	377.8	4372.7	638.1
44.2	316.5	372.2	4315.1	630.5
45.2	311.9	366.8	4259.4	623.1
46.2	307.5	361.6	4205.5	616.0
47.2	303.4	356.6	4153.4	609.1
48.2	299.3	351.8	4102.9	602.4
48.4	298.5	350.8	4093.0	601.1
49.2	295.4	347.2	4054.1	596.0
50.2	291.7	342.7	4006.8	589.8
51.2	288.1	338.5	3960.9	583.7
52.2	284.7	334.4	3916.5	577.8
53.2	281.3	330.4	3873.3	572.2
54.2	278.1	326.6	3831.5	566.6
55.2	275.0	322.9	3790.8	561.3

Table 6.2.1-17 Double-Ended Pump Suction Guillotine Break - Reflood Mass and Energy Release - Minimum Safety Injection (Page 3 of 7)

	Break Path No. 1 Flow(1)		Break Path No. 2 Flow(2)	
Time (s)	Mass (lbm/s)	Energy Thousand (Btu/s)	Mass (lbm/s)	Energy Thousand (Btu/s)
56.2	272.0	319.3	3751.2	556.1
57.2	269.1	315.8	3712.8	551.0
57.7	267.6	314.1	3693.9	548.6
58.2	266.2	312.5	3675.4	546.1
59.2	263.5	309.2	3638.9	541.3
60.2	260.9	306.1	3603.4	536.7
61.2	258.3	303.1	3568.8	532.1
62.2	255.8	300.1	3535.1	527.7
63.2	253.4	297.2	3502.2	523.4
64.2	251.0	294.4	3470.0	519.2
65.2	248.7	291.7	3438.7	515.1
66.3	208.1	243.6	2823.0	440.5
67.3	311.8	366.3	274.5	156.8
68.3	358.2	422.0	296.0	187.5
69.3	355.2	418.5	294.6	185.6
70.3	348.9	410.9	291.5	181.4
71.3	342.9	403.8	288.5	177.2
72.3	337.3	397.1	285.7	173.4
73.3	332.0	390.8	283.0	169.6
74.3	326.8	384.5	280.4	166.0
75.3	321.4	378.0	277.7	162.5
76.3	316.0	371.6	275.4	159.4
77.3	311.2	365.9	273.4	156.6
78.3	306.6	360.4	271.4	154.0
79.3	302.2	355.2	269.6	151.6
80.3	298.0	350.2	267.8	149.2
81.3	294.0	345.5	266.1	147.0
82.3	290.2	340.9	264.5	144.8

Table 6.2.1-17 Double-Ended Pump Suction Guillotine Break - Reflood Mass and Energy Release - Minimum Safety Injection (Page 4 of 7)

	Break Path No. 1 Flow(1)		Break Path No. 2 Flow(2)	
Time (s)	Mass (lbm/s)	Energy Thousand (Btu/s)	Mass (lbm/s)	Energy Thousand (Btu/s)
83.3	286.5	336.6	263.0	142.8
84.3	283.0	332.4	261.5	140.9
85.3	279.7	328.4	260.1	139.0
86.3	276.5	324.6	258.8	137.2
87.3	273.4	321.0	257.5	135.5
87.5	272.8	320.2	257.2	135.2
88.3	270.4	317.5	256.3	133.9
90.3	264.9	310.9	254.0	130.9
92.3	259.9	304.9	251.9	128.2
94.3	255.2	299.4	250.0	125.6
96.3	251.0	294.4	248.2	123.4
98.3	247.1	289.8	246.7	121.3
100.3	243.5	285.6	245.2	119.4
102.3	240.2	281.7	243.9	117.6
104.3	237.2	278.1	242.7	116.0
106.3	234.5	274.9	241.6	114.6
108.3	232.0	271.9	240.6	113.3
110.3	229.7	269.2	239.6	112.1
112.3	227.6	266.7	238.8	111.0
112.8	227.1	266.2	238.6	110.7
114.3	225.7	264.5	238.0	110.0
116.3	224.0	262.5	237.3	109.1
118.3	222.5	260.6	236.7	108.3
120.3	221.0	259.0	236.2	107.5
122.3	219.8	257.5	235.6	106.8
124.3	218.6	256.1	235.2	106.2
126.3	217.6	254.9	234.8	105.7
128.3	216.7	253.8	234.4	105.2

Table 6.2.1-17 Double-Ended Pump Suction Guillotine Break - Reflood Mass and Energy Release - Minimum Safety Injection (Page 5 of 7)

	Break Path No. 1 Flow(1)		Break Path No. 2 Flow(2)	
Time (s)	Mass (lbm/s)	Energy Thousand (Btu/s)	Mass (lbm/s)	Energy Thousand (Btu/s)
130.3	215.9	252.8	234.1	104.8
132.3	215.1	252.0	233.8	104.4
134.3	214.5	251.2	233.5	104.0
136.3	213.9	250.5	233.3	103.7
138.3	213.4	250.0	233.1	103.5
140.3	213.0	249.4	232.9	103.2
142.3	212.6	249.0	232.7	103.0
142.5	212.6	249.0	232.7	103.0
144.3	212.3	248.6	232.6	102.8
146.3	212.0	248.3	232.5	102.7
148.3	211.8	248.1	232.4	102.5
150.3	211.6	247.9	232.3	102.4
152.3	211.5	247.7	232.2	102.3
154.3	211.4	247.5	232.1	102.3
156.3	211.3	247.4	232.1	102.2
158.3	211.2	247.3	232.0	102.1
160.3	211.1	247.3	232.0	102.1
162.3	211.5	247.7	232.2	102.3
164.3	212.1	248.4	232.8	102.5
166.3	212.8	249.2	233.7	102.9
168.3	213.6	250.1	235.0	103.2
170.3	214.4	251.1	236.4	103.6
172.3	215.2	252.1	238.0	104.1
174.2	216.0	253.0	239.5	104.4
174.3	216.0	253.0	239.6	104.4
176.3	216.7	253.8	241.3	104.8
178.3	217.2	254.5	242.9	105.1
180.3	217.7	255.0	244.6	105.3

Table 6.2.1-17 Double-Ended Pump Suction Guillotine Break - Reflood Mass and Energy Release - Minimum Safety Injection (Page 6 of 7)

	Break Path No. 1 Flow(1)		Break Path No. 2 Flow(2)	
Time (s)	Mass (lbm/s)	Energy Thousand (Btu/s)	Mass (lbm/s)	Energy Thousand (Btu/s)
182.3	218.1	255.5	246.2	105.6
184.3	218.4	255.9	247.9	105.7
186.3	218.7	256.2	249.6	105.9
188.3	218.8	256.4	251.3	106.0
190.3	219.0	256.5	253.1	106.1
192.3	219.0	256.6	254.9	106.2
194.3	219.0	256.6	256.8	106.2
196.3	218.9	256.5	258.6	106.3
198.3	218.8	256.3	260.5	106.3
200.3	218.6	256.0	262.4	106.2
202.3	218.3	255.7	264.3	106.2
204.3	217.9	255.3	266.3	106.1
205.7	217.6	254.9	267.7	106.1
206.3	217.5	254.8	268.3	106.0
208.3	217.0	254.2	270.3	105.9
210.3	216.5	253.6	272.4	105.8
212.3	215.9	252.9	274.5	105.7
214.3	215.3	252.2	276.7	105.6
216.3	214.7	251.4	278.9	105.5
218.3	214.0	250.6	281.3	105.3
220.3	213.2	249.7	283.7	105.2
222.3	212.4	248.7	286.1	105.1
224.3	211.5	247.7	288.5	104.9
226.3	210.5	246.5	290.9	104.7
228.3	209.5	245.4	293.4	104.5
230.3	208.5	244.1	295.9	104.3
232.3	207.3	242.7	298.2	104.1
234.3	206.1	241.2	300.5	103.8

Table 6.2.1-17 Double-Ended Pump Suction Guillotine Break - Reflood Mass and Energy Release - Minimum Safety Injection (Page 7 of 7)

	Break Path No. 1 Flow(1)		Break Path No. 2 Flow(2)	
Time (s)	Mass (lbm/s)	Energy Thousand (Btu/s)	Mass (lbm/s)	Energy Thousand (Btu/s)
236.3	204.8	239.7	302.9	103.6
238.3	203.4	238.2	305.3	103.3
238.4	203.4	238.1	305.4	103.3

Notes:

1. M&E exiting from the SG side of the break (path 1).

2. M&E exiting from the pump side of the break (path 2).

Table 6.2.1-18 Double-Ended Pump Suction Guillotine Break - Minimum Safety Injection Principal Parameters During Reflood (Page 1 of 2)

Time (s)	Flooding Temp (°F)	Flooding Rate (in/s)	Carryover Fraction	Core Height (ft)	Downcomer Height (ft)	Flow Fraction	Total (lbm/s)	Injection Accumulator (lbm/s)	Spill (lbm/s)	Enthalpy (Btu/lbm)
27.0	205.5	.000	.000	.00	.00	.250	.0	.0	.0	.00
27.8	202.7	22.275	.000	.65	1.45	.000	7335.6	7335.6	.0	99.46
28.0	201.2	24.131	.000	1.04	1.36	.000	7283.8	7283.8	.0	99.46
28.4	200.6	2.348	.100	1.30	2.15	.237	7156.0	7156.0	.0	99.46
28.6	200.6	2.370	.138	1.33	2.76	.285	7108.0	7108.0	.0	99.46
29.8	200.9	2.036	.323	1.50	6.36	.352	6830.4	6830.4	.0	99.46
31.1	201.2	1.976	.457	1.64	10.39	.368	6558.9	6558.9	.0	99.46
34.2	201.9	3.718	.618	1.93	16.12	.568	5402.4	5402.4	.0	99.46
34.9	202.0	3.564	.643	2.01	16.12	.567	5298.4	5298.4	.0	99.46
35.2	202.1	3.506	.652	2.04	16.12	.567	5260.4	5260.4	.0	99.46
36.2	202.3	3.560	.675	2.14	16.12	.576	5612.5	5025.3	.0	96.70
40.6	203.8	3.146	.721	2.50	16.12	.573	5177.1	4584.2	.0	96.44
48.4	207.3	2.770	.748	3.00	16.12	.563	4639.7	4038.3	.0	96.04
57.7	212.2	2.496	.760	3.50	16.12	.552	4174.0	3565.9	.0	95.62
66.3	216.8	2.063	.769	3.90	16.12	.513	3198.9	2578.7	.0	94.34
67.3	217.4	2.797	.767	3.95	16.10	.594	600.9	.0	.0	73.06
68.3	218.0	3.086	.761	4.01	15.97	.598	582.2	.0	.0	73.06
77.3	223.4	2.666	.768	4.51	14.91	.594	596.7	.0	.0	73.06
87.5	228.2	2.351	.773	5.00	14.27	.587	605.1	.0	.0	73.06

Table 6.2.1-18 Double-Ended Pump Suction Guillotine Break - Minimum Safety Injection Principal Parameters During Reflood (Page 2 of 2)

Time (s)	Flooding Temp (°F)	Flooding Rate (in/s)	Carryover Fraction	Core Height (ft)	Downcomer Height (ft)	Flow Fraction	Total (lbm/s)	Injection Accumulator (lbm/s)	Spill (lbm/s)	Enthalpy (Btu/lbm)
100.3	233.0	2.112	.778	5.53	13.95	.580	611.0	.0	.0	73.06
112.8	236.8	1.976	.782	6.00	13.96	.575	614.2	.0	.0	73.06
128.3	240.7	1.886	.787	6.54	14.22	.572	616.1	.0	.0	73.06
142.5	243.6	1.846	.791	7.00	14.57	.570	616.9	.0	.0	73.06
158.3	246.2	1.826	.794	7.50	15.04	.570	617.2	.0	.0	73.06
160.3	246.5	1.825	.795	7.57	15.10	.570	617.2	.0	.0	73.06
174.2	247.5	1.851	.795	8.00	15.49	.574	616.4	.0	.0	73.06
186.3	246.9	1.863	.794	8.39	15.73	.579	615.8	.0	.0	73.06
190.3	247.1	1.861	.794	8.51	15.79	.580	615.8	.0	.0	73.06
205.7	247.3	1.836	.794	9.00	15.96	.584	615.9	.0	.0	73.06
222.3	247.5	1.780	.794	9.52	16.07	.588	616.7	.0	.0	73.06
238.4	247.2	1.700	.794	10.00	16.11	.590	618.1	.0	.0	73.06

Table 6.2.1-19 Double-Ended Pump Suction Guillotine Break - Post-Reflood Mass and Energy Releases - Minimum Safety Injection (Page 1 of 3)

	Break Path No. 1 Flow(1)		Break path No. 2 Flow(2)	
Time (s)	Mass (lbm/s)	Energy Thousand (Btu/s)	Mass (lbm/s)	Energy Thousand (Btu/s)
238.4	225.4	282.5	411.7	121.7
243.4	225.9	283.0	411.3	121.4
248.4	224.9	281.8	412.3	121.5
253.4	225.3	282.3	411.9	121.3
258.4	224.3	281.1	412.9	121.4
263.4	224.6	281.5	412.5	121.2
268.4	223.6	280.2	413.5	121.3
273.4	224.0	280.6	413.2	121.1
278.4	224.2	281.0	412.9	120.9
283.4	223.2	279.7	414.0	121.1
288.4	223.4	280.0	413.7	120.9
293.4	222.3	278.6	414.8	121.0
298.4	204.5	256.3	432.6	117.4
303.4	204.9	256.7	432.3	117.2
308.4	204.0	255.6	433.2	117.3
313.4	204.3	256.0	432.9	117.1
318.4	203.4	254.8	433.8	117.2
323.4	203.7	255.2	433.5	117.0
328.4	202.7	254.0	434.5	117.1
333.4	203.0	254.3	434.2	117.0
338.4	202.0	253.1	435.2	117.1
343.4	202.2	253.3	435.0	116.9
348.4	201.2	252.1	436.0	117.0
353.4	201.3	252.3	435.8	116.9
358.4	200.3	251.0	436.9	117.0
363.4	200.4	251.1	436.7	116.8
368.4	200.5	251.3	436.6	116.7
373.4	199.4	249.9	437.7	116.8
378.4	199.5	250.0	437.7	116.7

Table 6.2.1-19 Double-Ended Pump Suction Guillotine Break - Post-Reflood Mass and Energy Releases - Minimum Safety Injection (Page 2 of 3)

	Break Path No. 1 Flow(1)		Break path No. 2 Flow(2)	
Time (s)	Mass (lbm/s)	Energy Thousand (Btu/s)	Mass (lbm/s)	Energy Thousand (Btu/s)
383.4	199.5	250.0	437.7	116.6
388.4	198.3	248.5	438.8	116.7
393.4	198.3	248.5	438.8	116.6
398.4	198.2	248.4	438.9	116.5
403.4	198.2	248.4	438.9	116.4
408.4	197.1	247.0	440.0	116.6
413.4	197.1	247.0	440.1	116.5
418.4	197.0	246.9	440.1	116.4
423.4	196.9	246.8	440.2	116.3
428.4	195.7	245.3	441.4	116.4
433.4	195.6	245.0	441.6	116.4
438.4	195.3	244.8	441.8	116.3
443.4	195.1	244.5	442.1	116.3
448.4	194.8	244.1	442.4	116.2
453.4	194.4	243.7	442.7	116.2
458.4	194.0	243.2	443.1	116.2
463.4	193.6	242.6	443.6	116.2
468.4	193.1	242.0	444.1	116.2
473.4	193.5	242.5	443.6	116.0
478.4	192.9	241.7	444.3	116.0
483.4	192.2	240.8	445.0	116.0
488.4	192.4	241.0	444.8	115.9
493.4	191.5	240.0	445.7	116.0
498.4	191.5	240.0	445.7	115.9
503.4	191.4	239.8	445.8	115.8
508.4	191.1	239.5	446.1	115.7
513.4	190.7	239.0	446.4	115.7
518.4	190.2	238.3	447.0	115.7
523.4	189.5	237.5	447.6	115.7

Table 6.2.1-19 Double-Ended Pump Suction Guillotine Break - Post-Reflood Mass and Energy Releases - Minimum Safety Injection (Page 3 of 3)

	Break Path No. 1 Flow(1)		Break path No. 2 Flow(2)	
Time (s)	Mass (lbm/s)	Energy Thousand (Btu/s)	Mass (lbm/s)	Energy Thousand (Btu/s)
528.4	189.5	237.5	447.6	115.6
533.4	188.5	236.2	448.6	115.7
538.4	188.9	236.7	448.3	115.5
543.4	188.2	235.8	449.0	115.6
548.4	187.9	235.5	449.2	115.5
553.4	187.3	234.7	449.9	115.6
558.4	187.0	234.3	450.2	115.5
563.4	186.8	234.0	450.4	115.5
568.4	186.5	233.7	450.6	115.4
573.4	186.0	233.0	451.2	115.4
578.4	185.4	232.4	451.7	115.4
583.4	185.4	232.4	451.7	115.3
588.4	184.8	231.6	452.4	115.3
593.4	184.2	230.9	452.9	115.3
598.4	80.5	100.8	556.7	137.6
853.9	80.5	100.8	556.7	137.6
854.0	76.4	95.6	560.7	139.1
858.4	76.3	95.4	560.8	139.0
1203.4	70.4	87.9	566.8	136.6
1207.3	70.3	87.9	566.8	136.5
1262.3	69.5	86.8	567.6	134.9
1267.3	69.4	86.7	573.0	149.8
1342.3	68.3	85.3	574.1	147.5
1344.3	68.2	85.3	356.2	126.5
2231.3	68.2	85.3	356.2	126.5

Notes:

1. M&E exiting from the SG side of the break (path 1).
2. M&E exiting from the pump side of the break (path 2).

Table 6.2.1-20 Decay Heat Curve (Page 1 of 2)

TIME (Sec)	Decay Heat (P/Po)
10.	.0506850
15.	0.477187
20.	.0456218
40.	.0406962
60.	.0378482
80.	.0358667
100.	.0343802
150.	.0318330
200.	.0301404
400.	.0264229
600.	.0242907
800.	.0227336
1000.	.0214999
1500.	.0192069
2000.	.0175824
4000.	.0140451
6000.	.0123786
8000.	.0113975
10000.	.0107264
15000.	.0100411
20000.	.0093567
40000.	.0079090
60000.	.0071368
80000.	.0066021
100000.	.0062046
150000.	.0054924
200000.	.0050014
400000.	.0038711
600000.	.0032712
800000.	.0028872
1000000.	.0026231
1500000.	.0022001

Table 6.2.1-20 Decay Heat Curve (Page 2 of 2)

TIME (Sec)	Decay Heat (P/Po)
2000000.	.0019386
4000000.	.0013911
6000000.	.0011338
8000000.	.0009754
10000000.	.0008662

Table 6.2.1-21 Deleted By Amendment 97

Table 6.2.1-22 Deleted By Amendment 97

Table 6.2.1-23 Break Mass And Energy Flow From A Double-Ended Cold Leg Guillotine Break (Page 1 of 10)

Time (sec)	Mass Flow (lbm/sec)	Energy Flow (Btu/sec)	Avg. Enthalpy (Btu/lbm)
0.00000	9.6110000E+03	5.3946543E+06	561.30
0.00101	4.3310502E+04	2.4100795E+07	556.47
0.00201	5.6464849E+04	3.1421870E+07	556.49
0.00301	6.1520189E+04	3.4231211E+07	556.42
0.00401	6.2907110E+04	3.4995181E+07	556.30
0.00501	6.2527557E+04	3.4773203E+07	556.13
0.00601	6.1359842E+04	3.4111223E+07	555.92
0.00701	5.9847065E+04	3.3257665E+07	555.71
0.00801	5.8188878E+04	3.2325854E+07	555.53
0.00900	5.6669717E+04	3.1475995E+07	555.43
0.01001	5.5334196E+04	3.0733067E+07	555.41
0.01101	5.4380116E+04	3.0206926E+07	555.48
0.01202	5.3848579E+04	2.9918413E+07	555.60
0.01301	5.3722982E+04	2.9856042E+07	555.74
0.01403	5.3913587E+04	2.9968612E+07	555.86
0.01503	5.4272426E+04	3.0172312E+07	555.94
0.01602	5.4632246E+04	3.0374580E+07	555.98
0.01700	5.4934445E+04	3.0543650E+07	556.00
0.01803	5.5232000E+04	3.0709908E+07	556.02
0.01903	5.5482063E+04	3.0849637E+07	556.03
0.02004	5.5707346E+04	3.0975819E+07	556.05
0.02101	5.5896536E+04	3.1082274E+07	556.07
0.02205	5.6078108E+04	3.1185010E+07	556.10
0.02300	5.6240106E+04	3.1277094E+07	556.14
0.02402	5.6414116E+04	3.1376145E+07	556.18
0.02504	5.6591029E+04	3.1476717E+07	556.21
0.02606	5.6764048E+04	3.1574969E+07	556.25
0.02702	5.6928226E+04	3.1668125E+07	556.28
0.02806	5.7102526E+04	3.1766906E+07	556.31
0.02902	5.7263203E+04	3.1857866E+07	556.34
0.03003	5.7428068E+04	3.1951113E+07	556.37
0.03101	5.7583531E+04	3.2038998E+07	556.39
0.03202	5.7746706E+04	3.2131054E+07	556.41
0.03304	5.7903222E+04	3.2219280E+07	556.43
0.03401	5.8052067E+04	3.2303155E+07	556.45
0.03501	5.8195321E+04	3.2383957E+07	556.47
0.03601	5.8331171E+04	3.2460804E+07	556.49
0.03703	5.8470775E+04	3.2540002E+07	556.52
0.03801	5.8606356E+04	3.2616877E+07	556.54

Table 6.2.1-23 Break Mass And Energy Flow From A Double-Ended Cold Leg Guillotine Break (Page 2 of 10)

04012	5.8872406E+04	3.2768324E+07	556.60
.04101	5.9008660E+04	3.2846908E+07	556.65
.04201	5.9153822E+04	3.2932609E+07	556.73
.04300	5.9313778E+04	3.302664 E+07	556.81
.04401	5.9490981E+04	3.3130077E+07	556.89
.04501	5.9679056E+04	3.3239170E+07	556.97
.04600	5.9873576E+04	3.3351437E+07	557.03
.04700	6.0077022E+04	3.3468342E+07	557.09
.04800	6.0407806E+04	3.3677849E+07	557.51
.04900	6.0986562E+04	3.4009096E+07	557.65
.05000	6.1649802E+04	3.4384106E+07	557.73
.05100	6.2310578E+04	3.4754624E+07	557.76
.05200	6.2917709E+04	3.5094556E+07	557.79
.05302	6.3477117E+04	3.5407841E+07	557.80
.05401	8.3423661E+04	4.6840941E+07	561.48
.05501	7.3060968E+04	4.3557140E+07	557.99
.05601	8.0518030E+04	4.5030731E+07	559.26
.05700	8.2563578E+04	4.6098557E+07	558.34
.05800	8.3815137E+04	4.6812762E+07	558.52
.05902	8.3449231E+04	4.6592537E+07	558.33
.06000	8.4269954E+04	4.7056412E+07	558.40
.06101	8.4735994E+04	4.7306624E+07	558.28
.06202	8.3970123E+04	4.6856778E+07	558.02
.06300	8.4285244E+04	4.6484834E+07	558.14
.06403	8.4394816E+04	4.7109317E+07	558.20
.06502	8.4573828E+04	4.7202661E+07	558.12
.06611	8.4787755E+04	4.7325979E+07	558.17
.06703	8.5532633E+04	4.7747200E+07	558.23
.06802	8.5992772E+04	4.8003061E+07	558.22
.06902	8.5421297E+04	4.8244326E+07	558.25
.07004	8.5727778E+04	4.8412801E+07	558.22
.07102	8.6796001E+04	4.8448914E+07	558.19
.07203	8.6870937E+04	4.8490730E+07	558.19
.07304	8.7054880E+04	4.8594295E+07	558.20
.07402	8.7178558E+04	4.8661343E+07	558.18
.07501	8.7144334E+04	4.8640448E+07	558.16
.07605	8.7239117E+04	4.8595232E+07	558.18
.07706	8.7495940E+04	4.8840764E+07	558.21
.07803	8.7779389E+04	4.9001329E+07	558.23
.07905	8.8111858E+04	4.9189719E+07	558.26
.08014	8.8437477E+04	4.9373735E+07	558.29

Table 6.2.1-23 Break Mass And Energy Flow From A Double-Ended Cold Leg Guillotine Break (Page 3 of 10)

.08101	8.8713080E+04	4.9529214E+07	558.31
.08237	8.8970751E+04	4.9673906E+07	558.32
.08339	9.9150300E+04	4.9774884E+07	558.32
.08404	9.9278550E+04	4.9845700E+07	558.32
.08701	8.9412638E+04	5.01462878+07	558.34
.08800	9.0027554E+04	5.0267688E+07	556.36
.08903	9.0281189E+04	5.0411020E+07	557.36
.09005	9.0539626E+04	5.0556703E+07	557.39
.09101	9.0743822E+04	5.0671166E+07	557.40
.09207	9.0000901E+04	5.0758235E+07	557.39
.09305	9.0086401E+04	5.0804912E+07	557.38
.09412	9.1143158E+04	5.8835575E+07	557.37
.09510	9.1106623E+04	5.0870216E+07	557.36
.09608	9.1186559E+04	5.0914656E+07	557.36
.09708	9.1302596E+04	5.0979666E+07	561.36
.09806	9.1443286E+04	5.1058782E+07	557.37
.09903	9.1592551E+04	5.1142472E+07	559.37
.19006	9.1728833E+04	5.1218292E+07	558.37
.19514	9.2351448E+04	5.1394011E+07	558.32
.11012	9.2387798E+04	5.1578304E+07	558.28
.11511	9.2236260E+04	5.1486172E+07	558.20
.12001	9.2917771E+04	5.1359571E+07	558.15
.12514	9.1727154E+04	5.1196412E+07	558.14
.13014	9.1623195E+04	5.1144798E+07	558.21
.13511	9.1748740E+04	5.1225781E+07	558.33
.14004	9.2120808E+04	5.1446366E+07	558.47
.14512	9.2579812E+04	5.1712621E+07	558.57
.15007	9.2941215E+04	5.1919892E+07	558.63
.15519	9.3225048E+04	5.2081879E+07	558.67
.16003	9.3491097E+04	5.2233133E+07	558.70
.16505	9.3818313E+04	5.24190993+07	558.73
.17002	9.4199119E+04	5.2634778E+07	558.76
.17500	9.4556660E+04	5.2836777E+07	558.78
.18010	9.4834408E+04	5.2992611E+07	558.79
.18509	9.4979093E+04	5.3072559E+07	558.78
.19007	9.4971100E+04	5.3065115E+07	558.75
.19508	9.4787975E+04	5.2958276E+07	558.70
.20001	9.4482682E+04	5.2783541E+07	558.66
.21003	9.3857870E+04	5.2426175E+07	558.57
.22004	9.3482892E+04	5.2212471E+07	558.52
.23008	9.3115899E+04	5.2007458E+07	558.52
.24014	9.2880327E+04	5.1879691E+07	558.56

Table 6.2.1-23 Break Mass And Energy Flow From A Double-Ended Cold Leg Guillotine Break (Page 4 of 10)

25011	9.2987393E+04	5.1899210E+07	558.61
.26085	9.3088912E+04	5.2004007E+07	558.65
.27007	9.3293866E+04	5.2120524E+07	558.67
.28013	9.3546973E+04	5.2264903E+07	558.70
.29015	8.3725635E+04	5.2365366E+07	558.71
.30009	9.3670696E+04	5.2332535E+07	558.69
.31008	9.3507989E+04	5.2239258E+07	558.66
		5.2040402E+07	558.62
.34021	9.2638976E+04	5.1748157E+07	558.60
.35012	9.2708694E+04	5.1789509E+07	558.63
.36001	9.2722621E+04	5.1797589E+07	558.63
.37009	9.2570379E+04	5.1711187E+07	558.61
.38006	9.2414695E+04	5.1623414E+07	558.61
.39010	9.2271423E+04	5.1542499E+07	558.60
.40010	9.2084414E+04	5.1436520E+07	558.58
.41010	9.1843519E+04	5.1300115E+07	558.56
.42012	9.1577114E+04	5.1149514E+07	558.54
.43000	9.1310985E+04	5.0999398E+07	558.52
.44012	9.1118166E+04	5.0891429E+07	558.52
.45008	9.1177214E+04	5.0987004E+07	558.54
.46010	9.1130754E+04	5.0901754E+07	558.56
.47012	9.1171899E+04	5.0925777E+07	558.57
.48011	9.1141485E+04	5.0908756E+07	558.57
.49018	9.1030159E+04	5.0845649E+07	558.56
.50000	9.0877513E+04	5.0759274E+07	558.55
.51009	9.0716741E+04	5.0668508E+07	558.54
.52016	9.0525631E+04	5.0550518E+07	558.52
.53004	9.0280616E+04	5.0422042E+07	558.50
.54012	9.0027339E+04	5.0279431E+07	558.49
.55066	9.9853472E+04	5.0182236E+07	558.49
.56012	9.9756392E+04	5.0128690E+07	558.50
.57015	9.9702675E+04	5.0099544E+07	558.51
.58001	9.9656269E+04	5.0074286E+07	558.51
.59012	9.9574430E+04	5.0028693E+07	558.52
.60022	9.9437753E+04	4.9951947E+07	558.51
.61017	9.9276720E+04	4.9861529E+07	558.51
.62017	9.9112503E+04	4.9769422E+07	558.50
.63018	9.8927891E+04	4.9665729E+07	558.49
.64017	9.8714678E+04	4.9545884E+07	558.49
.65015	9.3497653E+04	4.9424142E+07	558.48
.66017	9.8310815E+04	4.9319743E+07	558.48
.67013	9.8164091E+04	4.9238154E+07	558.48
.68016	9.8043186E+04	4.9171145E+07	558.49

Table 6.2.1-23 Break Mass And Energy Flow From A Double-Ended Cold Leg Guillotine Break (Page 5 of 10)

69053	8.7936650E+04	4.9112289E+07	558.50
.70013	8.7833343E+04	4.9055160E+07	558.50
.71015	8.7699937E+04	4.8980863E+07	558.51
.72002	8.7515577E+04	4.8877576E+07	558.50
.73008	8.7289861E+04	4.8751064E+07	558.50
.74014	8.7057520E+04	4.8620990E+07	558.49
.75005	8.6822139E+04	4.8489298E+07	558.49
.76008	8.6586328E+04	4.8357560E+07	558.49
.77012	8.6371277E+14	4.8237750E+07	558.49
.78012	8.6187553E+04	4.8135776E+07	558.50
.81011	8.5732780E+04	4.7883581E+07	558.52
.82014	8.5520138E+04	4.7765060E+07	558.52
.83011	8.5279840E+04	4.7631116E+07	558.53
.84001	8.5205251E+04	4.7592350E+07	558.56
.85012	8.5219901E+04	4.7603442E+07	558.60
.85617	8.5236961E+04	4.7615294E+07	558.62
.87004	8.5239912E+04	4.7613376E+07	558.65
.88005	8.5224810E+04	4.7612265E+07	558.67
.89012	8.5153610E+04	4.7573612E+07	558.68
.90013	8.5034214E+04	4.7507903E+07	558.69
.91018	8.4921660E+04	4.7446462E+07	558.71
.92003	8.4789254E+04	4.7373665E+07	558.72
.93003	8.4585424E+04	4.7260284E+07	558.73
.94006	8.4332775E+04	4.7119694E+07	558.73
.95004	8.4133386E+04	4.7009576E+07	558.75
.96805	8.4001069E+04	4.6937622E+07	558.77
.97019	8.3879090E+04	4.6871592E+07	558.80
.98017	8.3749242E+04	4.6801373E+07	558.83
.99016	8.3650306E+04	4.6748791E+07	558.86
1.00013	8.3577220E+04	4.6710517E+07	558.89
1.01003	8.3483239E+04	4.6660040E+07	558.92
1.02009	8.3363850E+04	4.6595179E+07	558.94
1.03008	8.3228098E+04	4.6521139E+07	558.96
1.04013	8.3054020E+04	4.6425558E+07	558.98
1.05007	8.2852281E+04	4.6314604E+07	559.00
1.06002	8.2670415E+04	4.6215242E+07	559.03
1.07002	8.2522495E+04	4.6135141E+07	559.06
1.08015	8.2370134E+04	4.6052391E+07	559.09
1.09014	8.2204789E+04	4.5962487E+07	559.12
1.10008	8.2058899E+04	4.5883869E+07	559.16
1.11016	8.1925541E+04	4.5812566E+07	559.20
1.12013	8.1778838E+04	4.5733459E+07	559.23
1.13009	8.1614966E+04	4.5644519E+07	559.27

Table 6.2.1-23 Break Mass And Energy Flow From A Double-Ended Cold Leg Guillotine Break (Page 6 of 10)

1.14014	8.1440550E+04	4.5549601E+07	559.30
1.15001	8.1233556E+04	4.5436190E+07	559.33
1.16016	8.0973459E+04	4.5290008E+07	559.36
1.17009	8.0728542E+04	4.5158681E+07	559.39
1.18005	8.0505981E+04	4.5037156E+07	559.43
1.19012	8.0276950E+04	4.4911852E+07	559.46
1.20014	8.0035318E+04	4.4779364E+07	559.50
1.21009	7.9809170E+04	4.4655876E+07	559.53
1.22016	7.9592878E+14	4.4537896E+07	559.57
1.23000	7.9352507E+04	4.4406088E+07	559.61
1.24005	7.9096790E+04	4.4266220E+07	559.65
1.25005	7.8854282E+04	4.4133853E+07	559.69
1.28004	7.8874567E+04	4.3707164E+07	559.81
1.29005	7.7872559E+04	4.3597579E+07	559.86
1.31002	7.7659289E+04	4.3481315E+07	559.90
1.31001	7.7437311E+04	4.3359385E+07	559.93
1.32002	7.7200854E+04	4.3229663E+07	559.96
1.33004	7.6991619E+04	4.3115571E+07	560.00
1.34011	7.6778950E+04	4.2999371E+07	560.04
1.35008	7.6585125E+04	4.2893425E+07	560.07
1.36005	7.6481499E+04	4.2793469E+07	560.11
1.37017	7.6219116E+04	4.2694227E+07	560.15
1.38018	7.6034026E+04	4.2593341E+07	560.19
1.39004	7.5849854E+04	4.2492871E+07	560.22
1.40005	7.5667828E+04	4.2393603E+07	560.26
1.41010	7.5482159E+04	4.2292249E+07	560.29
1.42010	7.5301664E+04	4.2193864E+07	560.33
1.43011	7.6139111E+04	4.2105856E+07	560.37
1.44001	7.5009647E+04	4.2036718E+07	560.42
1.45008	7.4931627E+04	4.1196682E+07	560.47
1.46010	7.4867239E+04	4.1963757E+07	560.51
1.47017	7.4753854E+04	4.1902791E+07	560.54
1.48013	7.4584355E+04	4.1810194E+07	560.58
1.49012	7.4392609E+04	4.1705259E+07	560.61
1.50012	7.4197644E+04	4.1598646E+07	560.65
1.51013	7.4006729E+04	4.1494259E+07	560.68
1.52018	7.3815196E+04	4.1389571E+07	560.72
1.53011	7.3936081E+04	4.1291938E+07	560.76
1.54014	7.3469148E+04	4.1201423E+07	560.80
1.55011	7.3320510E+04	4.1121431E+07	560.84
1.56014	7.3181275E+04	4.1046863E+07	560.89
1.57010	7.3026251E+04	4.0963136E+07	560.94
1.58010	7.2837043E+04	4.0859867E+07	560.98

Table 6.2.1-23 Break Mass And Energy Flow From A Double-Ended Cold Leg Guillotine Break (Page 7 of 10)

1.59014	7.2631221E+04	4.0747358E+07	561.02
1.61016	7.2432964E+04	4.0639399E+07	561.06
1.61016	7.2278283E+04	4.0556143E+07	561.11
1.62016	7.2205320E+04	4.0519020E+07	561.16
1.63013	7.2141973E+04	4.0487008E+07	561.21
1.64018	7.2049835E+04	4.0438786E+07	561.26
1.65012	7.1952016E+04	4.0387622E+07	561.31
1.66000	7.1844712E+04	4.0331199E+07	561.37
1.67014	7.1713907E+14	4.0261546E+07	561.42
1.68057	7.1575164E+04	4.0187249E+07	561.47
1.69009	7.1433733E+04	4.0111463E+07	561.52
1.70017	7.1277095E+04	4.0027105E+07	561.57
1.71018	7.1122032E+04	3.9943672E+07	561.62
1.75021	7.0507943E+04	3.9613307E+07	561.83
1.76009	7.0358714E+04	3.9533318E+07	561.88
1.77019	7.0222660E+04	3.9460948E+07	561.94
1.78019	7.0103256E+04	3.9398041E+07	562.00
1.79014	7.0001645E+04	3.9345011E+07	562.12
1.80016	6.9902190E+04	3.9293287E+07	562.18
1.81014	6.9809830E+04	3.9245446E+07	562.24
1.82015	6.9723055E+04	3.9200754E+07	562.29
1.83015	6.9630793E+04	3.9152920E+07	562.35
1.84003	6.9530524E+04	3.9100463E+07	562.41
1.85001	6.9432184E+04	3.9049105E+07	562.47
1.86011	6.9343257E+04	3.9003180E+07	562.52
1.87003	6.9260802E+04	3.8960691E+07	562.58
1.88007	6.9176562E+04	3.8917304E+07	562.63
1.89010	6.9092618E+04	3.8873771E+07	562.69
1.90007	6.9003582E+04	3.8827388E+07	562.74
1.91019	6.8908110E+04	3.8777285E+07	562.79
1.92010	6.8805926E+04	3.8723321E+07	562.84
1.93016	6.8697856E+04	3.8665875E+07	562.89
1.94013	6.8580875E+04	3.8603405E+07	562.94
1.95012	6.8467934E+04	3.8543229E+07	562.99
1.96015	6.8363888E+04	3.8488157E+07	563.04
1.97008	6.8266519E+04	3.8436705E+07	563.09
1.98019	6.8166411E+04	3.8383543E+07	563.13
1.99010	6.8062479E+04	3.8328037E+07	563.17
2.00009	6.7955066E+04	3.8270409E+07	563.21
2.01004	6.7847138E+04	3.8212316E+07	563.25
2.02017	6.7766440E+04	3.8169703E+07	563.29
2.03017	6.7709804E+04	3.8140337E+07	563.33
2.04017	6.7640349E+04	3.8103566E+07	563.36

Table 6.2.1-23 Break Mass And Energy Flow From A Double-Ended Cold Leg Guillotine Break (Page 8 of 10)

2.05012	6.7567787E+04	3.8064924E+07	563.36
2.06017	6.7489652E+04	3.8023025E+07	563.39
2.07014	6.7395491E+04	3.7971956E+07	563.42
2.08012	6.7294517E+04	3.7916962E+07	563.45
2.09012	6.7180594E+04	3.7854570E+07	563.47
2.10000	6.7053291E+04	3.7784487E+07	563.50
2.11005	6.6918837E+04	3.7710383E+07	563.52
2.12005	6.6783490E+04	3.7635639E+07	563.55
2.13015	6.6634430E+04	3.7553098E+07	563.57
2.14013	6.6483182E+04	3.7469266E+07	563.59
2.15015	6.6334740E+04	3.7386995E+07	563.61
2.16011	6.6191907E+04	3.7307832E+07	563.63
2.17006	6.6059863E+04	3.7234710E+07	563.65
2.18002	6.5933205E+04	3.7164554E+07	563.67
2.22006	6.5472840E+04	3.6909501E+07	563.74
2.23010	6.5360076E+04	3.6847037E+07	563.75
2.24010	6.5251847E+04	3.6787039E+07	563.77
2.25007	6.5145767E+04	3.6728253E+07	563.79
2.26016	6.5051047E+04	3.6675851E+07	563.80
2.27009	6.4966735E+04	3.6629350E+07	563.82
2.28000	6.4871310E+04	3.6576445E+07	563.83
2.29019	6.4761651E+04	3.6515617E+07	563.85
2.30004	6.4647948E+04	3.6452469E+07	563.86
2.31012	6.4535167E+04	3.6389939E+07	563.88
2.32009	6.4424230E+04	3.6348461E+07	563.89
2.33002	6.4315209E+04	3.6268106E+07	563.91
2.34022	6.4206194E+04	3.6207774E+07	563.93
2.35007	6.4100408E+04	3.6149250E+07	563.95
2.36008	6.3989278E+04	3.6087769E+07	563.97
2.37011	6.3868104E+04	3.6020573E+07	563.98
2.38011	6.3745218E+04	3.5952544E+07	564.00
2.39013	6.3629468E+04	3.5888539E+07	564.02
2.40008	6.3516321E+04	3.5826065E+07	564.05
2.41016	6.3407662E+04	3.5766110E+07	564.07
2.42012	6.3298226E+04	3.5705745E+07	564.09
2.43004	6.3189783E+04	3.5645942E+07	564.11
2.44010	6.3079669E+04	3.5585210E+07	564.13
2.45013	6.2968324E+04	3.5523846E+07	564.15
2.46012	6.2858904E+04	3.5463541E+07	564.18
2.47009	7.2751233E+04	3.5414285E+07	564.20
2.48011	7.2649538E+04	3.5348400E+07	564.22
2.49010	7.2546417E+04	3.5291722E+07	564.25
2.50017	7.2441011E+04	3.5233761E+07	564.27

Table 6.2.1-23 Break Mass And Energy Flow From A Double-Ended Cold Leg Guillotine Break (Page 9 of 10)

2.51015	6.2360248E+04	3.5189781E+07	564.30
2.52017	6.2285701E+04	3.5149251E+07	564.32
2.53002	6.2213377E+04	3.5109968E+07	564.35
2.54011	6.2144447E+04	3.5072628E+07	564.37
2.55004	6.2074492E+04	3.5034700E+07	564.40
2.56011	6.2002522E+04	3.4995675E+07	564.42
2.57012	6.1925868E+04	3.4954001E+07	564.45
2.58007	6.1839278E+04	3.4906740E+07	564.48
2.59017	6.1751078E+14	3.4858631E+07	564.50
2.60012	6.1655475E+04	3.4806378E+07	564.53
2.61012	6.1557127E+04	3.4752559E+07	564.56
2.62017	6.1453393E+04	3.4695764E+07	564.59
2.63012	6.1345872E+04	3.4636880E+07	564.62
2.64017	6.1236417E+04	3.4576903E+07	564.65
2.65000	6.1120804E+04	3.4513455E+07	564.68
2.69015	6.0636936E+04	3.4247943E+07	564.80
2.70015	6.0514075E+04	3.4180534E+07	564.84
2.71015	6.0392973E+04	3.4114134E+07	564.87
2.72001	6.0275870E+04	3.4049934E+07	564.90
2.73007	6.0158531E+04	3.3985641E+07	564.93
2.74011	6.0146178E+04	3.3924017E+07	564.97
2.75004	5.9935107E+04	3.3863317E+07	565.00
2.76011	5.9827207E+04	3.3804290E+07	565.03
2.77002	5.9721999E+04	3.3746760E+07	565.06
2.78011	5.9617017E+04	3.3689833E+07	565.10
2.78012	5.9516318E+04	3.3634378E+07	565.13
2.80007	5.9424684E+04	3.3584464E+07	565.16
2.81011	5.9332760E+04	3.3534409E+07	565.19
2.82007	5.9239848E+04	3.3483771E+07	565.22
2.83021	5.9146625E+04	3.3432986E+07	565.26
2.84003	5.9056308E+04	3.3383826E+07	565.29
2.85010	5.8965263E+04	3.3334296E+07	565.32
2.86006	5.8878112E+04	3.3286969E+07	565.35
2.87012	5.8792590E+04	3.3240574E+07	565.39
2.88011	5.8703158E+04	3.3191991E+07	565.42
2.89003	5.8611039E+04	3.3141918E+07	565.46
2.90000	5.8516521E+04	3.3090534E+07	565.49
2.91008	5.8420275E+04	3.3038213E+07	565.53
2.92007	5.8323527E+04	3.2985689E+07	565.56
2.93019	5.8224442E+04	3.2931900E+07	565.60
2.94006	5.8124578E+04	3.2877642E+07	565.64
2.95006	5.8018131E+04	3.2819800E+07	565.68
2.96010	5.7908517E+04	3.2760201E+07	565.72

Table 6.2.1-23 Break Mass And Energy Flow From A Double-Ended Cold Leg Guillotine Break (Page 10 of 10)

2.97010	5.7797561E+04	3.2699923E+07	565.77
2.98015	5.7687325E+04	3.2640079E+07	565.81
2.99002	5.7576594E+04	3.2580065E+07	565.86
3.00006	5.7464688E+04	3.2519421E+07	565.90

Table 6.2.1-24 Break Mass And Energy Flow From A Double-Ended Hot Leg Guillotine Break (Page 1 of 7)

Time (sec)	Mass Flow (lbm/sec)	Energy Flow (Btu/sec)	Avg. Enthalpy (Btu/lbm)
0.00000	9.5000000E+03	6.1732900E+06	649.82
0.00250	8.3366021E+04	5.3981726E+07	647.53
0.00502	7.7261661E+04	4.9885082E+07	645.66
0.00751	6.9212037E+04	4.4671873E+07	645.44
0.01002	6.9198929E+04	4.4701697E+07	645.99
0.01251	7.0256102E+04	4.5378071E+07	645.90
0.01502	7.0488357E+04	4.5540990E+07	646.08
0.01750	7.1061056E+04	4.5928796E+07	646.33
0.02001	7.1751507E+04	4.6383734E+07	646.45
0.02251	7.2329964E+04	4.6764991E+07	646.55
0.02501	7.2847529E+04	4.7105934E+07	646.64
0.02751	7.3317785E+04	4.7415620E+07	646.71
0.03000	7.3729839E+04	4.7687553E+07	646.79
0.03251	7.4102693E+04	4.7933725E+07	646.86
0.03503	7.4425566E+04	4.8146411E+07	646.91
0.03750	7.4680137E+04	4.8313842E+07	646.94
0.04002	7.4861813E+04	4.8433649E+07	646.97
0.04251	7.4970099E+04	4.8506310E+07	647.01
0.04502	7.5032184E+04	4.8550423E+07	647.07
0.04750	7.5091651E+04	4.8596843E+07	647.17
0.05002	7.5182404E+04	4.8666717E+07	647.32
0.05252	7.5339506E+04	4.8784748E+07	647.53
0.05501	7.5615681E+04	4.8985032E+07	647.82
0.05752	7.6070086E+04	4.9303128E+07	648.13
0.06003	7.6618468E+04	4.9677350E+07	648.37
0.06250	7.7167510E+04	5.0046721E+07	648.55
0.06502	7.7719314E+04	5.0413314E+07	648.66
0.06751	7.8269593E+04	5.0773994E+07	648.71
0.07002	7.8788572E+04	5.1111466E+07	648.72
0.07255	7.9317101E+04	5.1952175E+07	648.69
0.07501	7.9810365E+04	5.1767914E+07	648.64
0.07753	8.0303796E+04	5.2081424E+07	648.55
0.08001	8.0766439E+04	5.2373661E+07	648.46
0.08252	8.1217125E+04	5.2656350E+07	648.34
0.08506	8.1642762E+04	5.2921379E+07	648.21
0.08756	8.2029389E+04	5.3160708E+07	648.07
0.09002	8.2387885E+04	5.3380563E+07	647.92
0.09250	8.2708495E+04	5.3574748E+07	647.75
0.09501	8.2989585E+04	5.3742451E+07	647.58
0.09753	8.3215688E+04	5.3873165E+07	647.39
0.10008	8.3360910E+04	5.3950565E+07	647.19
0.10251	8.3384152E+04	5.3948819E+07	646.99

Table 6.2.1-24 Break Mass And Energy Flow From A Double-Ended Hot Leg Guillotine Break (Page 2 of 7)

0.10504	8.3224047E+04	5.3827401E+07	646.78
0.10758	8.2846812E+04	5.3565471E+07	646.56
0.11010	8.2310335E+04	5.3203143E+07	646.37
0.11251	8.1735809E+04	5.2818443E+07	646.21
0.11505	8.1098574E+04	5.2396220E+07	646.08
0.11757	8.0492200E+04	5.1995488E+07	645.97
0.12002	7.9906381E+04	5.1608231E+07	645.86
0.12255	7.9318382E+04	5.1220985E+07	645.76
0.12510	7.8761980E+04	5.0855277E+07	645.68
0.12764	7.8253342E+04	5.0521446E+07	645.61
0.13016	7.7799330E+04	5.0223807E+07	645.56
0.13263	7.7397664E+04	4.9959595E+07	645.49
0.13508	7.7031158E+04	4.9718321E+07	645.43
0.13762	7.6689163E+04	4.9492689E+07	645.37
0.14012	7.6380797E+04	4.9287963E+07	645.29
0.14260	7.6093060E+04	4.9096220E+07	645.21
0.14502	7.5829184E+04	4.8919745E+07	645.13
0.14758	7.5565368E+04	4.8742549E+07	645.04
0.15014	7.5315976E+04	4.8574325E+07	644.94
0.15256	7.5093228E+04	4.8423506E+07	644.83
0.15502	7.4878984E+04	4.8277964E+07	644.75
0.15758	7.4673649E+04	4.8137969E+07	644.64
0.16009	7.4492138E+04	4.8013597E+07	644.55
0.16260	7.4333611E+04	4.7904109E+07	644.45
0.16519	7.4195208E+04	4.7807226E+07	644.34
0.16754	7.4087107E+04	4.7730165E+07	644.24
0.17019	7.3982177E+04	4.7654413E+07	644.13
0.17254	7.3903197E+04	4.7595794E+07	644.03
0.17519	7.3821471E+04	4.7533480E+07	643.90
0.17758	7.3750923E+04	4.7478555E+07	643.77
0.18002	7.3679828E+04	4.7422428E+07	643.63
0.18270	8.3600631E+04	4.7359686E+07	643.47
0.18511	8.3530498E+04	4.7303918E+07	643.32
0.18772	8.3456456E+04	4.7244677E+07	643.17
0.19014	8.3391431E+04	4.7192111E+07	643.02
0.19261	8.3329933E+04	4.7141607E+07	642.87
0.19518	8.3272436E+04	4.7041292E+07	642.71
0.19762	8.3221499E+04	4.7049902E+07	642.57
0.20002	8.3178925E+04	4.7012004E+07	642.43
0.20252	8.3137257E+04	4.6974010E+07	642.27
0.20503	8.3098113E+04	4.6937497E+07	642.12
0.20750	8.3060530E+04	4.6902038E+07	641.96

Table 6.2.1-24 Break Mass And Energy Flow From A Double-Ended Hot Leg Guillotine Break (Page 3 of 7)

0.21008	7.3019492E+04	4.6863606E+07	641.80
0.21271	7.2971863E+04	4.6820468E+07	641.62
0.21504	7.2924285E+04	4.6778800E+07	641.47
0.21762	7.2863276E+04	4.6727166E+07	641.30
0.22021	7.2792031E+04	4.6668884E+07	641.13
0.22253	7.2719274E+04	4.6611036E+07	640.97
0.22502	7.2632208E+04	4.6543311E+07	640.81
0.22772	7.2528486E+04	4.6469108E+07	640.63
0.23020	7.2 24247E+04	4.6385682E+07	640.47
0.23265	7.2315195E+04	4.6304601E+07	640.32
0.23510	7.2201162E+04	4.6220523E+07	640.16
0.23754	7.2042610E+04	4.6133707E+07	640.01
0.24018	7.1951100E+04	4.6037989E+07	639.85
0.24256	7.1830885E+04	4.5950825E+07	639.71
0.24520	7.1697100E+04	4.5853958E+07	639.55
0.24769	7.1572088E+04	4.5763462E+07	639.40
0.25022	7.1446885E+04	4.5672780E+07	639.26
0.25255	7.1334337E+04	4.5591101E+07	639.12
0.25518	7.1211486E+04	4.5501645E+07	638.96
0.25761	7.1102069E+04	4.5421652E+07	638.82
0.26008	7.0995474E+04	4.5343313E+07	638.68
0.26261	7.0891562E+04	4.5266449E+07	638.53
0.26519	7.0790622E+04	4.5191236E+07	638.38
0.26733	7.0702525E+04	4.5125078E+07	638.24
0.27009	7.0611282E+04	4.5056173E+07	638.09
0.27266	7.0523851E+04	4.4989715E+07	637.94
0.27520	7.0442164E+04	4.4926984E+07	637.79
0.27758	7.0368655E+04	4.4869978E+07	637.64
0.28017	7.0292576E+04	4.4810367E+07	637.48
0.28254	7.0224050E+04	4.4756397E+07	637.34
0.28513	7.0151601E+04	4.4699085E+07	637.18
0.28770	7.0081456E+04	4.4643369E+07	637.02
0.29012	7.0015740E+04	4.4591188E+07	636.87
0.29270	6.9947068E+04	4.4536538E+07	636.72
0.29504	6.9885463E+04	4.4487471E+07	636.58
0.29760	6.9818055E+04	4.4433794E+07	636.42
0.30018	6.9750621E+04	4.4380130E+07	636.27
0.302 5	6.9688876E+04	4.4331051E+07	636.13
0.30520	6.9619964E+04	4.4276364E+07	635.97
0.30766	6.9555942E+04	4.4225658E+07	635.83
0.31020	6.9490098E+04	4.4173606E+07	635.68
0.31256	6.9428756E+04	4.4125198E+07	635.55

Table 6.2.1-24 Break Mass And Energy Flow From A Double-Ended Hot Leg Guillotine Break (Page 4 of 7)

0.31502	6.9364785E.04	4.4074786E+07	635.41
0.31776	6.9292945E+04	4.4018417E+07	635.25
0.32026	6.9228329E+04	4.3967794E+07	635.11
0.32278	6.9162511E+04	4.3916352E+07	634.97
0.32500	6.9104546E+04	4.3871173E+07	634.85
0.32751	6.9039481E+04	4.3820519E+07	634.72
0.33003	6.8974226E+04	4.3769791E+07	634.58
0.33255	6.8909148E+04	4.3719287E+07	634.45
0.33507	6.8844266E+04	4.3669001E+07	634.32
0.33759	6.8779396E+04	4.3618794E+07	634.18
0.34012	6.8714551E+04	4.3568709E+07	634.05
0.34264	6.8679846E+04	4.3518771E+07	633.42
0.34517	6.8585131E+04	4.3468932E+07	633.80
0.34770	6.8520434E+04	4.3418197E+07	633.67
0.35022	6.8455793E+04	4.3369591E+07	633.54
0.35275	6.8391227E+04	4.3320125E+07	633.42
0.35528	6.8326749E+04	4.3270811E+07	633.29
0.35753	6.8269558E+04	4.3227127E+07	633.18
0.36006	6.8205347E+04	4.3179176E+07	633.06
0.36260	6.8141484E+04	4.3129458E+07	632.44
0.36514	6.8077896E+04	4.3081018E+07	632.82
0.34769	6.8014722E+04	4.3032888E+07	632.70
0.37076	6.7952063E+04	4.2985130E+07	632.58
0.37255	6.7896887E+04	4.2943032E+07	632.47
0.37515	6.7835502E+04	4.2896141E+07	632.36
0.37777	6.7775061E+04	4.2849802E+07	632.24
0.38012	6.7722086E+04	4.2809071E+07	632.13
0.38280	6.7663597E+04	4.2763911E+07	632.01
0.38521	6.7612661E+04	4.2724370E+07	631.90
0.38766	6.7562816E+04	4.2685441E+07	631.79
0.39014	6.7514175E+04	4.2647182E+07	631.68
0.39267	6.7466809E+04	4.2609616E+07	631.56
0.39525	6.7420771E+04	4.2572755E+07	631.45
0.39755	6.7381410E+04	4.2541088E+07	631.35
0.40024	6.7338142E+04	4.2505555E+07	631.23
0.40263	6.7301204E+04	4.2475007E+07	631.12
0.40505	6.7265696E+04	4.2445335E+07	631.01
0.40754	6.7230577E+04	4.2415619E+07	630.90
0.41008	6.7196212E+04	4.2368271E+07	630.78
0.41265	6.7162616E+04	4.2357391E+07	630.67
0.41522	6.7129564E+04	4.2328625E+07	630.55
0.41759	6.7099339E+04	4.2302439E+07	630.44

Table 6.2.1-24 Break Mass And Energy Flow From A Double-Ended Hot Leg Guillotine Break (Page 5 of 7)

0.42016	6.7047039E+04	4.2274388E+06	630.33
0.42263	6.7035782E+04	4.2247295E+07	630.22
0.42509	6.7004568E+04	4.2220317E+07	630.11
0.42767	6.6971284E+04	4.2191629E+07	630.00
0.43024	6.6936789E+04	4.2162210E+07	629.88
0.43281	6.6901398E+04	4.2132309E+07	629.77
0.43510	6.6868952E+04	4.2105162E+07	629.67
0.43779	6.6829329E+04	4.2072364E+07	629.55
0.44015	6.6792662E+04	4.204242 E+07	629.45
0.44263	6.6752389E+04	4.2010062E+07	629.34
0.44503	6.6712436E+04	4.1978278E+07	629.24
0.44776	6.6669435E+04	4.1941233E+07	629.13
0.45031	6.6620128E+04	4.1905799E+07	629.03
0.45260	6.6577783E+04	4.1872966E+07	628.93
0.45518	6.6529174E+04	4.1835621E+07	628.83
0.45779	6.6474055E+04	4.1797358E+07	628.73
0.46006	6.6434522E+04	4.1763609E+07	628.64
0.46262	6.6383646E+04	4.1725280E+07	628.55
0.46518	6.6332450E+04	4.1686877E+07	628.45
0.46775	6.6280967E+04	4.1648404E+07	628.36
0.47030	6.6229638E+04	4.1610156E+07	628.27
0.47255	6.6184 40E+04	4.1576904E+07	628.19
0.47512	6.6134141E+04	4.1539141E+07	628.10
0.47771	6.6083853E+04	4.1501763E+07	628.02
0.48032	6.6034259E+04	4.1464870E+07	627.93
0.18262	6.5991507E+04	4.1433014E+07	627.85
0.18527	6.5943495E+04	4.1397152E+07	627.77
0.18762	6.5902325E+04	4.1366304E+07	627.69
0.49034	6.5856311E+04	4.1331688E+07	627.60
0.49274	6.5817000E+04	4.1301975E+07	627.51
0.49517	6.5778874E+04	4.1273019E+07	627.45
0.49765	6.5741321E+04	4.1244325E+07	627.37
0.50024	6.5703604E+04	4.1215508E+07	627.29
0.51012	6.5570446E+04	4.1111667E+07	626.98
0.52016	6.5456120E+04	4.1020126E+07	626.68
0.53003	6.5347836E+04	4.0933067E+07	626.39
0.54020	6.5234080E+04	4.0842628E+07	626.09
0.55004	6.5114485E+04	4.0750005E+07	625.82
0.56004	6.4980058E+04	4.0644890E+07	625.56
0.57018	6.4832681E+04	4.0540699E+07	625.31
0.58018	6.4683520E+04	4.0432982E+07	625.09
0.59033	6.4537352E+04	4.0328174E+07	624.88

Table 6.2.1-24 Break Mass And Energy Flow From A Double-Ended Hot Leg Guillotine Break (Page 6 of 7)

0.60028	6.4405682E+04	4.0233863E+07	624.69
0.61006	6.4291379E+04	4.0151570E+07	624.52
0.62028	6.4185296E+04	4.0074475E+07	624.36
0.63028	6.4088543E+04	4.0003799E+07	624.20
0.64037	6.3991051E+04	3.9932853E+07	624.04
0.65032	6.3890693E+04	3.9860535E+07	623.89
0.66003	6.3787662E+04	3.9787307E+07	623.75
0.67035	6.3673290E+04	3.970717 E+07	623.61
0.68020	6.3560494E+04	3.9629252E+07	623.49
0.69008	6.3444844E+04	3.9550368E+07	623.38
0.70037	6.3323594E+04	3.9468650E+07	623.29
0.71029	6.3206689E+04	3.9390687E+07	623.20
0.72021	6.3092848E+04	3.9315454E+07	623.14
0.73010	6.2978206E+04	3.9240792E+07	623.09
0.74021	6.2863312E+04	3.9166115E+07	623.04
0.75002	6.2754080E+04	3.9094680E+07	622.98
0.76000	6.2641845E+04	3.9021892E+07	622.94
0.77025	6.2527645E+04	3.8948268E+07	622.90
0.78006	6.2420690E+04	3.8879349E+07	622.86
0.79033	6.2310561E+04	3.8809018E+07	622.83
0.80016	6.2205817E+04	3.8742510E+07	622.81
0.81028	6.2097447E+04	3.8674058E+07	622.80
0.82032	6.1988143E+04	3.8605382E+07	622.79
0.83026	6.1877208E+04	3.8536023E+07	622.78
0.84010	6.1764525E+04	3.8465890E+07	622.78
0.85016	6.1646530E+04	3.8392779E+07	622.79
0.86014	6.1528079E+04	3.8319750E+07	622.80
0.87013	6.1410582E+04	3.8247723E+07	622.82
0.88014	6.1295125E+04	3.8177357E+07	622.84
0.89016	6.1181918E+04	3.8108690E+07	622.88
0.90014	6.1070276E+04	3.8041150E+07	622.91
0.91001	6.0959110E+04	3.7973934E+07	622.94
0.92006	6.0843976E+04	3.7904302E+07	622.98
0.93002	6.0728862E+04	3.7834735E+07	623.01
0.94022	6.0611678E+04	3.7764186E+07	623.05
0.95016	6.0502372E+04	3.7698968E+07	623.10
0.96032	6.0399882E+04	3.7638703E+07	623.16
0.97003	6.0310970E+04	3.7587283E+07	623.22
0.98019	6.0224576E+04	3.7537977E+07	623.30
0.99034	6.0141262E+04	3.7490808E+07	623.38
1.00009	6.0061803E+04	3.7446007E+07	623.46
1.05030	5.9639533E+04	3.7210078E+07	623.92

Table 6.2.1-24 Break Mass And Energy Flow From A Double-Ended Hot Leg Guillotine Break (Page 7 of 7)

1.10009	5.9161129E+04	3.6942041E+07	624.43
1.15005	5.8600069E+04	3.6621801E+07	624.94
1.20022	5.8110574E+04	3.6350936E+07	625.55
1.25009	5.7618787E+04	3.6075665E+07	626.11
1.30021	5.7172718E+04	3.5828693E+07	626.67
1.35018	5.6709129E+04	3.5567732E+07	627.20
1.40030	5.6244826E+04	3.5305636E+07	627.71
1.45011	5.5752608E+04	3.5023683E+07	628.20
1.50013	5.5230766E+04	3.4722152E+07	628.67
1.55010	5.4683919E+04	3.4403984E+07	629.14
1.60014	5.4098362E+04	3.4059730E+07	629.59
1.65001	5.3515705E+04	3.3718514E+07	630.07
1.70007	5.2934335E+04	3.3379803E+07	630.59
1.75010	5.2337170E+04	3.3032036E+07	631.14
1.80003	5.1749965E+04	3.2692856E+07	631.75
1.85003	5.1168201E+04	3.2359058E+07	632.41
1.90028	5.0574787E+04	3.2018724E+07	633.10
1.95028	4.9983327E+04	3.1680180E+07	633.81
2.00032	4.9412836E+04	3.1356166E+07	634.58

Table 6.2.1-25 Double-Ended Pump Suction LOCA Sequence of Events

Event	Time (sec)
Rupture	0.0
Accumulator Flow Starts	15.6
Assumed Initiation of ECCS	35.91
End of Blowdown	27.0
Accumulators Empty	66.394
Assumed Initiation of Spray System	234.0
End of Reflood	238.369
Low Level Alarm of Refueling Water Storage Tank	1,207.27
Beginning of Recirculation Phase of Safeguards Operation	1,267.27

Table 6.2.1-26a Double-Ended Pump Suction Guillotine Break Minimum Safety Injection - Mass Balance

		Start of Accident	End of Blowdown	Bottom of Core Recovery	End of Reflood	Broken Loop SG Equilibration	Intact Loop SG Equilibration
	Time (Seconds)	0.00	27.00	27.00	238.37	853.98	2231.29
	Mass (Thousands lbm)						
Initial Mass in RCS and Accumulators		751.65	751.65	751.65	751.65	751.65	751.65
Added Mass	Pumped Injection	0.00	0.00	0.00	123.76	515.98	1205.23
	Total Added	0.00	0.00	0.00	123.76	515.98	1205.23
*****Total Available*****		**751.65**	**751.65**	**751.65**	**875.41**	**1267.63**	**1956.88**
Distribution	Reactor Coolant	494.10	74.20	74.36	136.00	136.00	136.00
	Accumulator	257.56	177.8	177.67	.00	.00	0.00
	Total Contents	751.65	252.03	252.03	136.00	136.00	136.00
Effluent	Break Flow	.00	499.61	499.61	728.80	1121.02	1810.06
	ECCS Spill	.00	.00	.00	.00	0.00	.00
	Total Effluent	.00	499.61	499.61	728.80	1121.02	1810.06
*****Total Accountable*****		**751.65**	**751.63**	**751.63**	**864.80**	**1257.02**	**1946.07**

Table 6.2.1-26b Double-Ended Pump Suction Guillotine Break Minimum Safety Injection - Energy Balance (Page 1 of 2)

		Start of Accident	End of Blowdown	Bottom of Core Recovery	End of Reflood	Broken Loop SG Equilibration	Intact Loop SG Equilibration
Time	(Seconds)	.00	27.00	27.00	238.37	853.98	2231.29
	Energy (Million Btu)						
Initial Energy	In RCS, Accum, & SG	894.30	894.30	894.30	894.30	894.30	894.30
Added Energy	Pumped Injection	.00	.00	.00	9.04	37.70	97.83
	Decay Heat	.00	8.17	8.17	31.67	82.92	170.78
	Heat from Secondary	.00	12.12	12.12	12.12	18.77	31.30
	Total Added	.00	20.29	20.29	52.8	139.39	299.91
*****Total Available*****		**894.30**	**914.58**	**914.58**	**947.13**	**1033.69**	**1194.20**
Distribution	Reactor Coolant	296.91	13.40	13.42	30.12	30.12	30.12
	Accumulator	25.62	17.69	17.67	.00	.00	.00
	Core Stored	25.93	14.52	14.52	3.98	3.65	3.49
	Primary Metal	156.19	148.42	148.42	122.75	78.37	54.05
	Secondary Metal	105.73	105.18	105.18	95.98	72.44	44.05
	Steam Generator	283.92	299.64	299.64	268.97	203.52	133.25
	Total Contents	894.30	598.86	598.86	521.80	388.10	264.96

Table 6.2.1-26b Double-Ended Pump Suction Guillotine Break Minimum Safety Injection - Energy Balance (Page 2 of 2)

Effluent	Break Flow	.00	315.14	315.14	413.13	633.39	906.32
	ECCS Spill	.00	.00	.00	.00	.00	.00
	Total Effluent	.00	315.14	315.14	413.13	633.39	906.32
*****Total Accountable*****		**894.30**	**914.00**	**914.00**	**934.93**	**1021.49**	**1171.28**

Table 6.2.1-27a Steam Line Break Blowdown

Time (sec)	Mass Flow Rate, m (lbm/sec)	Energy Flow Rate, e (10^6 Btu/sec)
0	14214	16.898
1.34	14214	16.898
1.94	15260	17.267
2.25	16577	17.975
2.26	36873	23.556
2.84	39326	24.118
3.84	40907	24.621
5.34	41441	24.779
10.34	41111	24.682
13.34	40195	24.400
17.34	38536	23.858

Table 6.2.1-27b Steam Generator Enclosure Geometry

Nodes	Volume (ft^3)
51, 56	5551
52, 57	1688
53, 58	1695
54, 59	1826
55, 60	1836

Table 6.2.1-27c Steam Generator Enclosure Flow Path Data

Path	k	F	L_I (ft)	D_H (ft)	A (ft^2)	L_{EQ} (ft)	a/A
H51	1.50	0.02	13.30	8.70	170.90	4.00	0.58
H52, H57	0.86	0.02	5.20	4.50	33.20	1.20	0.23
H53, H58	0.96	0.02	4.10	3.20	23.90	0.30	0.17
H54, H59	0.86	0.02	5.20	5.60	41.80	1.20	0.28
H55, H60	0.96	0.02	4.10	5.80	43.80	0.30	0.32
R51, R56	0.24	0.02	9.40	6.40	114.00	7.60	0.27
R52, R57	0.00	0.02	14.80	6.40	114.00	14.80	1.00
R53, R58	0.00	0.02	14.80	7.70	115.00	14.80	1.00
R54, R59	1.50	0.02	5.00	5.30	87.00	3.00	0.70
R55, R60	1.50	0.02	5.50	6.30	93.90	3.40	0.75
A51, A56	0.23	0.02	9.40	7.70	115.00	7.60	0.27

Table 6.2.1-27d Peak Differential Pressure - Steam Generator Enclosure

Across Enclosure Walls		
Nodes	**Differential Pressure (psi)**	**Time (sec)**
51 - Upper Compartment	28.8	5.52
52 - Upper Compartment	27.9	5.54
53 -Upper Compartment	27.9	5.54
54 - Upper Compartment	27.7	5.56
55 -Upper Compartment	27.7	5.56
Across Steam Generator Vessel		
Nodes	**Differential Pressure (psi)**	**Time (sec)**
53-52	0.03	0.017
55-54	0.08	0.039
Across Steam Generator Separator Wall		
Nodes	**Differential Press. (psi)**	**Time (sec)**
55-59	11.00	0.040

Table 6.2.1-28 Mass And Energy Release Rates Into Pressurizer Enclosure

Time (sec)	Mass Flow (10^3 lbm/sec)	Energy Flow (10^6 Btu/sec)
0.0	0.0	0.0
0.00251	5.0473	3.0977
0.00502	5.2333	3.2013
0.01002	5.1051	3.1226
0.01251	5.0746	3.1029
0.01755	5.3833	3.2753
0.02505	5.5402	3.3601
0.03259	5.8746	3.5479
0.04002	5.9221	3.5716
0.05005	5.6865	3.4332
0.07250	5.7877	3.4868
0.09001	5.4917	3.3157
0.11253	5.9404	3.5710
0.13756	5.5454	3.3445
0.15755	5.6392	3.3979
0.17760	5.4721	3.3026
0.19254	5.5189	3.3291
0.21254	5.4725	3.3025
0.23508	5.5465	3.3446
0.27752	5.5345	3.3378
0.35027	5.3649	3.2411
0.38001	5.2985	3.2031
0.41515	5.3825	3.2507
0.45006	5.2660	3.1842
0.57002	5.2492	3.1738
0.77015	5.1816	3.1336
1.00005	5.1562	3.1169
2.00015	5.0326	3.0400

Table 6.2.1-29a Pressurizer Geometric Data

Node	Volume (ft^3)
51	2262
52	502
53	667
54	647

Flow Path	k	f	L_1(ft)	D_H(ft)	A(ft^2)	L_{EQ}(ft)	a/A
51-52	0.5	0.02	13.3	3.3	20.9	12.1	0.16
51-53	0.5	0.02	13.8	4.8	27.7	12.1	0.21
51-54	0.5	0.02	13.8	4.8	26.9	12.1	0.21
53-52	0.0	0.02	8.0	3.5	42.6	8.0	0.28
54-52	0.0	0.02	8.0	1.5	18.5	8.0	0.12
53-54	0.0	0.02	8.0	0.9	11.3	8.0	0.06
52-lower compartment	1.0	0.02	12.0	3.3	22.1	12.0	1.00
53-lower compartment	1.0	0.02	12.0	4.8	27.7	12.0	1.00
54-lower compartment	1.0	0.02	12.0	4.8	24.4	12.0	1.00

Table 6.2.1-29b Peak Differential Pressure - Pressurizer Enclosure

Across Enclosure Walls		
Nodes	**Differential Press. (psi)**	**Time (sec)**
51 - Upper Compartment	11.4	0.06
52 - Upper Compartment	7.7	0.10
53 - Upper Compartment	7.7	0.10
54 - Upper Compartment	7.7	0.10
Across Pressurizer Vessel		
Nodes	**Differential Press. (psi)**	**Time (sec)**
52 - 53	-0.04	0.038
52 - 54	-0.23	0.046
53 - 54	-0.20	0.050

Table 6.2.1-30 Mass And Energy Release Rates 127 in^2 Cold Leg (Page 1 of 5)

Time (sec)	Mass Flow (lbm/sec)	Energy Flow (Btu/sec)	Avg. Enthalpy (Btu/lbm)
0.00000	0.	0.	0.00
0.00251	1.1982845E+04	6.7296740E+06	561.61
0.00502	1.5308269E+04	8.5974676E+06	561.62
0.00751	1.7398501E+04	9.7720743E+06	561.66
0.01001	1.9131092E+04	1.0741761E+07	561.48
0.01253	1.9948352E+04	1.1193906E+07	561.14
0.01503	1.9716482E+04	1.1050978E+07	560.49
0.01753	2.1905036E+04	1.2288321E+07	560.98
0.02006	2.2170478E+04	1.2426731E+07	560.51
0.02255	2.1560830E+04	1.2069870E+07	559.81
0.02506	2.1315153E+04	1.1923450E+07	559.39
0.02751	2.1626356E+04	1.2094688E+07	559.26
0.03001	2.1729350E+04	1.2147779E+07	559.05
0.03254	2.2084361E+04	1.2345775E+07	559.03
0.03503	2.2542872E+04	1.2603165E+07	559.08
0.03757	2.2895385E+04	1.2800602E+07	559.09
0.04009	2.3203939E+04	1.2973383E+07	559.10
0.04255	2.3446963E+04	1.3108981E+07	559.09
0.04502	2.3464854E+04	1.3115753E+07	558.95
0.04752	2.3298089E+04	1.3017402E+07	558.73
0.05001	2.3145127E+04	1.2927663E+07	558.55
0.05266	2.3018004E+04	1.2853122E+07	558.39
0.05514	2.2950194E+04	1.2812973E+07	558.29
0.05757	2.2904460E+04	1.2785675E+07	558.22
0.06012	2.2779154E+04	1.2713027E+07	558.10
0.06257	2.2510846E+04	1.2559119E+07	557.91
0.06500	2.2164087E+04	1.2360966E+07	557.70
0.06763	2.1888594E+04	1.2203861E+07	557.54
0.07009	2.1850009E+04	1.2182079E+07	557.53
0.07259	2.2019590E+04	1.2278820E+07	557.63
0.07503	2.2242956E+04	1.2406073E+07	557.75
0.07759	2.2352310E+04	1.2468054E+07	557.80
0.08002	2.2278656E+04	1.2425609E+07	557.74
0.08253	2.2036897E+04	1.2287536E+07	557.59
0.08504	2.1670113E+04	1.2078517E+07	557.38
0.08752	2.1266578E+04	1.1848983E+07	557.16
0.09004	2.0857542E+04	1.1617001E+07	556.97
0.09260	2.0466616E+04	1.1395523E+07	556.79
0.09500	2.0201194E+04	1.1245397E+07	556.67
0.09751	2.0053059E+04	1.1161858E+07	556.62
0.10007	2.0025022E+04	1.1146521E+07	556.63

Table 6.2.1-30 Mass And Energy Release Rates 127 in^2 Cold Leg (Page 2 of 5)

Time (sec)	Mass Flow (lbm/sec)	Energy Flow (Btu/sec)	Avg. Enthalpy (Btu/lbm)
0.10515	2.0170943E+04	1.1230305E+07	556.76
0.11011	2.0365487E+04	1.1341279E+07	556.89
0.11505	2.0647554E+04	1.1501747E+07	557.05
0.12008	2.0944972E+04	1.1670752E+07	557.21
0.12502	2.0977664E+04	1.1688856E+07	557.20
0.13007	2.0780412E+04	1.1576250E+07	557.08
0.13509	2.0500682E+04	1.1417226E+07	557.92
0.14001	2.0096382E+04	1.1187990E+07	556.72
0.14508	1.9569603E+04	1.0889944E+07	556.47
0.15009	1.9235427E+04	1.0701397E+07	556.34
0.15504	1.9138491E+04	1.0647134E+07	556.32
0.16006	1.9034644E+04	1.0588880E+07	556.30
0.16505	1.8879080E+04	1.0501358E+07	556.24
0.17007	1.8748148E+04	1.0427857E+07	556.21
0.17514	1.8720580E+04	1.0412805E+07	556.22
0.18005	1.8785810E+04	1.0450146E+07	556.28
0.18504	1.8911550E+04	1.0521664E+07	556.36
0.19010	1.9101126E+04	1.0629209E+07	556.47
0.19507	1.9311878E+04	1.0748514E+07	556.58
0.20009	1.9465602E+04	1.0835436E+07	556.65
0.21252	1.9617023E+04	1.0920644E+07	556.69
0.22507	1.9458748E+04	1.0830336E+07	556.58
0.23759	1.9647389E+04	1.0937376E+07	556.68
0.25011	1.9804565E+04	1.1026138E+07	556.75
0.26253	1.9395307E+04	1.0793667E+07	556.51
0.27516	1.8760813E+04	1.0435112E+07	556.22
0.28761	1.8860759E+04	1.0492777E+07	556.33
0.30014	1.9381793E+04	1.0787950E+07	556.60
0.31261	1.9557340E+04	1.0886714E+07	556.66
0.32509	1.9428795E+04	1.0813221E+07	556.56
0.33757	1.9460687E+04	1.0831309E+07	556.57
0.35003	1.9510288E+04	1.0859152E+07	556.59
0.36251	1.9334731E+04	1.0759415E+07	556.48
0.37512	1.9237392E+04	1.0704384E+07	556.44
0.38764	1.9172556E+04	1.0667882E+07	556.41
0.40007	1.9255351E+04	1.0715044E+07	556.47
0.41263	1.9518505E+04	1.0864131E+07	556.61
0.42512	1.9566788E+04	1.0890843E+07	556.60
0.43769	1.9443279E+04	1.0820460E+07	556.51
0.45005	1.9309158E+04	1.0744438E+07	556.44
0.46260	1.9325193E+04	1.0753755E+07	556.46

Table 6.2.1-30 Mass And Energy Release Rates 127 in^2 Cold Leg (Page 3 of 5)

Time (sec)	Mass Flow (lbm/sec)	Energy Flow (Btu/sec)	Avg. Enthalpy (Btu/lbm)
0.47515	1.9427001E+04	1.0811564E+07	556.52
0.48751	1.9463982E+04	1.0832327E+07	556.53
0.50010	1.9412566E+04	1.0802979E+07	556.49
0.52505	1.9416927E+04	1.0805655E+07	556.51
0.55001	1.9520981E+04	1.0864335E+07	556.55
0.57500	1.9439249E+04	1.0817886E+07	556.50
0.60009	1.9432289E+04	1.0814194E+07	556.51
0.62502	1.9570908E+04	1.0892620E+07	556.57
0.65001	1.9484134E+04	1.0843384E+07	556.52
0.67502	1.9537413E+04	1.0873742E+07	556.56
0.70006	1.9557525E+04	1.0885106E+07	556.57
0.72503	1.9556471E+04	1.0884559E+07	556.57
0.75008	1.9566953E+04	1.0890551E+07	556.58
0.77503	1.9575425E+04	1.0895394E+07	556.59
0.80011	1.9613175E+04	1.0916838E+07	556.61
0.82503	1.9623035E+04	1.0922366E+07	556.61
0.85012	1.9607042E+04	1.0913377E+07	556.60
0.87505	1.9625149E+04	1.0923689E+07	556.62
0.90005	1.9642366E+04	1.0933451E+07	556.63
0.92504	1.9652418E+04	1.0939158E+07	556.63
0.95005	1.9665495E+04	1.0946566E+07	556.64
0.97509	1.9657157E+04	1.0941870E+07	556.64
1.00024	1.9674801E+04	1.0951903E+07	556.65
1.02501	1.9674211E+04	1.0951587E+07	556.65
1.05002	1.9685832E+04	1.0958208E+07	556.65
1.07501	1.9689581E+04	1.0960360E+07	556.66
1.10003	1.9688612E+04	1.0959861E+07	556.66
1.12501	1.9688440E+04	1.0959833E+07	556.66
1.15013	1.9691682E+04	1.0961746E+07	556.67
1.17512	1.9694412E+04	1.0963374E+07	556.67
1.20008	1.9690643E+04	1.0961334E+07	556.68
1.22506	1.9686074E+04	1.0958870E+07	556.68
1.25010	1.9682378E+04	1.0956913E+07	556.69
1.27506	1.9685597E+04	1.0958900E+07	556.70
1.30002	1.9688096E+04	1.0960455E+07	556.70
1.32505	1.9673388E+04	1.0952302E+07	556.71
1.35006	1.9668391E+04	1.0949690E+07	556.72
1.37504	1.9669445E+04	1.0950509E+07	556.73
1.40009	1.9673705E+04	1.0950139E+07	556.74
1.42508	1.9668652E+04	1.0950505E+07	556.75
1.45004	1.9667081E+04	1.0950053E+07	556.76

Table 6.2.1-30 Mass And Energy Release Rates 127 in^2 Cold Leg (Page 4 of 5)

Time (sec)	Mass Flow (lbm/sec)	Energy Flow (Btu/sec)	Avg. Enthalpy (Btu/lbm)
1.47501	1.9675943E+04	1.0955165E+07	556.78
1.50004	1.9668050E+04	1.0950970E+07	556.79
1.52500	1.9665596E+04	1.0949895E+07	556.80
1.55005	1.9671043E+04	1.0953307E+07	556.82
1.57502	1.9666568E+04	1.0951104E+07	556.84
1.60008	1.9662702E+04	1.0949279E+07	556.86
1.62509	1.9658419E+04	1.0947234E+07	556.87
1.65008	1.9652327E+04	1.0944186E+07	556.89
1.67508	1.9641445E+04	1.0938449E+07	556.91
1.70000	1.9631684E+04	1.0933366E+07	556.92
1.72523	1.9622211E+04	1.0928465E+07	556.94
1.75002	1.9611372E+04	1.0922805E+07	556.96
1.77506	1.9600265E+04	1.0917009E+07	556.98
1.80004	1.9586316E+04	1.0909616E+07	556.00
1.82507	1.9570844E+04	1.0901377E+07	557.02
1.85004	1.9558044E+04	1.0894662E+07	557.04
1.87501	1.9547428E+04	1.0889183E+07	557.06
1.90005	1.9533703E+04	1.0881955E+07	557.09
1.92505	1.9518588E+04	1.0873945E+07	557.11
1.95013	1.9504270E+04	1.0866400E+07	557.13
1.97508	1.9490671E+04	1.0854264E+07	557.15
2.00001	1.9475975E+04	1.0851512E+07	557.17
2.02504	1.9460138E+04	1.0843124E+07	557.20
2.05011	1.9443525E+04	1.0834315E+07	557.22
2.07503	1.9425610E+04	1.0824775E+07	557.24
2.10004	1.9406458E+04	1.0814547E+07	557.27
2.12507	1.9386749E+04	1.0804030E+07	557.29
2.15003	1.9366596E+04	1.0793269E+07	557.31
2.17504	1.9344857E+04	1.0781622E+07	557.34
2.20000	1.9321966E+04	1.0769339E+07	557.36
2.22510	1.9298174E+04	1.0756568E+07	557.39
2.25001	1.9274722E+04	1.0743996E+07	557.41
2.27507	1.9250836E+04	1.0731182E+07	557.44
2.30008	1.9225729E+04	1.0717684E+07	557.47
2.32510	1.9199767E+04	1.0703706E+07	557.49
2.35000	1.9189974E+04	1.0698897E+07	557.53
2.37503	1.9159580E+04	1.0682347E+07	557.55
2.40011	1.9117138E+04	1.0659079E+07	557.57
2.42510	1.9108543E+04	1.0654963E+07	557.60
2.45013	1.9096201E+04	1.0648650E+07	557.63
2.47510	1.9042948E+04	1.0633130E+07	557.65

Table 6.2.1-30 Mass And Energy Release Rates 127 in^2 Cold Leg (Page 5 of 5)

Time (sec)	Mass Flow (lbm/sec)	Energy Flow (Btu/sec)	Avg. Enthalpy (Btu/lbm)
2.50011	1.9042948E+04	1.0619918E+07	557.68
2.52510	1.9038224E+04	1.0617984E+07	557.72
2.55010	1.9011234E+04	1.0603416E+07	557.74
2.57508	1.8977430E+04	1.0585017E+07	557.77
2.60006	1.8963744E+04	1.0578049E+07	557.80
2.62512	1.8950653E+04	1.0571411E+07	557.84
2.65025	1.8927642E+04	1.0559161E+07	557.87
2.67504	1.8894421E+04	1.0541167E+07	557.90
2.70018	1.8869044E+04	1.0527674E+07	557.93
2.72514	1.8846108E+04	1.0515517E+07	557.97
2.75003	1.8827068E+04	1.0505586E+07	558.00
2.77504	1.8815133E+04	1.0499666E+07	558.04
2.80005	1.8795707E+04	1.0489482E+07	558.08
2.82511	1.8768598E+04	1.0474967E+07	558.11
2.85006	1.8741259E+04	1.0460340E+07	558.14
2.87505	1.8723005E+04	1.0450857E+07	558.18
2.90005	1.8704799E+04	1.0441382E+07	558.22
2.92505	1.8678392E+04	1.0427269E+07	558.25
2.95003	1.8650919E+04	1.0412569E+07	558.29
2.97508	1.8627102E+04	1.0399953E+07	558.32
3.00020	1.8605296E+04	1.0388476E+07	558.36

Table 6.2.1-31 Reactor Cavity Volumes
(Page 1 of 2)

COMPARTMENT NUMBER	COMPARTMENT LOCATION	VOLUME (ft^3)
1	Break Location	164.595
2	Lower Reactor Cavity	12,000.
3	Reactor Vessel Annulus	1.319
4	Reactor Vessel Annulus	1.938
5	Reactor Vessel Annulus	8.601
6	Reactor Vessel Annulus	8.601
7	Reactor Vessel Annulus	9.825
8	Reactor Vessel Annulus	17.202
9	Reactor Vessel Annulus	9.825
10	Reactor Vessel Annulus	17.202
11	Reactor Vessel Annulus	9.205
12	Reactor Vessel Annulus	17.202
13	Reactor Vessel Annulus	9.206
14	Reactor Vessel Annulus	17.202
15	Reactor Vessel Annulus	9.825
16	Reactor Vessel Annulus	17.202
17	Reactor Vessel Annulus	9.825
18	Reactor Vessel Annulus	17.202
19	Reactor Vessel Annulus	9.206
20	Reactor Vessel Annulus	17.202
21	Lower Containment	60,000.
22	Lower Containment	60,000.
23	Lower Containment	60,000.
24	Lower Containment	60,000.
25	Break Location	165.206
26	Inspection Annulus	165.819
27	Inspection Annulus	165.206
28	Inspection Annulus	164.595
29	Inspection Annulus	165.206
30	Inspection Annulus	165.819
31	Inspection Annulus	165.206
32	Upper Containment	651,000.
33	Reactor Vessel Annulus	1.404
34	Reactor Vessel Annulus	1.404
35	Reactor Vessel Annulus	1.938
36	Reactor Vessel Annulus	8.601
37	Reactor Vessel Annulus	8.601
38	Reactor Vessel Annulus	17.202
39	Reactor Vessel Annulus	17.202
40	Reactor Vessel Annulus	17.202
41	Reactor Vessel Annulus	17.202
42	Reactor Vessel Annulus	17.202
43	Reactor Vessel Annulus	17.202
44	Reactor Vessel Annulus	17.202
45	Reactor Vessel Annulus	0.602
46	Reactor Vessel Annulus	0.602
47	Upper Reactor Cavity	15,500.
48	Ice Condenser	24,241.

Table 6.2.1-31 Reactor Cavity Volumes
(Page 2 of 2)

COMPARTMENT NUMBER	COMPARTMENT LOCATION	VOLUME (ft^3)
49	Ice Condenser	28,760.
50	Ice Condenser	28,760.
51	Ice Condenser	28,760.
52	Ice Condenser	47,000.
53	Pipe Annulus	150.
54	Inspection Port	17.280
55	Inspection Port	17.280
56	Inspection Port	17.280
57	Inspection Port	17.280
58	Inspection Port	17.280
59	Inspection Port	17.280
60	Inspection Port	17.280
61	Inspection Port	17.280
62	Pipe Annulus	47.
63	Pipe Annulus	47.
64	Pipe Annulus	47.
65	Pipe Annulus	47.
66	Pipe Annulus	47.
67	Pipe Annulus	47.
68	Pipe Annulus	150.

Table 6.2.1-32 Flow Path Data (Reactor Cavity) (Page 1 of 3)

Between Compartments	k	f	Inertia Length (ft)	Hydraulic Diameter (ft)	Flow Area (ft^2)	Equiv. Length (ft)	Area Ratio a/A
1 to 3	0.4	0.02	1.6	0.3	2.7	1.2	0.28
2 to 22	2.9	0.02	28.	5.8	36.	19.	0.0
3 to 34	1.0	0.02	0.7	0.4	1.2	0.7	1.0
4 to 35	0.0	0.02	3.6	0.4	0.7	3.6	1.0
5 to 36	0.0	0.02	3.3	0.4	2.6	3.3	1.0
6 to 37	0.0	0.02	3.3	0.4	2.6	3.3	1.0
7 to 9	1.0	0.02	4.9	0.4	1.0	4.1	1.0
8 to 10	0.0	0.02	6.6	0.4	2.6	6.6	1.0
9 to 11	1.04	0.02	4.6	0.4	1.0	3.7	0.46
10 to 12	0.0	0.02	6.6	0.4	2.6	6.6	1.0
11 to 13	1.04	0.02	4.8	0.4	1.0	4.0	0.46
12 to 14	0.0	0.02	6.6	0.4	2.6	6.6	1.0
13 to 15	1.04	0.02	4.6	0.4	1.0	3.7	0.46
14 to 16	0.0	0.02	6.6	0.4	2.6	6.6	1.0
15 to 17	1.04	0.02	4.9	0.4	1.0	4.1	0.5
16 to 18	0.0	0.02	6.6	0.4	2.6	6.6	1.0
17 to 19	1.0	0.02	4.6	0.4	1.0	3.7	0.46
18 to 20	0.0	0.02	6.6	0.4	2.6	6.6	1.0
19 to 4	1.0	0.02	5.4	0.4	0.5	5.4	1.0
20 to 6	0.0	0.02	5.0	0.4	2.6	5.0	1.0
21 to 22	2.0	0.02	38.	40.	1560.	38.	0.43
22 to 23	3.0	0.02	38.	40.	1560.	38.	0.47
23 to 24	2.0	0.02	38.	40.	1560.	38.	0.43
24 to 21	3.0	0.02	32.	8.0	100.	27.	0.09
25 to 7	2.8	0.02	3.0	0.2	1.1	1.7	0.12
26 to 9	2.8	0.02	3.0	0.2	1.1	1.7	0.12
27 to 11	2.8	0.02	3.1	0.2	1.3	1.7	0.13
28 to 13	2.8	0.02	3.1	0.2	1.3	1.7	0.13
29 to 15	2.8	0.02	3.0	0.2	1.1	1.7	0.12
30 to 17	2.8	0.02	3.0	0.2	1.1	1.7	0.12
31 to 19	2.8	0.02	3.1	0.2	1.3	1.7	0.13
33 to 3	1.0	0.02	0.7	0.4	1.2	0.7	0.99
34 to 7	1.0	0.02	3.6	0.4	1.2	3.3	0.66
35 to 7	1.0	0.02	5.4	0.4	0.5	5.4	1.0
36 to 38	0.0	0.02	5.0	0.4	2.2	5.0	1.0
37 to 8	0.0	0.02	5.0	0.4	2.6	5.0	1.0
38 to 39	0.0	0.02	6.6	0.4	2.6	6.6	1.0
39 to 40	0.0	0.02	6.6	0.4	2.6	6.6	1.0
40 to 41	0.0	0.02	6.6	0.4	2.6	6.6	1.0
41 to 42	0.0	0.02	6.6	0.4	2.6	6.6	1.0
42 to 43	0.0	0.02	6.6	0.4	2.6	6.6	1.0
43 to 44	0.0	0.02	6.6	0.4	2.6	6.6	1.0
44 to 5	0.0	0.02	5.0	0.4	2.6	5.0	1.0
45 to 3	1.0	0.02	0.8	0.4	0.5	0.8	0.78
46 to 3	1.0	0.02	0.8	0.4	0.5	0.8	0.78
53 to 1	0.4	0.02	7.6	0.83	5.5	6.8	0.11
54 to 1	0.5	0.02	2.6	2.5	4.9	1.9	0.25
55 to 25	0.5	0.02	2.6	2.5	4.9	1.9	0.25
56 to 26	0.5	0.02	2.6	2.5	4.9	2.0	0.26

Table 6.2.1-32 Flow Path Data (Reactor Cavity) (Page 2 of 3)

Between Compartments	k	f	Inertia Length (ft)	Hydraulic Diameter (ft)	Flow Area (ft^2)	Equiv. Length (ft)	Area Ratio a/A
57 to 27	0.5	0.02	2.6	2.5	4.9	1.9	0.25
58 to 28	0.5	0.02	2.6	2.5	4.9	1.9	0.25
59 to 29	0.5	0.02	2.6	2.5	4.9	1.9	0.25
60 to 30	0.5	0.02	2.6	2.5	4.9	2.0	0.26
61 to 31	0.5	0.02	2.6	2.5	4.9	1.9	0.25
62 to 25	0.4	0.02	3.0	0.83	5.5	2.2	0.11
63 to 26	0.4	0.02	3.0	0.83	5.5	2.2	0.11
64 to 27	0.4	0.02	3.0	0.83	5.5	2.2	0.11
65 to 28	0.4	0.02	3.0	0.83	5.5	2.2	0.11
66 to 29	0.4	0.02	3.0	0.83	5.5	2.2	0.11
67 to 30	0.4	0.02	3.0	0.83	5.5	2.2	0.11
68 to 31	0.4	0.02	7.6	0.83	5.5	6.8	0.11
1 to 19	0.4	0.02	3.1	0.2	1.3	1.7	0.13
2 to 6	3.7	0.02	6.5	0.4	0.7	6.4	0.0
4 to 45	0.6	0.02	2.4	0.4	0.7	2.4	0.95
6 to 5	0.0	0.02	13.	0.4	0.7	13.	1.0
7 to 38	1.0	0.02	6.0	0.4	0.3	4.7	0.23
8 to 2	3.7	0.02	6.6	0.4	1.3	6.4	0.0
9 to 39	9.2	0.02	6.7	0.4	0.3	4.9	0.23
10 to 2	3.7	0.02	6.6	0.4	1.3	6.4	0.0
11 to 40	1.0	0.02	5.5	0.4	0.2	4.5	0.17
12 to 2	3.7	0.02	6.6	0.4	1.3	6.4	0.0
13 to 41	9.2	0.02	6.0	0.4	0.2	4.6	0.17
14 to 2	3.7	0.02	6.6	0.4	1.3	6.4	0.0
15 to 42	1.0	0.02	6.0	0.4	0.3	4.7	0.23
16 to 2	3.7	0.02	6.6	0.4	1.3	6.4	0.0
17 to 43	9.2	0.02	6.7	0.4	0.3	4.9	0.23
18 to 2	3.7	0.02	6.6	0.4	1.3	6.4	0.0
19 to 44	1.0	0.02	5.5	0.4	0.2	4.5	0.17
20 to 2	3.7	0.02	6.6	0.4	1.3	6.4	0.0
21 to 48	.7837	0.0	10.36	1.0	265.875	0.0	0.096
22 to 48	.7837	0.0	10.36	1.0	265.875	0.0	0.096
23 to 48	.7837	0.0	10.36	1.0	265.875	0.0	0.096
24 to 48	.7837	0.0	10.36	1.0	265.875	0.0	0.096
25 to 3	0.4	0.02	1.6	0.3	2.7	1.2	0.28
26 to 7	0.4	0.02	3.0	0.2	1.1	1.7	0.12
27 to 9	0.4	0.02	3.0	0.2	1.1	1.7	0.12
28 to 11	0.4	0.02	3.1	0.2	1.3	1.7	0.13
29 to 13	0.4	0.02	3.1	0.2	1.3	1.7	0.13
30 to 15	0.4	0.02	3.0	0.2	1.1	1.7	0.12
31 to 17	0.4	0.02	3.0	0.2	1.1	1.7	0.12
33 to 46	2.2	0.02	3.3	0.4	0.4	3.3	0.25
34 to 46	2.2	0.02	3.3	0.4	0.4	3.3	0.25
35 to 47	1.1	0.02	3.0	0.4	0.7	1.5	0.0
37 to 36	0.0	0.02	13.	0.4	0.7	13.	1.0
38 to 8	0.0	0.02	13.	0.4	1.3	13.	1.0
39 to 10	0.0	0.02	13.	0.4	1.3	13.	1.0

Table 6.2.1-32 Flow Path Data (Reactor Cavity) (Page 3 of 3)

Between Compartments	k	f	Inertia Length (ft)	Hydraulic Diameter (ft)	Flow Area (ft^2)	Equiv. Length (ft)	Area Ratio a/A
40 to 12	0.0	0.02	13.	0.4	1.3	13.	1.0
41 to 14	0.0	0.02	13.	0.4	1.3	13.	1.0
42 to 16	0.0	0.02	13.	0.4	1.3	13.	1.0
43 to 18	0.0	0.02	13.	0.4	1.3	13.	1.0
44 to 20	0.0	0.02	13.	0.4	1.3	13.	1.0
45 to 33	0.0	0.02	3.3	0.4	0.4	3.3	0.25
48 to 49	0.0	0.1055	8.733	0.855	989.01	8.0	0.230
49 to 50	0.0	0.0592	12.278	0.855	982.47	16.0	0.239
50 to 51	0.0	0.0592	12.278	0.855	982.47	16.0	0.359
51 to 52	0.87979	0.1249	8.8558	0.855	982.47	8.0	0.359
52 to 32	1.43	0.0	2.8	1.0	2003.1		0.269
53 to 25	0.4	0.02	7.6	0.83	5.5	6.8	0.11
54 to 47	1.0	0.02	1.9	2.5	4.9	1.8	0.0
55 to 47	1.0	0.02	1.9	2.5	4.9	1.8	0.0
56 to 47	1.0	0.02	1.9	2.5	4.9	1.8	0.0
57 to 47	1.0	0.02	1.9	2.5	4.9	1.8	0.0
58 to 47	1.0	0.02	1.9	2.5	4.9	1.8	0.0
59 to 47	1.0	0.02	1.9	2.5	4.9	1.8	0.0
60 to 47	1.0	0.02	1.9	2.5	4.9	1.8	0.0
61 to 47	1.0	0.02	1.9	2.5	4.9	1.8	0.0
62 to 26	0.4	0.02	3.0	0.83	5.5	2.2	0.11
63 to 27	0.4	0.02	3.0	0.83	5.5	2.2	0.11
64 to 28	0.4	0.02	3.0	0.83	5.5	2.2	0.11
65 to 29	0.4	0.02	3.0	0.83	5.5	2.2	0.11
66 to 30	0.4	0.02	3.0	0.83	5.5	2.2	0.11
67 to 31	0.4	0.02	3.0	0.83	5.5	2.2	0.11
68 to 1	0.4	0.02	7.6	0.83	5.5	8.8	0.11
1 to 25	1.0	0.02	5.4	1.5	9.6	2.6	0.47
2 to 37	3.7	0.02	6.5	0.4	0.7	6.4	0.0
4 to 47	1.1	0.02	3.0	0.4	0.7	1.5	1.0
5 to 46	9.2	0.02	7.8	2.0	0.5	18.	1.0
7 to 47	1.1	0.02	3.0	0.4	1.4	2.9	0.0
9 to 47	1.1	0.02	3.0	0.4	1.4	2.9	0.0
11 to 47	1.1	0.02	3.0	0.4	1.4	2.9	0.0
13 to 47	1.1	0.02	3.0	0.4	1.4	2.9	0.0
15 to 47	1.1	0.02	3.0	0.4	1.4	2.9	0.0
17 to 47	1.1	0.02	3.0	0.4	1.4	2.9	0.0
19 to 47	1.1	0.02	3.0	0.4	1.4	2.9	0.0
21 to 47	3.8	0.02	5.8	5.1	26.	4.0	0.04
22 to 47	3.8	0.02	9.1	12.	74.	4.2	0.10
23 to 47	3.8	0.02	8.3	11.	62.	4.0	0.08
24 to 47	3.9	0.02	6.3	5.5	32.	4.0	0.04
25 to 26	1.0	0.02	5.3	1.4	9.1	2.3	0.44
26 to 27	1.0	0.02	5.3	1.4	9.1	2.6	0.44
27 to 28	1.0	0.02	5.4	1.5	9.6	2.6	0.47
28 to 29	1.0	0.02	5.4	1.5	9.6	2.6	0.47
29 to 30	1.0	0.02	5.3	1.4	9.1	2.6	0.44
30 to 31	1.0	0.02	5.3	1.4	9.1	2.6	0.44
31 to 1	1.0	0.02	5.4	1.5	9.6	2.6	0.47
33 to 19	1.0	0.02	3.6	0.4	1.2	3.3	0.61
35 to 46	0.6	0.02	2.4	0.4	0.7	2.4	0.95
36 to 46	9.2	0.02	7.8	2.0	0.5	18.	0.95
45 to 34	0.0	0.02	3.3	0.4	0.4	3.3	0.25
53 to 21	1.0	0.02	7.2	17.	11.0	8.8	0.0
62 to 21	1.0	0.02	2.5	1.5	11.0	2.1	0.0
63 to 22	1.0	0.02	2.5	1.5	11.0	2.1	0.0
64 to 22	1.0	0.02	2.5	1.7	11.0	2.1	0.0
65 to 23	1.0	0.02	2.5	1.7	11.0	2.1	0.0
66 to 23	1.0	0.02	2.5	1.5	11.0	2.1	0.0
67 to 24	1.0	0.02	2.5	1.5	11.0	2.1	0.0
68 to 24	1.0	0.02	7.2	1.7	11.0	6.8	0.0

Table 6.2.1-33 Containment Data (ECCS Analysis)
(Page 1 of 2)

I. Conservatively High Estimate of Containment Net Free Volume	
Containment Area	**Volume (ft^3)**
Upper Compartment	651,000
Lower Compartment	271,400
Ice Condenser	169,400
Dead-Ended Compartments (includes all accumulator rooms, both fan compartments, instrument room pipe tunnel)	129,900
II. Initial Conditions	
A. Containment Pressure	15.0 psia
B. Lowest Operational Containment Temperature for the Upper, Lower, and Dead-Ended Compartments	85°F 100°F
C. Highest Refueling Water Storage Tank Temperature	100°F
D. Lowest Temperature Outside Containment	5°F
E. Highest Initial Spray Temperature	100°F
F. Lowest Annulus Temperature	40°F
III. Structural Heat Sinks**	
A. For Each Surface	
1. Description of Surface	
2. Conservatively High Estimate of Area Exposed to Containment Atmosphere	See Tables 6.2.1-34 through 6.2.1-36
3. Location in Containment by Compartment	
B. For Each Separate Layer of Each Surface	
1. Material	
2. Conservatively Large Estimate of Layer Thickness	See Tables 6.2.1-34 through 6.2.1-36
3. Conservatively High Value of Material Conductivity	See Tables 6.2.1-34 through 6.2.1-36
4. Conservatively High Value of Volumetric Heat Capacity	See Tables 6.2.1-34 through 6.2.1-36

Table 6.2.1-33 Containment Data (ECCS Analysis)
(Page 2 of 2)

IV. Spray System	
A. Runout Flow for a Spray Pump*** (Containment Spray)	7700 gpm
B. Number of Spray Pumps Operating with No Diesel Failure	2/Unit
C. Number of Spray Pumps Operating with One Diesel Failure	1/Unit
D. Assumed Post Accident Initiation of Spray System	25 sec
V. Deck Fan	
A. Fastest Post Accident Initiation of Deck Fans	10 min
B. Conservatively High Flow Rate Per Fan	42,000 cfm
VI. Conservatively Low Hydrogen Skimmer System Flow Rate 100 cfm/each	

** Structural heat sinks should also account for any surfaces neglected in containment integrity analysis.

*** Runout flow is for a break immediately downstream of the pump. In that event, the spray water will not enter the containment.

Table 6.2.1-34 Major Characteristics Of Structural Heat Sinks Inside Sequoyah Nuclear Plant Containment - Upper Compartment

Structure	Heat Transfer Area (ft^2)	Thickness and Material (as noted)	Thermal Conductivity (Btu/ft-hr-°F)	Volume Heat Capacity (Btu/ft^3-°F)
Operating Deck	4,452	1.1 ft concrete	0.84	30.24
	7,749	6.3 mils coating 1.1 ft concrete	0.087 0.84	29.8 30.24
	672	1.6 ft concrete	0.84	30.24
	11,445	6.3 mils coating 1.6 ft concrete	0.087 0.84	29.8 30.24
	4,032	0.26 in. stainless steel 1.6 ft concrete	9.87 0.84	59.22 30.24
	798	15.7 mils coating 1.6 ft concrete	0.087 0.84	29.8 30.24
Containment Shell	22,890	7.8 mils coating 0.46 in. carbon steel	0.21 27.3	29.8 30.24
	18,375	7.8 mils coating 0.58 in. carbon steel	0.21 27.3	29.8 59.22
	2,100	7.8 mils coating 1.51 in. carbon steel	0.21 27.3	29.8 59.22
Miscellaneous Steel	4,095	7.8 mils coating 0.26 in. carbon steel	0.21 27.3	29.8 59.22
	3,559	7.8 mils coating 0.46 in. carbon steel	0.21 27.3	29.8 59.22
	3,539	7.8 mils coating 0.72 in. carbon steel	0.21 27.3	29.8 59.22
	273	7.8 mils coating 1.57 in. carbon steel	0.21 27.3	29.8 59.2

Table 6.2.1-35 Major Characteristics Of Structural Heat Sinks Inside Sequoyah Nuclear Plant Containment - Lower Compartment (Page 1 of 2)

Structure	Heat Transfer Area (ft^2)	Thickness and Material (as noted)	Thermal Conductivity (Btu/ft-hr-°F)	Volume Heat Capacity (Btu/ft^3-°F)
Operating Deck	7,507	1.1 ft concrete	0.84	30.24
	2,971	1.6 mils coating 1.1 ft concrete	0.087 0.84	29.8 30.24
	2,131	1.6 ft concrete	0.84	30.24
	789	6.3 mils coating 1.84 ft concrete	0.087 0.84	29.8 30.24
	2,646	2.1 ft concrete	0.84	30.24
	210	6.3 mils coating 2.1 ft concrete	0.087 0.84	29.8 30.24
Crane Wall	14,752	1.6 ft concrete	0.84	30.24
	3,570	6.3 mils coating 1.6 ft concrete	0.087 0.84	29.8 30.24
Containment Floor	567	1.6 ft concrete	0.84	30.24
	7,612	6.3 mils coating 1.6 ft concrete	0.087 0.84	29.8 30.24
Interior Concrete	3,780	1.1 ft concrete	0.84	30.24
	567	1.1 ft concrete	0.84	30.24
	2,992	2.1 ft concrete	0.84	30.24
	2,384	0.26 in. stainless steel 2.1 ft concrete	9.8 0.84	59.2 30.24
	2,373	2.1 ft concrete	0.84	30.24
	1,480	6.3 mils coating 2.1 ft concrete	0.087 0.84	29.8 30.24
Miscellaneous Steel	12,915	7.8 mils coating 0.53 in. carbon steel	0.22 27.3	14.7 59.2
	7,560	7.8 mils coating 0.78 in. carbon steel	0.22 27.3	14.7 59.2
	5,250	7.8 mils coating 1.1 carbon steel	0.22 27.3	14.7 59.2

Table 6.2.1-35 Major Characteristics Of Structural Heat Sinks Inside Sequoyah Nuclear Plant Containment - Lower Compartment (Page 2 of 2)

Structure	Heat Transfer Area (ft^2)	Thickness and Material (as noted)	Thermal Conductivity (Btu/ft-hr-°F)	Volume Heat Capacity (Btu/ft^3-°F)
	2,625	7.8 mils coating	0.22	14.7
		1.45 in. carbon steel	27.3	59.2
	1,575	7.8 mils coating	0.22	14.7
		1.7 in. carbon steel	27.3	59.2

Table 6.2.1-36 Major Characteristics Of Structural Heat Sinks Inside Sequoyah Nuclear Plant Containment - Dead-Ended Compartment

Structure	Heat Transfer Area (ft^2)	Thickness and Material (as noted)	Thermal Conductivity (Btu/ft-hr-°F)	Volume Heat Capacity (Btu/ft^3-°F)
Containment Shell	3,045	7.8 mils coating 0.78 in. carbon steel	0.22 27.3	14.7 59.2
	4,305	7.8 mils coating 1.1 in. carbon steel	0.22 27.3	14.7 59.2
	4,305	7.8 mils coating 1.25 in. carbon steel	0.22 27.3	14.7 59.2
	3,780	7.8 mils coating 1.37 in. carbon steel	0.22 27.3	14.7 59.2
	4,305	7.8 mils coating 1.51 in. carbon steel	0.22 27.3	14.7 59.2
Crane Wall	7,255	1.6 ft concrete	0.84	30.24
	3,801	6.3 mils coating 1.58 ft concrete	0.87 0.84	14.7 30.24
Containment Floor	4,809	6.3 mils coating 2.1 ft concrete	0.087 0.84	14.7 30.24
Interior Concrete	9,870	1.1 ft concrete	0.84	30.24
	3,948	6.3 mils coating 1.1 ft concrete	0.087 0.84	14.7 30.24
	5,376	1.58 ft concrete	0.84	30.24

Table 6.2.1-37 Maximum Reverse Pressure Differential Pressure Analysis Base Case

Westinghouse ECCS structural heat transfer model

Sprays at runout flow

Offsite power available spray start time

Minimum containment temperature

Dead-ended volume is swept

Max. reverse differential pressure = 0.65 psi

Case	Variable	Change in Max. dP (psi)
1	Ice condenser flow through the drains acts as 50% thermal efficient spray	+0.2
2	Same as Case 1, except 100% thermal efficiency	+0.4
3	Maximum containment temperature	-0.2
4	Heat transfer coefficient to sump equals 5 times H_{max}	<0.1
5	Same as Case 2, except drain flow rate times 1.5	+0.6
6	Combination of Cases 2 and 4	+0.4
7	1 bay of ice condenser doors remains open	-0.65
8	Same as Case 6 except Equation (3) written as $H = H_{stag} + [H_{max} - H_{stag}]\, e^{-.025\,[t-tp]}$	+0.55
9	Same as Case 6 except 5 times upper to lower resistance	+2.0
10	RWST temperature = 105°F	+0.2

Table 6.2.1-38 Ice Condenser Steam Exit Flow vs. Time vs. Sump Temperature (Page 1 of 3)

Time (sec)	Sump Temp. (°F)	Ice Condenser Steam Exit Flow (lb/sec)
13.1	190.3	-1.74
13.8	190.6	-1.63
14.4	190.7	-1.76
15.0	190.9	-1.54
15.4	191.1	-1.37
15.9	191.2	-1.23
16.3	191.3	-.13
16.6	191.4	-.09
17.0	191.5	-.09
17.4	191.6	-.08
17.8	191.7	-.08
18.2	191.8	-.07
18.6	191.9	-.07
19.0	192.0	-.07
19.3	192.1	-.07
19.7	192.2	-.06
20.0	192.3	-1.04
20.3	192.4	-.93
20.9	192.5	-1.17
21.5	192.7	-1.43
21.8	192.8	-2.24
22.4	192.9	-2.95
23.0	193.1	-2.85
23.6	193.2	-2.64
23.9	193.3	-2.53
24.5	193.4	-2.34
25.1	193.8	-2.17
25.4	194.0	-2.05
25.7	194.1	-1.94
26.0	194.2	-1.85

Table 6.2.1-38 Ice Condenser Steam Exit Flow vs. Time vs. Sump Temperature (Page 2 of 3)

Time (sec)	Sump Temp. (°F)	Ice Condenser Steam Exit Flow (lb/sec)
26.6	194.6	-1.69
27.2	194.8	-1.58
27.5	194.9	-1.53
28.0	195.2	-1.45
29.5	195.6	-1.40
30.1	195.8	-1.42
30.7	196.0	-1.44
31.3	196.2	-1.45
31.9	196.3	-1.45
32.5	196.4	-1.43
33.1	196.5	-1.40
33.7	196.6	-1.36
34.3	196.8	-1.31
34.9	196.9	-1.26
35.5	196.9	-1.20
36.0	197.0	-1.115
36.9	197.2	-0.96
37.9	197.3	-0.80
38.9	197.4	-0.63
40.1	197.4	-0.44
41.3	197.5	-0.29
42.2	197.5	-0.20
44.0	197.4	-.09
44.9	197.3	-0.4
45.4	197.3	.12
46.7	197.2	.19
47.6	197.0	.20
48.9	196.9	.19
49.8	196.7	.17
51.2	196.5	.12

Table 6.2.1-38 Ice Condenser Steam Exit Flow vs. Time vs. Sump Temperature (Page 3 of 3)

Time (sec)	Sump Temp. (°F)	Ice Condenser Steam Exit Flow (lb/sec)
52.3	196.4	.07
53.6	196.1	.01
54.4	196.0	-.01
55.2	195.9	-.03
56.2	195.7	-.05
57.1	195.5	-.07
58.0	195.4	-.10
59.0	195.2	-.17
59.9	195.0	-.14
60.9	194.9	-.15
61.6	194.7	-.17
62.8	194.5	-.18
63.7	194.3	-.20
64.7	194.2	-.22
65.6	194.0	-.24
66.6	193.8	-.31
67.5	193.6	-.41
68.4	193.5	-.60
69.4	193.3	.20
70.3	193.2	.63
71.3	193.0	.84
72.2	192.9	1.05
73.2	192.7	1.25
74.1	192.6	1.39
75.1	192.5	1.54
76.0	192.4	1.66
77.0	192.3	1.78

Table 6.2.1-39 Mass and Energy Release Rates For Specified Steam Line Breaks
I. Run 1 - 1.4 ft^2 Break, 100.6% Power, AFW Runout Protection Failure

Time (sec)	Mass Flow Rate (lbm/sec)	Energy Flow Rate (Btu/sec)
0.01	12704.8	15143070.0
0.6	12618.8	15043683.0
1.00	12553.8	14969156.0
2.0	12405.8	14798220.0
3.0	12272.8	14642025.0
4.0	11312.0	13487580.0
5.0	10363.0	12391015.0
6.0	9590.0	11481560.0
7.0	9215.0	11041828.0
8.2	8940.0	10721244.0
8.4	8896.0	10668477.0
10.0	8594.0	10314893.0
11.0	8408.0	10091639.0
12.0	8203.0	9853781.0
12.4	8112.0	9744465.0
12.6	1940.0	2331880.0
14.0	1846.0	2218892.0
17.6	1624.0	1955296.0
20.0	1502.0	1808408.0
25.2	1310.0	1577240.0
30.2	1177.0	1417108.0
35.2	1082.0	1302728.0
45.20	970.3	1168241.0
60.2	887.7	1067903.0
90.2	812.5	976625.0
150.2	760.3	913880.6
200.2	746.5	897293.0
250.2	730.7	877570.7
300.2	615.1	737504.9
312.2	515.7	617292.9

Table 6.2.1-39 Mass and Energy Release Rates For Specified Steam Line Breaks
l. Run 1 - 1.4 ft^2 Break, 100.6% Power, AFW Runout Protection Failure

Time (sec)	Mass Flow Rate (lbm/sec)	Energy Flow Rate (Btu/sec)
326.2	416.4	496765.2
368.2	315.0	374220.0
420.2	308.6	366616.8
500.2	308.1	366022.8
600.2	307.9	365785.2
604.2	329.1	391299.9
606.2	223.5	264177.0
612.2	116.9	136656.1
622.2	58.11	67175.16
700.2	0.0	0.0

Table 6.2.1-39 Mass and Energy Release Rates For Specified Steam Line Breaks (Cont'd)
II. Run 2 - 0.6 ft^2 Split, 30% Power, AFW Runout Protection Failure

Time (sec)	Mass Flow Rate (lbm/sec)	Energy Flow Rate (Btu/sec)
.1000E-01	.1375E+04	.1633E+07
.6000E+00	.1371E+04	.1628E+07
.1000E+01	.1363E+04	.1619E+07
.2000E+01	.1345E+04	.1599E+07
.3000E+01	.1330E+04	.1581E+07
.4000E+01	.1315E+04	.1564E+07
.5000E+01	.1300E+04	.1547E+07
.5400E+01	.1295E+04	.1541E+07
.6000E+01	.1300E+04	.1547E+07
.7000E+01	.1299E+04	.1546E+07
.8000E+01	.1299E+04	.1545E+07
.1220E+02	.1296E+04	.1542E+07
.1400E+02	.1292E+04	.1538E+07
.1600E+02	.1251E+04	.1491E+07
.1800E+02	.1178E+04	.1407E+07
.2000E+02	.1116E+04	.1335E+07
.2420E+02	.1018E+04	.1220E+07
.2820E+02	.9426E+03	.1131E+07
.3220E+02	.8813E+03	.1058E+07
.3620E+02	.8309E+03	.9986E+06
.4020E+02	.7886E+03	.9483E+06
.4420E+02	.7533E+03	.9063E+06
.4620E+02	.7376E+03	.8876E+06
.4820E+02	.7231E+03	.8702E+06
.5020E+02	.7095E+03	.8540E+06
.5420E+02	.6851E+03	.8248E+06
.5870E+02	.6612E+03	.7961E+06
.6620E+02	.6278E+03	.7561E+06
.7220E+02	.6056E+03	.7293E+06
.8820E+02	.5600E+03	.6745E+06

Table 6.2.1-39 Mass and Energy Release Rates For Specified Steam Line Breaks (Cont'd)
II. Run 2 - 0.6 ft^2 Split, 30% Power, AFW Runout Protection Failure

Time (sec)	Mass Flow Rate (lbm/sec)	Energy Flow Rate (Btu/sec)
.9920E+02	.5368E+03	.6465E+06
.1162E+03	.5149E+03	.6201E+06
.1342E+03	.4912E+03	.5916E+06
.2042E+03	.4186E+03	.5039E+06
.3042E+03	.3738E+03	.4497E+06
.4102E+03	.3229E+03	.3881E+06
.5122E+03	.2721E+03	.3265E+06
.6022E+03	.2348E+03	.2812E+06
.6242E+03	.2443E+03	.2928E+06
.7002E+03	.2300E+03	.2754E+06

Table 6.2.1-39 Mass and Energy Release Rates For Specified Steam Line Breaks (Cont'd)
III. Run 3 - 0.35 ft^2 Split, 30% Power, AFW Runout Protection Failure

Time (sec)	Mass Flow Rate (lbm/sec)	Energy Flow Rate (Btu/sec)
.1000E-01	.8057E+03	.9565E+06
.6000E+00	.8041E+03	.9548E+06
.1000E+01	.8013E+03	.9516E+06
.2000E+01	.7953E+03	.9447E+06
.3000E+01	.7897E+03	.9383E+06
.4000E+01	.7845E+03	.9324E+06
.6000E+01	.7752E+03	.9217E+06
.8000E+01	.7664E+03	.9115E+06
.1000E+02	.7736E+03	.9199E+06
.1580E+02	.7857E+03	.9338E+06
.2000E+02	.7789E+03	.9260E+06
.2220E+02	.7501E+03	.8931E+06
.2320E+02	.7358E+03	.8766E+06
.2420E+02	.7227E+03	.8615E+06
.2520E+02	.7105E+03	.8474E+06
.2670E+02	.6937E+03	.8279E+06
.2820E+02	.6783E+03	.8101E+06
.2920E+02	.6688E+03	.7990E+06
.3270E+02	.6386E+03	.7639E+06
.3570E+02	.6161E+03	.7375E+06
.3970E+02	.5900E+03	.7069E+06
.4420E+02	.5647E+03	.6771E+06
.4920E+02	.5410E+03	.6492E+06
.5570E+02	.5157E+03	.6192E+06
.6320E+02	.4917E+03	.5909E+06
.7270E+02	.4673E+03	.5618E+06
.8420E+02	.4437E+03	.5338E+06
.9920E+02	.4197E+03	.5051E+06
.1182E+03	.3969E+03	.4779E+06
.1442E+03	.3727E+03	.4489E+06

Table 6.2.1-39 Mass and Energy Release Rates For Specified Steam Line Breaks (Cont'd)
III. Run 3 - 0.35 ft^2 Split, 30% Power, AFW Runout Protection Failure

Time (sec)	Mass Flow Rate (lbm/sec)	Energy Flow Rate (Btu/sec)
.1792E+03	.3500E+03	.4216E+06
.2222E+03	.3254E+03	.3919E+06
.2662E+03	.3004E+03	.3619E+06
.3182E+03	.2752E+03	.3314E+06
.3782E+03	.2513E+03	.3026E+06
.4542E+03	.2277E+03	.2740E+06
.5422E+03	.2029E+03	.2439E+06
.6022E+03	.1877E+03	.2255E+06
.6382E+03	.1955E+03	.2350E+06
.7002E+03	.1904E+03	.2288E+06

Table 6.2.1-40 Steam Line Break Cases For Core Integrity

Case	Type of Break	Boric Acid Concentration (ppm)
1	Hypothetical with offsite power, downstream of the flow restrictor	0
2	Hypothetical without offsite power, downstream of the flow restrictor	0
3	Credible - Uniform	0
4	Credible - Nonuniform	0

Table 6.2.1-41 Line Break(1) Descriptions For Mass And Energy Releases

100.6% Power	-	AFW Pump Runout Protection Failure
100.6% Power	-	Feed Control Valve (FCV) Failure
100.6% Power	-	No Failure
100.6% Power	-	Feedwater Isolation Valve (FWIV) Failure
0% Power	-	AFW Pump Runout Protection Failure
0% Power	-	Feed Control Valve (FCV) Failure
0% Power	-	No Failure
0% Power	-	Feedwater Isolation Valve (FWIV) Failure

Notes:

(1) For 1.4 ft^2 break

Table 6.2.1-42 Small Break Descriptions For Mass And Energy

Break Size (ft^2)	Description
0.944	30% Power - AFW Pump Runout Protection Failure
0.6	30% Power - AFW Pump Runout Protection Failure
0.35	30% Power - AFW Pump Runout Protection Failure
0.1	30% Power - AFW Pump Runout Protection Failure
0.86	100.6% Power - AFW Pump Runout Protection Failure

Table 6.2.1-43 Large Break Analysis - Associated Times

Case	Maximum Lower Compartment Temperature (°F)	Time, Tmax (sec)
1.4 ft^2, 100.6% Power - AFW Pump Runout Protection Failure	323.9	53.1
1.4 ft^2, 100.6% Power - FCV Failure	289.483	3.11
1.4 ft^2, 100.6% Power - FWIV Failure	289.483	3.11
1.4 ft^2, 100.6% Power - MSIV Failure	286.96	3.31
1.4 ft^2, 0% Power - AFW Pump Runout Protection Failure	287.37	3.16
1.4 ft^2, 0% Power - FCV Failure	287.30	3.21
1.4 ft^2, 0% Power - FWIV Failure	287.28	3.21
1.4 ft^2, 0% Power - MSIV Failure	288.28	2.51

Table 6.2.1-44 Small Break Analysis - Small Split - Associated Times

Case[1] (ft^2)	Maximum Lower Compartment Temperature (°F)	Time, Tmax (sec)
0.86	325.34	83.28
0.944	325.12	80.46
0.6	325.1	112.9
0.35	324.4	191.4
0.1	317.74	646.77

1 All with AFW pump runout protection failure and 30% power, except that 0.86 ft^2 break is at 100.6% power.

Table 6.2.1-45 Safety Injection Flow Minimum Safeguards

Injection Mode

RCS Pressure (psia)	Total Flow (gpm)
15.0	4,767.77
28.2	4,594.73
55.0	4,309.98
115.0	3,456.89
175.0	2,047.63
215.0	866.15
315.0	835.40

Injection Mode (Post-Reflood Phase)

RCS Pressure (psia)	Total Flow (gpm)
13.5	4,594.73

Cold Leg Recirculation Mode (w/o Residual Heat Removal [RHR] Spray)

RCS Pressure (psia)	Total Flow (gpm)
0	3,093

Cold Leg Recirculation Mode (w/ RHR Spray)

RCS Pressure (psia)	Total Flow (gpm)
0	794

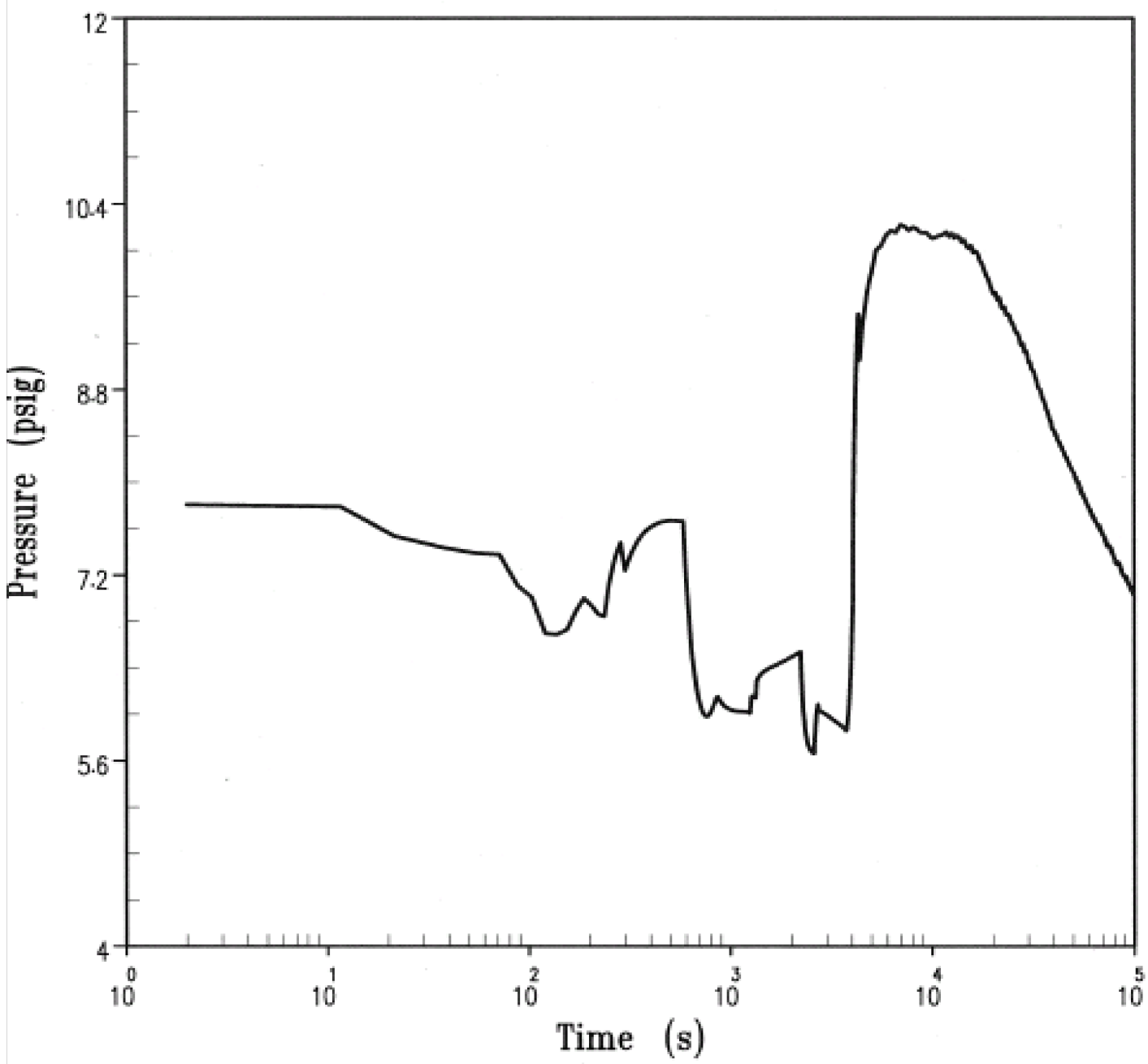

WATTS BAR NUCLEAR PLANT
FINAL SAFETY ANALYSIS REPORT

CONTAINMENT PRESSURE VERSUS TIME

FIGURE 6.2.1-1

Figure 6.2.1-1 Containment Pressure Versus Time

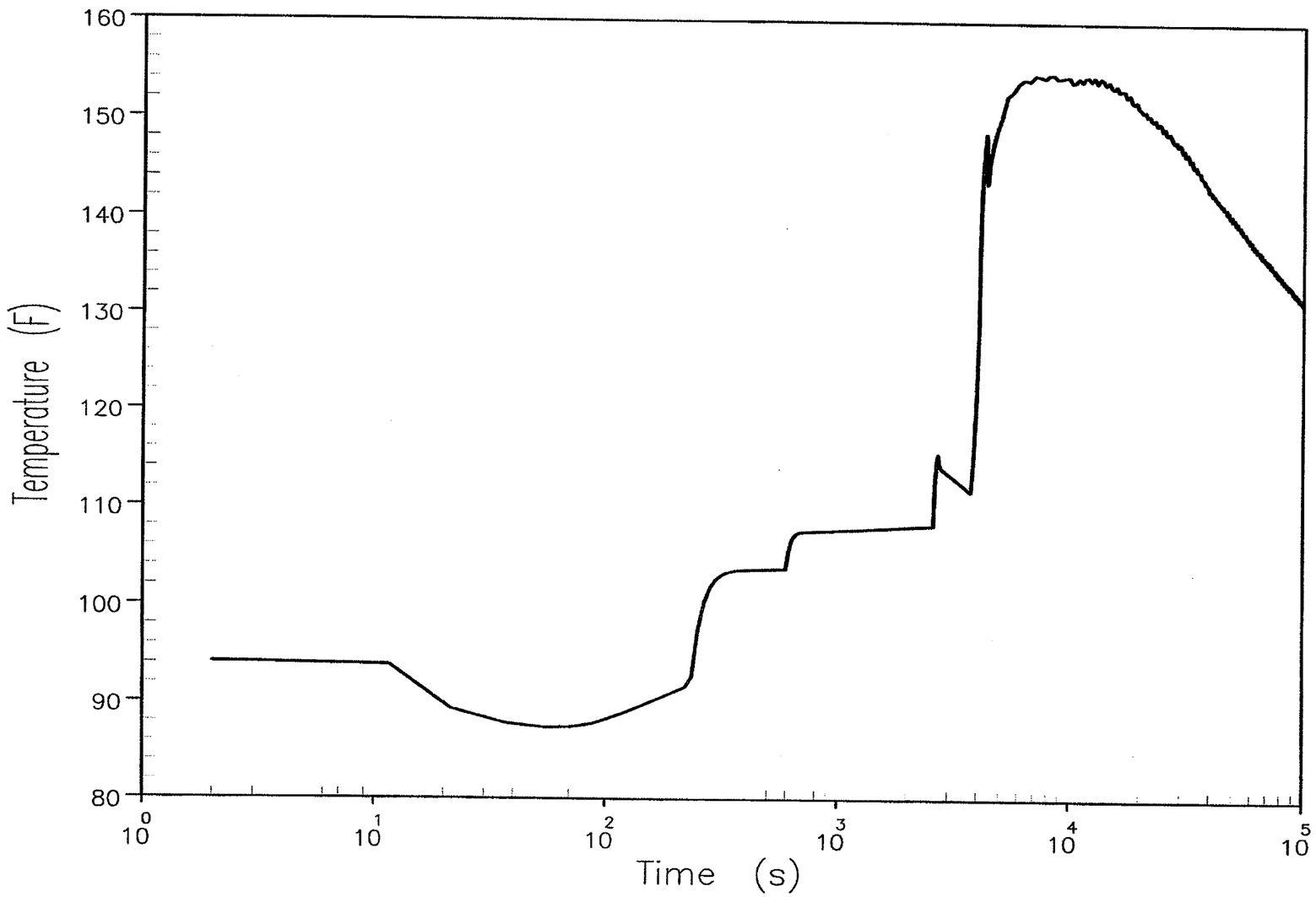

Figure 6.2.1-2a Upper Compartment Temperature Versus Time

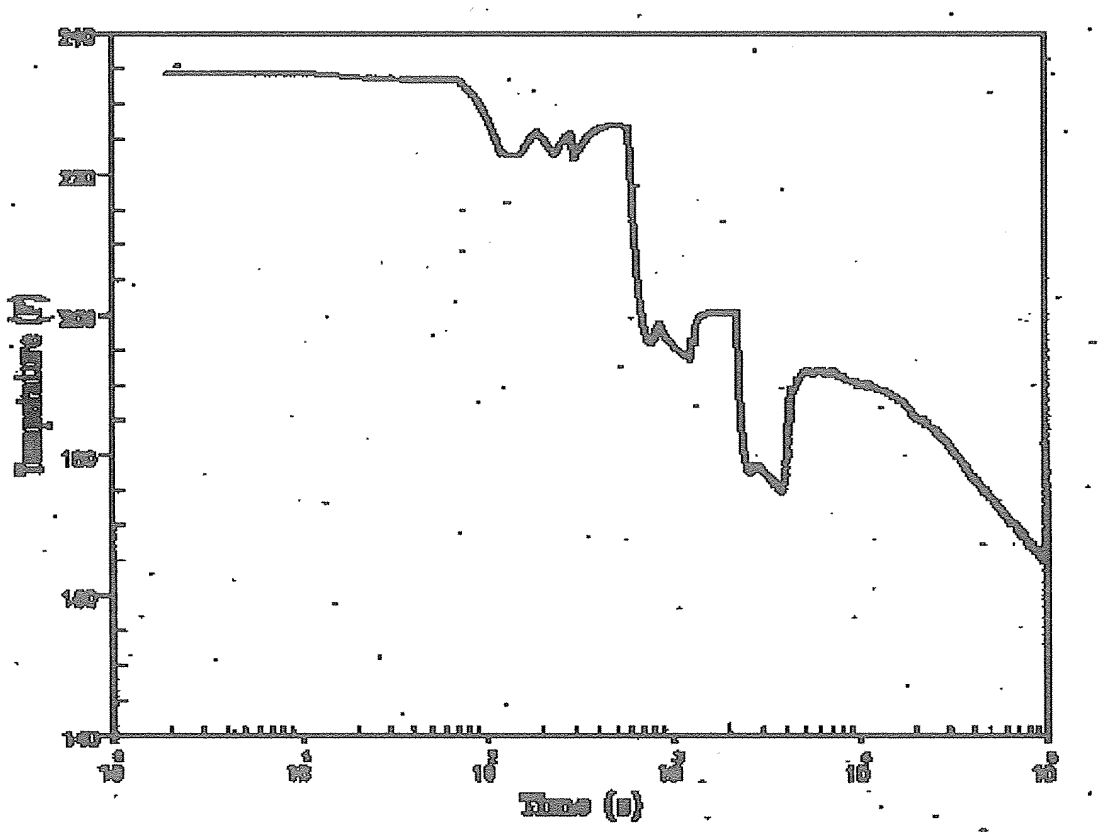

Figure 6.2.1-2b Lower Compartment Temperature Versus Time

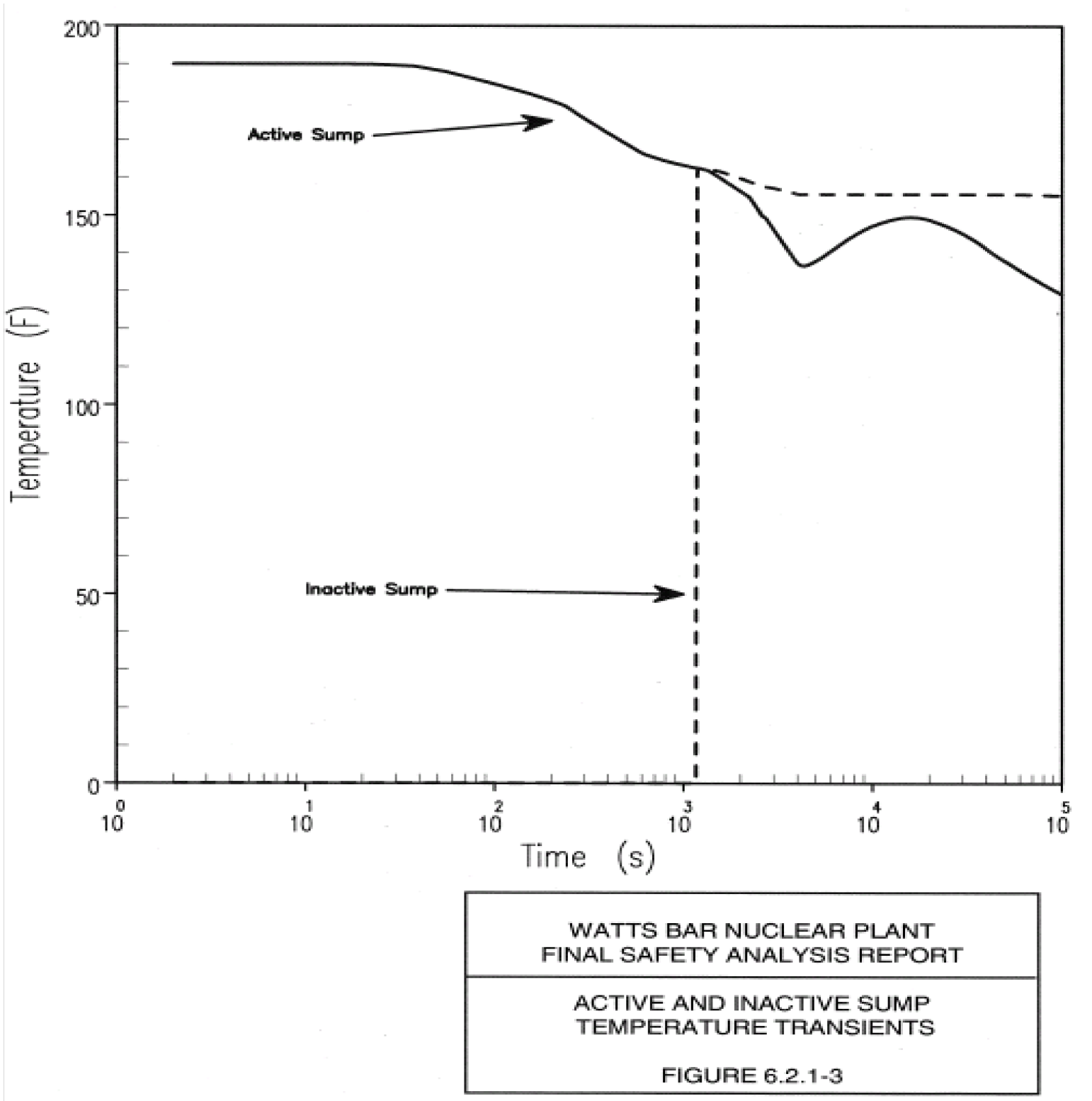

Figure 6.2.1-3 Active and Inactive Sump Temperature Transients

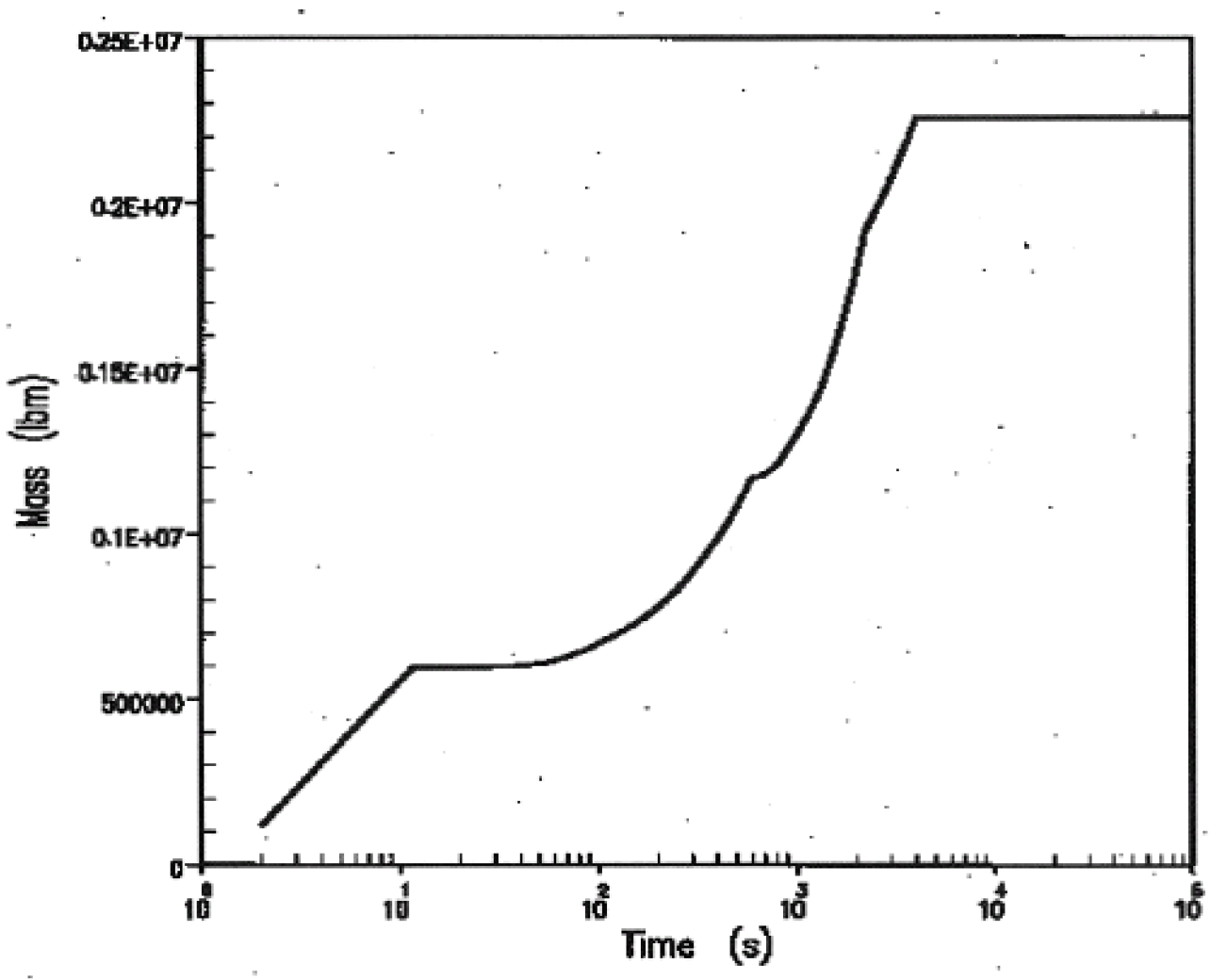

WATTS BAR NUCLEAR PLANT
FINAL SAFETY ANALYSIS REPORT

MELTED ICE MASS TRANSIENT

FIGURE 6.2.1-4

Figure 6.2.1-4 Melted Ice Mass Transient

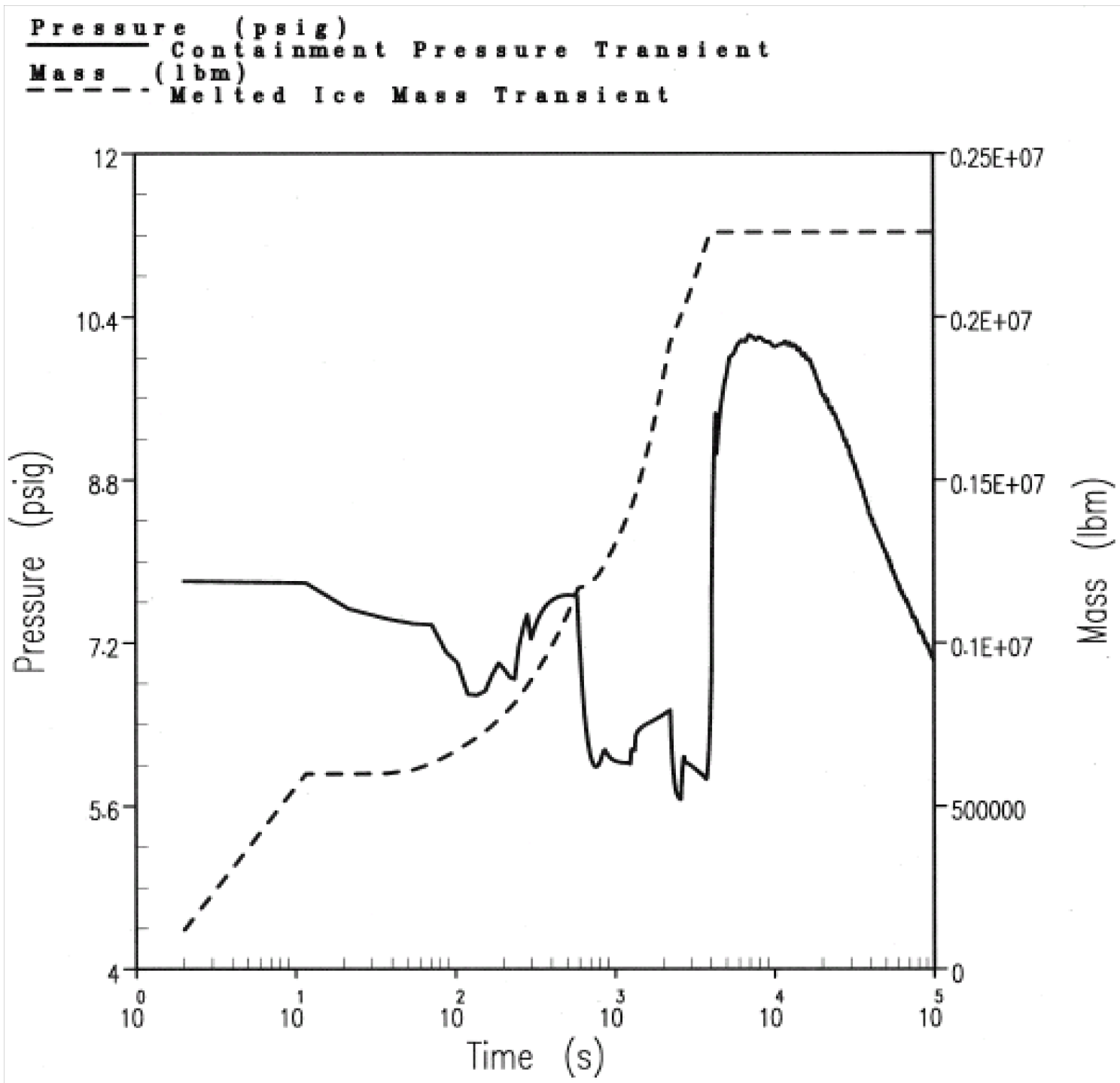

Figure 6.2.1-4a Comparison of Containment Pressure Versus Ice Melt

6370-i

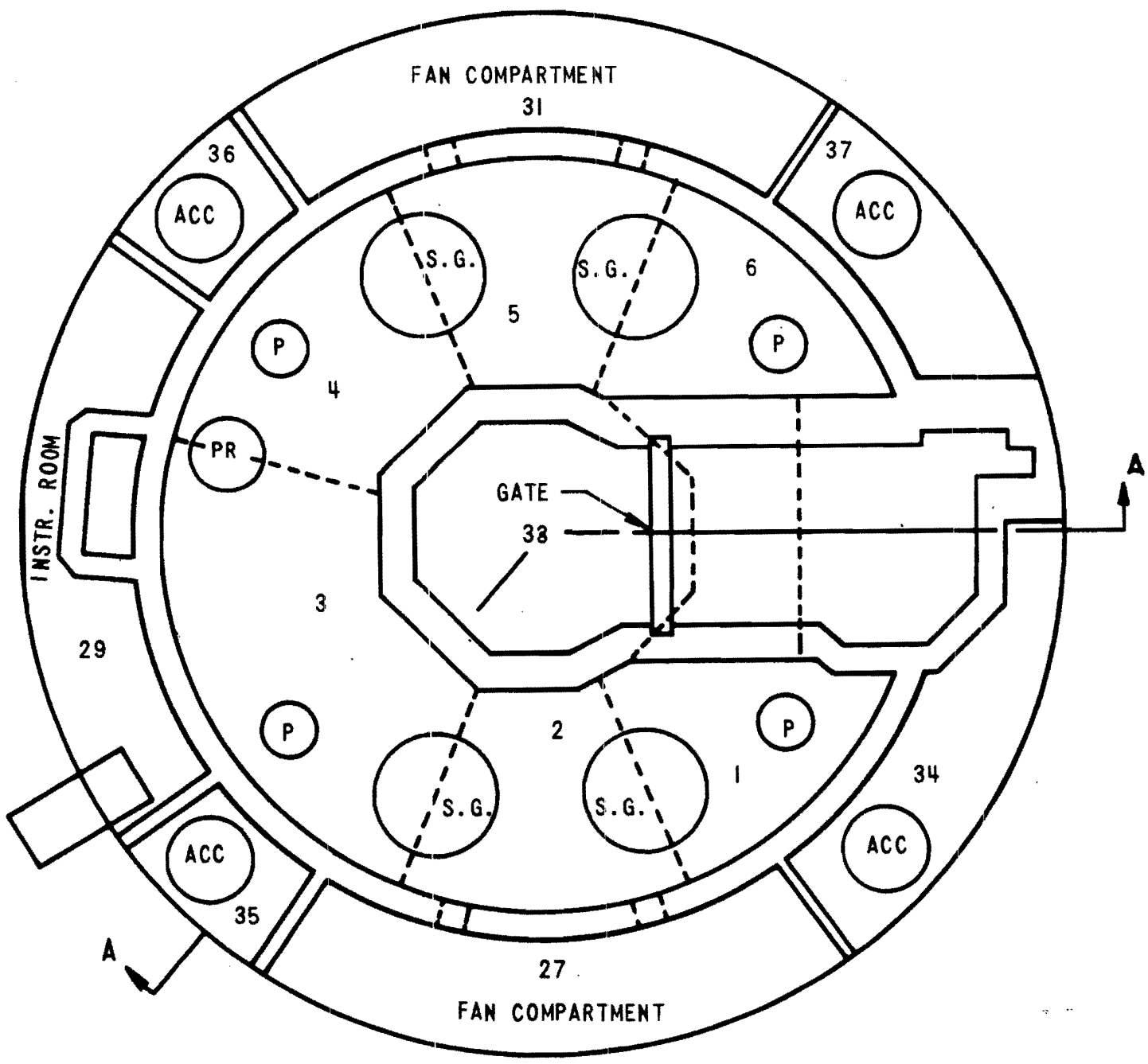

Figure 6.2.1-5 Plan at Equipment Rooms Elevation

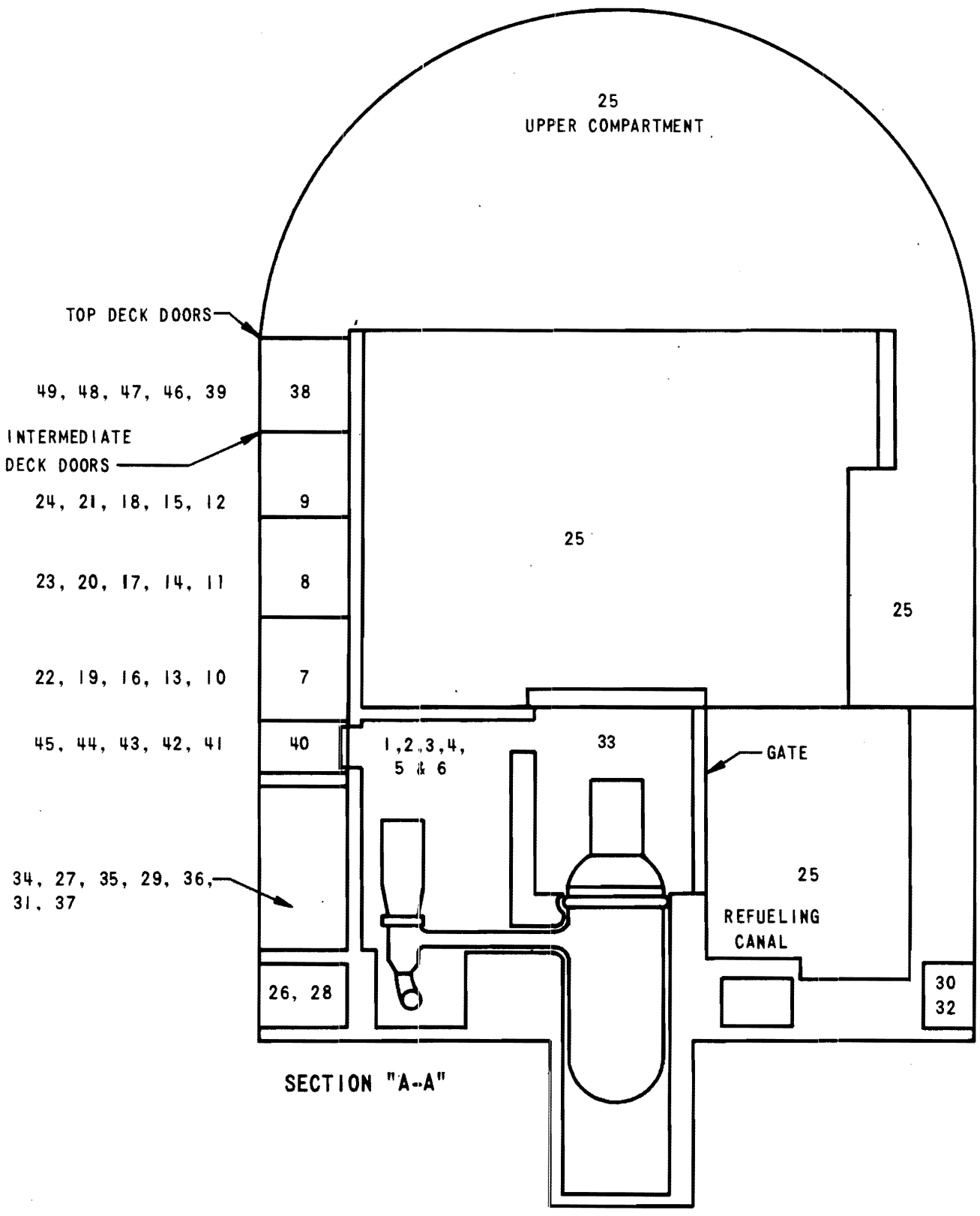

Figure 6.2.1-6 Containment Section View

6370-3

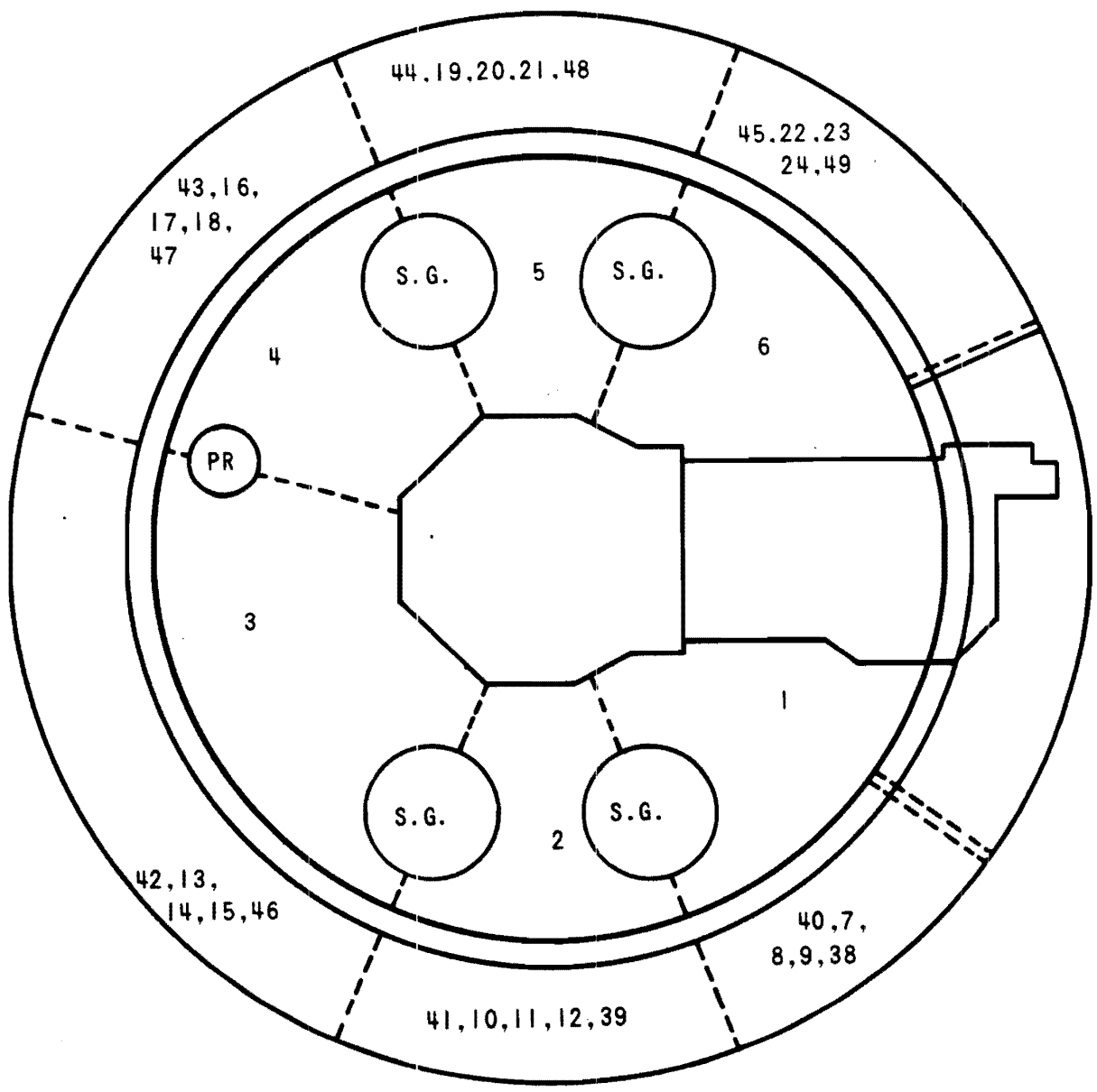

Figure 6.2.1-7 Plan View at Ice Condenser Elevation Ice Condenser Compartments

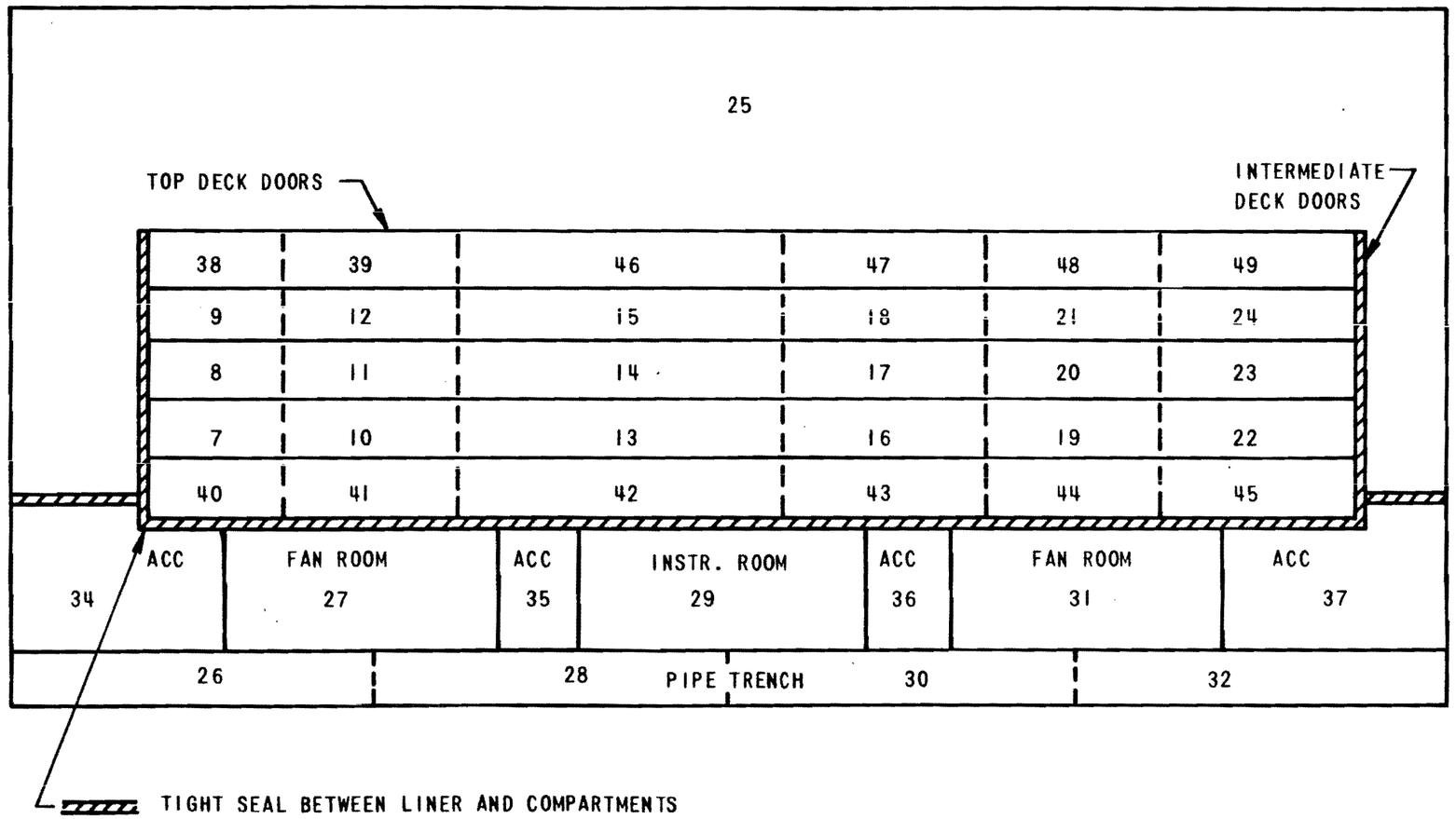

6370-4

Figure 6.2.1-8 Layout of Containment Shell

6370-5

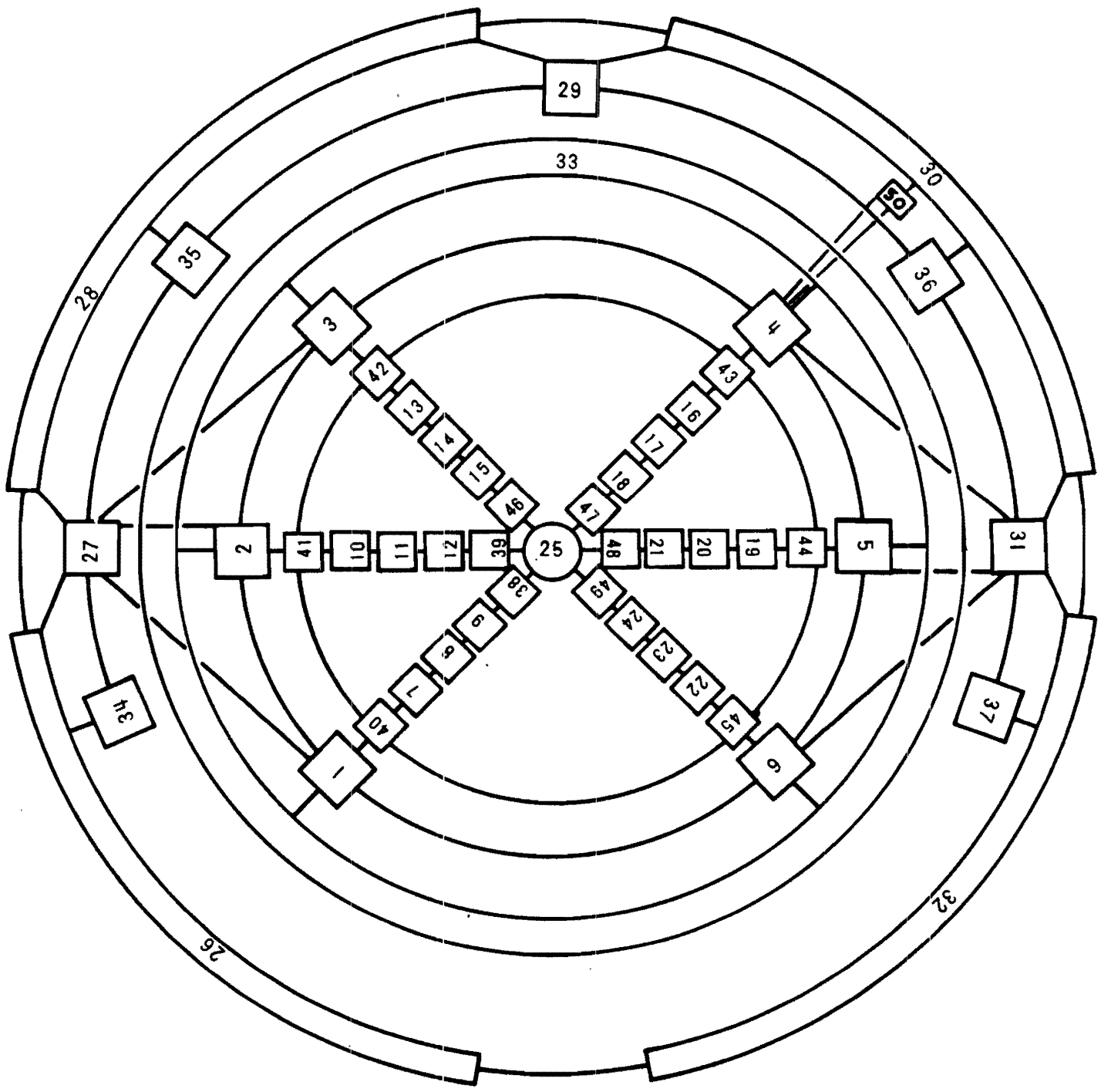

Figure 6.2.1-9 TMD Code Network

10.103-12

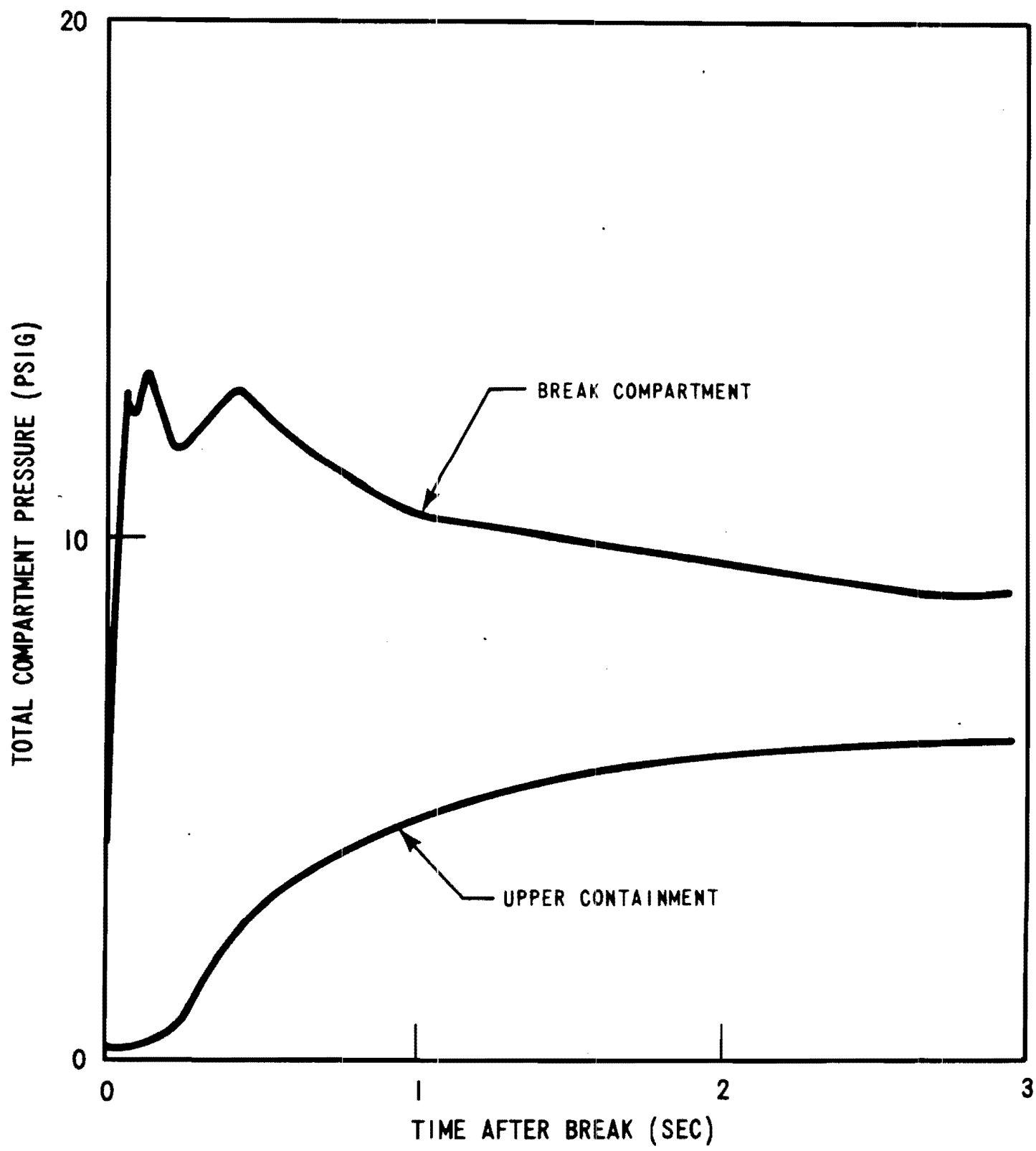

Figure 6.2.1-10 Upper and Lower Compartment Pressure Transient for Worst Case Break Compartment (Element 1) Having a DEHL Break

10.103-13

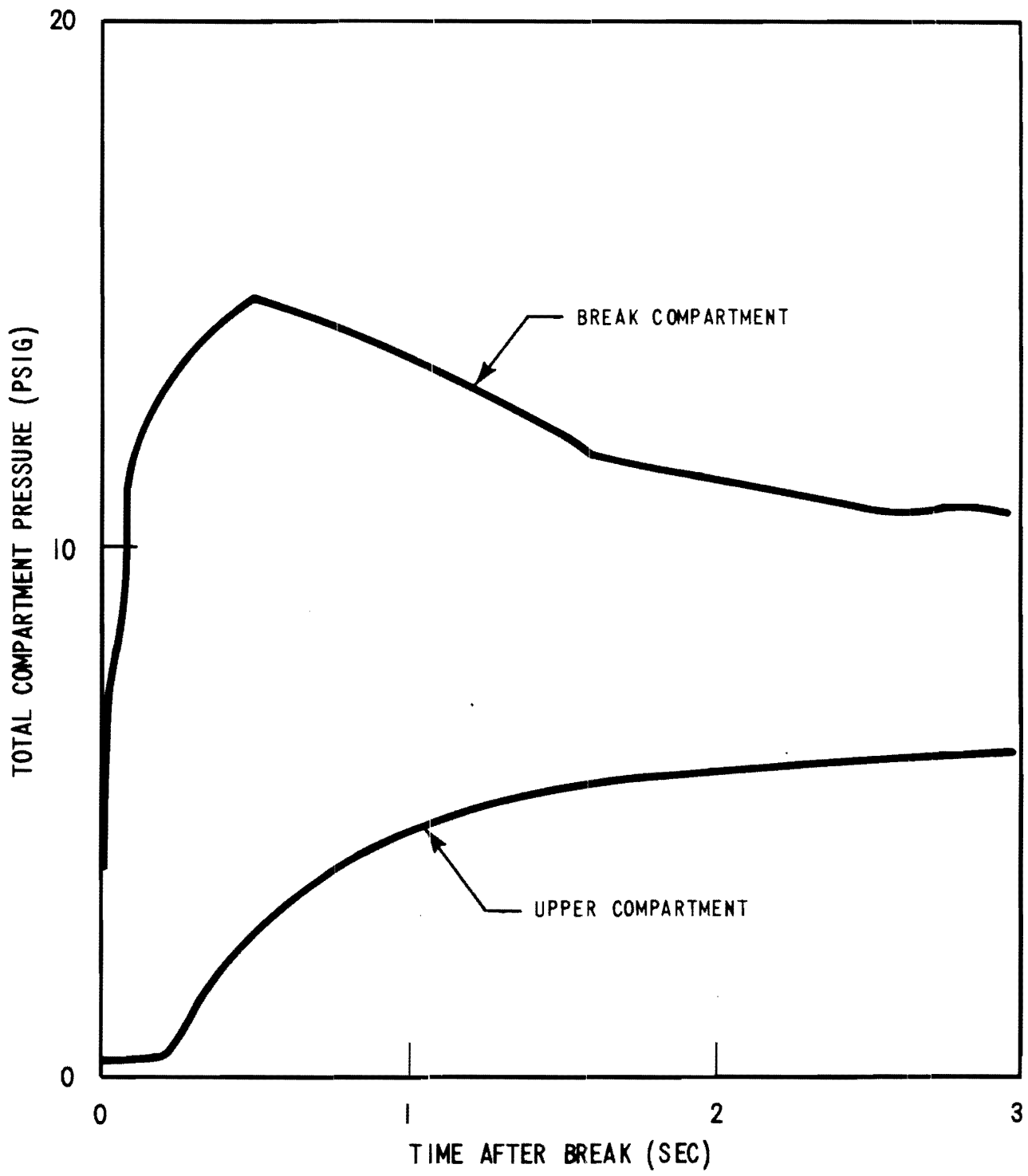

Figure 6.2.1-11 Upper and Lower Compartment Pressure Transient for Worst Case Break Compartment (Element 1) Having a DECL Break.

6266-14

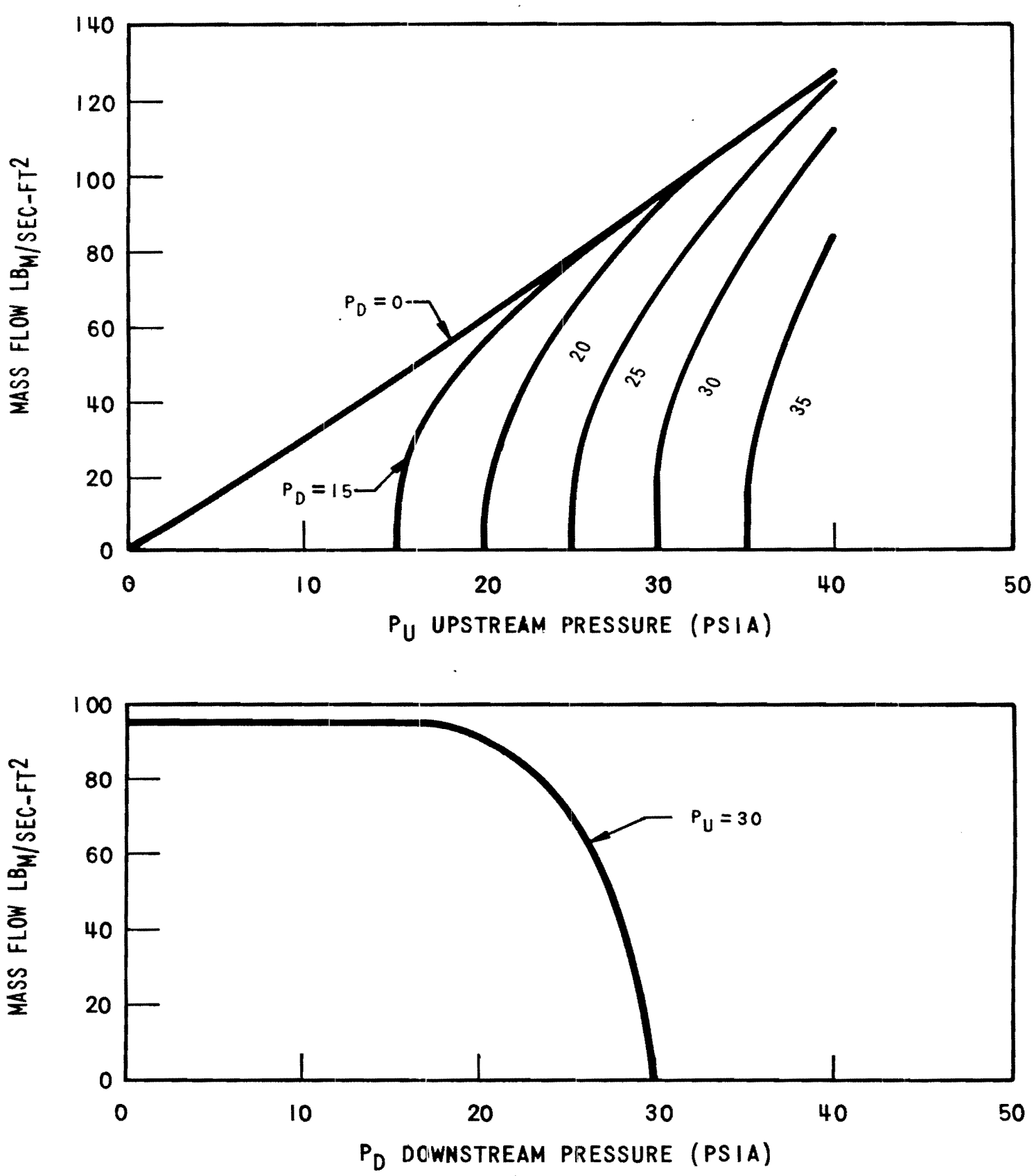

Figure 6.2.1-12 Illustration of Choked Flow Characteristics

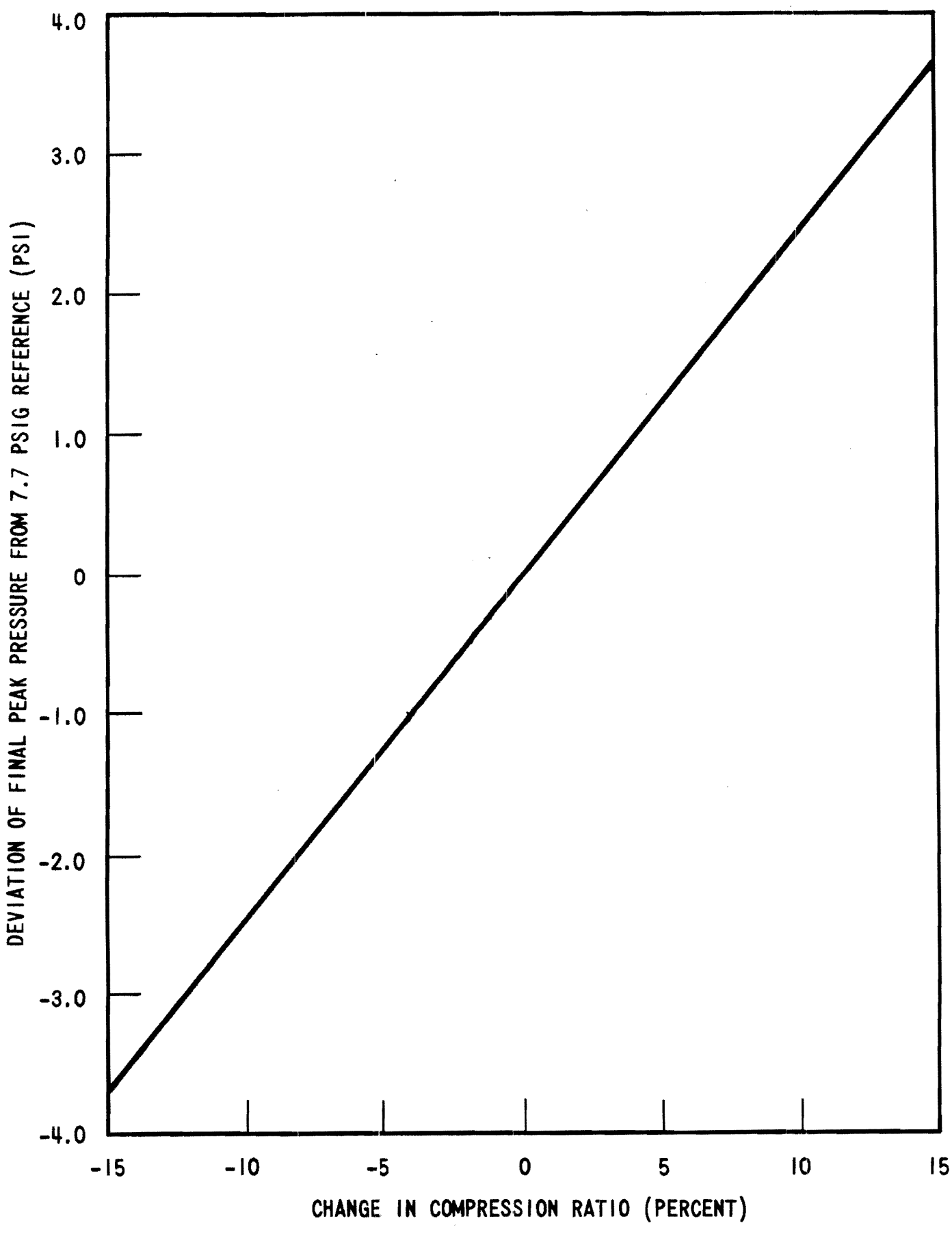

Figure 6.2.1-13 Sensitivity of Peak Pressure to Air Compression Ratio

6067-6

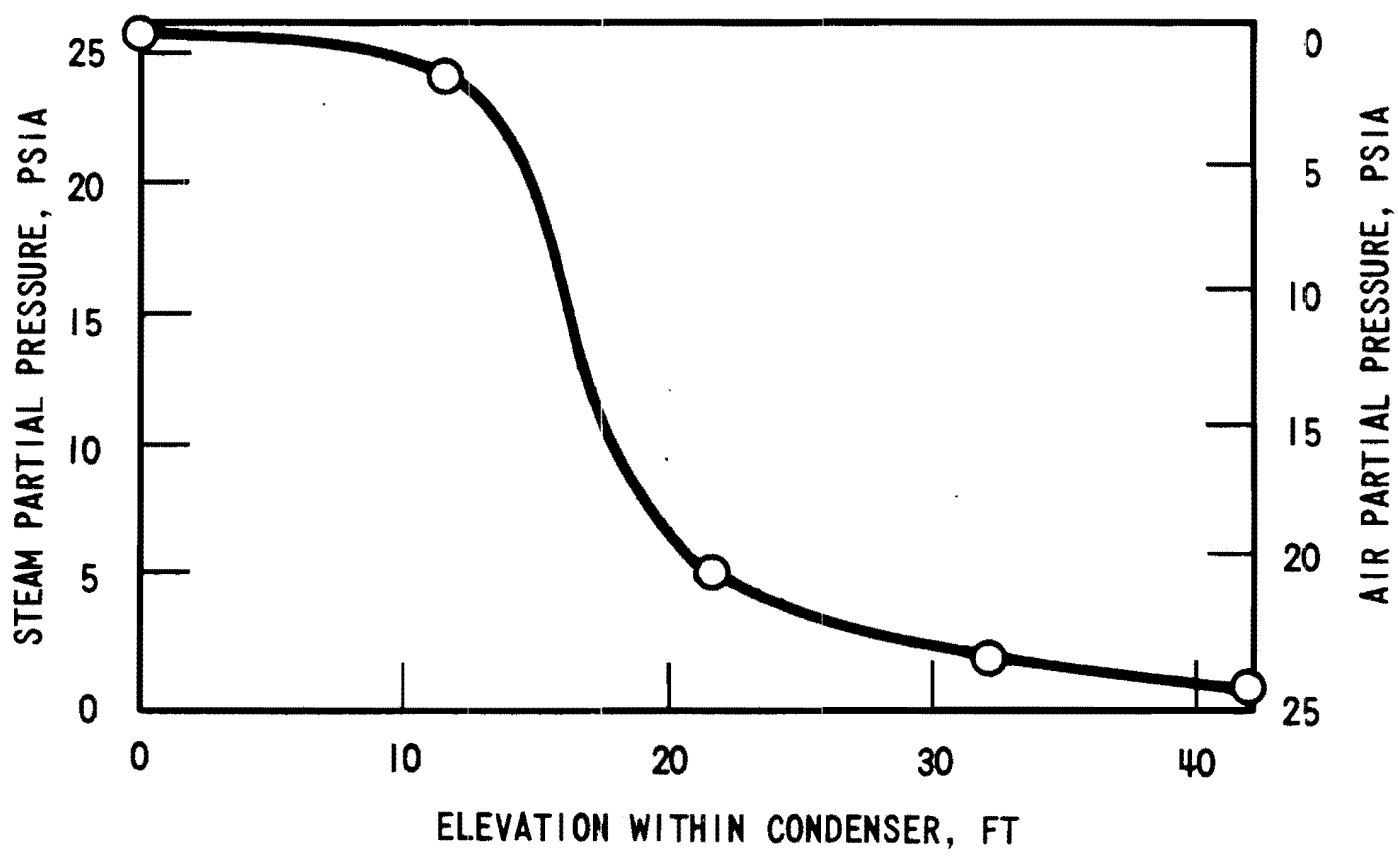

Figure 6.2.1-14 Steam Concentration in a Vertical Distribution Channel

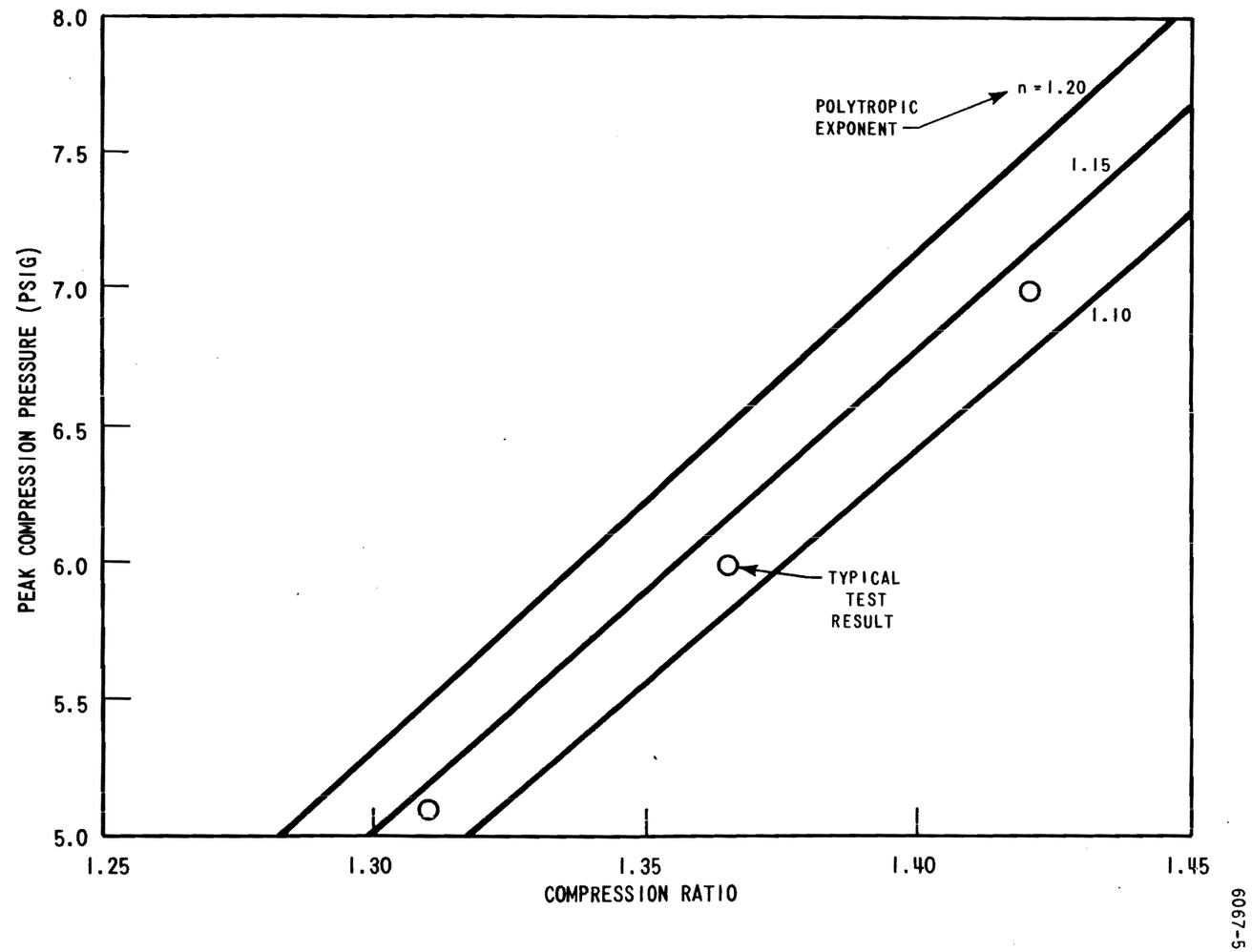

Figure 6.2.1-15 Peak Compression Pressure Versus Compression Ratio

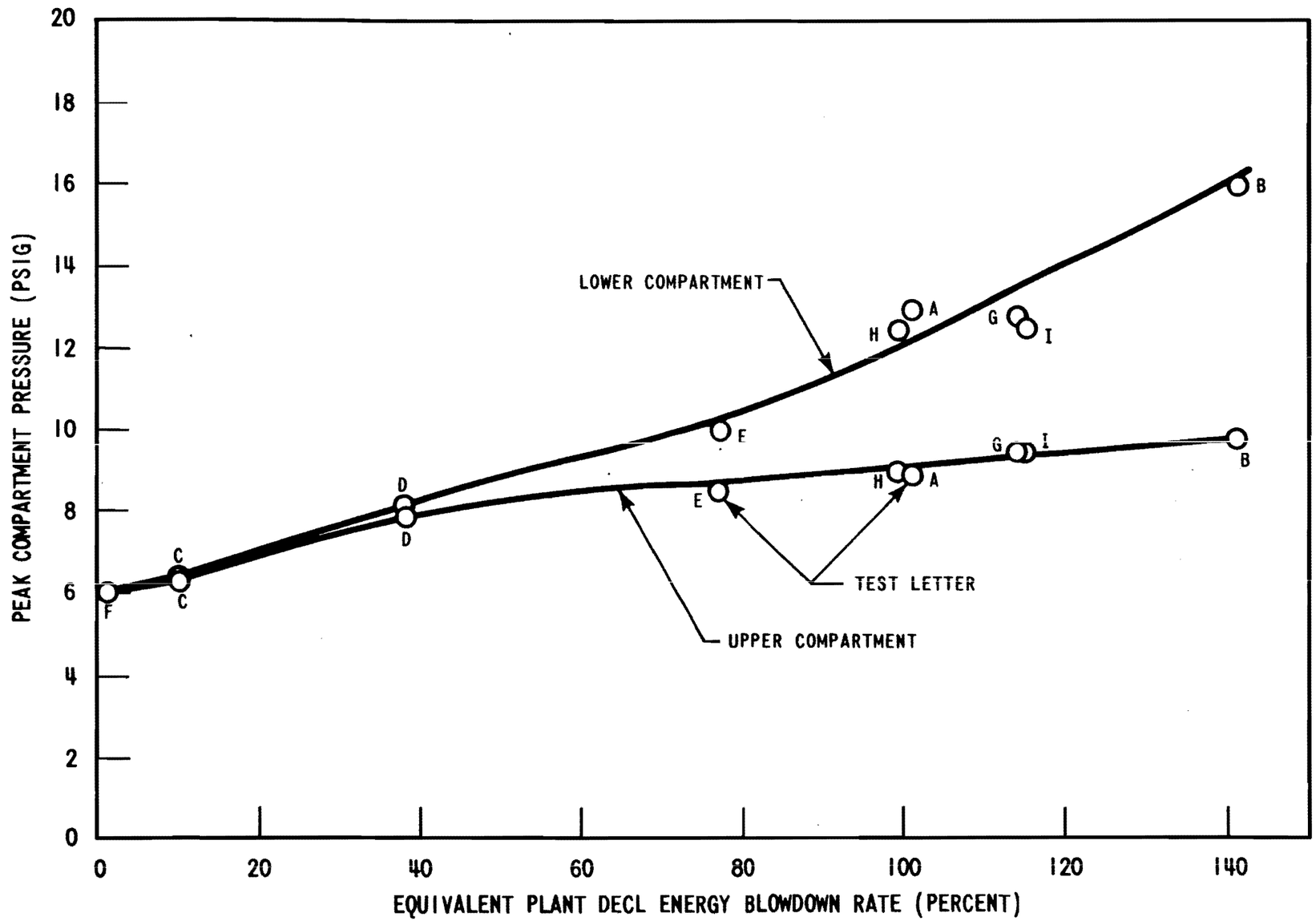

Figure 6.2.1-16 Peak Compartment Pressure versus Blowdown Rate

6067-12

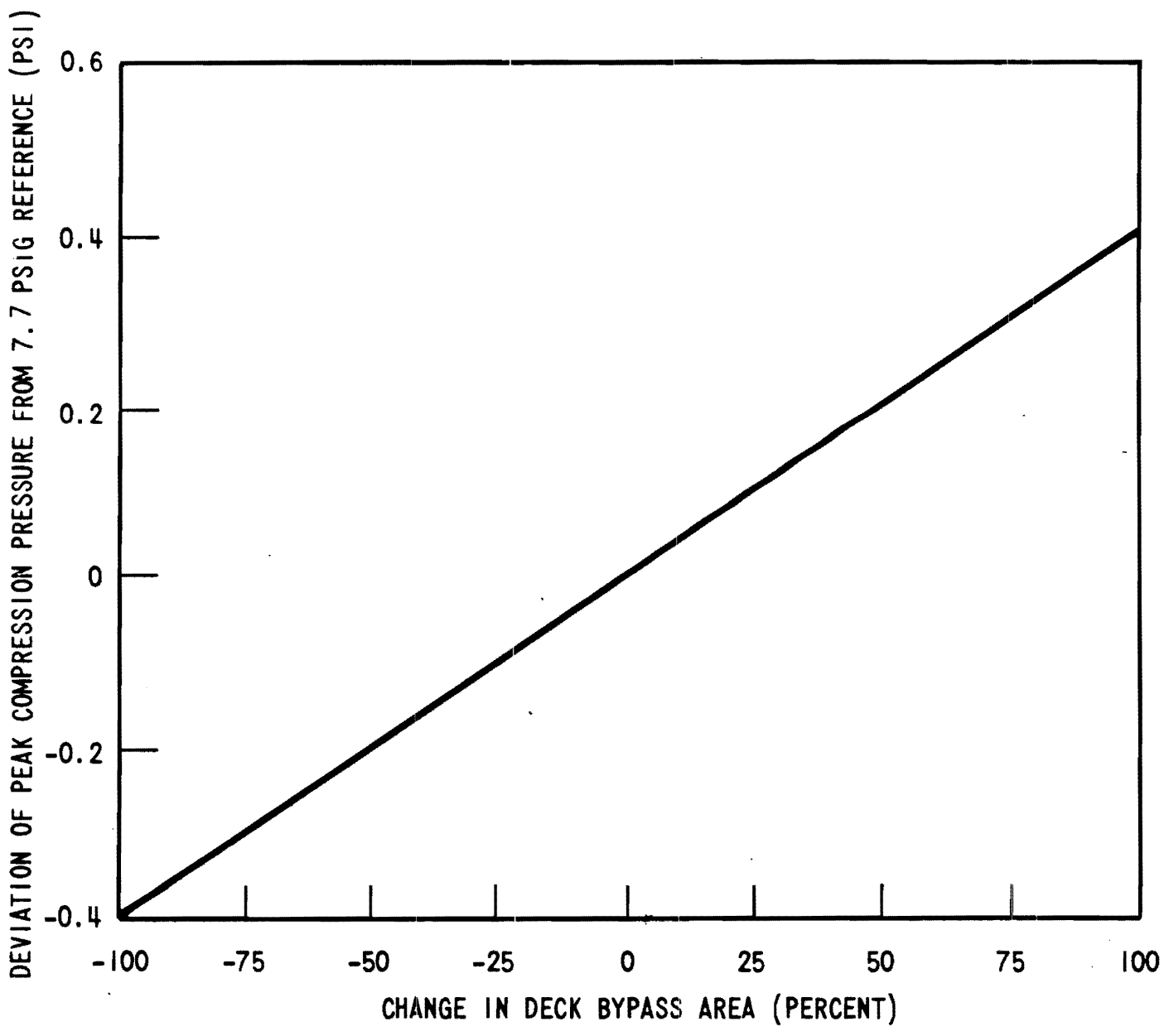

Figure 6.2.1-17 Sensitivity of Peak Compression Pressure to Deck Bypass

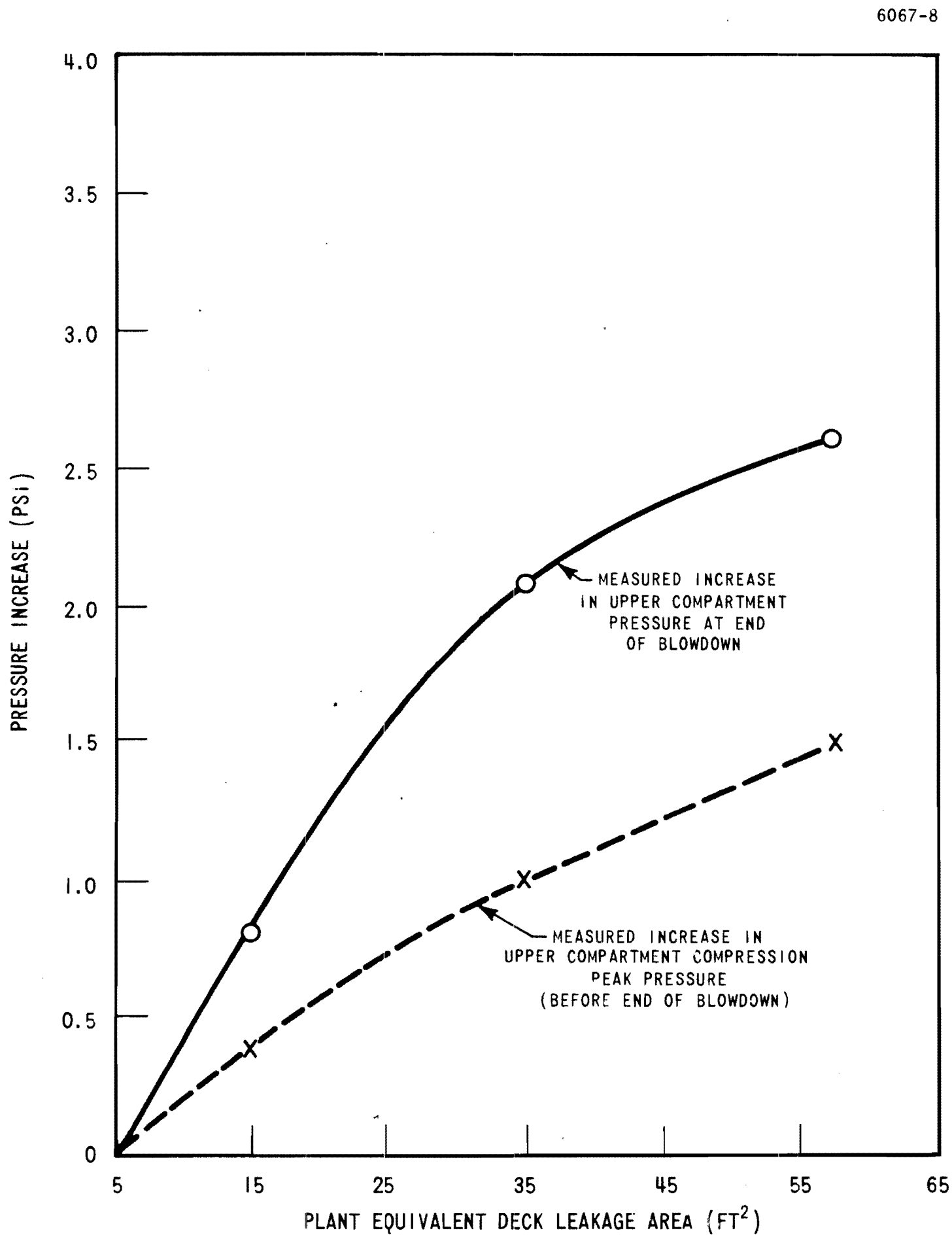

Figure 6.2.1-18 Pressure Increase Versus Deck Area From Deck Leakage Tests

6067-13

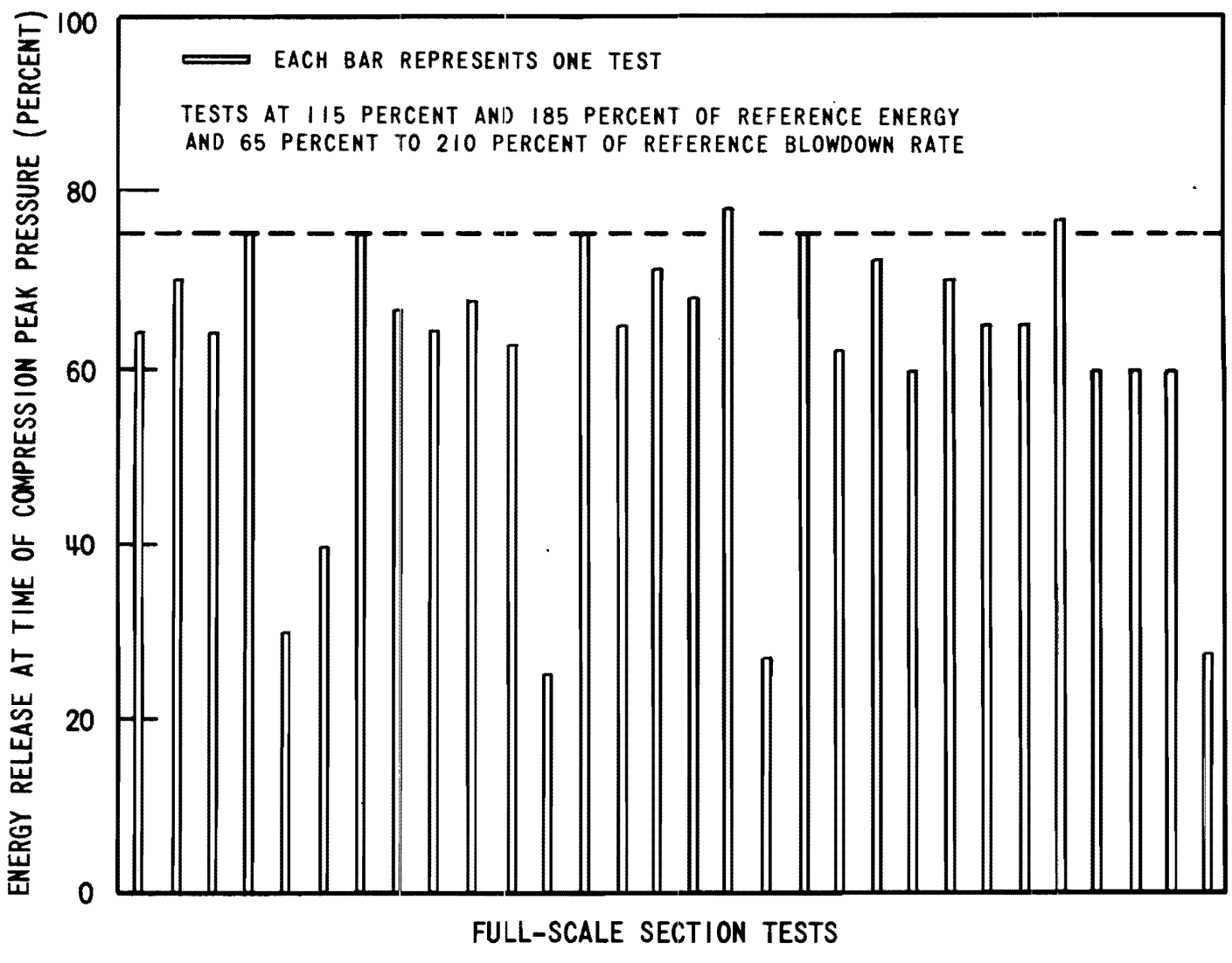

Figure 6.2.1-19 Energy Release at Time of Compression Peak Pressure From Full-Scale Section Tests with 1-Foot Diameter Baskets

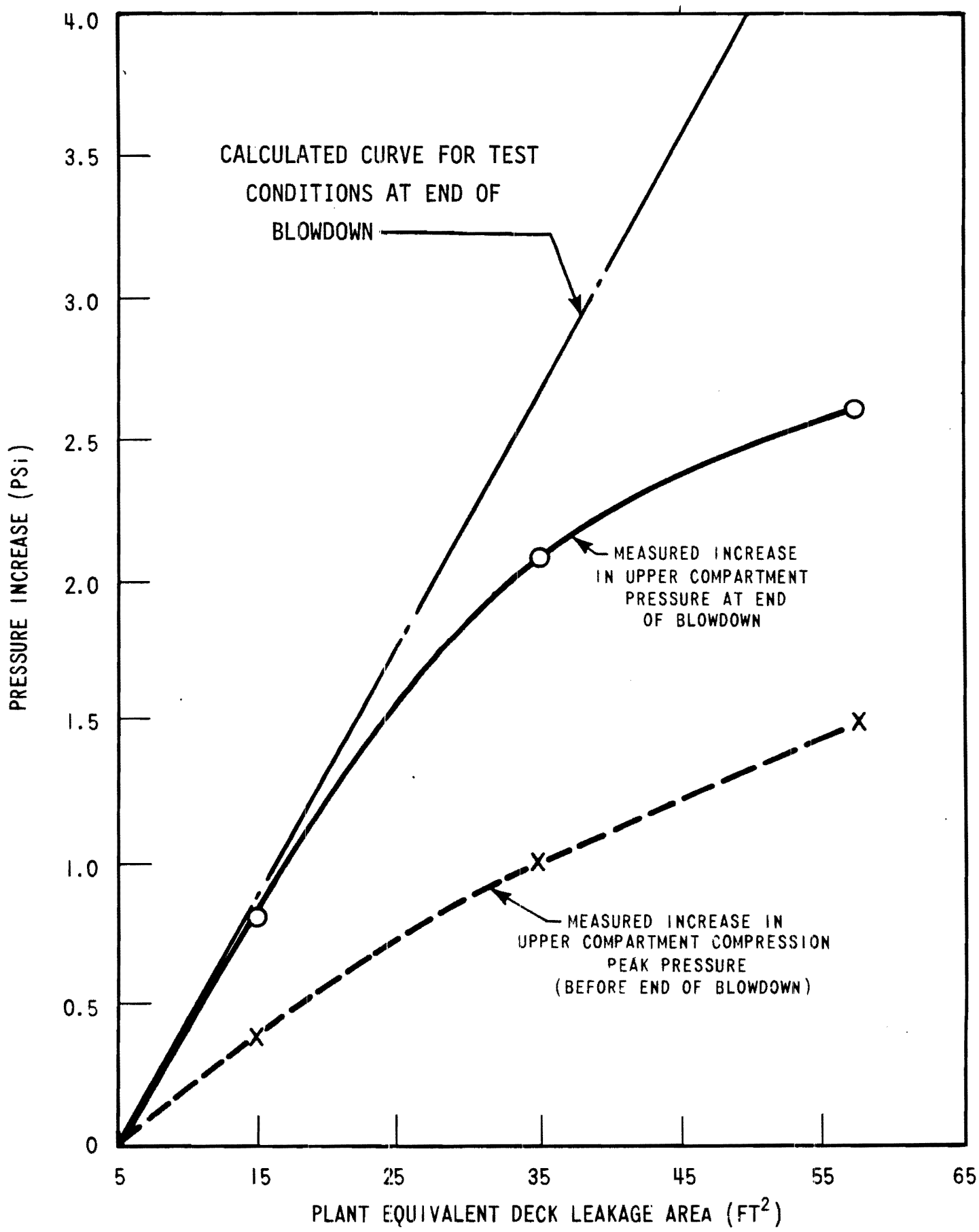

Figure 6.2.1-20 Pressure Increase Versus Deck Area From Deck Leakage Tests

Figure 6.2.1-21 Deleted by Amendment 97

Figure 6.2.1-22 Deleted by Amendment 97

Figure 6.2.1-23 Deleted by Amendment 97

Figure 6.2.1-24 Deleted by Amendment 97

Figure 6.2.1-25 Deleted by Amendment 97

Figure 6.2.1-26 Deleted by Amendment 97

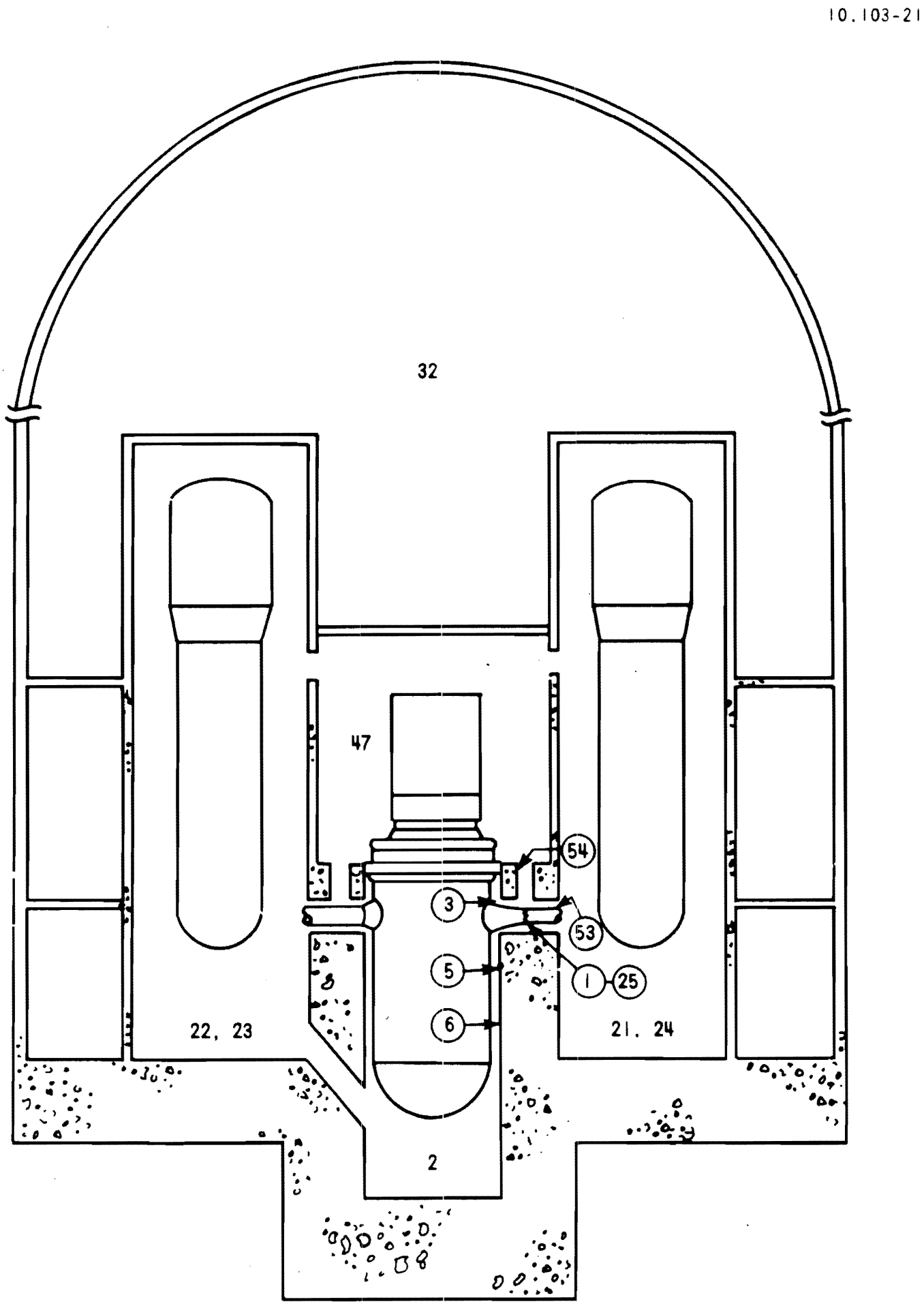

Figure 6.2.1-27 Containment Model Schematic.

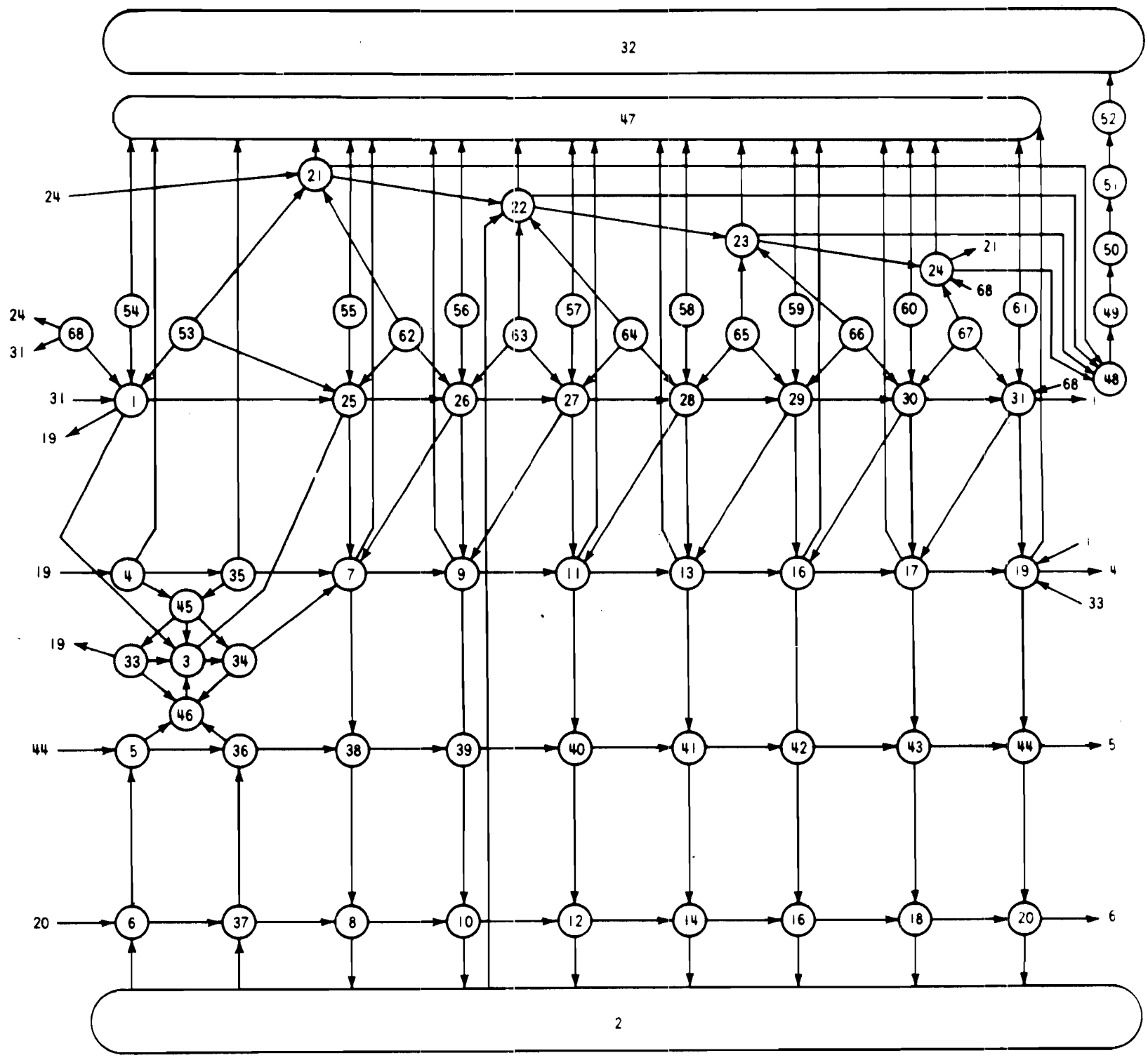

Figure 6.2.1-28 Reactor Cavity TMD Network.

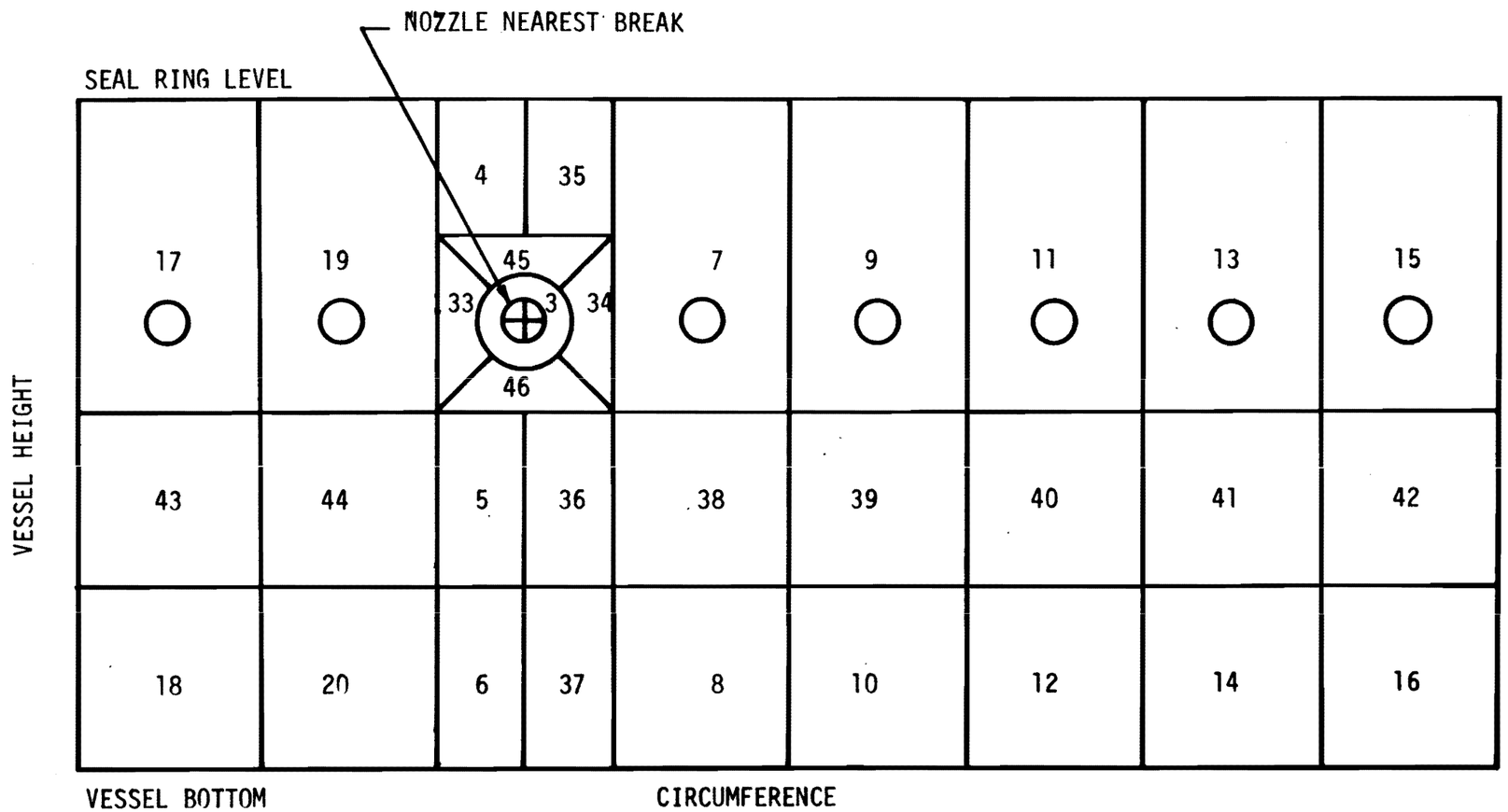

Figure 6.2.1-29 Reactor Vessel Annulus

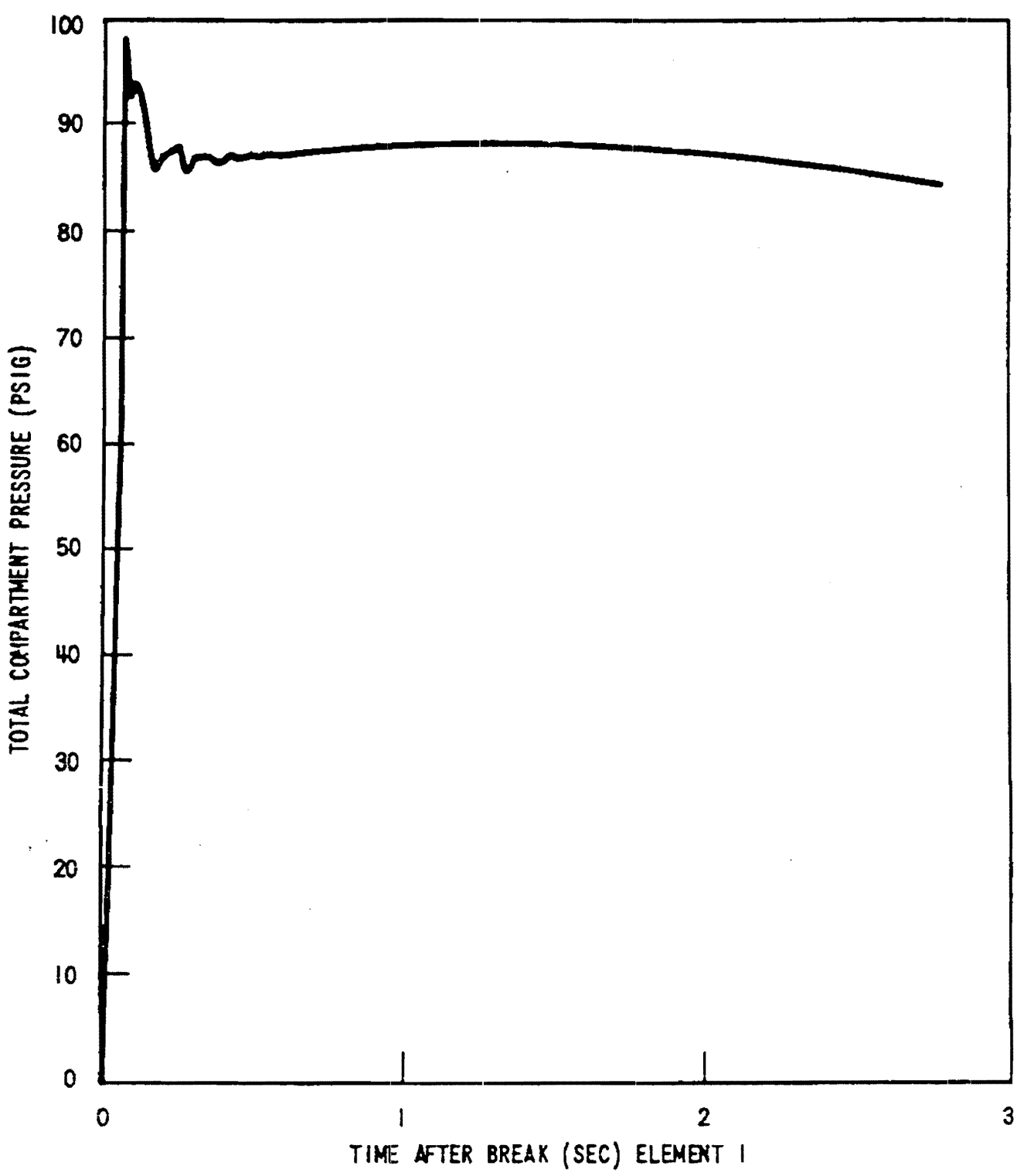

AMENDMENT 85

WATTS BAR NUCLEAR PLANT
FINAL SAFETY
ANALYSIS REPORT

127 SQUARE INCH COLD LEG BREAK
(REACTOR CAVITY ANALYSIS)
figure 6.2.1- 30

SCANNED DOCUMENT
THIS IS A SCANNED DOCUMENT MAINTAINED ON
THE WBNP OPTIGRAPHICS SCANNER DATABASE

Figure 6.2.1-30 127 Square Inch Cold Leg Break (Reactor Cavity Analysis)

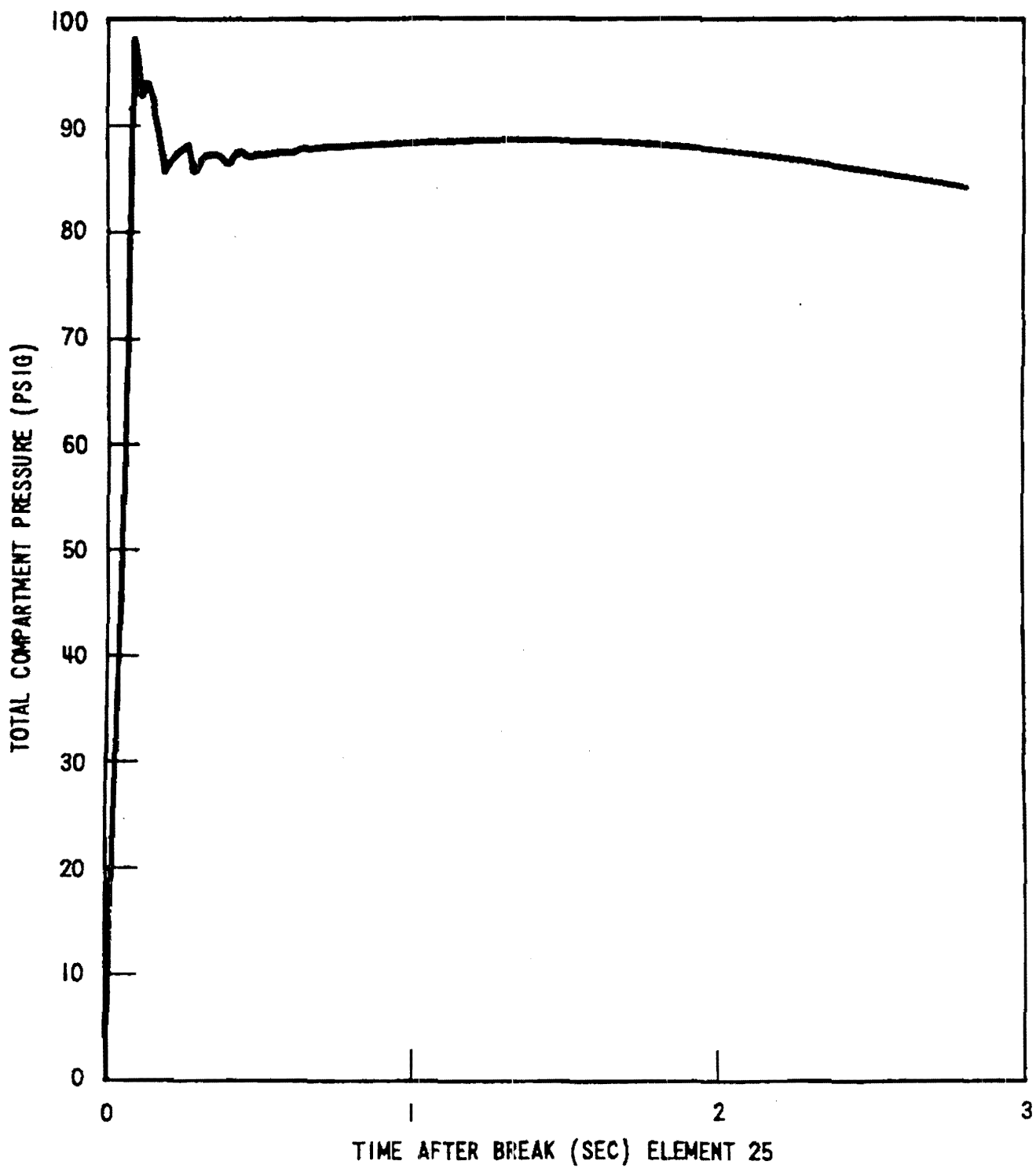

AMENDMENT 85

WATTS BAR NUCLEAR PLANT
FINAL SAFETY
ANALYSIS REPORT

127 SQUARE INCH COLD LEG BREAK
(REACTOR CAVITY ANALYSIS)
figure 6.2.1-31

SCANNED DOCUMENT
THIS IS A SCANNED DOCUMENT MAINTAINED ON THE WBNP OPTIGRAPHICS SCANNER DATABASE

Figure 6.2.1-31 127 Square Inch Cold Leg Break (Reactor Cavity Analysis)

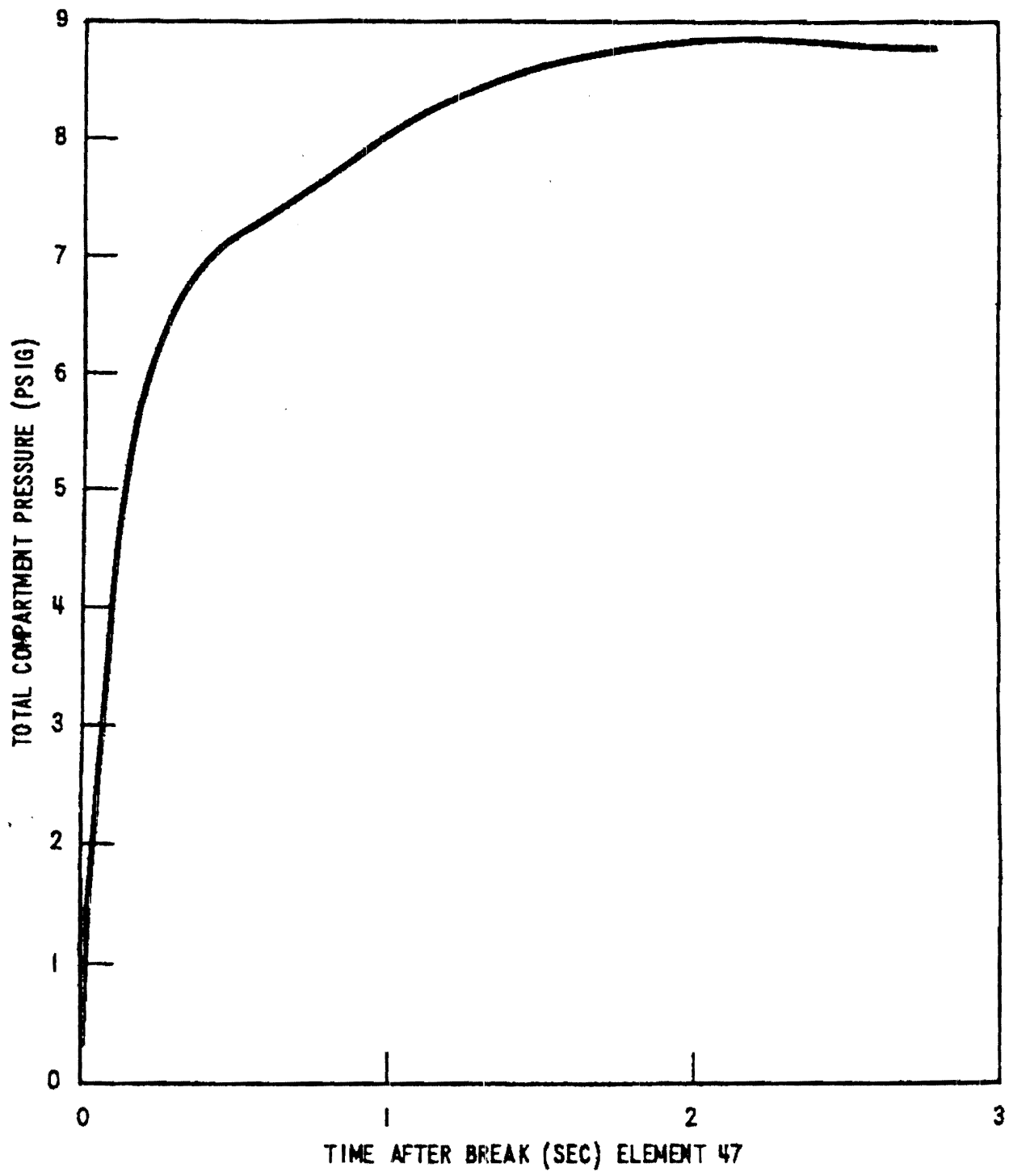

AMENDMENT 85

WATTS BAR NUCLEAR PLANT
FINAL SAFETY
ANALYSIS REPORT

127 SQUARE INCH COLD LEG BREAK
(REACTOR CAVITY ANALYSIS)
figure 6.2.1-32

SCANNED DOCUMENT
THIS IS A SCANNED DOCUMENT MAINTAINED ON THE WBNP OPTIGRAPHICS SCANNER DATABASE

Figure 6.2.1-32 127 Square Inch Cold Leg Break (Reactor Cavity Analysis)

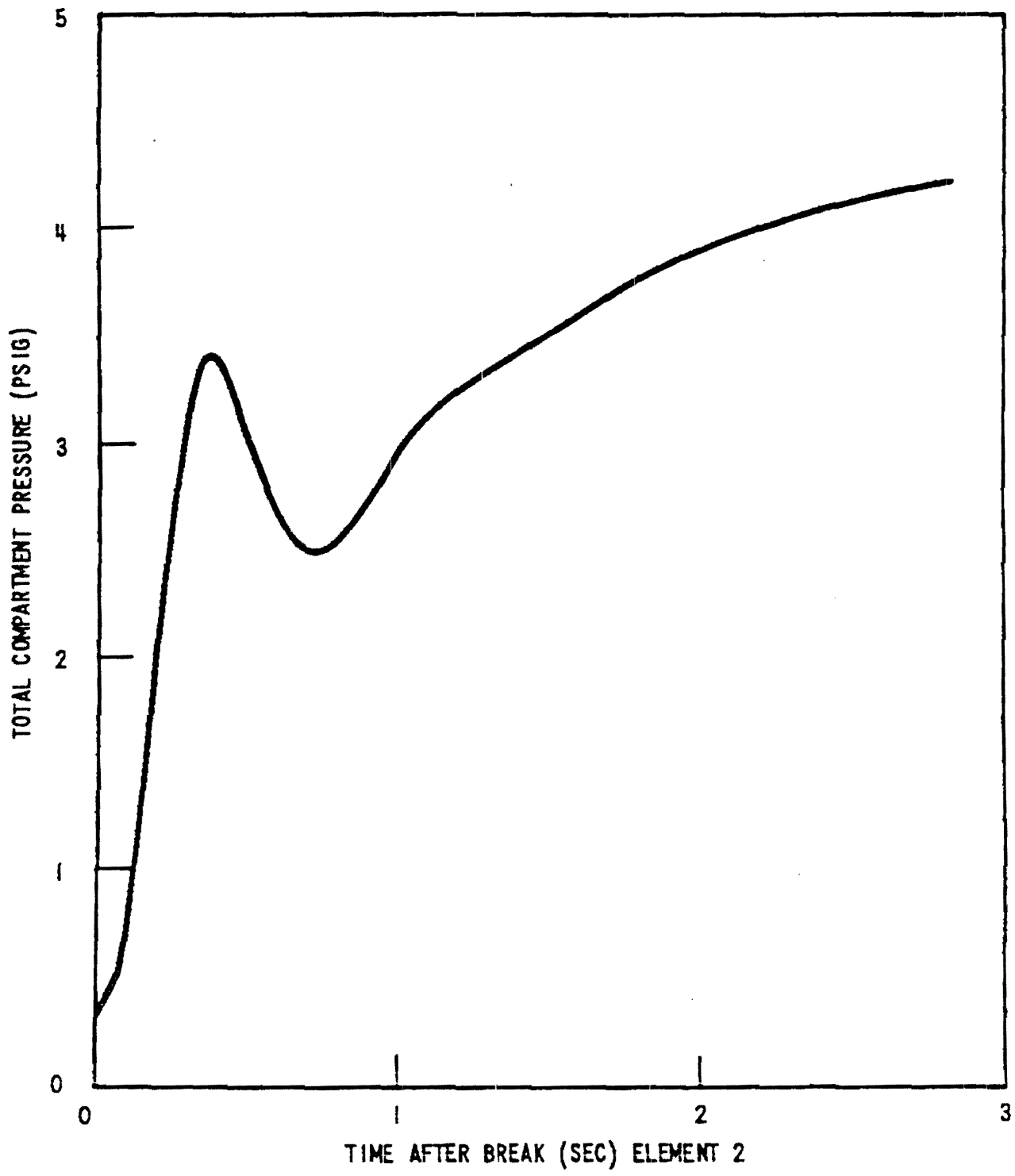

AMENDMENT 85

WATTS BAR NUCLEAR PLANT
FINAL SAFETY
ANALYSIS REPORT

127 SQUARE INCH COLD LEG BREAK
(REACTOR CAVITY ANALYSIS)
figure 6.2.1-33

SCANNED DOCUMENT
THIS IS A SCANNED DOCUMENT MAINTAINED ON THE WBNP OPTIGRAPHICS SCANNER DATABASE

Figure 6.2.1-33 127 Square Inch Cold Leg Break (Reactor Cavity Analysis)

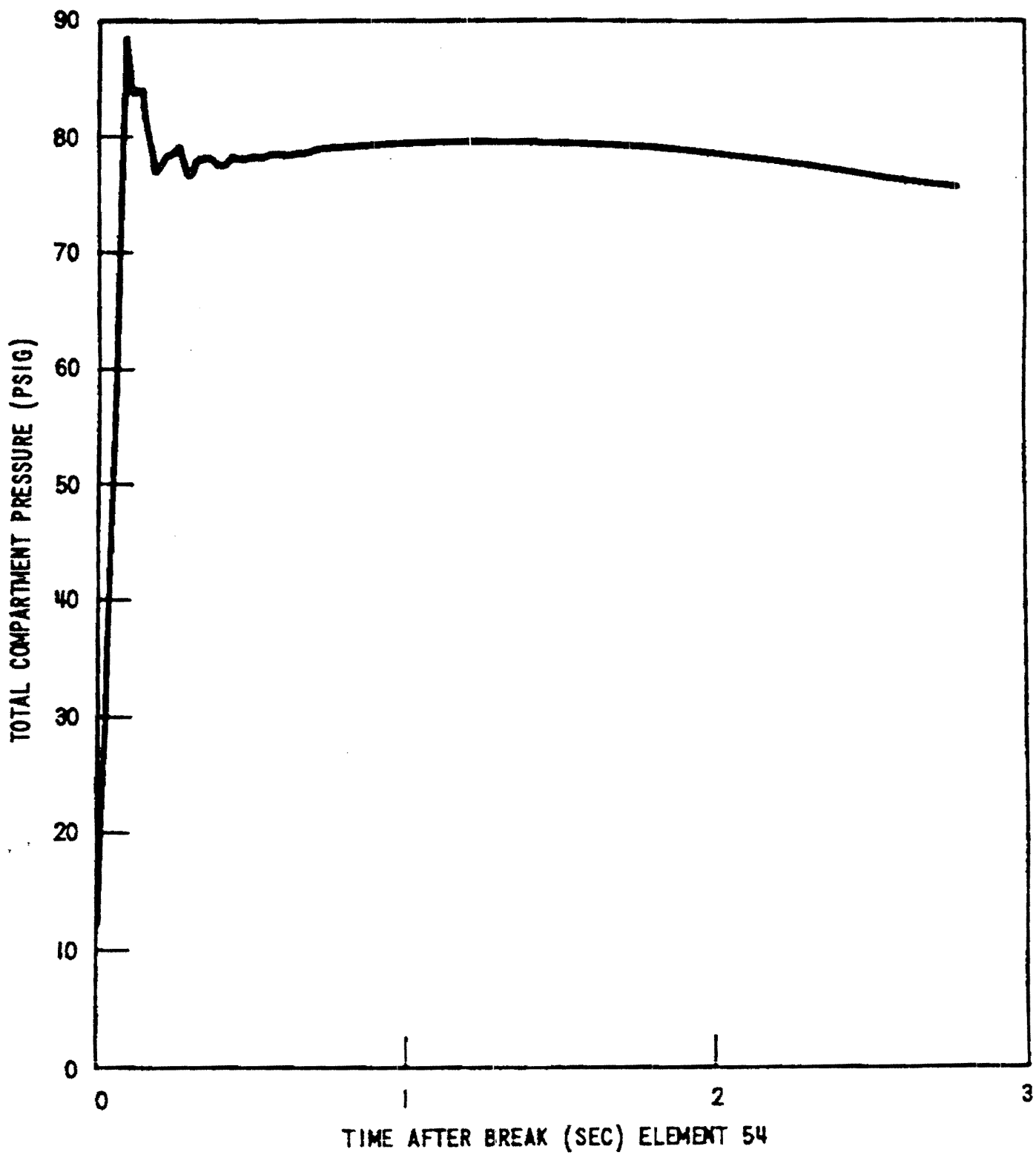

AMENDMENT 85

WATTS BAR NUCLEAR PLANT
FINAL SAFETY
ANALYSIS REPORT

127 SQUARE INCH COLD LEG BREAK
(REACTOR CAVITY ANALYSIS)
figure 6.2.1-34

SCANNED DOCUMENT
THIS IS A SCANNED DOCUMENT MAINTAINED ON
THE WBNP OPTIGRAPHICS SCANNER DATABASE

Figure 6.2.1-34 127 Square Inch Cold Leg Break (Reactor Cavity Analysis)

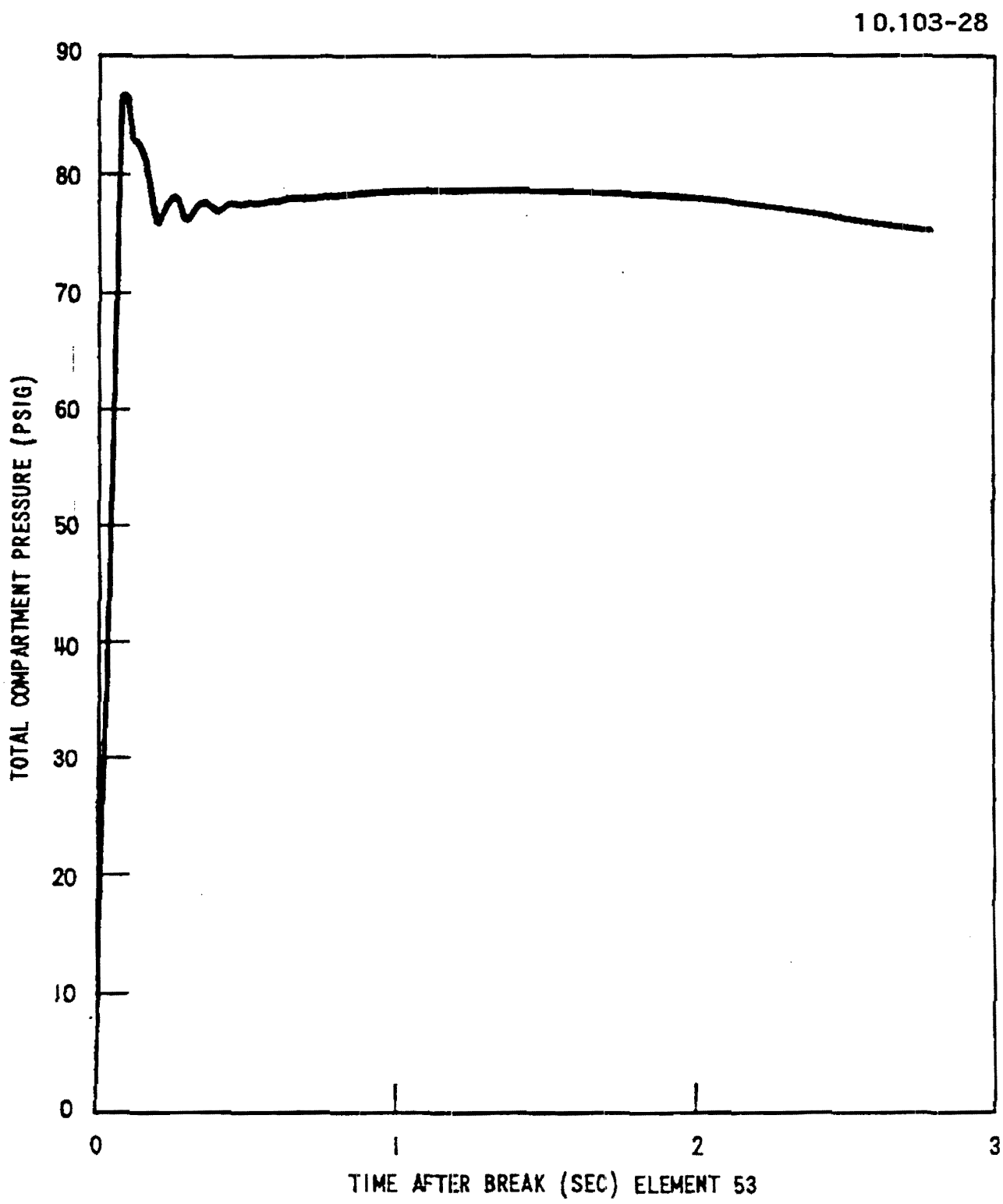

AMENDMENT 85

WATTS BAR NUCLEAR PLANT
FINAL SAFETY
ANALYSIS REPORT

127 SQUARE INCH COLD LEG BREAK
(REACTOR CAVITY ANALYSIS)
figure 6.2.1-35

SCANNED DOCUMENT
THIS IS A SCANNED DOCUMENT MAINTAINED ON THE WBNP OPTIGRAPHICS SCANNER DATABASE

Figure 6.2.1-35 127 Square Inch Cold Leg Break (Reactor Cavity Analysis)

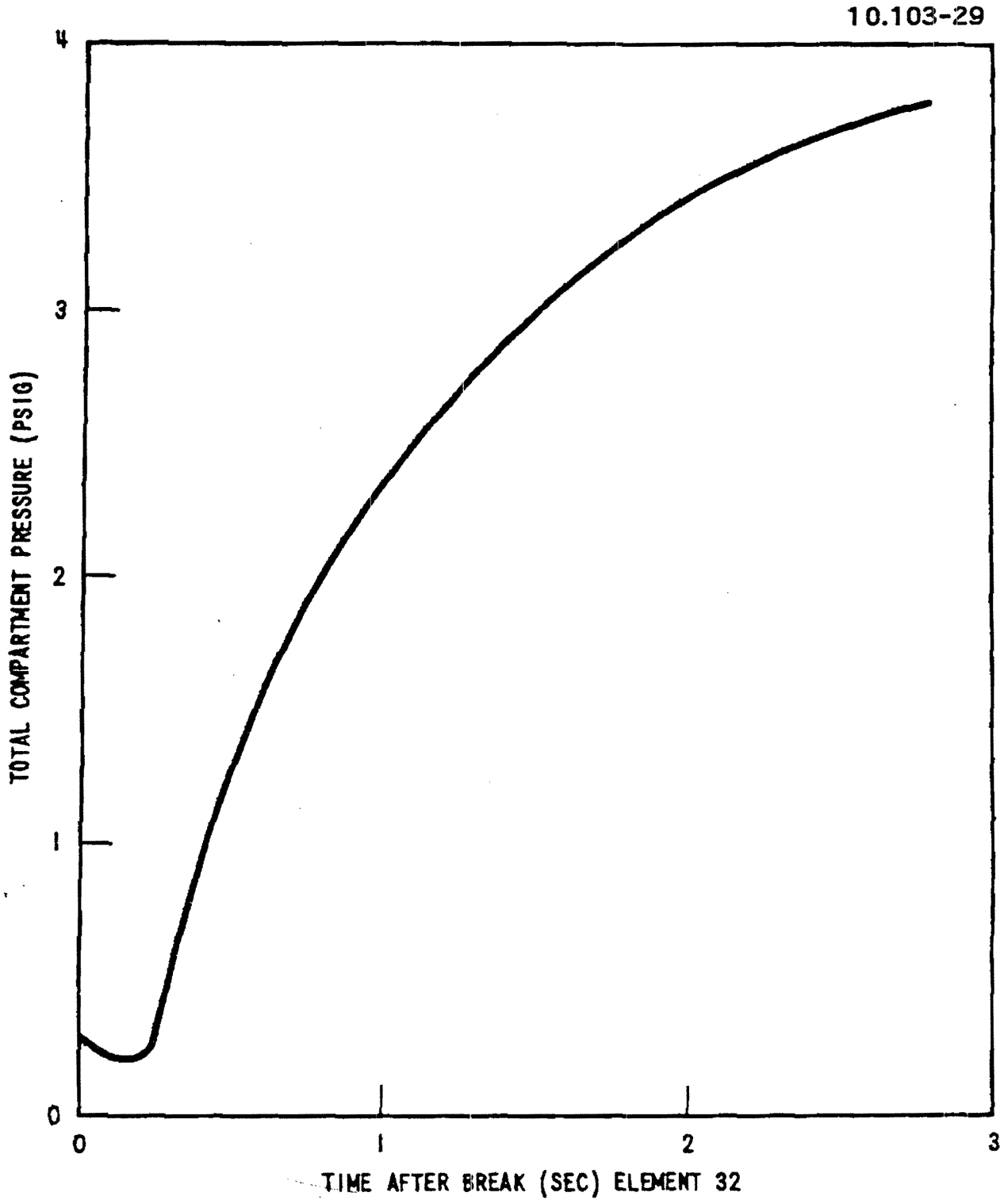

AMENDMENT 85

WATTS BAR NUCLEAR PLANT
FINAL SAFETY
ANALYSIS REPORT

127 SQUARE INCH COLD LEG BREAK
(REACTOR CAVITY ANALYSIS)
figure 6.2.1-36

SCANNED DOCUMENT
THIS IS A SCANNED DOCUMENT MAINTAINED ON THE WBNP OPTIGRAPHICS SCANNER DATABASE

Figure 6.2.1-36 127 Square Inch Cold Leg Break (Reactor Cavity Analysis)

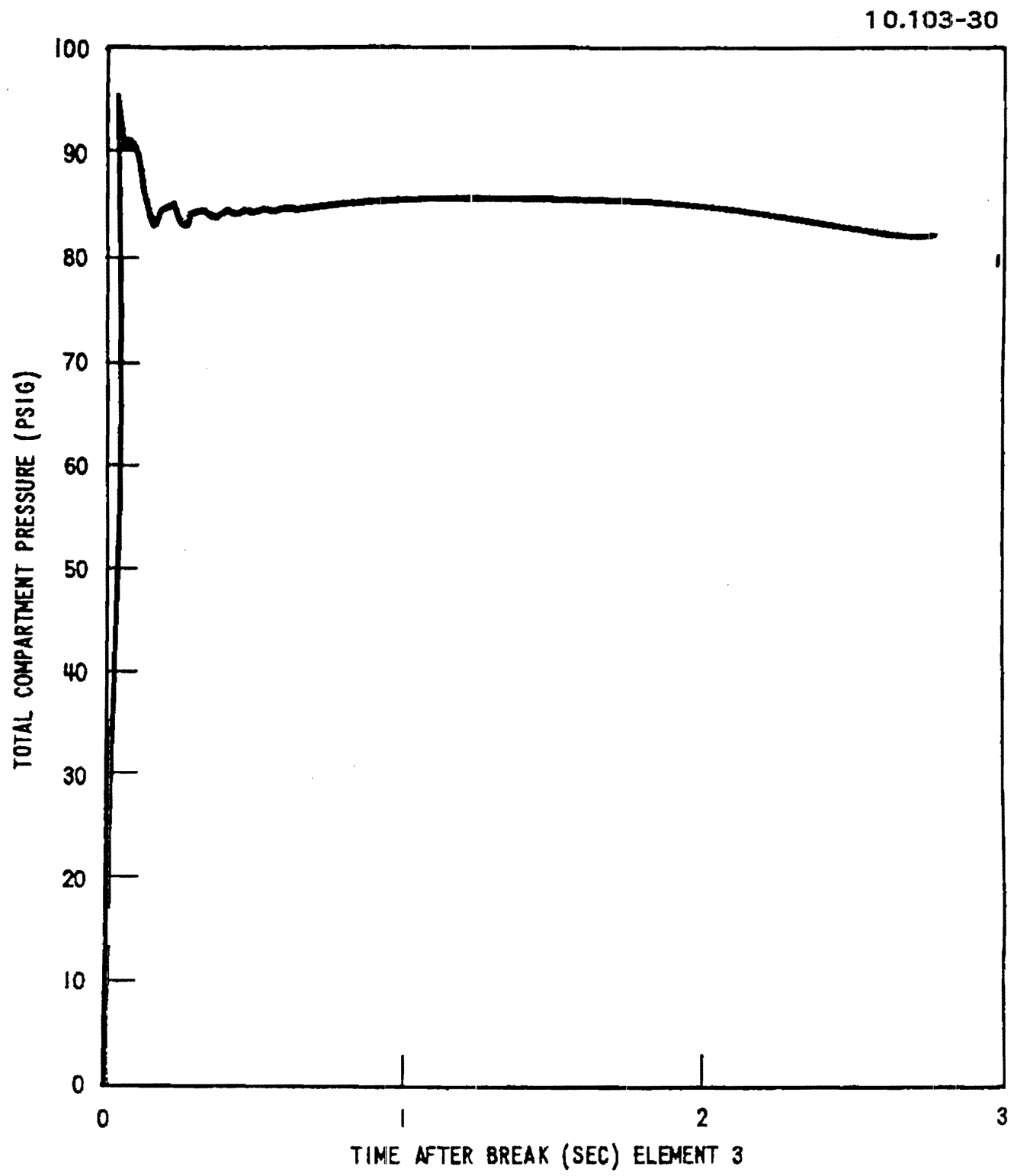

AMENDMENT 85

WATTS BAR NUCLEAR PLANT
FINAL SAFETY
ANALYSIS REPORT

127 SQUARE INCH COLD LEG BREAK
(REACTOR CAVITY ANALYSIS)
figure 6.2.1-37

SCANNED DOCUMENT
THIS IS A SCANNED DOCUMENT MAINTAINED ON THE WBNP OPTIGRAPHICS SCANNER DATABASE

Figure 6.2.1-37 127 Square Inch Cold Leg Break (Reactor Cavity Analysis)

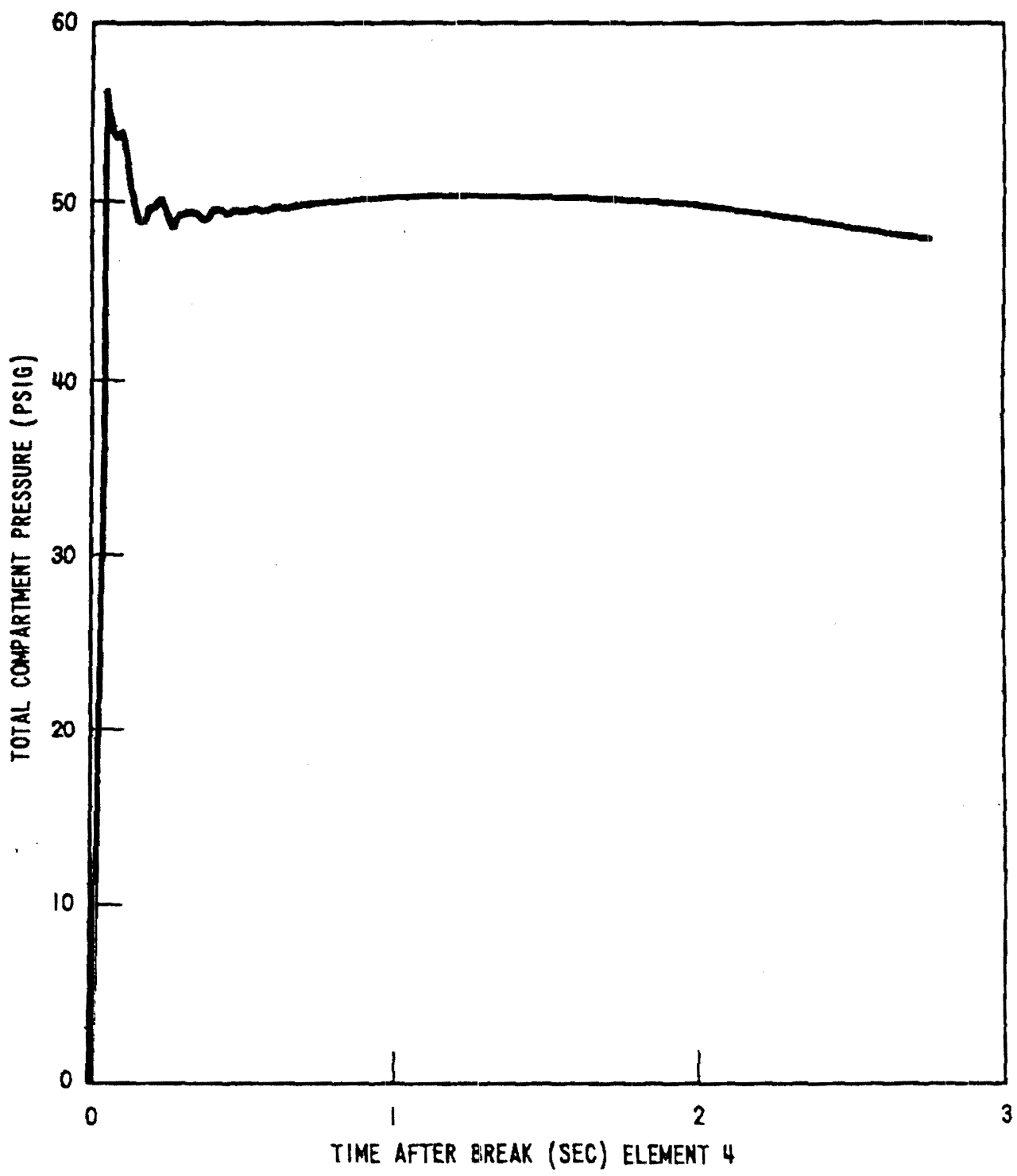

AMENDMENT 85

WATTS BAR NUCLEAR PLANT
FINAL SAFETY
ANALYSIS REPORT

127 SQUARE INCH COLD LEG BREAK
(REACTOR CAVITY ANALYSIS)
figure 6.2.1-38

SCANNED DOCUMENT
THIS IS A SCANNED DOCUMENT MAINTAINED ON THE WBNP OPTIGRAPHICS SCANNER DATABASE

Figure 6.2.1-38 127 Square Inch Cold Leg Break (Reactor Cavity Analysis)

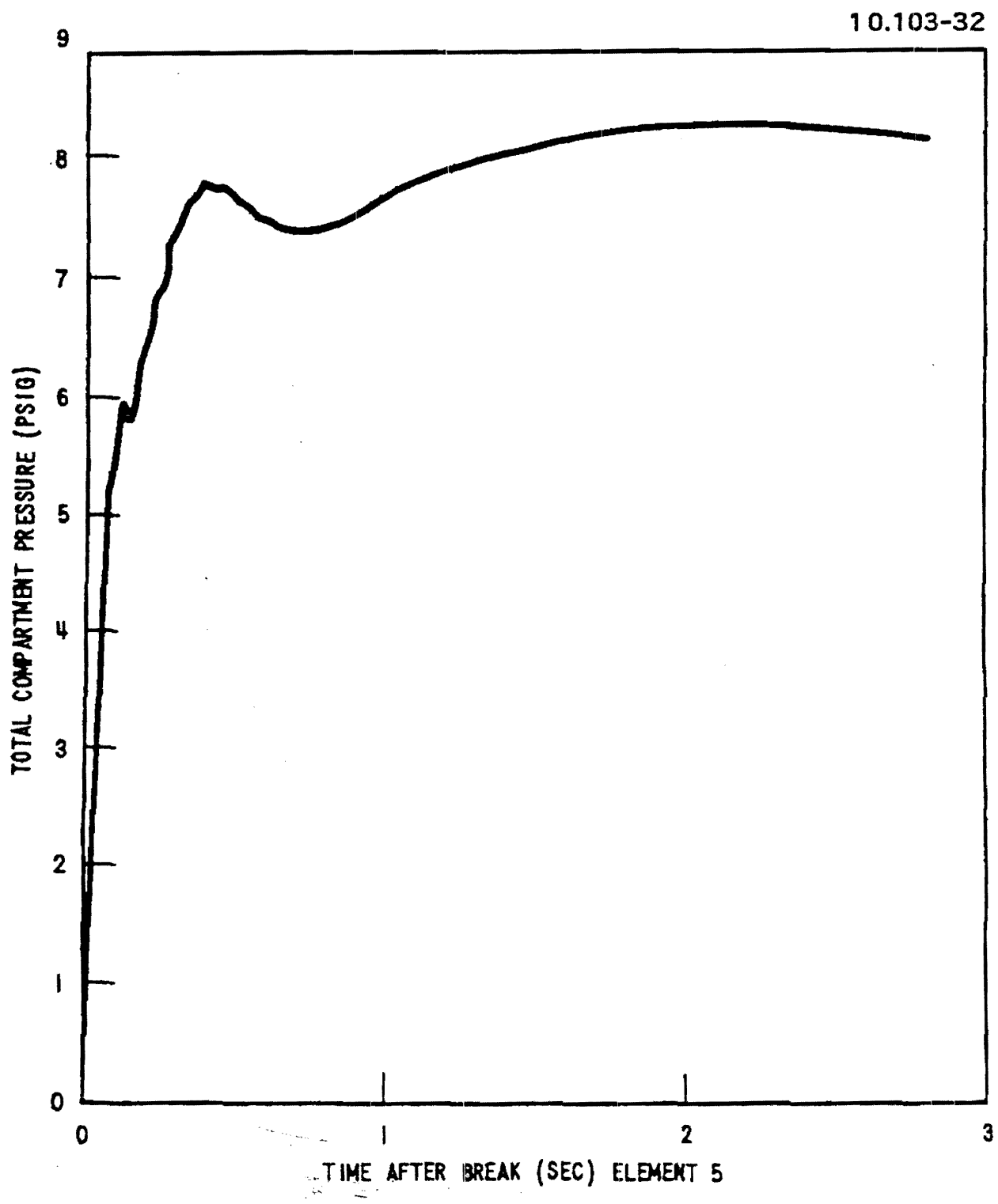

AMENDMENT 85

WATTS BAR NUCLEAR PLANT
FINAL SAFETY
ANALYSIS REPORT

1 27 SQUARE INCH COLD LEG BREAK
(REACTOR CAVITY ANALYSIS)
figure 6.2.1- 39

SCANNED DOCUMENT
THIS IS A SCANNED DOCUMENT MAINTAINED ON
THE WBNP OPTIGRAPHICS SCANNER DATABASE

Figure 6.2.1-39 127 Square Inch Cold Leg Break (Reactor Cavity Analysis)

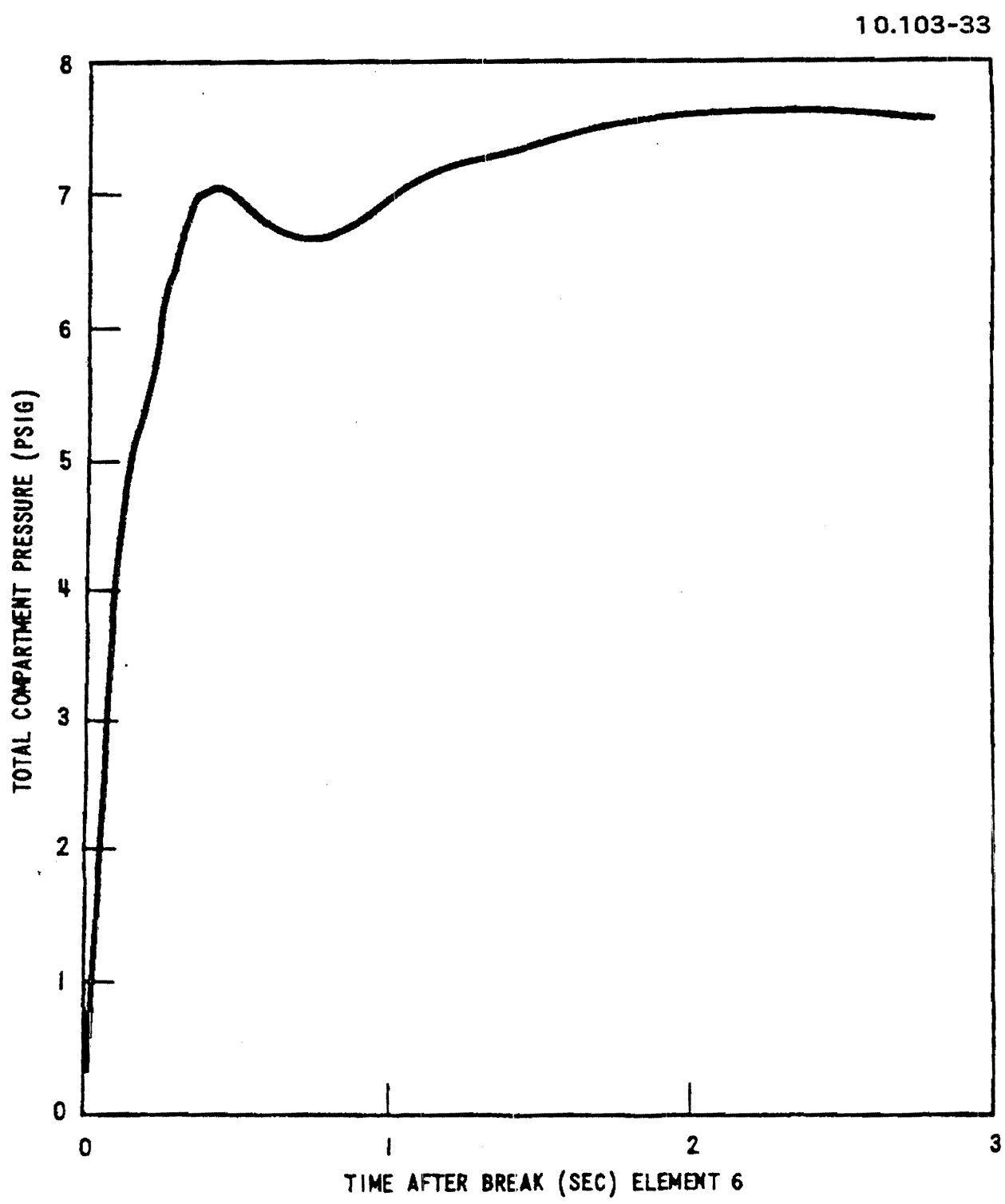

AMENDMENT 85

WATTS BAR NUCLEAR PLANT
FINAL SAFETY
ANALYSIS REPORT

127 SQUARE INCH COLD LEG BREAK
(REACTOR CAVITY ANALYSIS)
figure 6.2.1-40

SCANNED DOCUMENT
THIS IS A SCANNED DOCUMENT MAINTAINED ON THE WBNP OPTIGRAPHICS SCANNER DATABASE

Figure 6.2.1-40 127 Square Inch Cold Leg Break (Reactor Cavity Analysis)

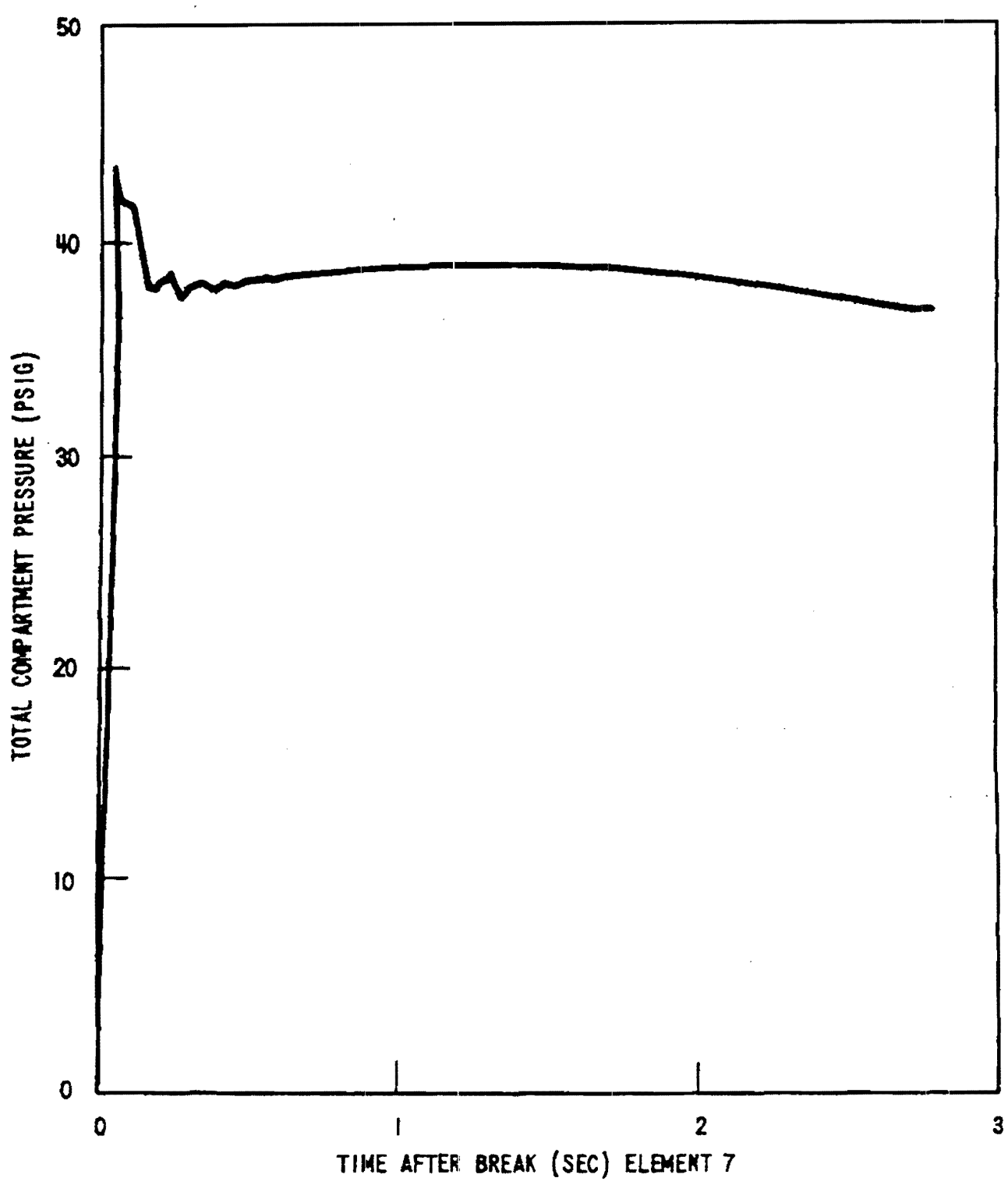

AMENDMENT 85

WATTS BAR NUCLEAR PLANT
FINAL SAFETY
ANALYSIS REPORT

1 27 SQUARE INCH COLD LEG BREAK
(REACTOR CAVITY ANALYSIS)
figure 6.2.1-41

SCANNED DOCUMENT
THIS IS A SCANNED DOCUMENT MAINTAINED ON THE WBNP OPTIGRAPHICS SCANNER DATABASE

Figure 6.2.1-41 127 Square Inch Cold Leg Break (Reactor Cavity Analysis)

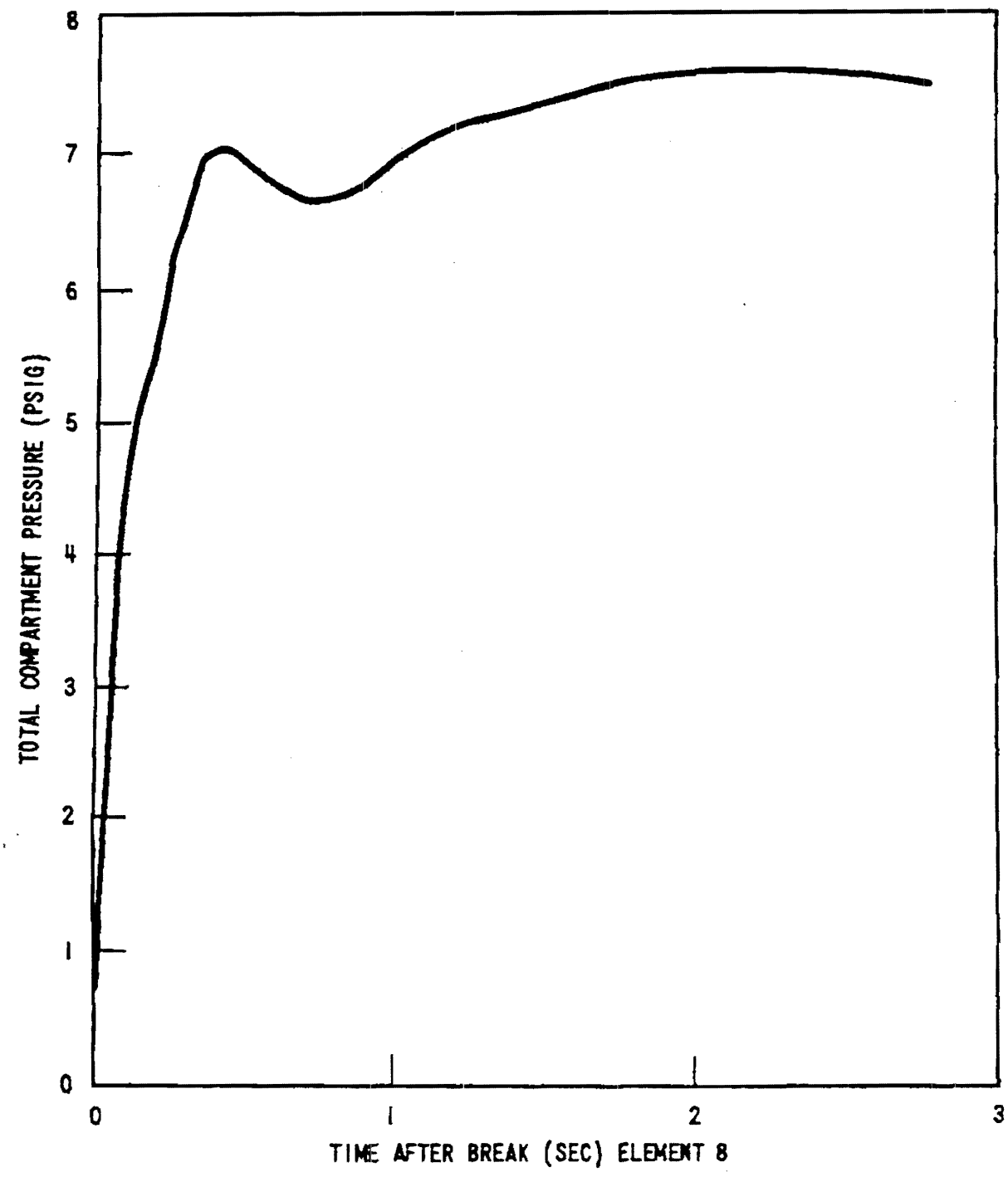

AMENDMENT 85

WATTS BAR NUCLEAR PLANT
FINAL SAFETY
ANALYSIS REPORT

127 SQUARE INCH COLD LEG BREAK
(REACTOR CAVITY ANALYSIS)
figure 6.2.1-42

SCANNED DOCUMENT
THIS IS A SCANNED DOCUMENT MAINTAINED ON THE WBNP OPTIGRAPHICS SCANNER DATABASE

Figure 6.2.1-42 127 Square Inch Cold Leg Break (Reactor Cavity Analysis)

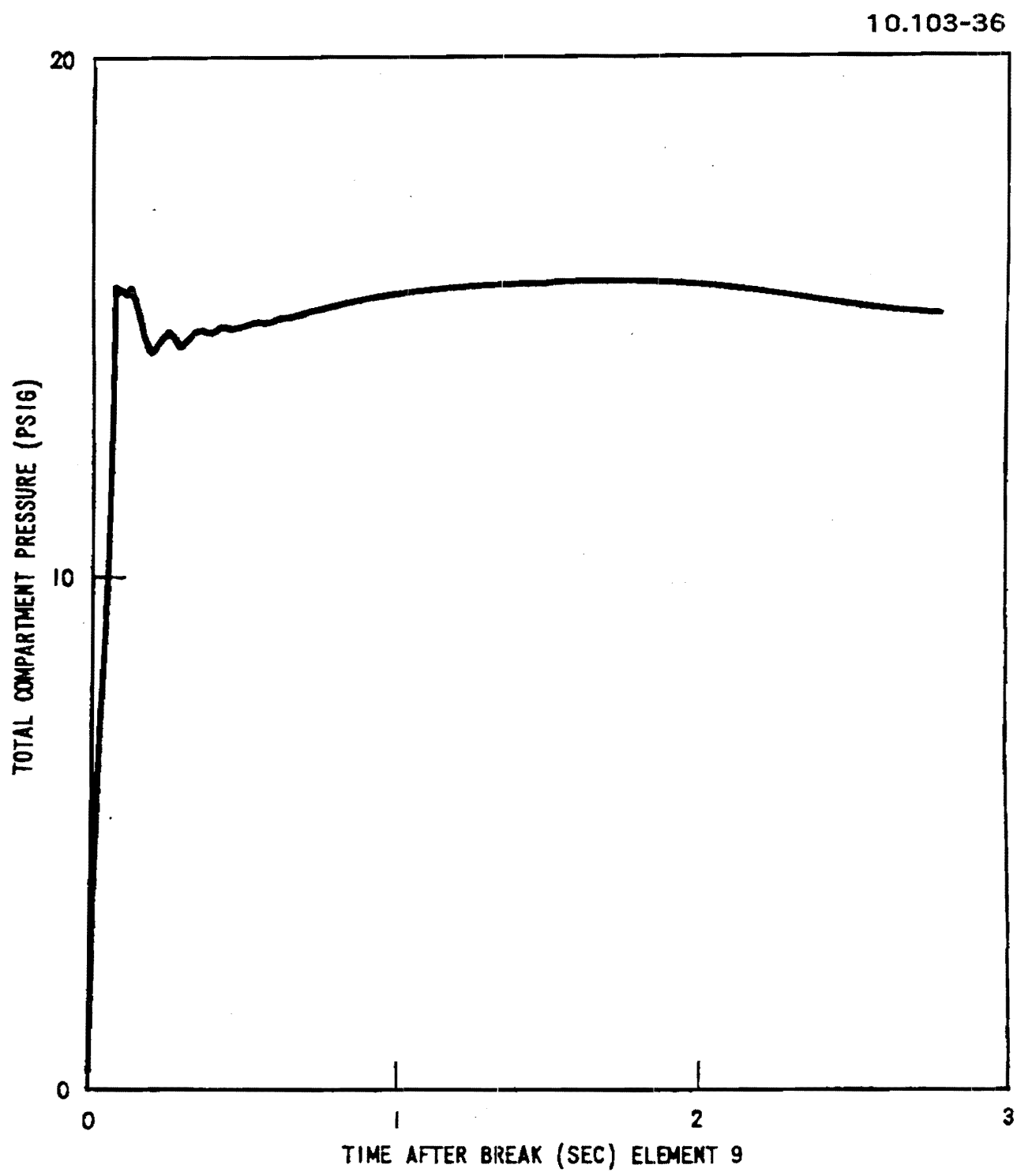

AMENDMENT 85

WATTS BAR NUCLEAR PLANT
FINAL SAFETY
ANALYSIS REPORT

1 27 SQUARE INCH COLD LEG BREAK
(REACTOR CAVITY ANALYSIS)
figure 6.2.1-43

SCANNED DOCUMENT
THIS IS A SCANNED DOCUMENT MAINTAINED ON THE WBNP OPTIGRAPHICS SCANNER DATABASE

Figure 6.2.1-43 127 Square Inch Cold Leg Break (Reactor Cavity Analysis)

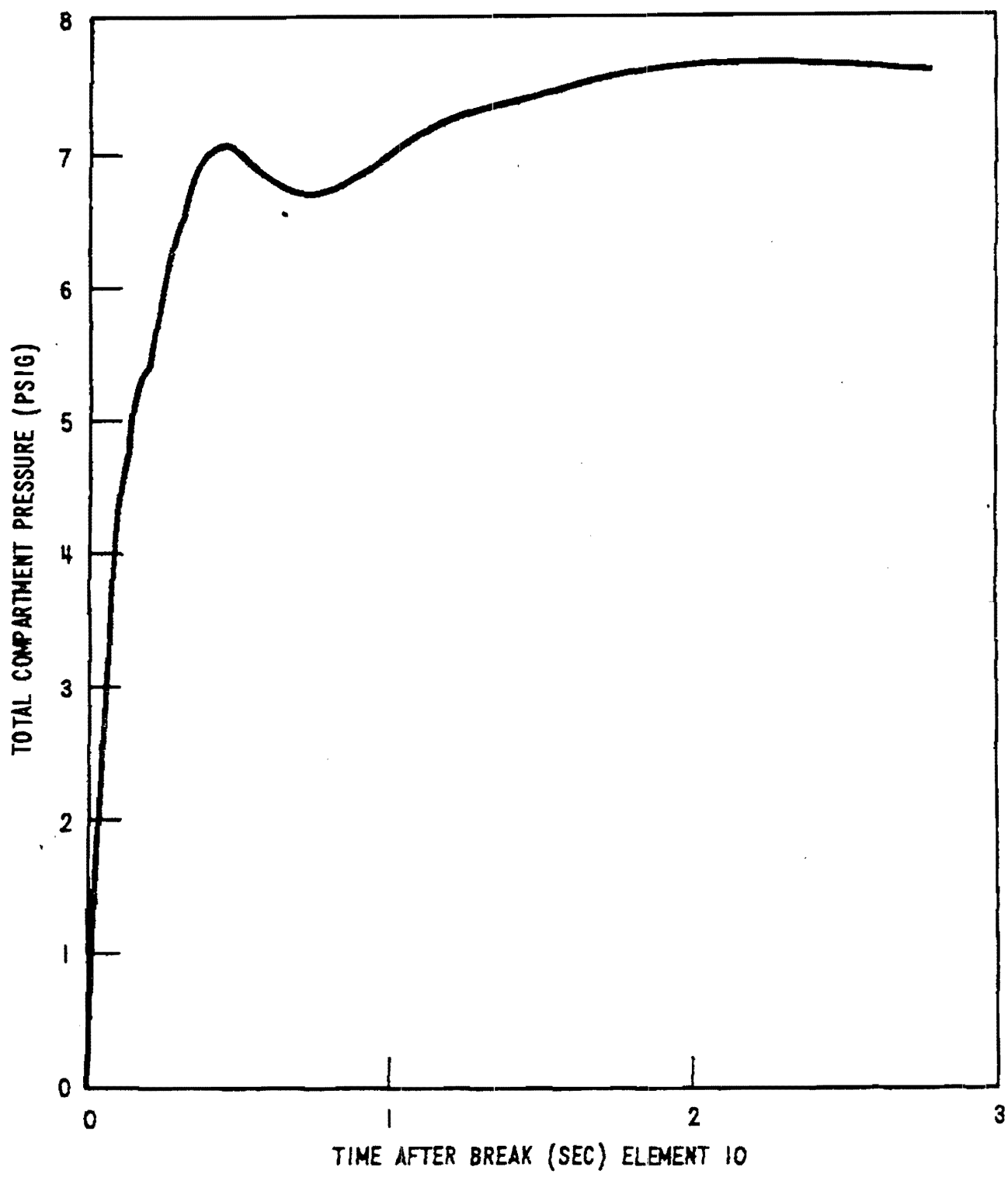

AMENDMENT 85

WATTS BAR NUCLEAR PLANT
FINAL SAFETY
ANALYSIS REPORT

127 SQUARE INCH COLD LEG BREAK
(REACTOR CAVITY ANALYSIS)
figure 6.2.1-44

SCANNED DOCUMENT
THIS IS A SCANNED DOCUMENT MAINTAINED ON
THE WBNP OPTIGRAPHICS SCANNER DATABASE

Figure 6.2.1-44 127 Square Inch Cold Leg Break (Reactor Cavity Analysis)

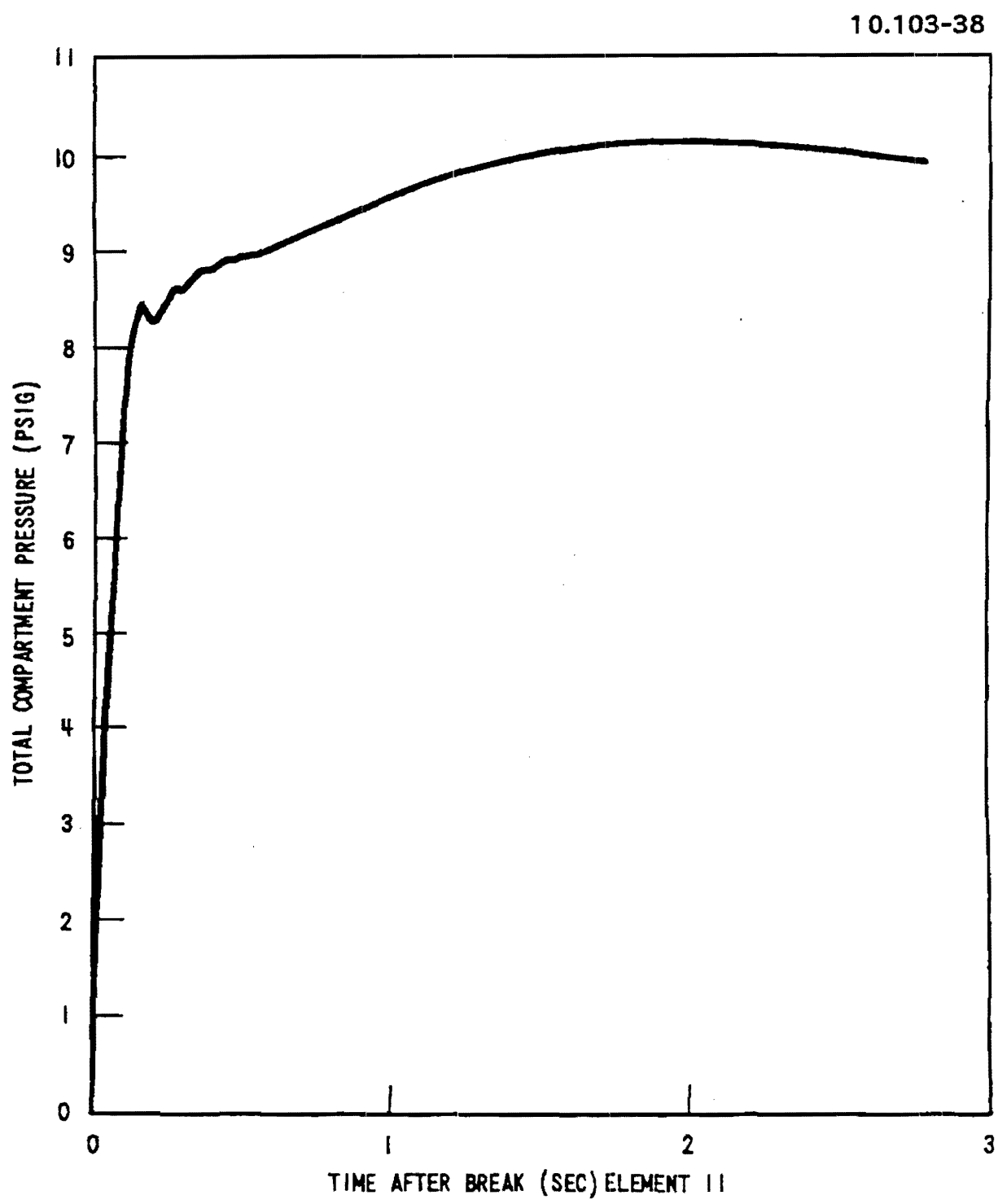

AMENDMENT 85

WATTS BAR NUCLEAR PLANT
FINAL SAFETY
ANALYSIS REPORT

127 SQUARE INCH COLD LEG BREAK
(REACTOR CAVITY ANALYSIS)
figure 6.2.1- 45

SCANNED DOCUMENT
THIS IS A SCANNED DOCUMENT MAINTAINED ON THE WBNP OPTIGRAPHICS SCANNER DATABASE

Figure 6.2.1-45 127 Square Inch Cold Leg Break (Reactor Cavity Analysis)

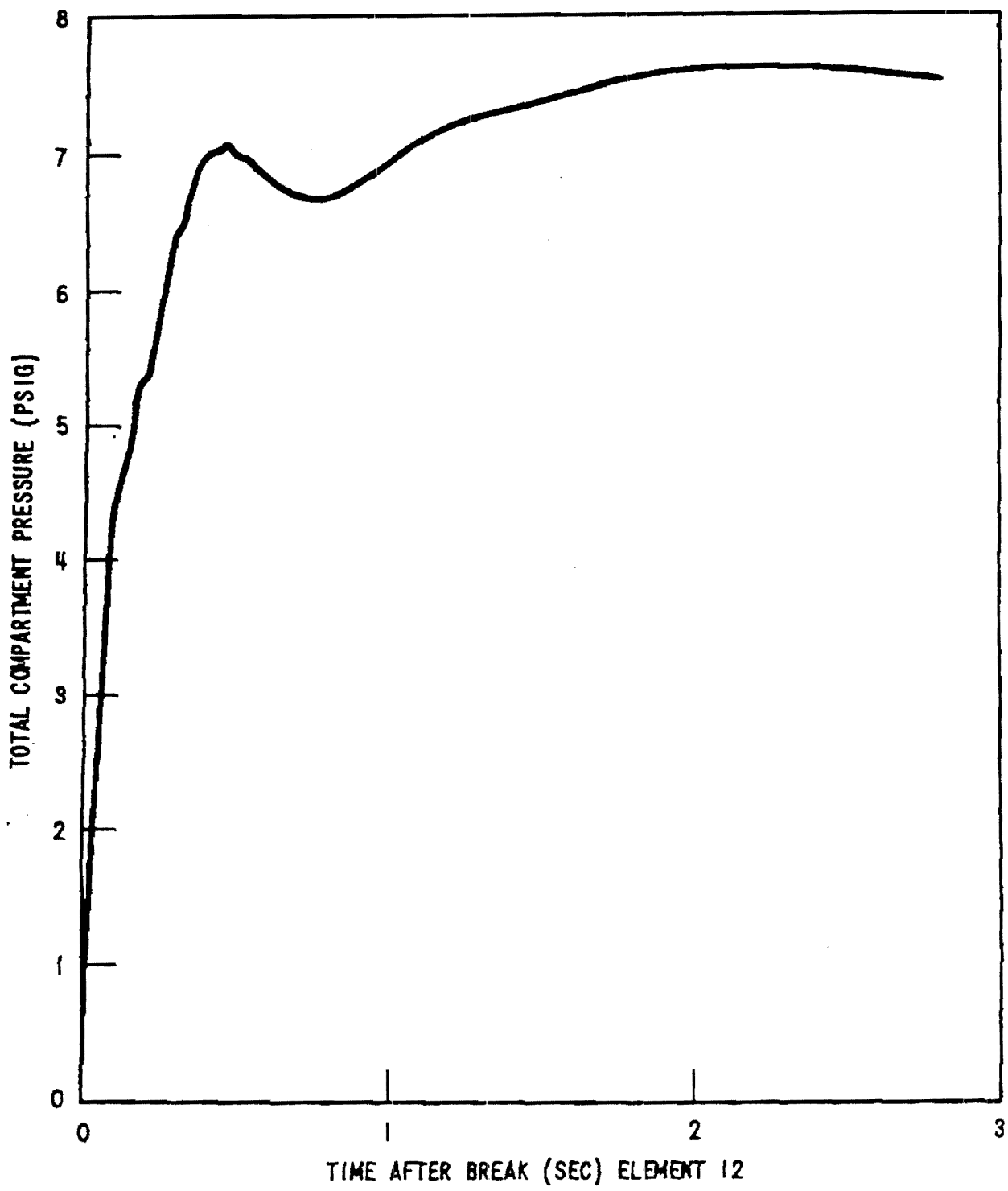

AMENDMENT 85

WATTS BAR NUCLEAR PLANT
FINAL SAFETY
ANALYSIS REPORT

127 SQUARE INCH COLD LEG BREAK
(REACTOR CAVITY ANALYSIS)
figure 6.2.1-46

SCANNED DOCUMENT
THIS IS A SCANNED DOCUMENT MAINTAINED ON THE WBNP OPTIGRAPHICS SCANNER DATABASE

Figure 6.2.1-46 127 Square Inch Cold Leg Break (Reactor Cavity Analysis)

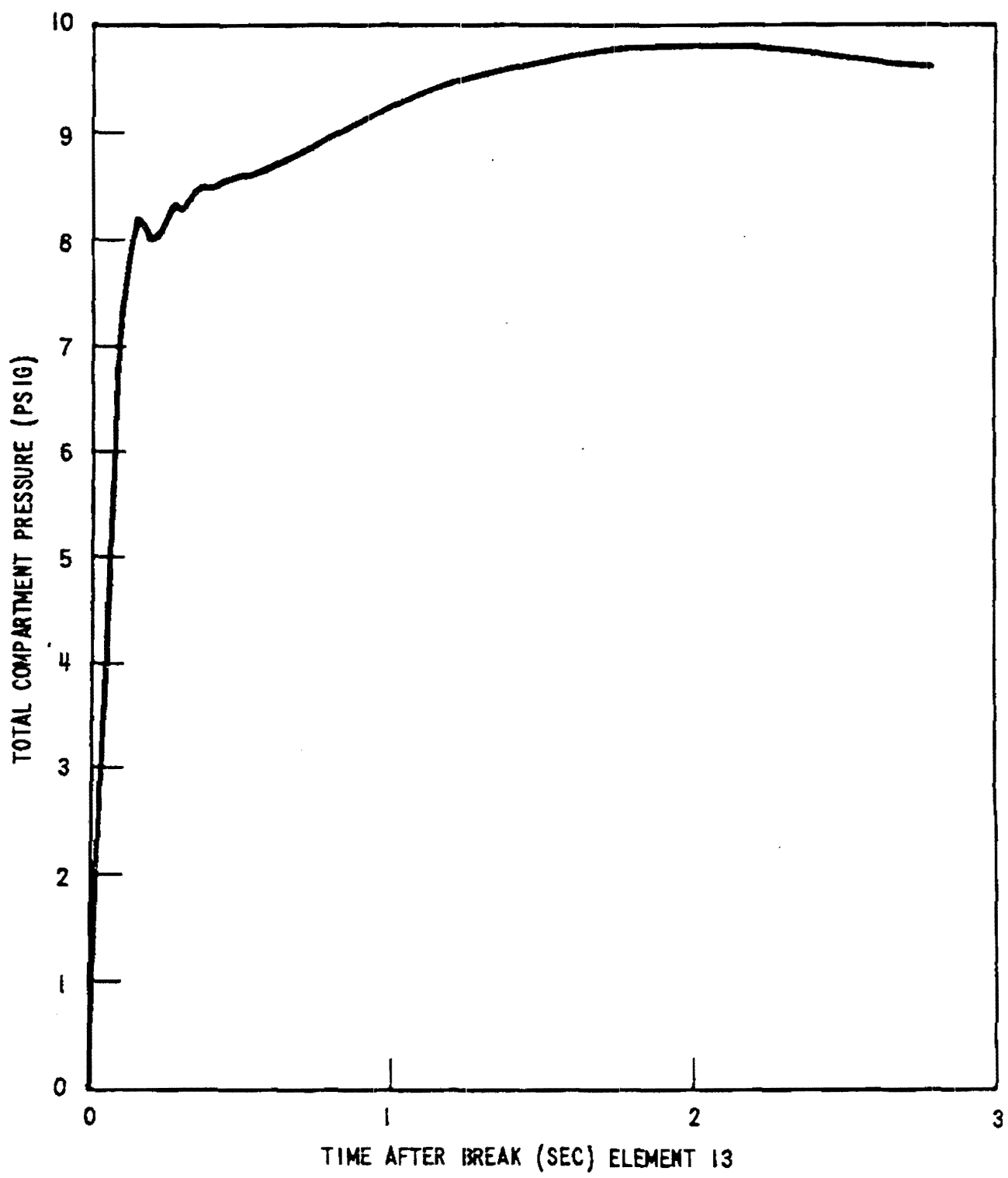

AMENDMENT 85

WATTS BAR NUCLEAR PLANT
FINAL SAFETY
ANALYSIS REPORT

127 SQUARE INCH COLD LEG BREAK
(REACTOR CAVITY ANALYSIS)
figure 6.2.1-47

SCANNED DOCUMENT
THIS IS A SCANNED DOCUMENT MAINTAINED ON THE WBNP OPTIGRAPHICS SCANNER DATABASE

Figure 6.2.1-47 127 Square Inch Cold Leg Break (Reactor Cavity Analysis)

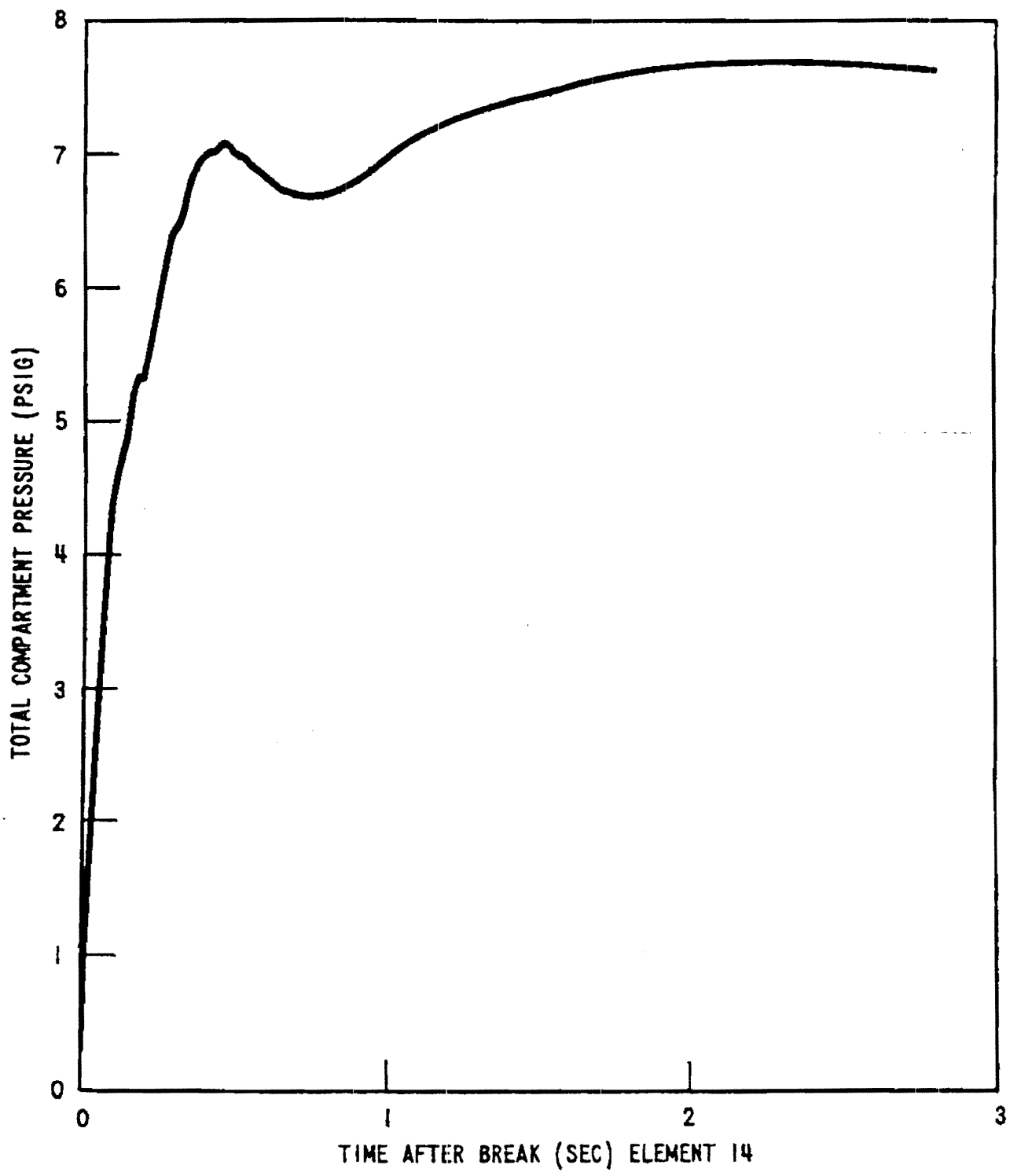

AMENDMENT 85

WATTS BAR NUCLEAR PLANT
FINAL SAFETY
ANALYSIS REPORT

1 27 SQUARE INCH COLD LEG BREAK
(REACTOR CAVITY ANALYSIS)
figure 6.2.1-48

SCANNED DOCUMENT
THIS IS A SCANNED DOCUMENT MAINTAINED ON THE WBNP OPTIGRAPHICS SCANNER DATABASE

Figure 6.2.1-48 127 Square Inch Cold Leg Break (Reactor Cavity Analysis)

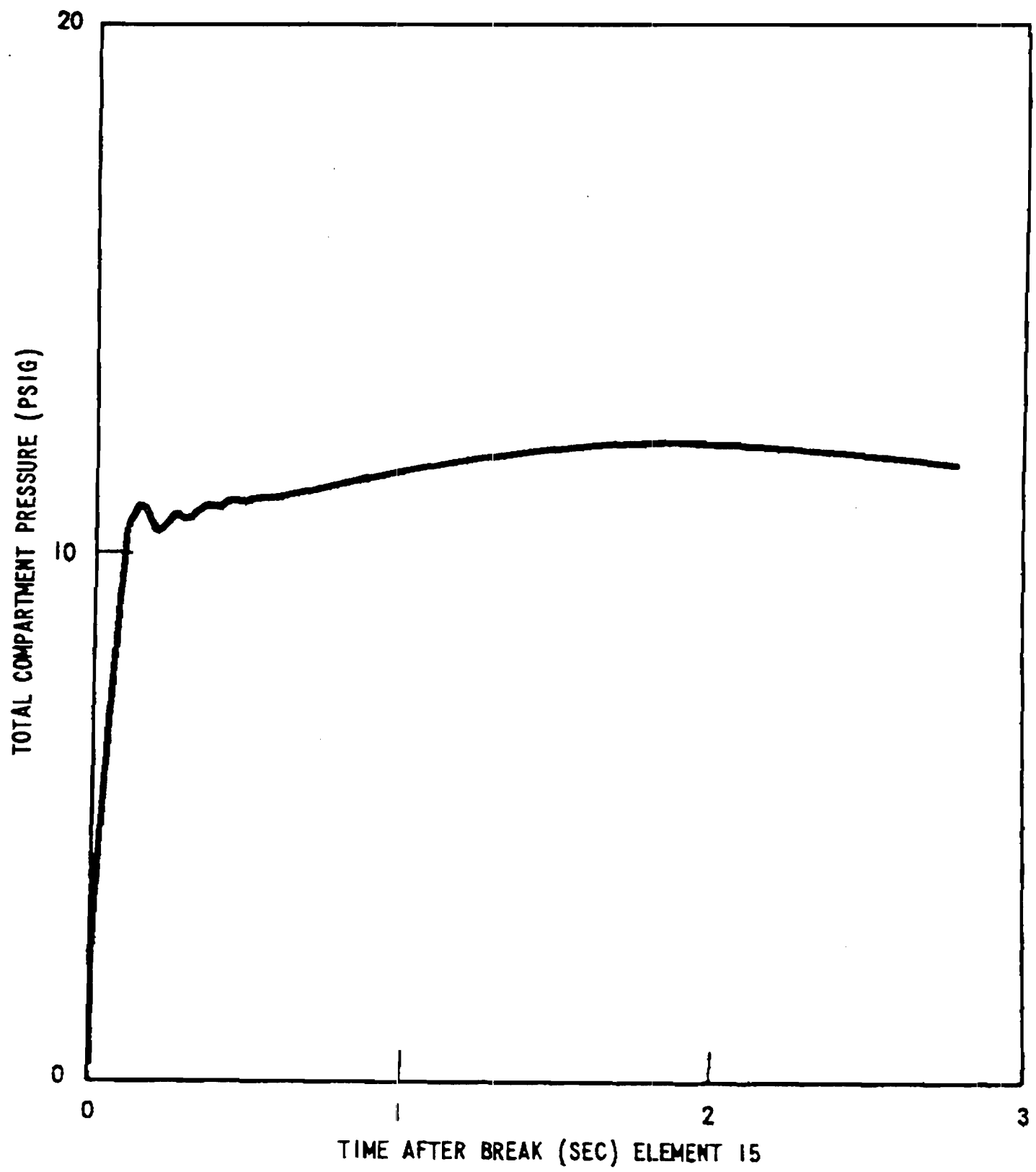

AMENDMENT 85

WATTS BAR NUCLEAR PLANT
FINAL SAFETY
ANALYSIS REPORT

1 27 SQUARE INCH COLD LEG BREAK
(REACTOR CAVITY ANALYSIS)
figure 6.2.1-49

SCANNED DOCUMENT
THIS IS A SCANNED DOCUMENT MAINTAINED ON THE WBNP OPTIGRAPHICS SCANNER DATABASE

Figure 6.2.1-49 127 Square Inch Cold Leg Break (Reactor Cavity Analysis)

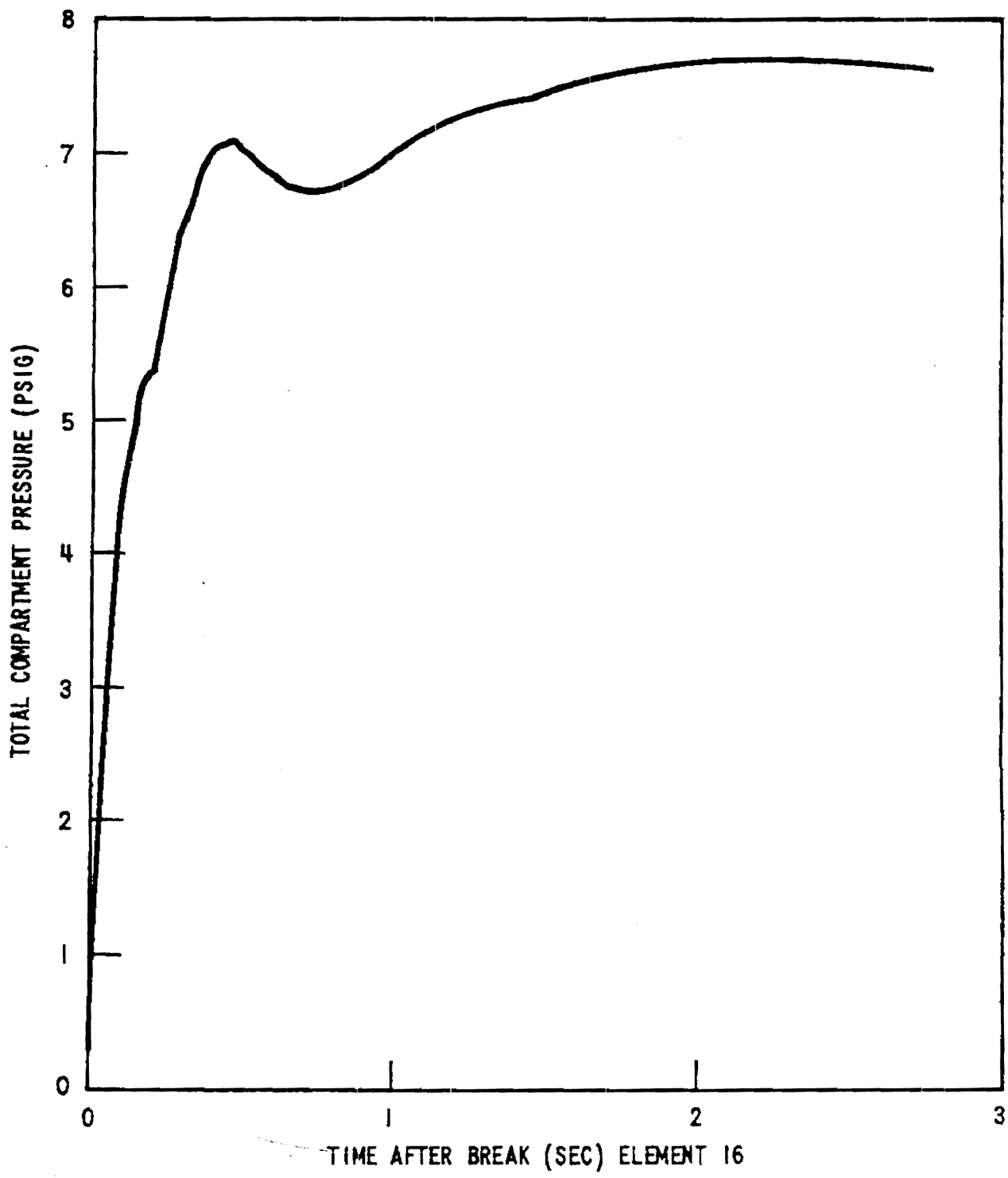

AMENDMENT 85

WATTS BAR NUCLEAR PLANT
FINAL SAFETY
ANALYSIS REPORT

1 27 SQUARE INCH COLD LEG BREAK
(REACTOR CAVITY ANALYSIS)
figure 6.2.1- 50

SCANNED DOCUMENT
THIS IS A SCANNED DOCUMENT MAINTAINED ON THE WBNP OPTIGRAPHICS SCANNER DATABASE

Figure 6.2.1-50 127 Square Inch Cold Leg Break (Reactor Cavity Analysis)

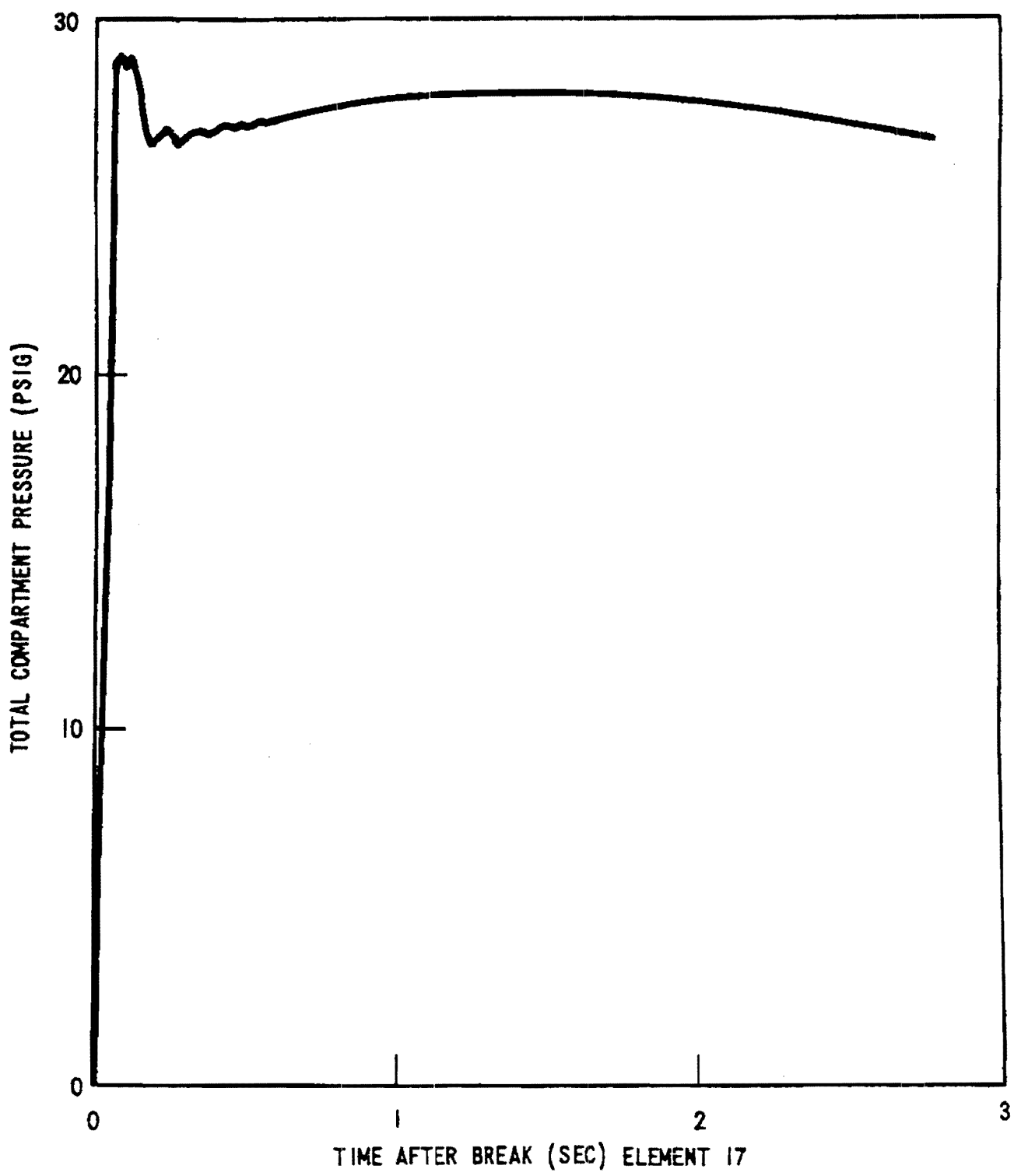

AMENDMENT 85

WATTS BAR NUCLEAR PLANT
FINAL SAFETY
ANALYSIS REPORT

127 SQUARE INCH COLD LEG BREAK
(REACTOR CAVITY ANALYSIS)
figure 6.2.1-51

SCANNED DOCUMENT
THIS IS A SCANNED DOCUMENT MAINTAINED ON THE WBNP OPTIGRAPHICS SCANNER DATABASE

Figure 6.2.1-51 127 Square Inch Cold Leg Break (Reactor Cavity Analysis)

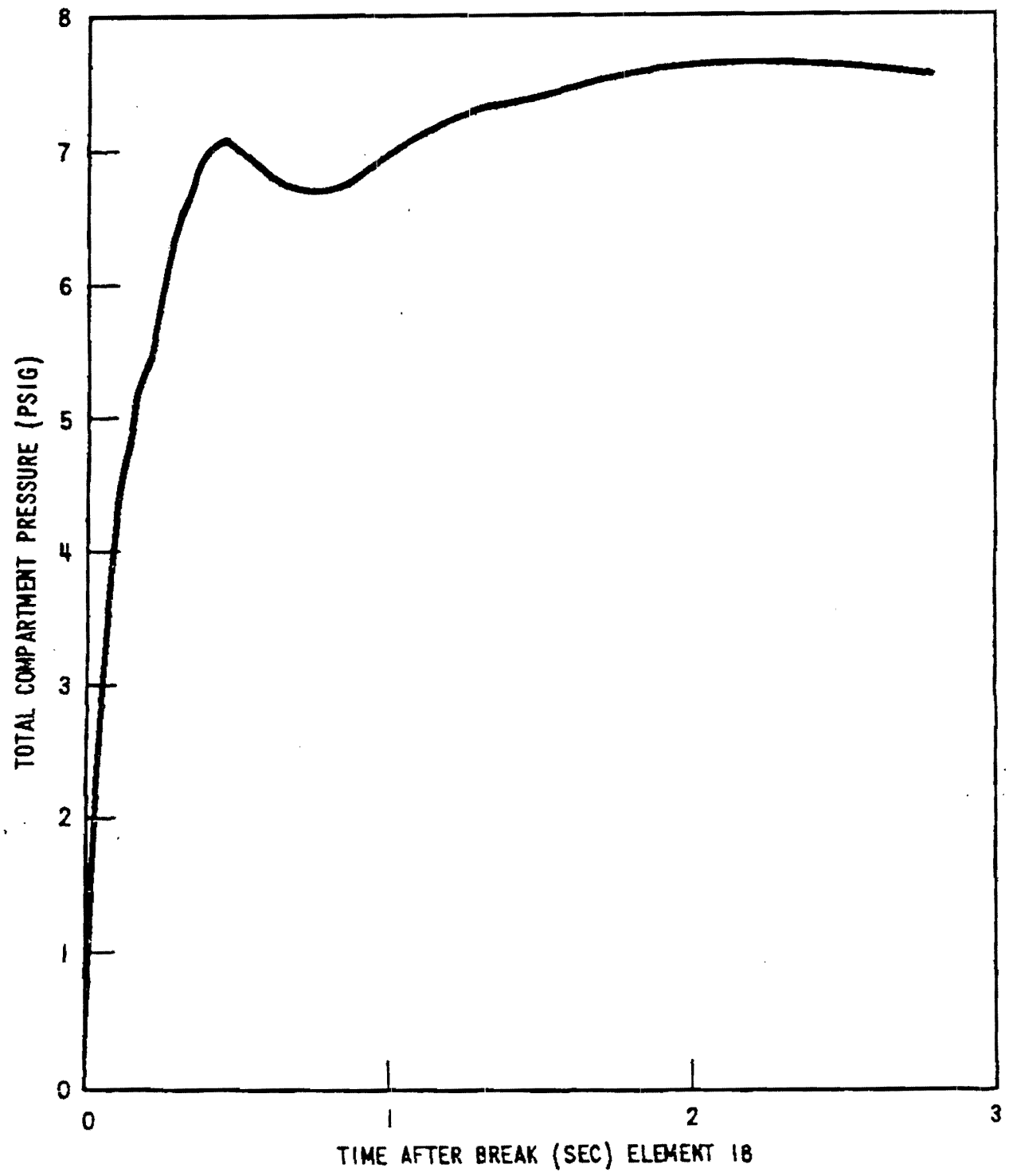

AMENDMENT 85

WATTS BAR NUCLEAR PLANT
FINAL SAFETY
ANALYSIS REPORT

127 SQUARE INCH COLD LEG BREAK
(REACTOR CAVITY ANALYSIS)
figure 6.2.1-52

SCANNED DOCUMENT
THIS IS A SCANNED DOCUMENT MAINTAINED ON
THE WBNP OPTIGRAPHICS SCANNER DATABASE

Figure 6.2.1-52 127 Square Inch Cold Leg Break (Reactor Cavity Analysis)

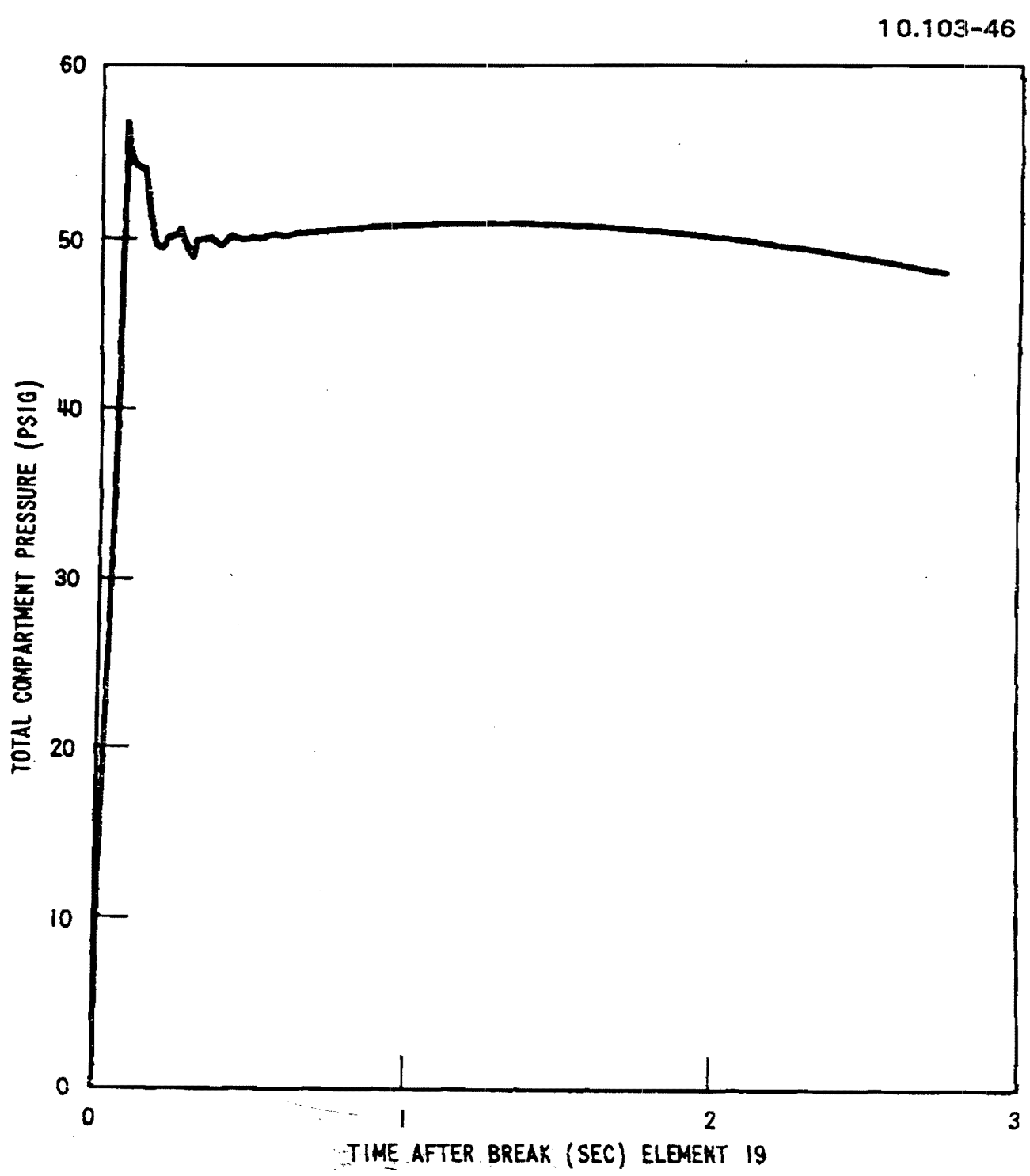

AMENDMENT 85

WATTS BAR NUCLEAR PLANT
FINAL SAFETY
ANALYSIS REPORT

127 SQUARE INCH COLD LEG BREAK
(REACTOR CAVITY ANALYSIS)
figure 6.2.1-53

SCANNED DOCUMENT
THIS IS A SCANNED DOCUMENT MAINTAINED ON THE WBNP OPTIGRAPHICS SCANNER DATABASE

Figure 6.2.1-53 127 Square Inch Cold Leg Break (Reactor Cavity Analysis)

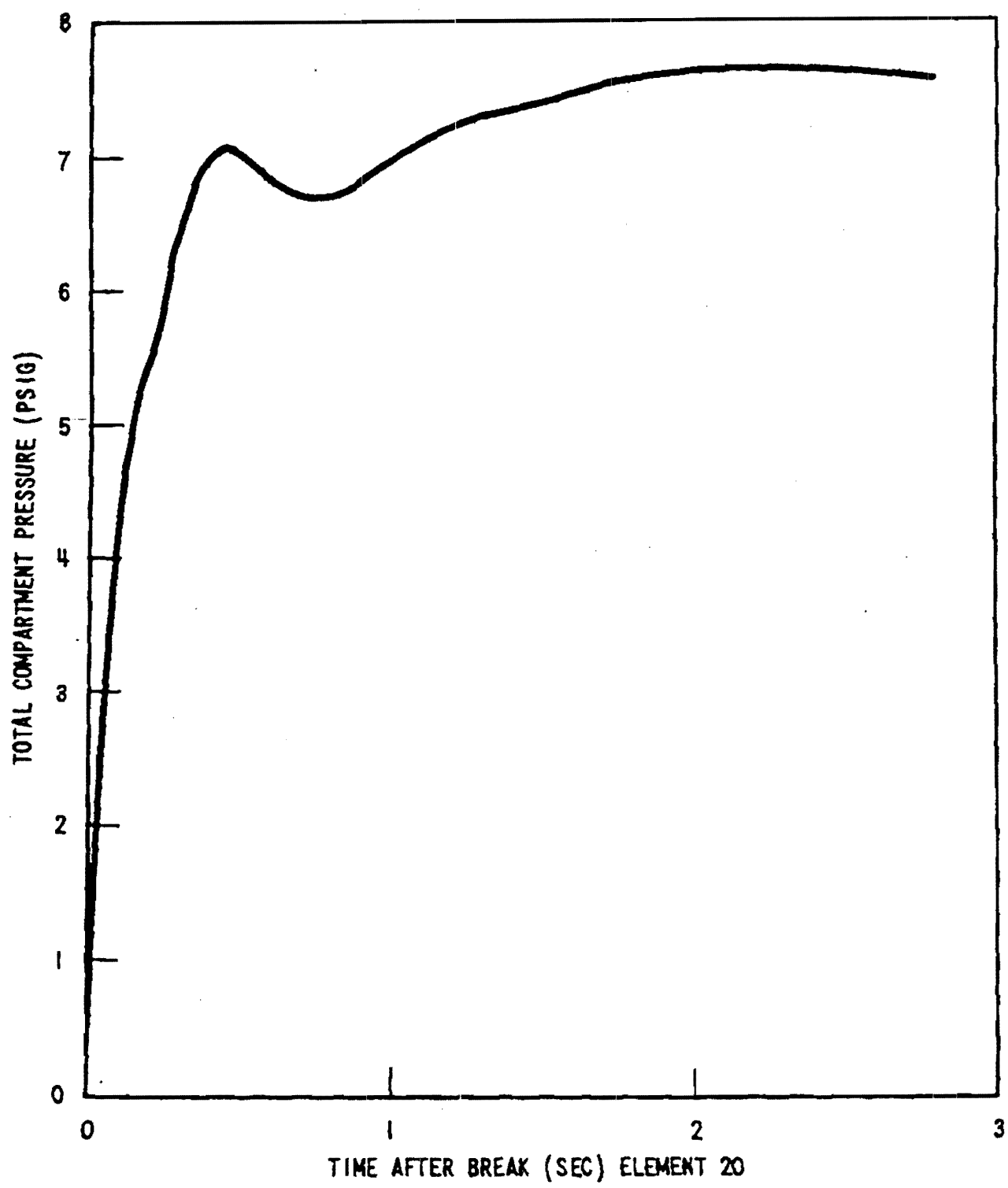

AMENDMENT 85

WATTS BAR NUCLEAR PLANT
FINAL SAFETY
ANALYSIS REPORT

127 SQUARE INCH COLD LEG BREAK
(REACTOR CAVITY ANALYSIS)
figure 6.2.1- 54

SCANNED DOCUMENT
THIS IS A SCANNED DOCUMENT MAINTAINED ON THE WBNP OPTIGRAPHICS SCANNER DATABASE

Figure 6.2.1-54 127 Square Inch Cold Leg Break (Reactor Cavity Analysis)

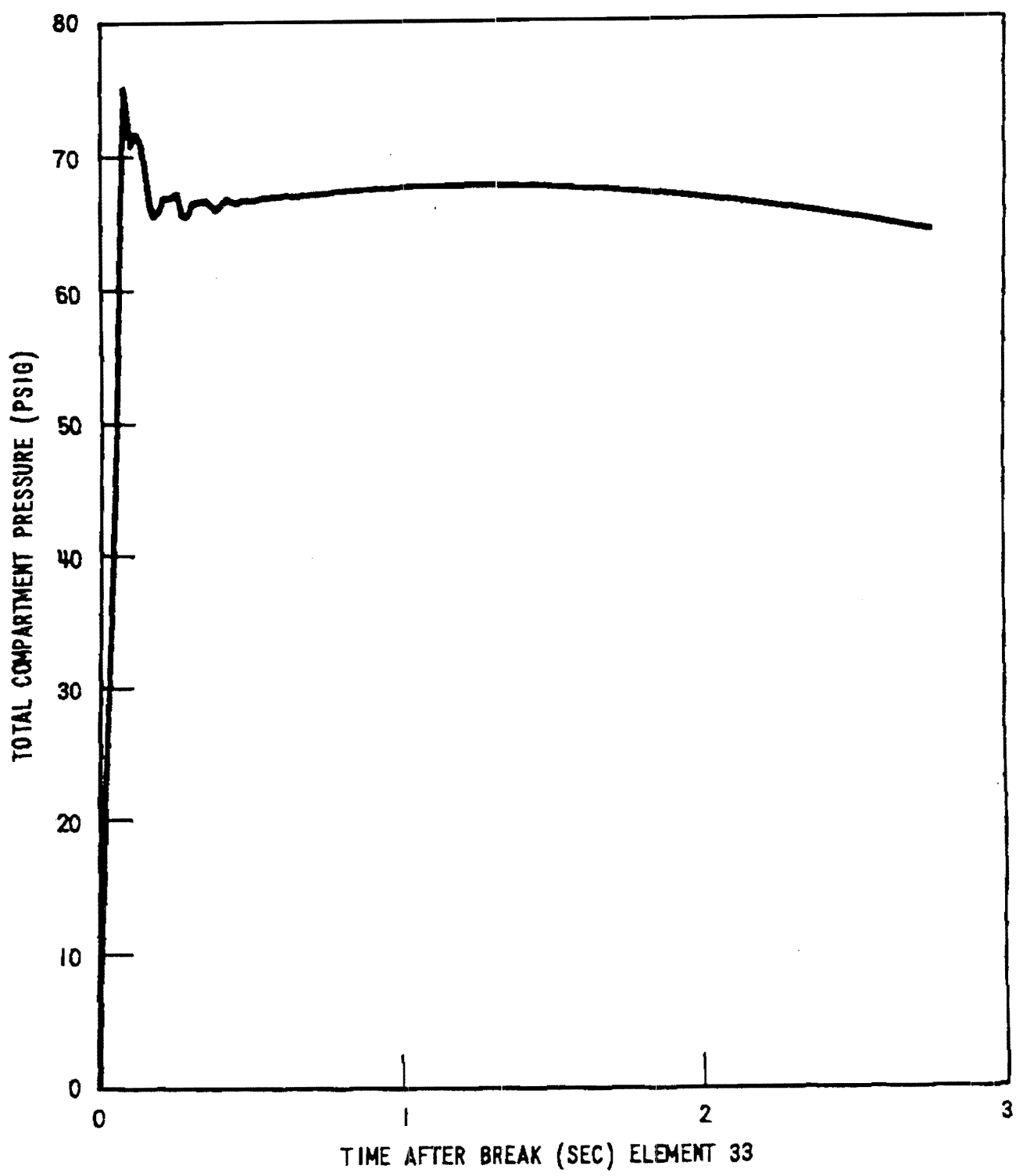

AMENDMENT 85

WATTS BAR NUCLEAR PLANT
FINAL SAFETY
ANALYSIS REPORT

1 27 SQUARE INCH COLD LEG BREAK
(REACTOR CAVITY ANALYSIS)
figure 6.2.1-55

SCANNED DOCUMENT
THIS IS A SCANNED DOCUMENT MAINTAINED ON THE WBNP OPTIGRAPHICS SCANNER DATABASE

Figure 6.2.1-55 127 Square Inch Cold Leg Break (Reactor Cavity Analysis)

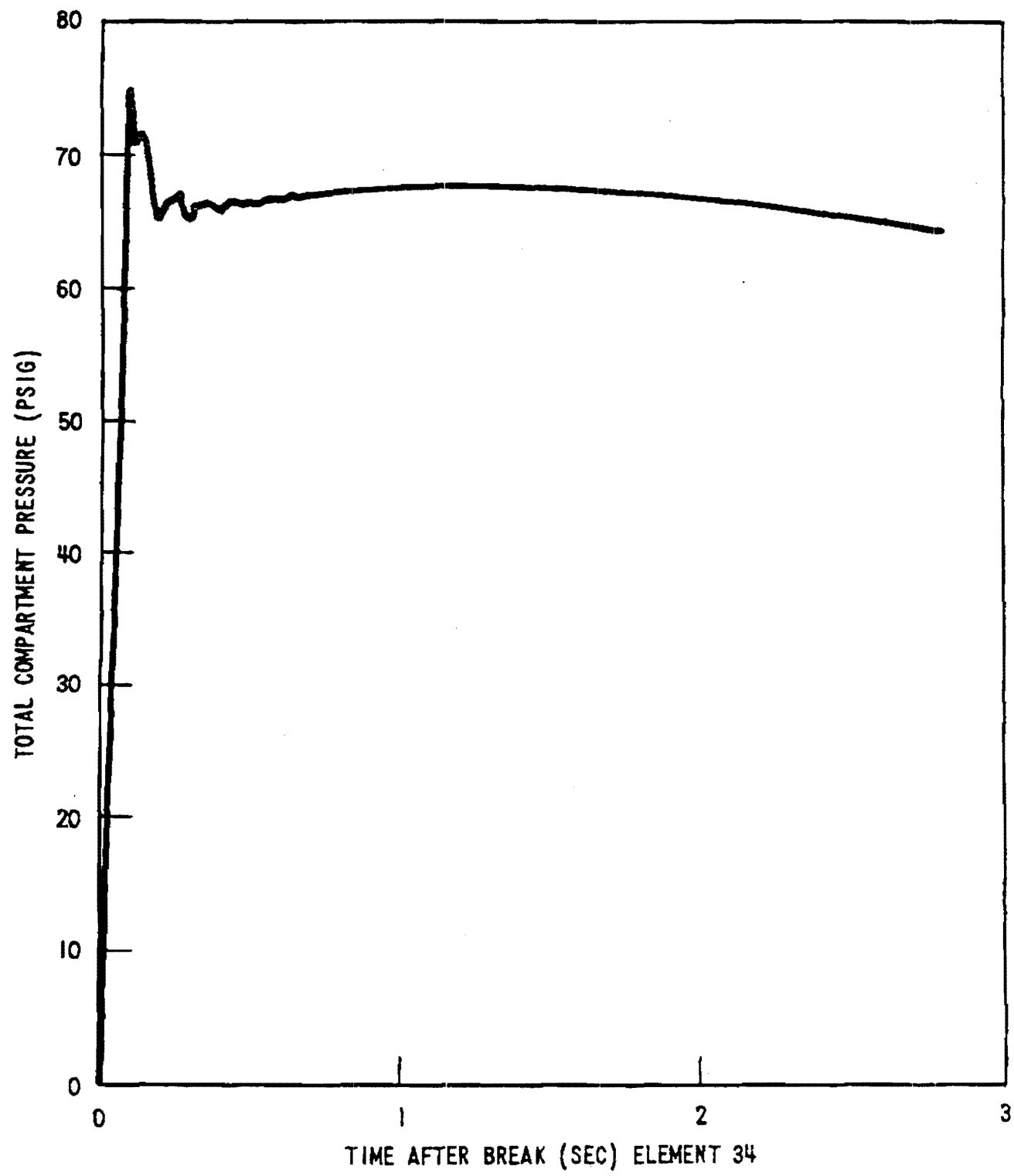

AMENDMENT 85

WATTS BAR NUCLEAR PLANT
FINAL SAFETY
ANALYSIS REPORT

127 SQUARE INCH COLD LEG BREAK
(REACTOR CAVITY ANALYSIS)
figure 6.2.1-56

SCANNED DOCUMENT
THIS IS A SCANNED DOCUMENT MAINTAINED ON THE WBNP OPTIGRAPHICS SCANNER DATABASE

Figure 6.2.1-56 127 Square Inch Cold Leg Break (Reactor Cavity Analysis)

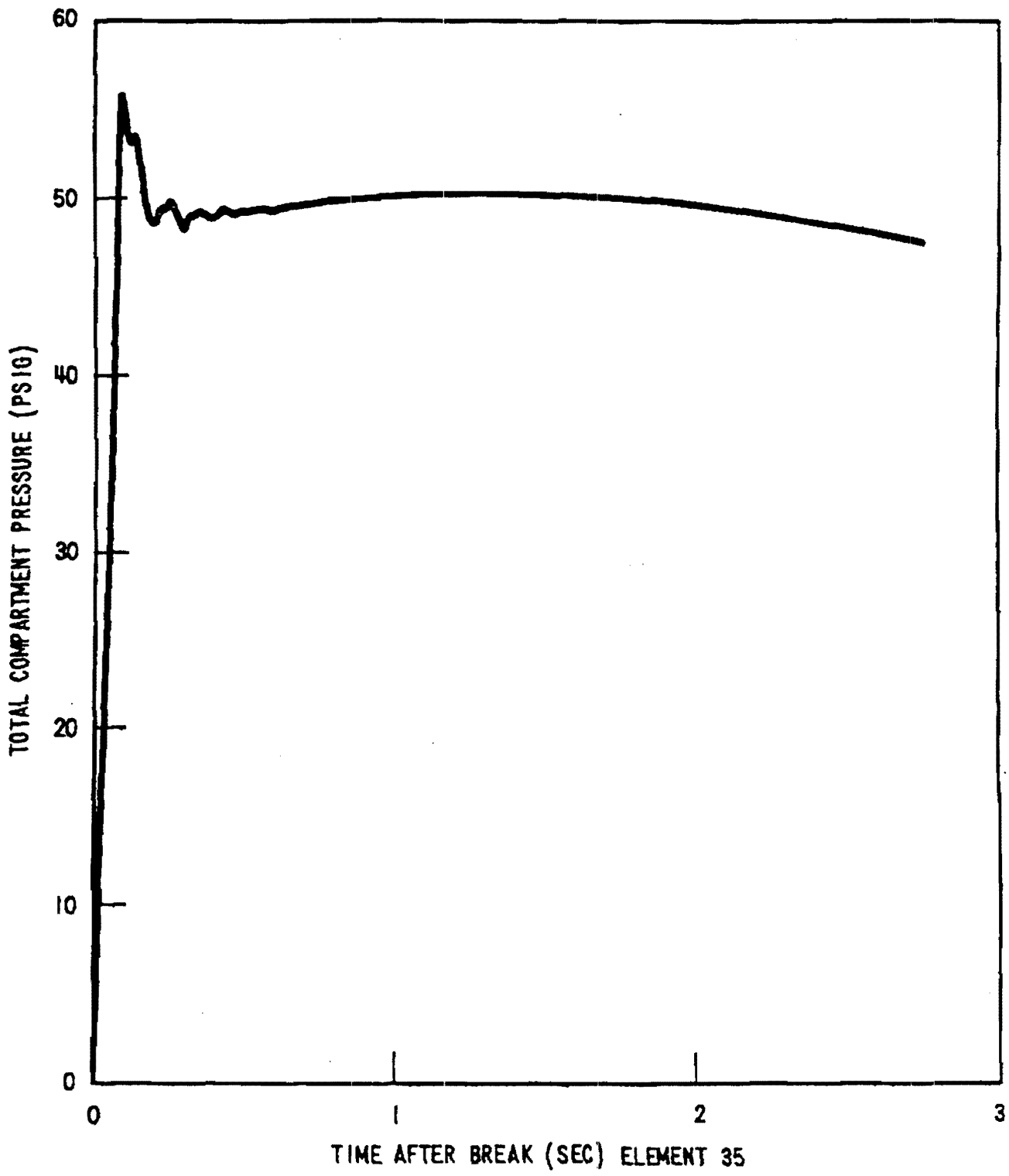

AMENDMENT 85

WATTS BAR NUCLEAR PLANT
FINAL SAFETY
ANALYSIS REPORT

127 SQUARE INCH COLD LEG BREAK
(REACTOR CAVITY ANALYSIS)
figure 6.2.1-57

SCANNED DOCUMENT
THIS IS A SCANNED DOCUMENT MAINTAINED ON THE WBNP OPTICFRAPHICS SCANNER DATABASE

Figure 6.2.1-57 127 Square Inch Cold Leg Break (Reactor Cavity Analysis)

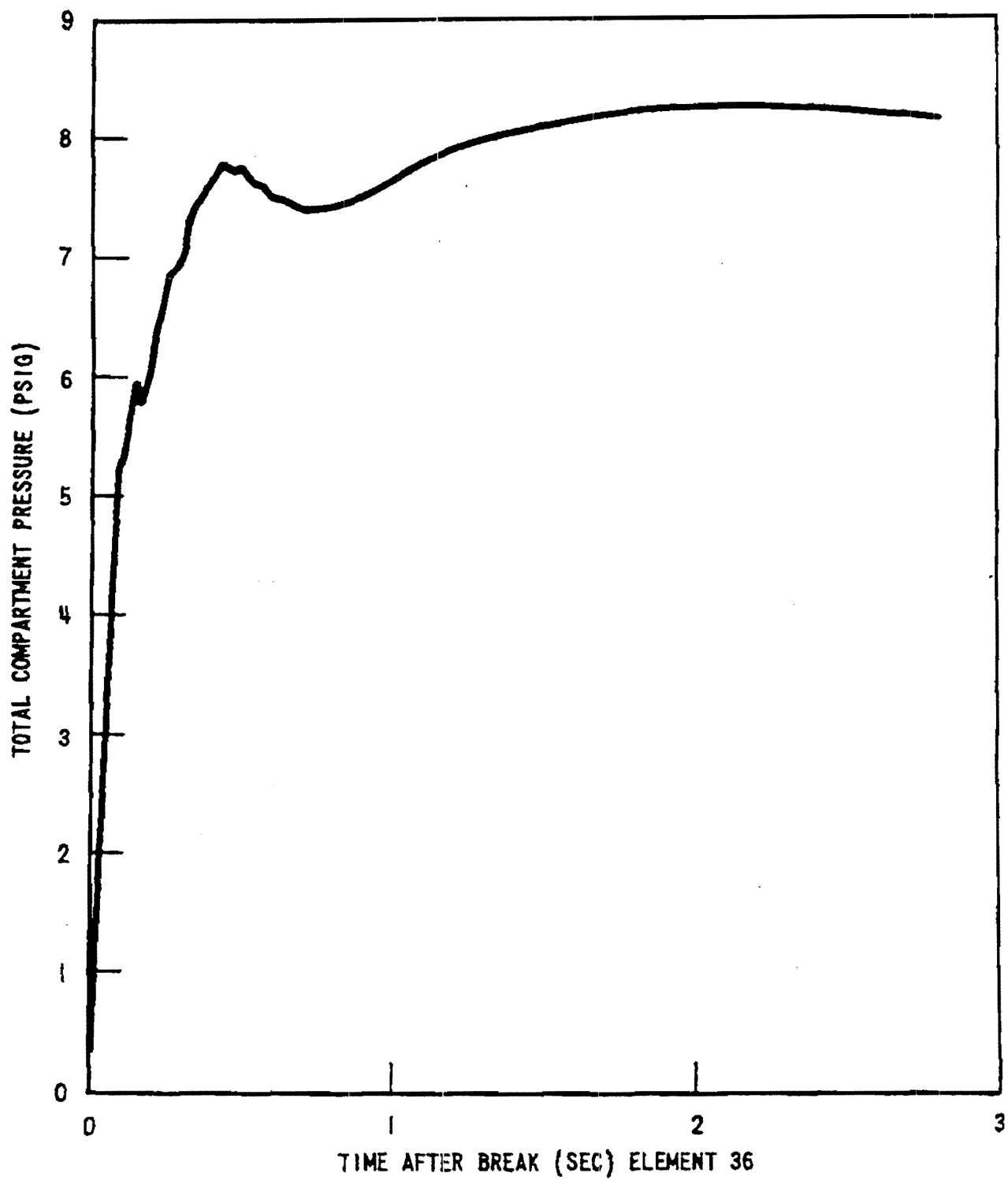

AMENDMENT 85

WATTS BAR NUCLEAR PLANT
FINAL SAFETY
ANALYSIS REPORT

1 27 SQUARE INCH COLD LEG BREAK
(REACTOR CAVITY ANALYSIS)
figure 6.2.1- 58

SCANNED DOCUMENT
THIS IS A SCANNED DOCUMENT MAINTAINED ON THE WBNP OPTIGRAPHICS SCANNER DATABASE

Figure 6.2.1-58 127 Square Inch Cold Leg Break (Reactor Cavity Analysis)

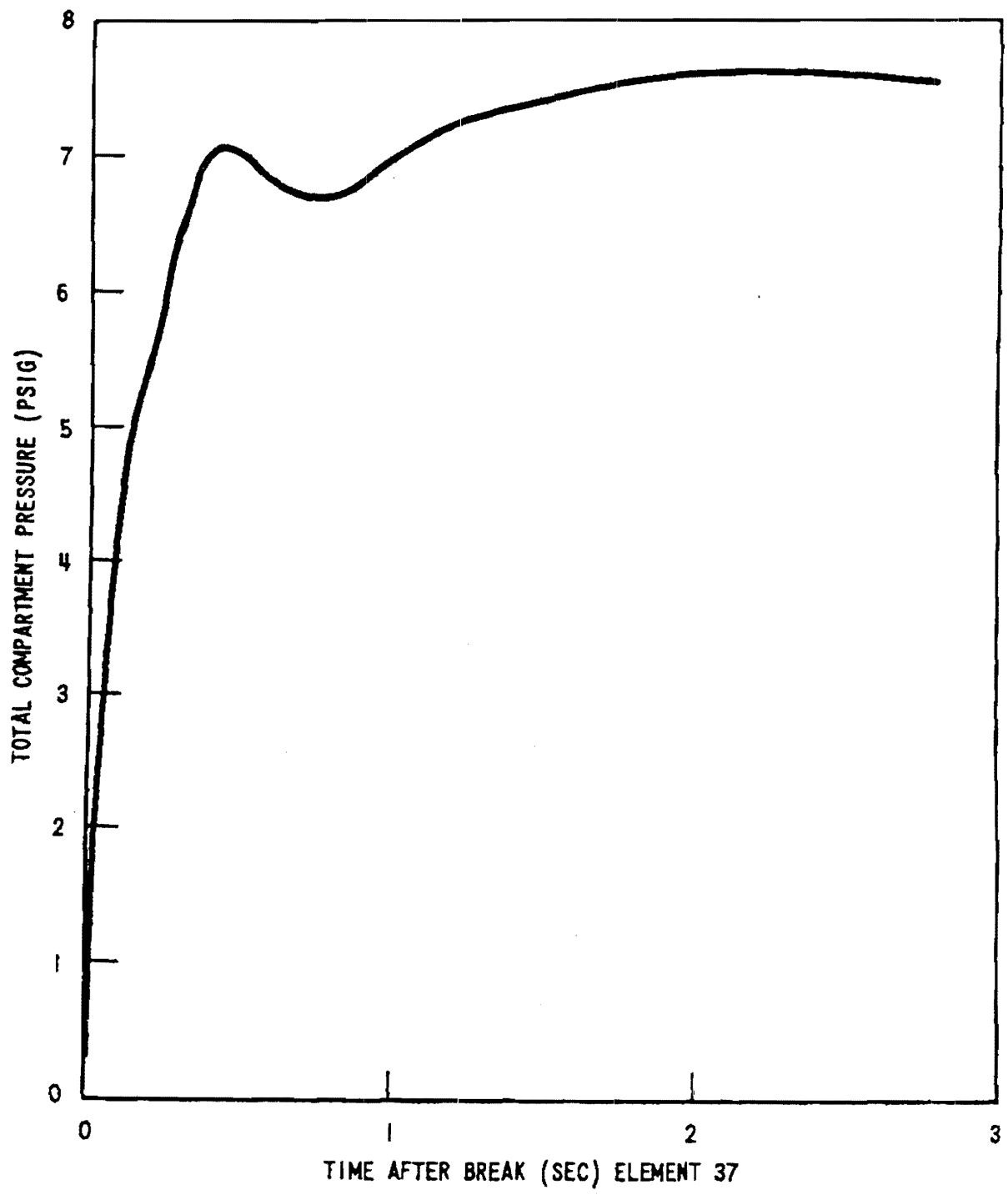

AMENDMENT 85

WATTS BAR NUCLEAR PLANT
FINAL SAFETY
ANALYSIS REPORT

127 SQUARE INCH COLD LEG BREAK
(REACTOR CAVITY ANALYSIS)
figure 6.2.1-59

SCANNED DOCUMENT
THIS IS A SCANNED DOCUMENT MAINTAINED ON THE WBNP OPTIGRAPHICS SCANNER DATABASE

Figure 6.2.1-59 127 Square Inch Cold Leg Break (Reactor Cavity Analysis)

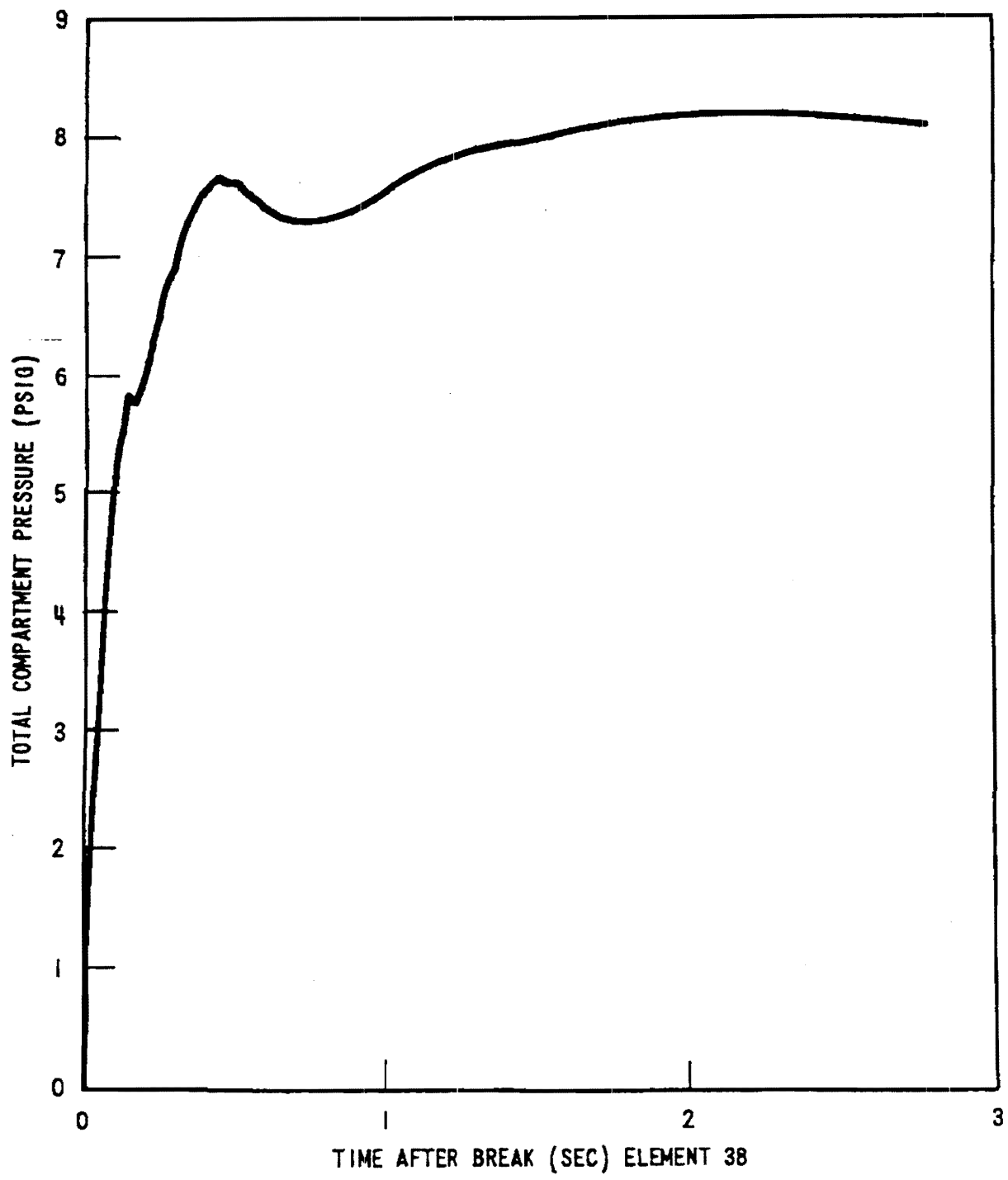

AMENDMENT 85

WATTS BAR NUCLEAR PLANT
FINAL SAFETY
ANALYSIS REPORT

1 27 SQUARE INCH COLD LEG BREAK
(REACTOR CAVITY ANALYSIS)
figure 6.2.1-60

SCANNED DOCUMENT
THIS IS A SCANNED DOCUMENT MAINTAINED ON THE WBNP OPTIGRAPHICS SCANNER DATABASE

Figure 6.2.1-60 127 Square Inch Cold Leg Break (Reactor Cavity Analysis)

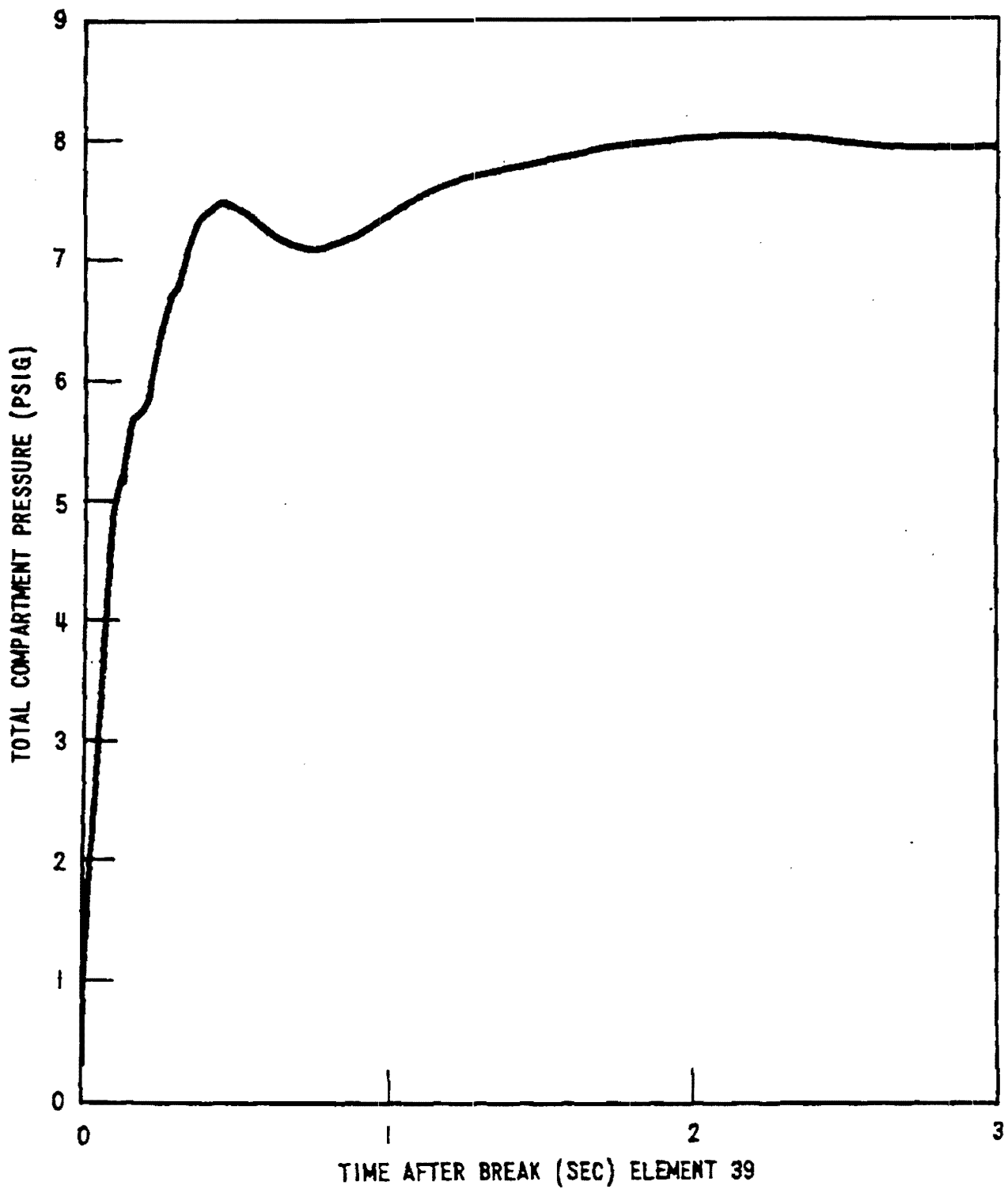

AMENDMENT 85

WATTS BAR NUCLEAR PLANT
FINAL SAFETY
ANALYSIS REPORT

1 27 SQUARE INCH COLD LEG BREAK
(REACTOR CAVITY ANALYSIS)
figure 6.2.1-61

SCANNED DOCUMENT
THIS IS A SCANNED DOCUMENT MAINTAINED ON THE WBNP OPTIGRAPHICS SCANNER DATABASE

Figure 6.2.1-61 127 Square Inch Cold Leg Break (Reactor Cavity Analysis)

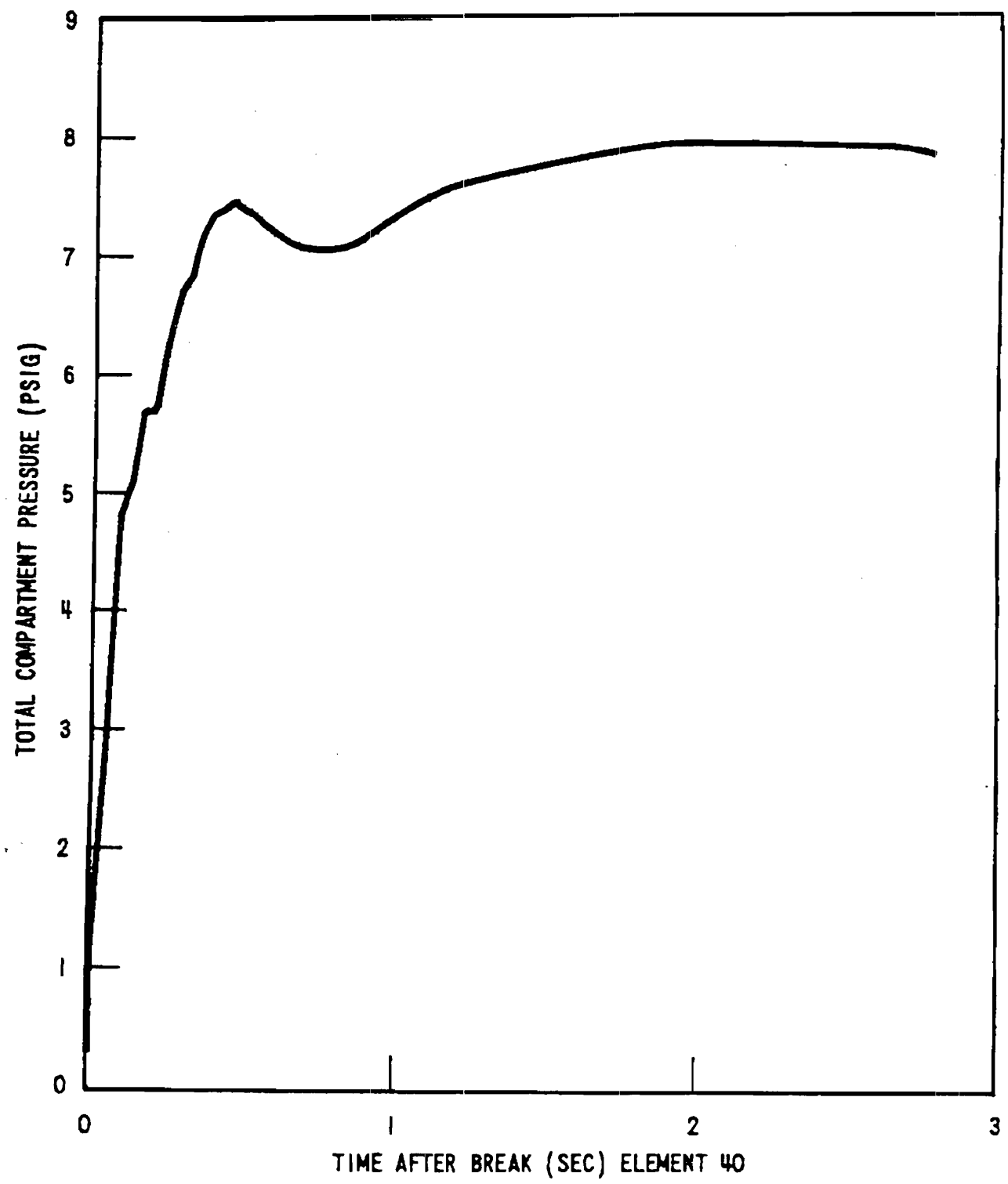

AMENDMENT 85

WATTS BAR NUCLEAR PLANT
FINAL SAFETY
ANALYSIS REPORT

127 SQUARE INCH COLD LEG BREAK
(REACTOR CAVITY ANALYSIS)
figure 6.2.1-62

SCANNED DOCUMENT
THIS IS A SCANNED DOCUMENT MAINTAINED ON
THE WBNP OPTIGRAPHICS SCANNER DATABASE

Figure 6.2.1-62 127 Square Inch Cold Leg Break (Reactor Cavity Analysis)

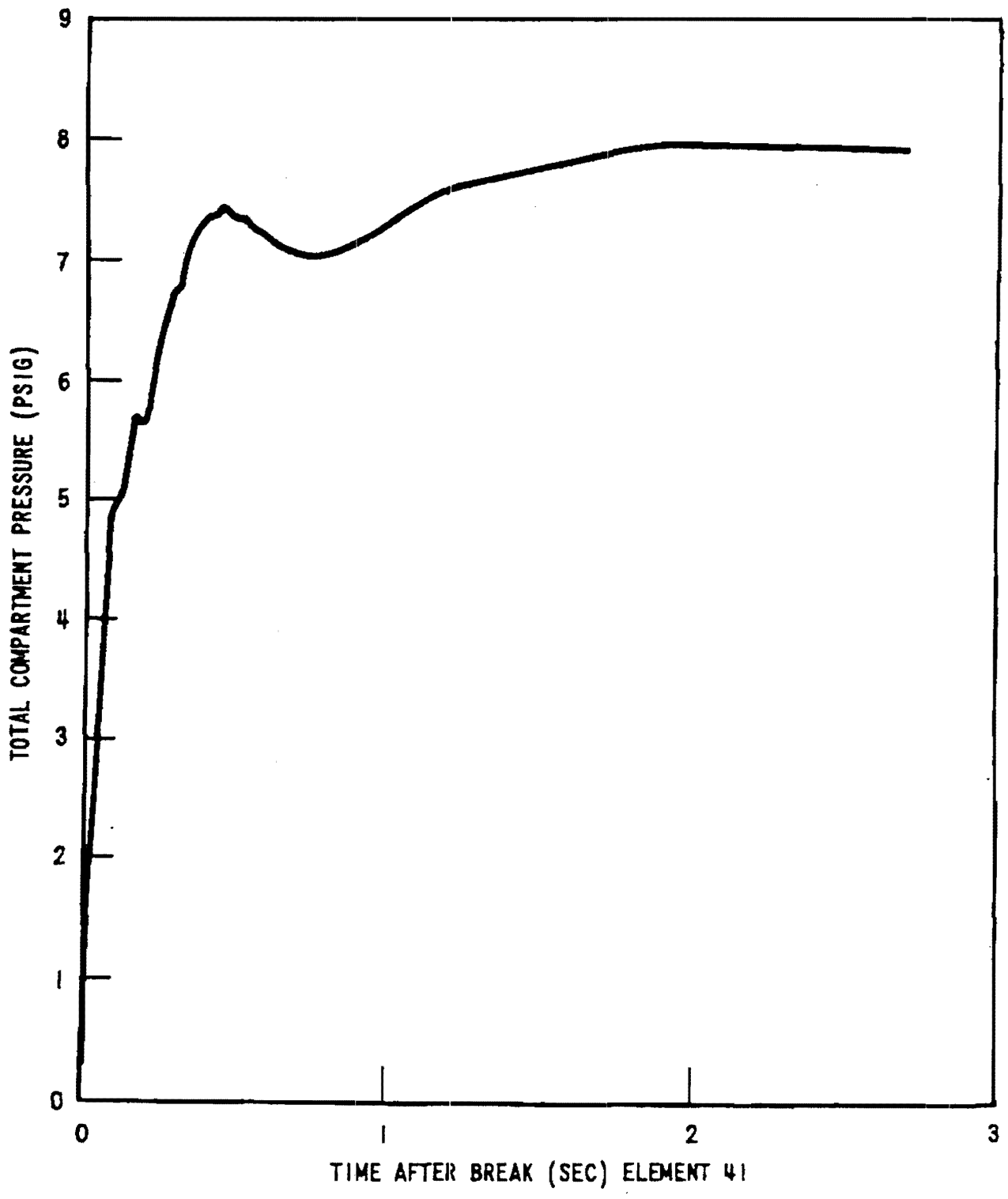

AMENDMENT 85

WATTS BAR NUCLEAR PLANT
FINAL SAFETY
ANALYSIS REPORT

127 SQUARE INCH COLD LEG BREAK
(REACTOR CAVITY ANALYSIS)
figure 6.2.1-63

SCANNED DOCUMENT
THIS IS A SCANNED DOCUMENT MAINTAINED ON
THE WBNP OPTIGRAPHICS SCANNER DATABASE

Figure 6.2.1-63 127 Square Inch Cold Leg Break (Reactor Cavity Analysis)

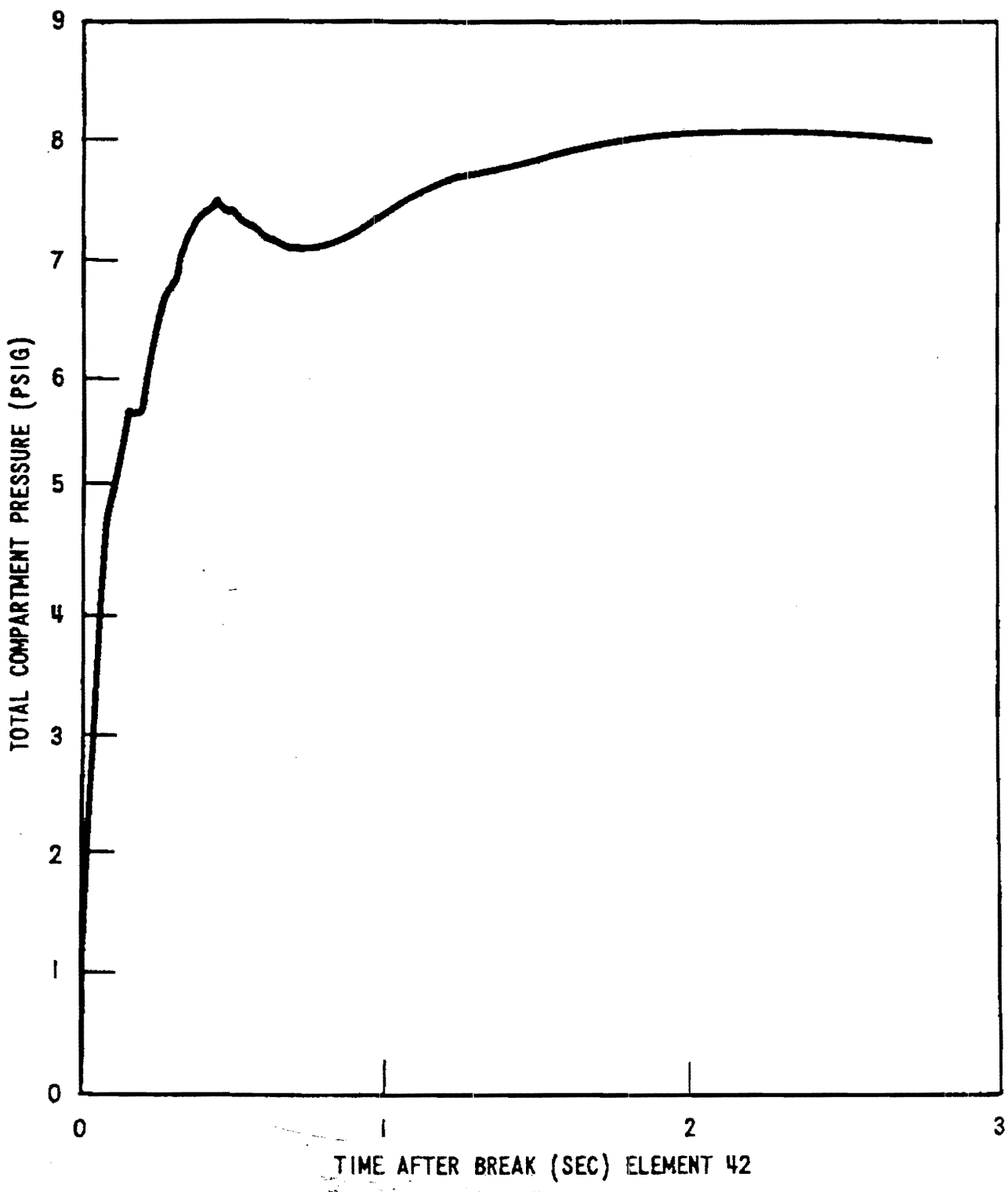

AMENDMENT 85

WATTS BAR NUCLEAR PLANT
FINAL SAFETY
ANALYSIS REPORT

127 SQUARE INCH COLD LEG BREAK
(REACTOR CAVITY ANALYSIS)
figure 6.2.1-64

SCANNED DOCUMENT
THIS IS A SCANNED DOCUMENT MAINTAINED ON THE WBNP OPTIGRAPHICS SCANNER DATABASE

Figure 6.2.1-64 127 Square Inch Cold Leg Break (Reactor Cavity Analysis)

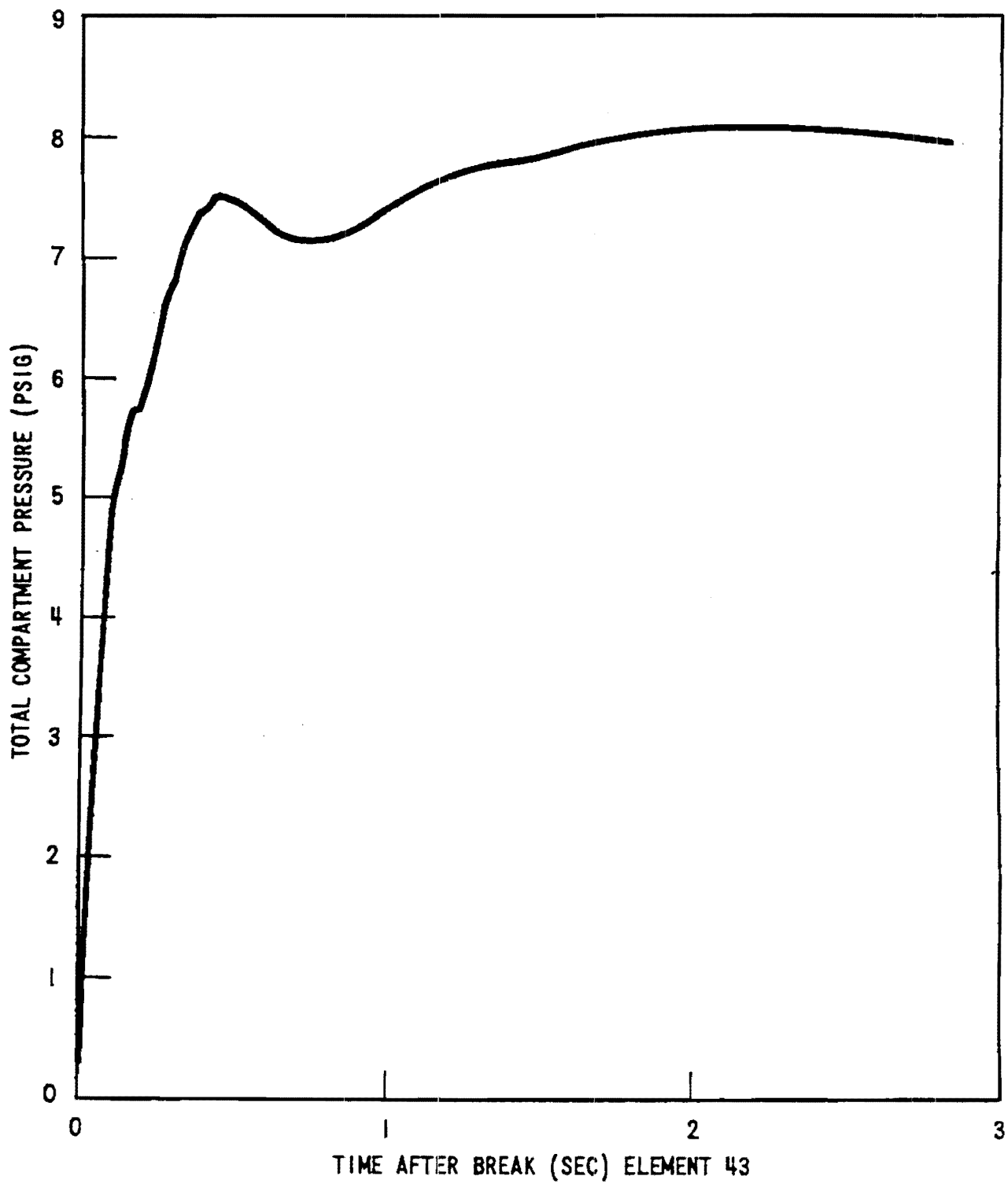

AMENDMENT 85

WATTS BAR NUCLEAR PLANT
FINAL SAFETY
ANALYSIS REPORT

127 SQUARE INCH COLD LEG BREAK
(REACTOR CAVITY ANALYSIS)
figure 6.2.1-65

SCANNED DOCUMENT
THIS IS A SCANNED DOCUMENT MAINTAINED ON THE WBNP OPTIGRAPHICS SCANNER DATABASE

Figure 6.2.1-65 127 Square Inch Cold Leg Break (Reactor Cavity Analysis)

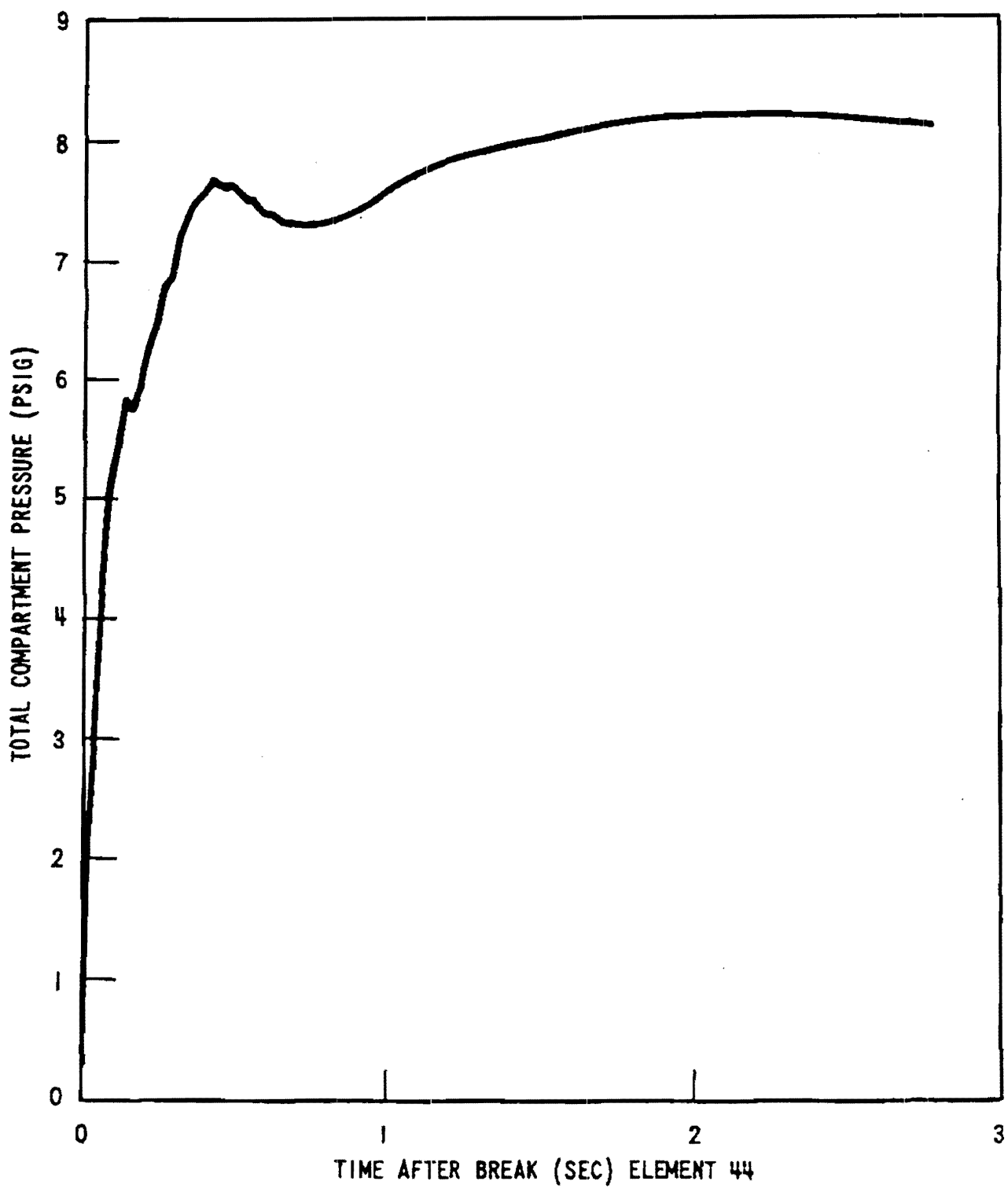

AMENDMENT 85

WATTS BAR NUCLEAR PLANT
FINAL SAFETY
ANALYSIS REPORT

127 SQUARE INCH COLD LEG BREAK
(REACTOR CAVITY ANALYSIS)
figure 6.2.1- 66

SCANNED DOCUMENT
THIS IS A SCANNED DOCUMENT MAINTAINED ON THE WBNP OPTIGRAPHICS SCANNER DATABASE

Figure 6.2.1-66 127 Square Inch Cold Leg Break (Reactor Cavity Analysis)

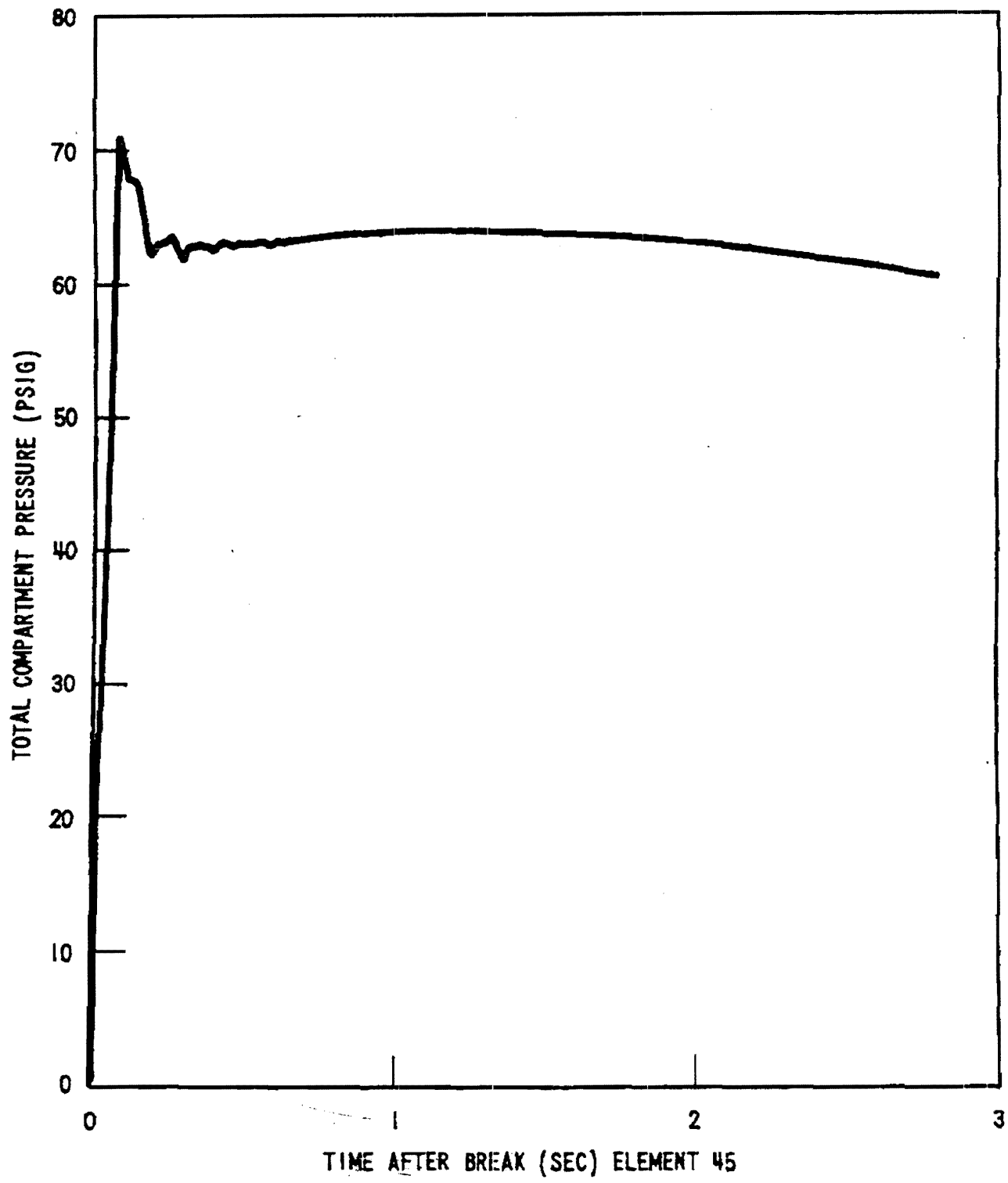

AMENDMENT 85

WATTS BAR NUCLEAR PLANT
FINAL SAFETY
ANALYSIS REPORT

127 SQUARE INCH COLD LEG BREAK
(REACTOR CAVITY ANALYSIS)
figure 6.2.1-67

SCANNED DOCUMENT
THIS IS A SCANNED DOCUMENT MAINTAINED ON THE WBNP OPTIGRAPHICS SCANNER DATABASE

Figure 6.2.1-67 127 Square Inch Cold Leg Break (Reactor Cavity Analysis)

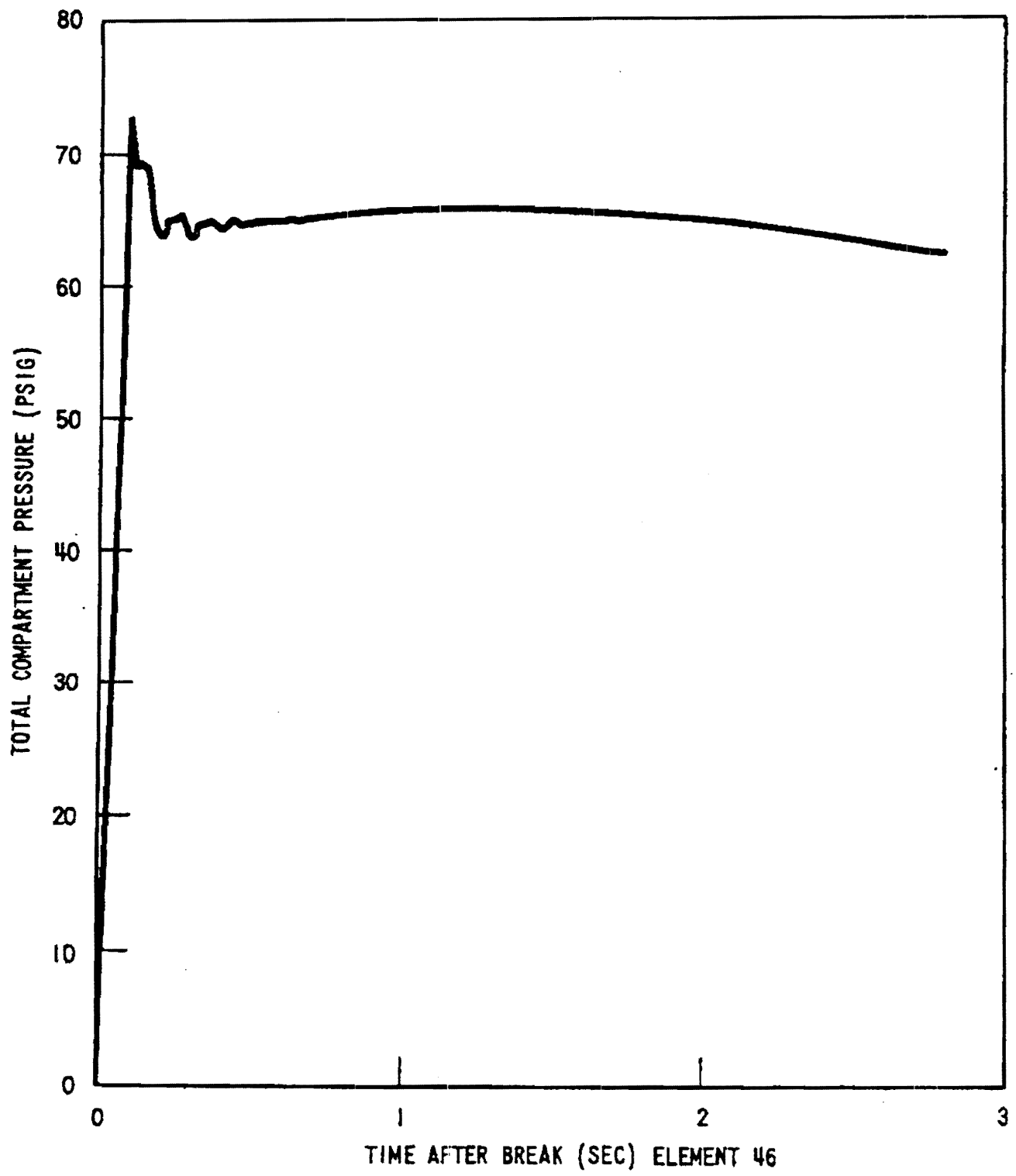

AMENDMENT 85

WATTS BAR NUCLEAR PLANT
FINAL SAFETY
ANALYSIS REPORT

127 SQUARE INCH COLD LEG BREAK
(REACTOR CAVITY ANALYSIS)
figure 6.2.1-68

SCANNED DOCUMENT
THIS IS A SCANNED DOCUMENT MAINTAINED ON THE WBNP OPTIGRAPHICS SCANNER DATABASE

Figure 6.2.1-68 127 Square Inch Cold Leg Break (Reactor Cavity Analysis)

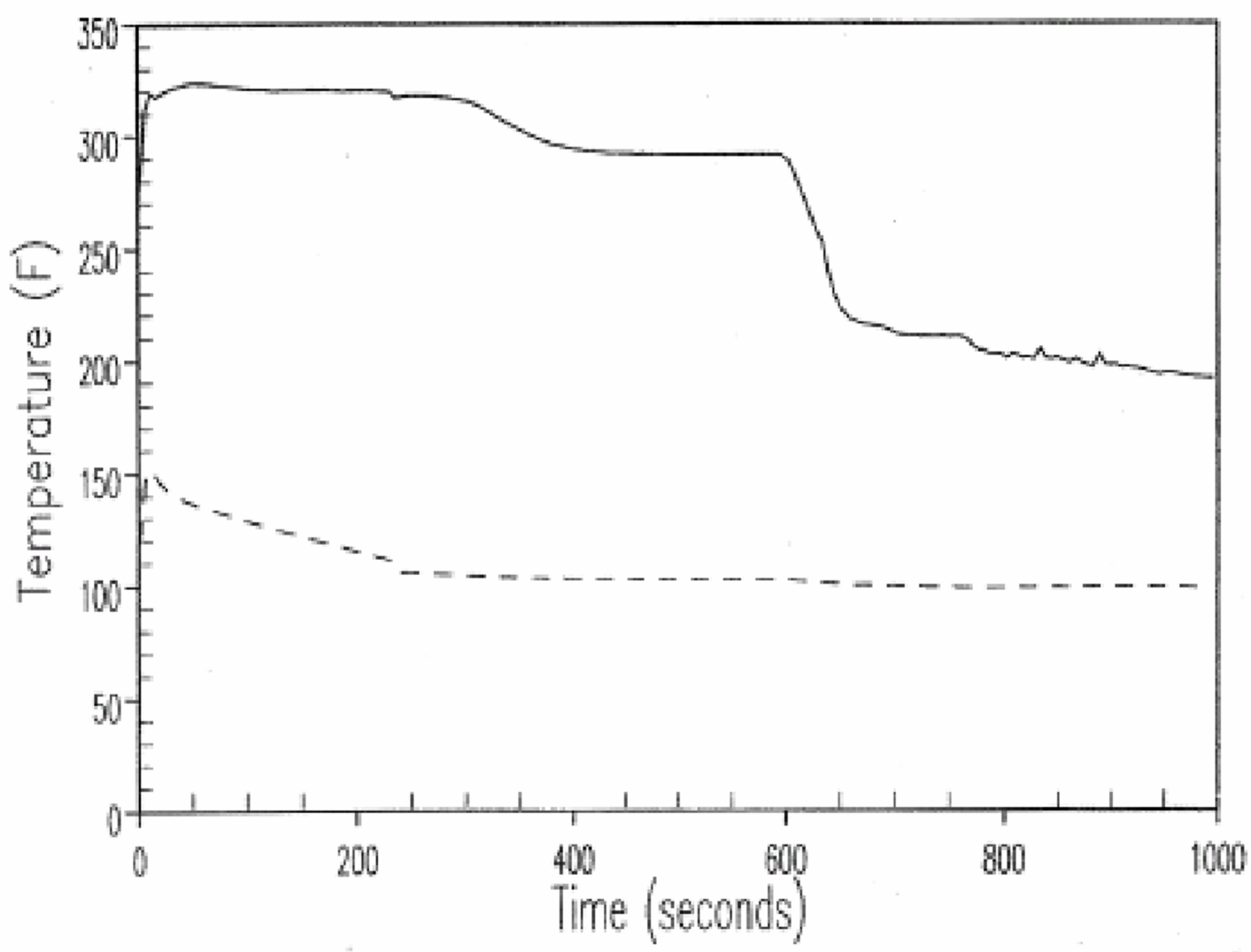

Figure 6.2.1-69 Compartment Temperature 1.4 ft^2/Loop, 100.6% Power AFW Runout Protection Failure

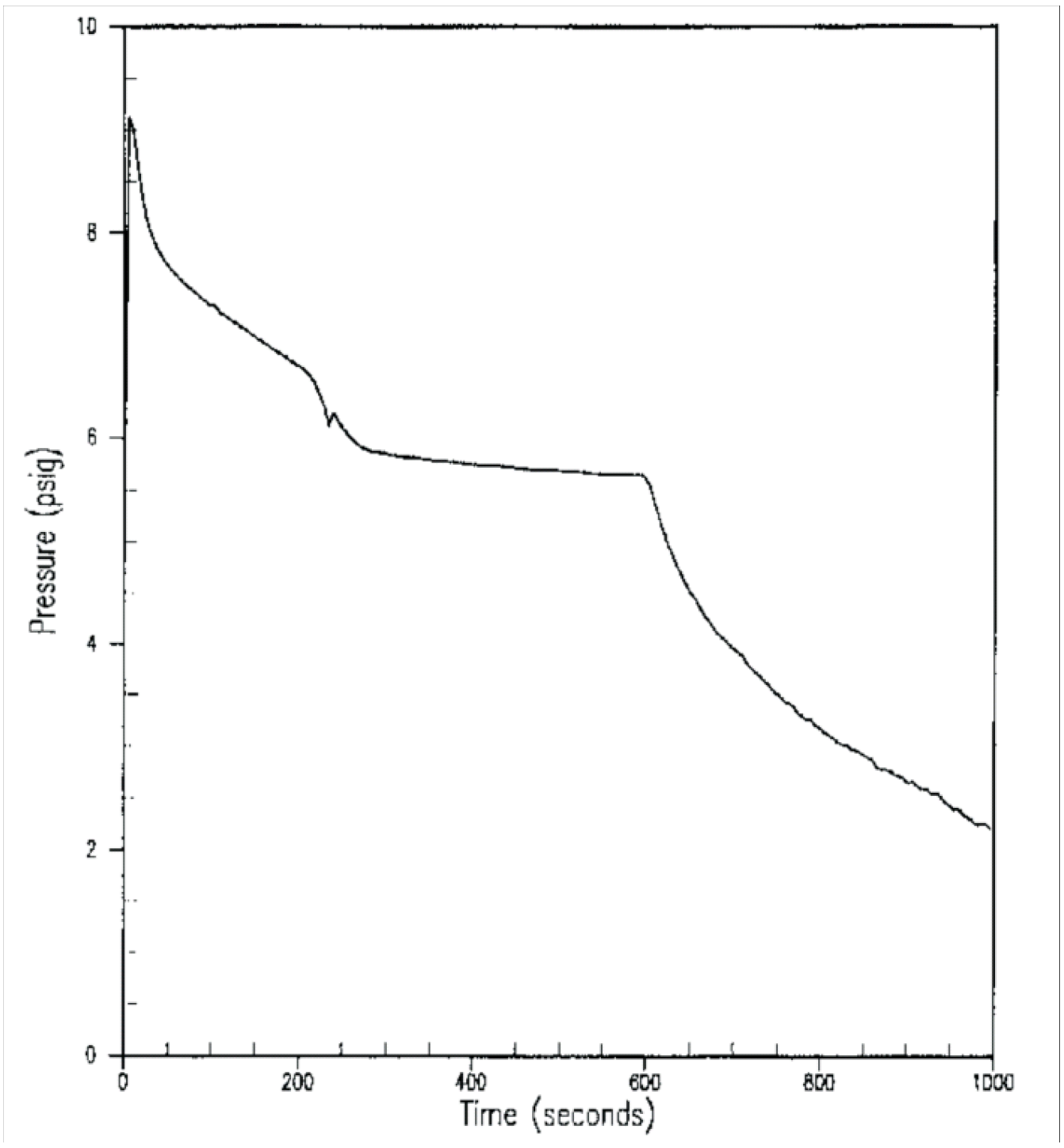

Figure 6.2.1-70 Lower Compartment Pressure 1.4 ft^2 Loop, 100.6% Power AFW Runout Protection Failure

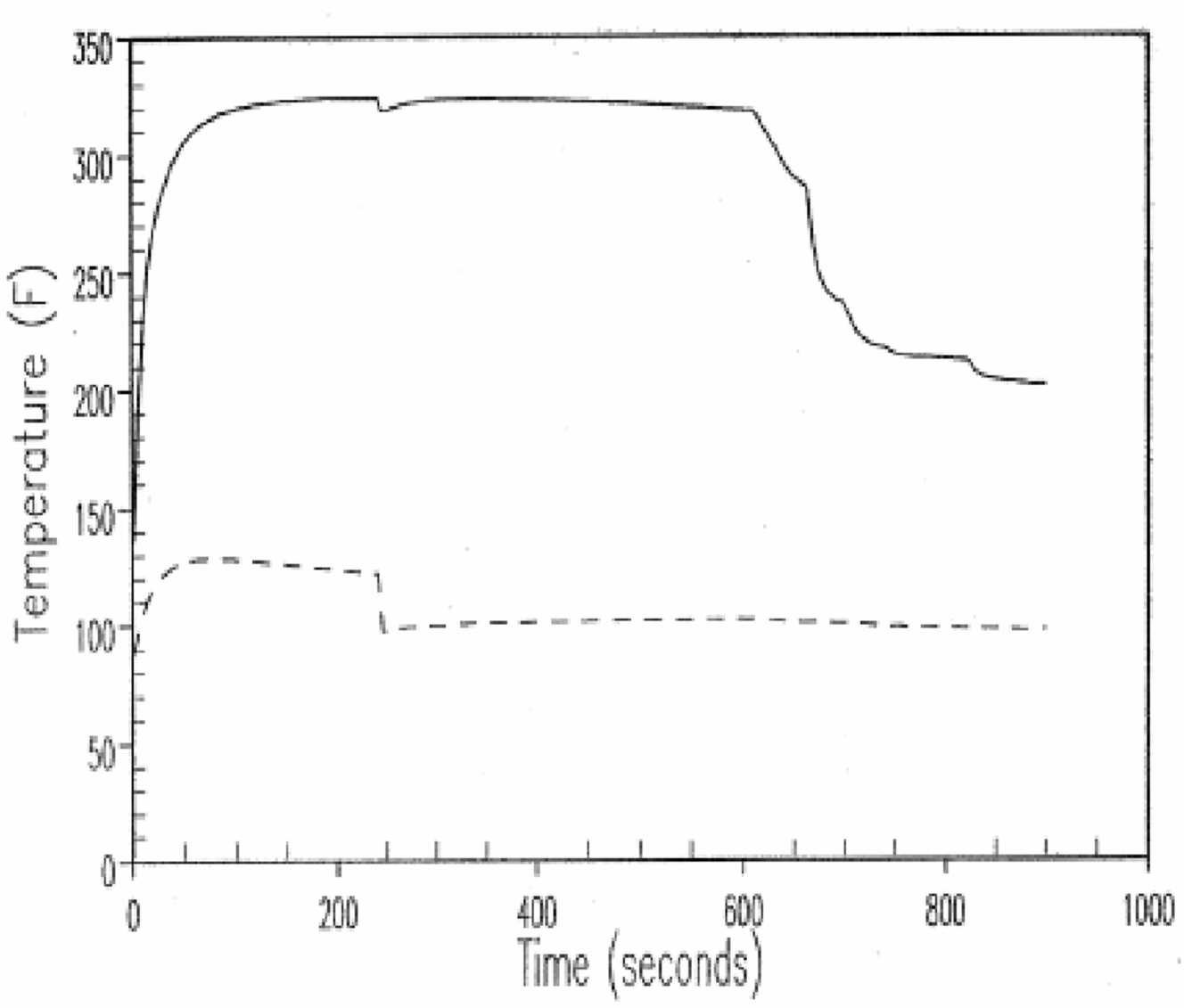

Figure 6.2.1-71 Compartment Temperature 0.35 ft^2 Split, 30% Power AFW Runout Protection Failure

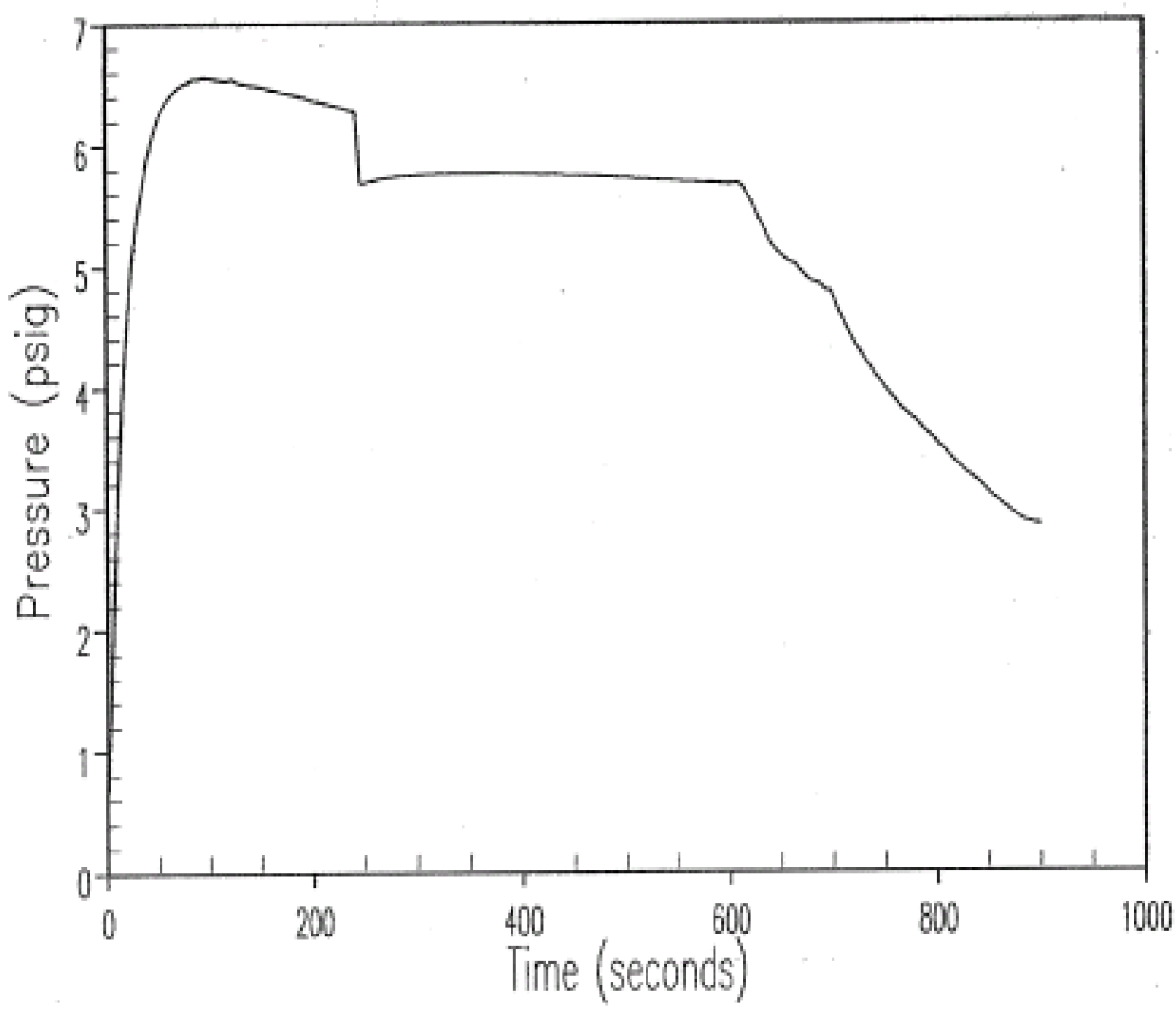

Figure 6.2.1-72 Lower Compartment Pressure 0.35 ft^2 Split, 30% Power AFW Runout Protection Failure

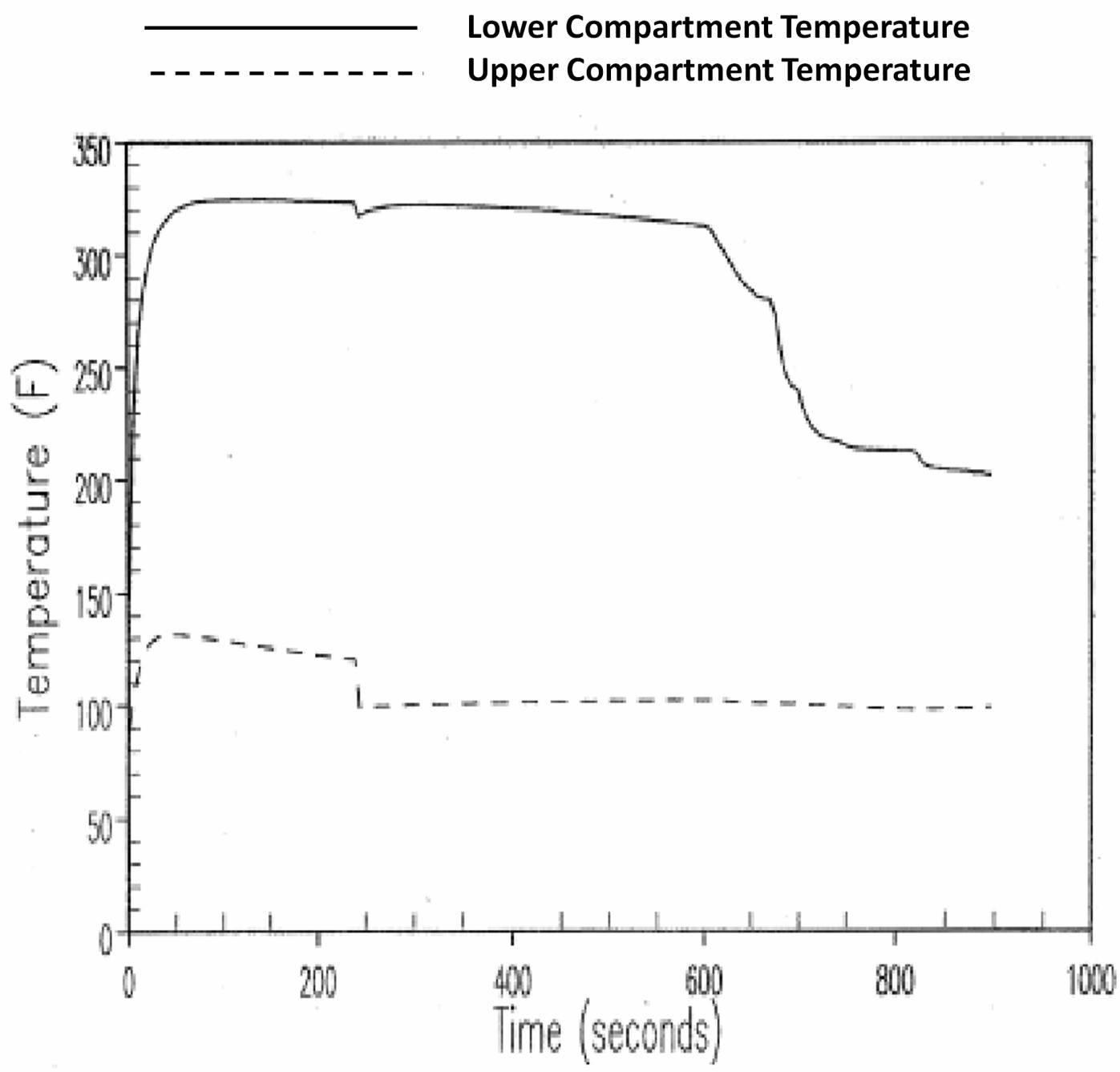

Figure 6.2.1-73 Compartment Temperature 0.6 ft^2 Split, 30% Power AFW Runout Protection Failure

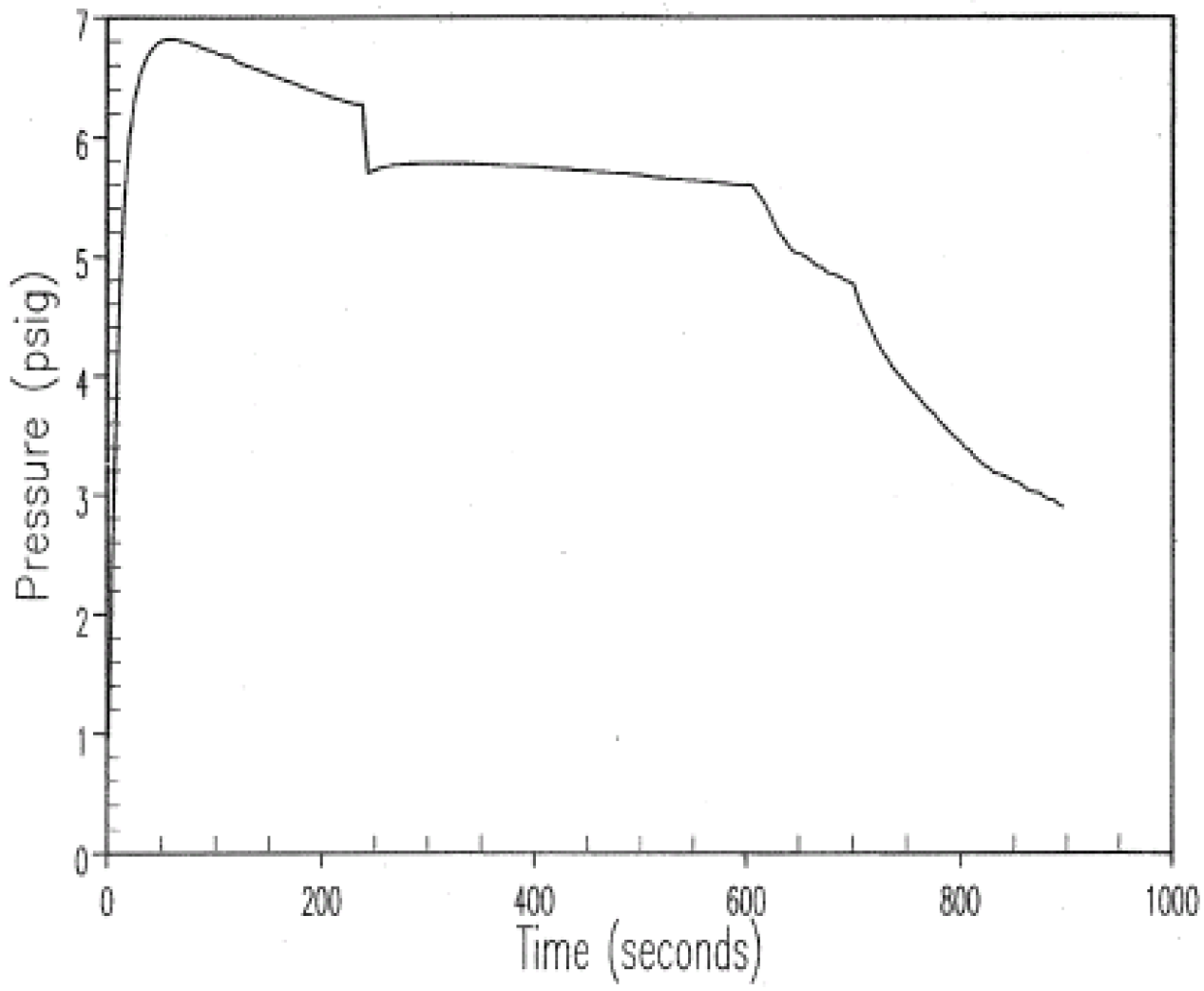

Figure 6.2.1-74 Lower Compartment Pressure 0.6 ft^2 Split, 30% Power AFW Runout Protection Failure

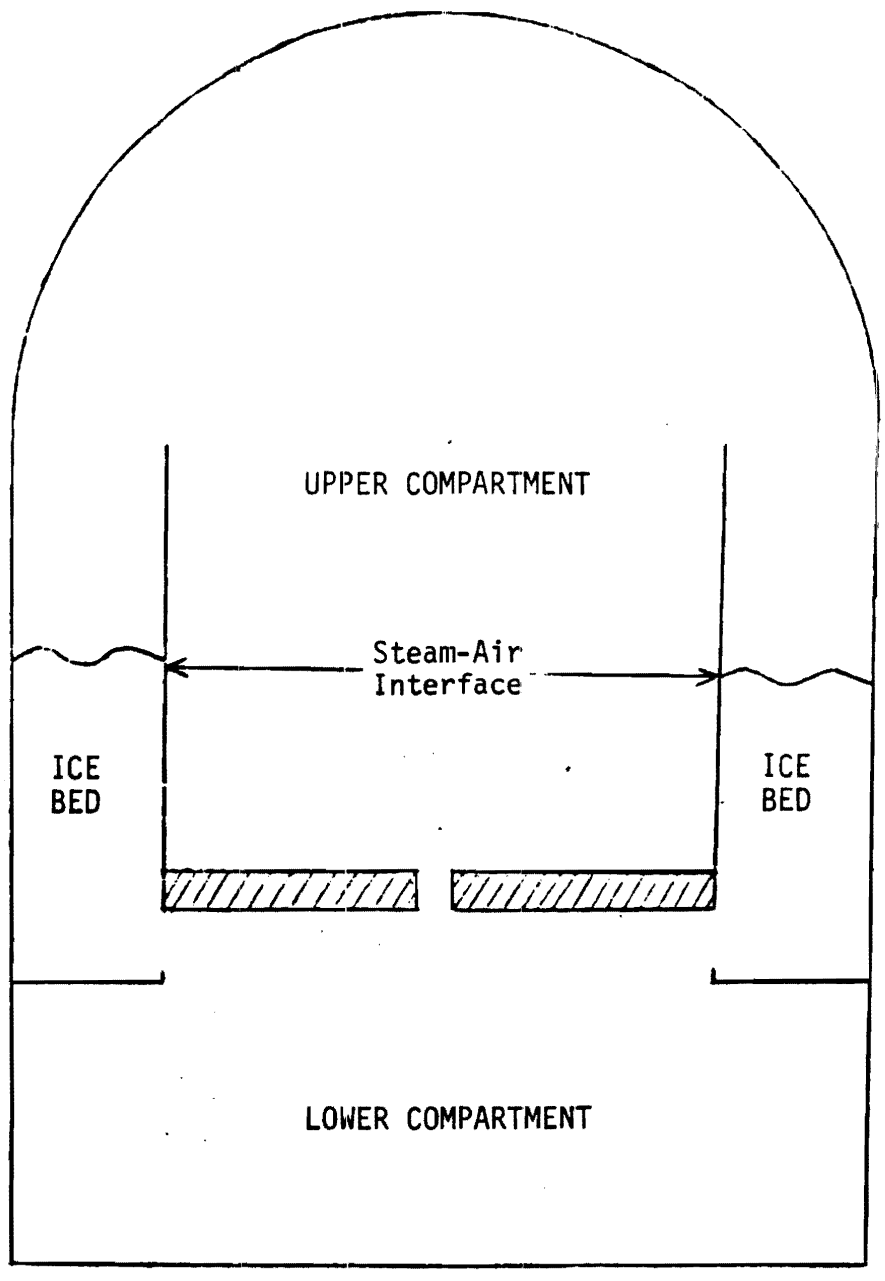

Figure 6.2.1-75 Maximum Reverse Pressure Differential Model

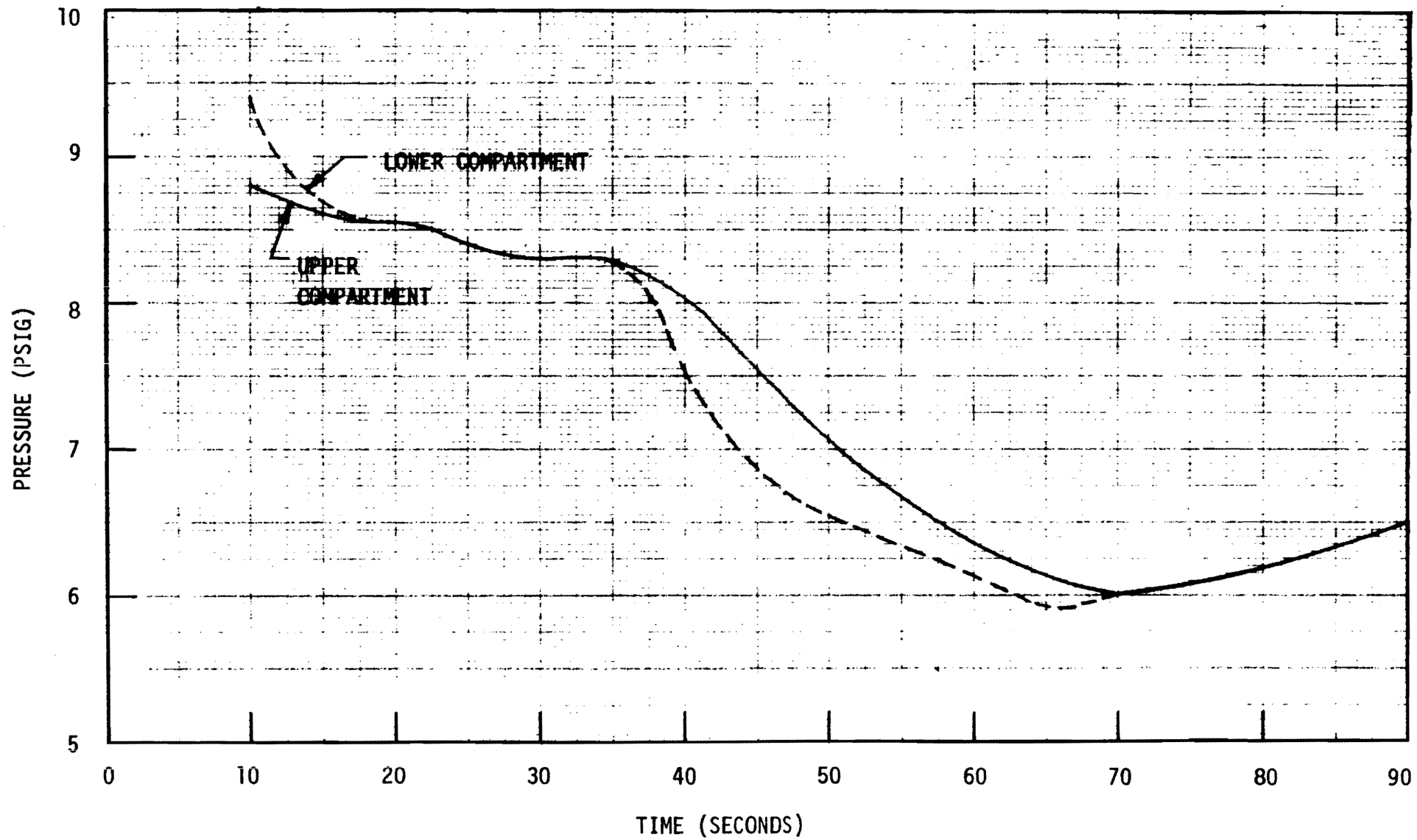

Figure 6.2.1-76 Maximum Reverse Pressure Differential Upper and Lower Compartment Pressures

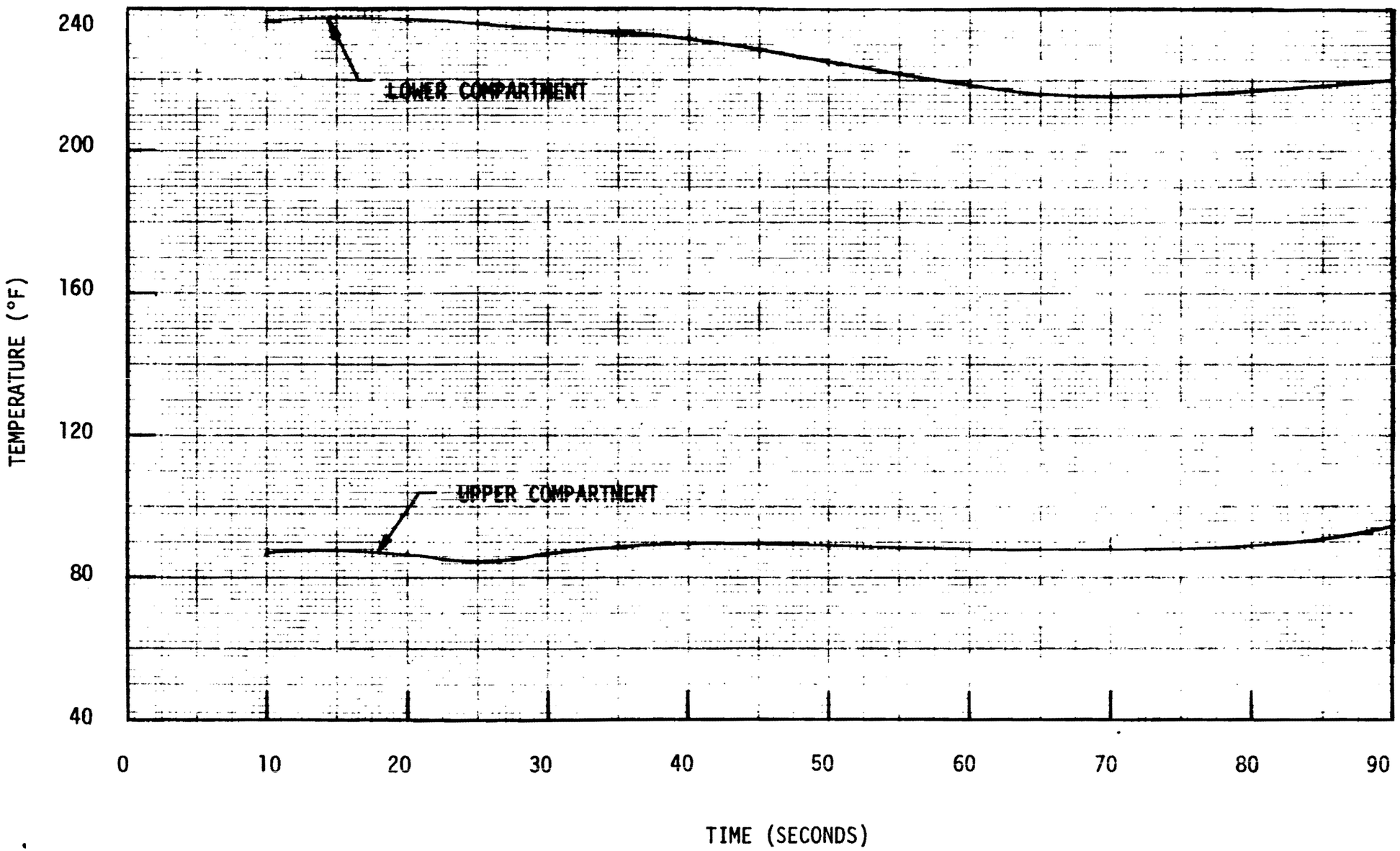

Figure 6.2.1-77

Figure 6.2.1-77 Maximum Reverse Pressure Differential Upper and Lower Compartment Temperatures

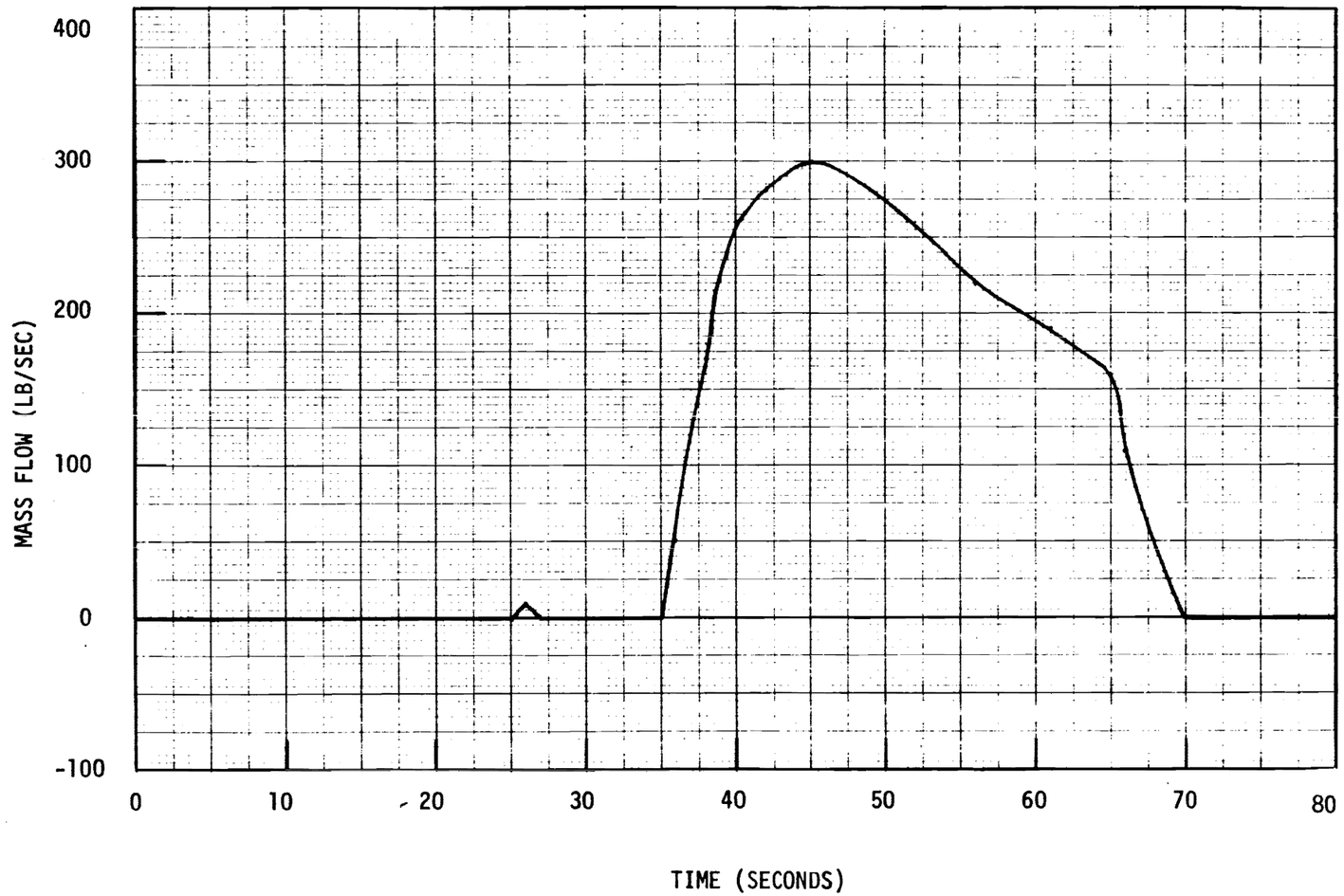

Figure 6.2.1-78

Figure 6.2.1-78 Maximum Reverse Pressure Differential Upper to Lower Compartment Flowrates

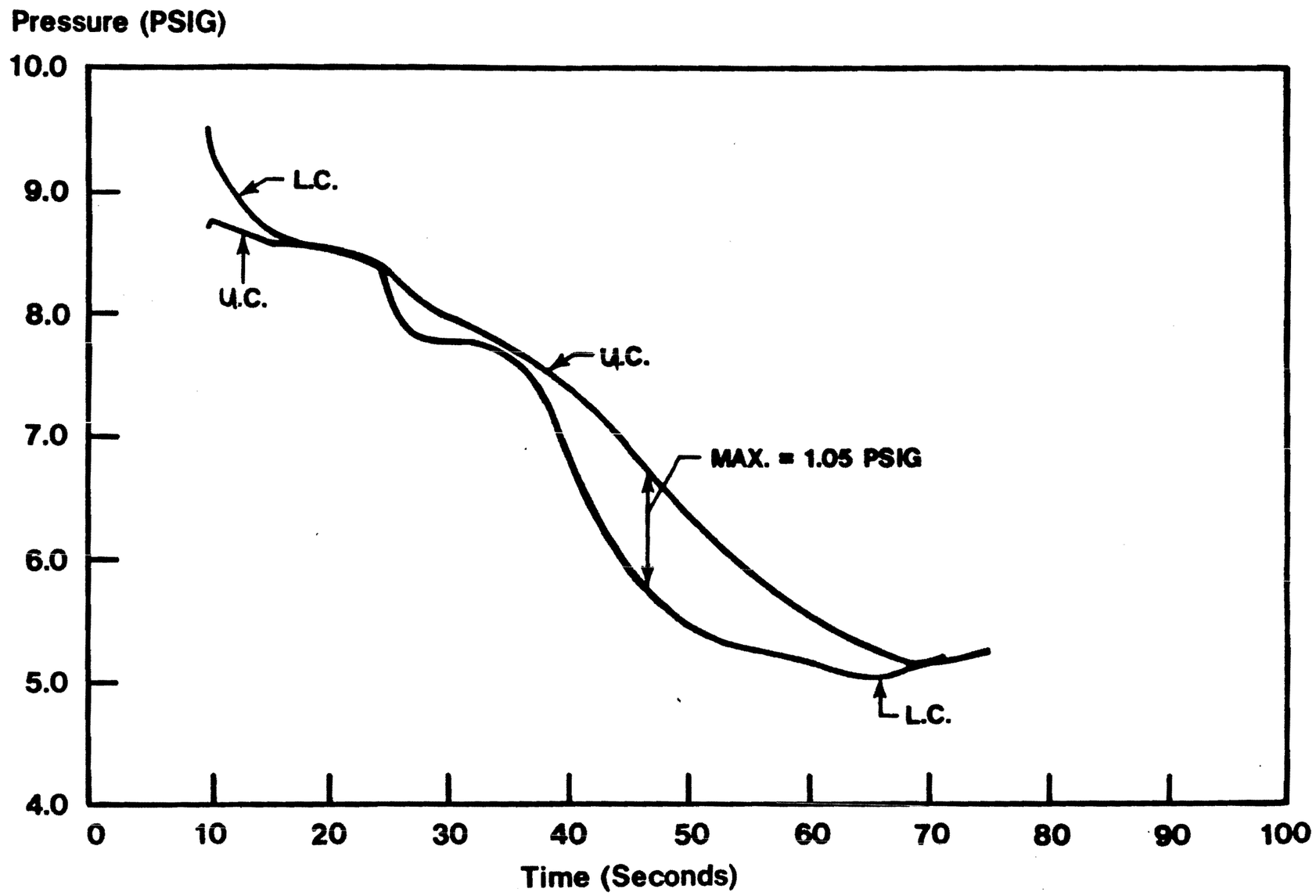

Figure 6.2.1-79

Figure 6.2.1-79 Maximum Reverse Pressure Differential Case 6 Upper and Lower Compartment Pressures

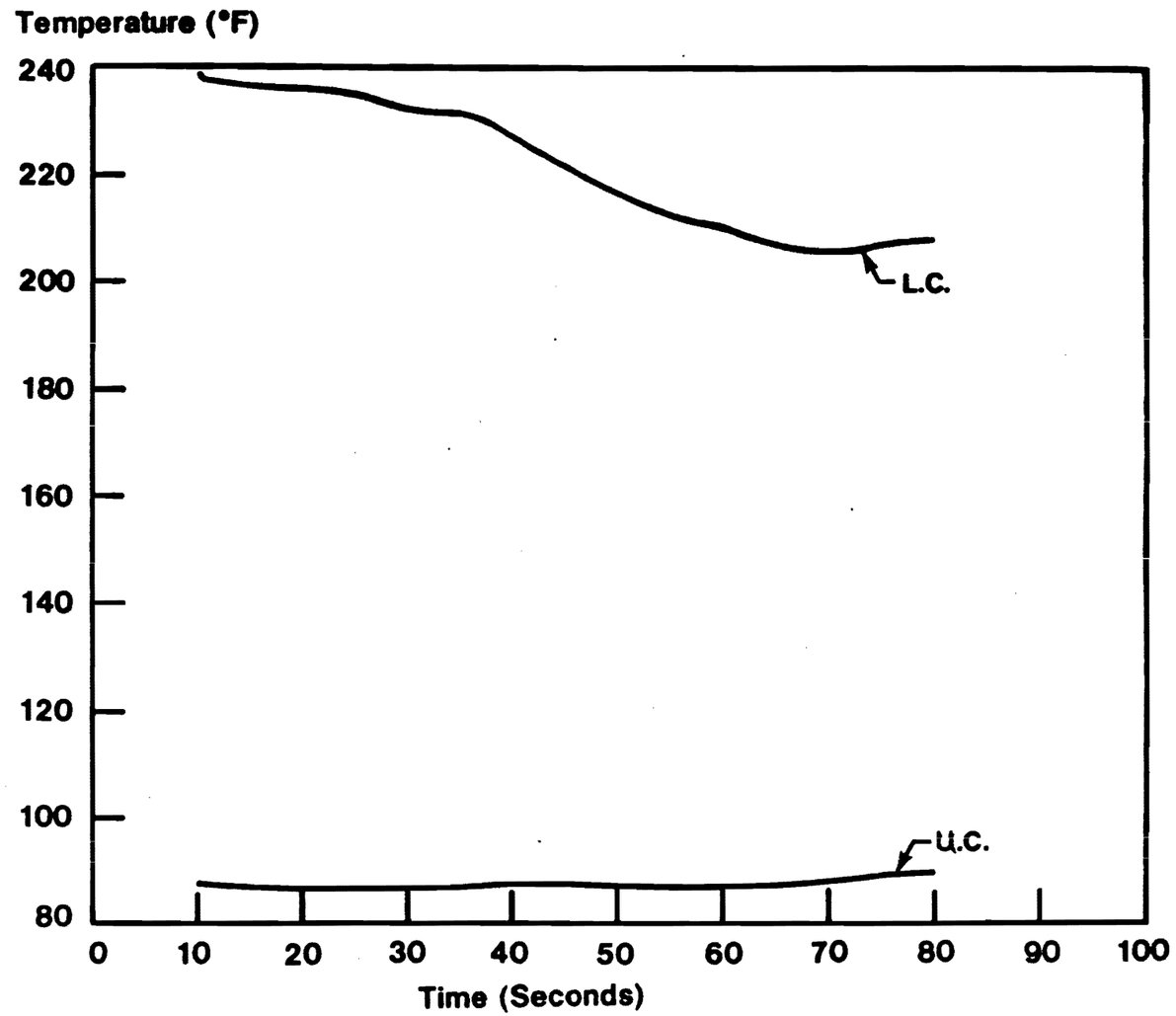

FIGURE 6.2.1-80

Figure 6.2.1-80 Maximum Reverse Pressure Differential Case 6 Upper and Lower Compartment Temperatures

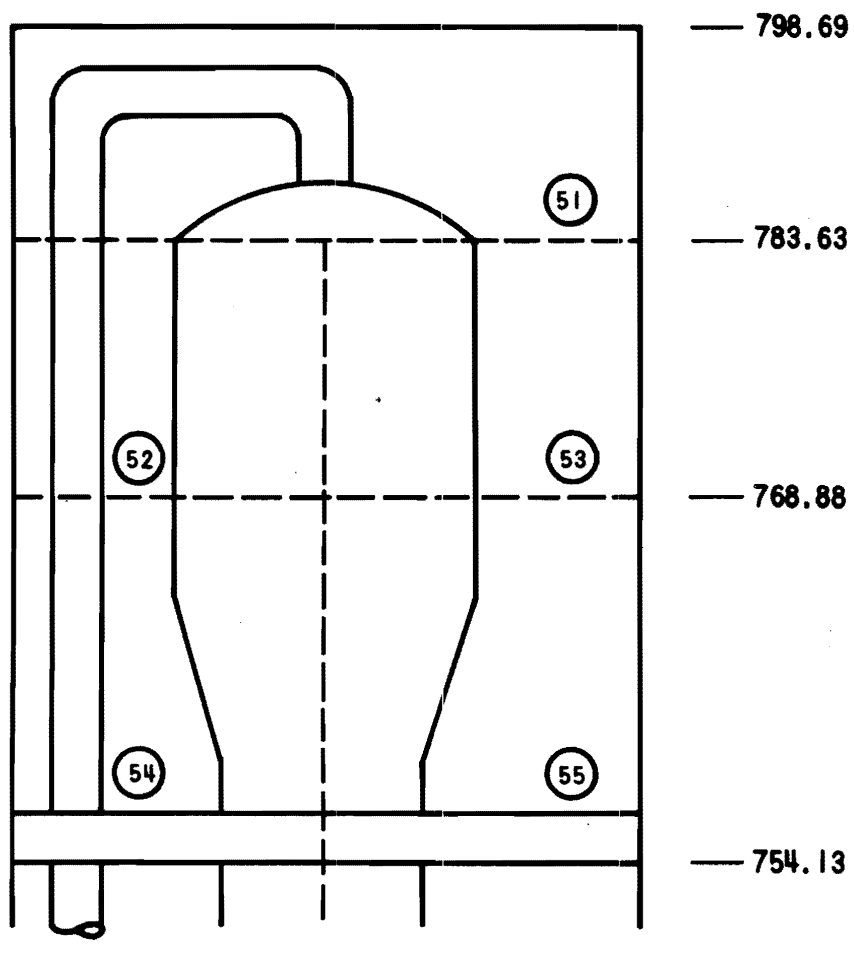

Figure 6.2.1-81 Steam Generator Enclosure Nodalization

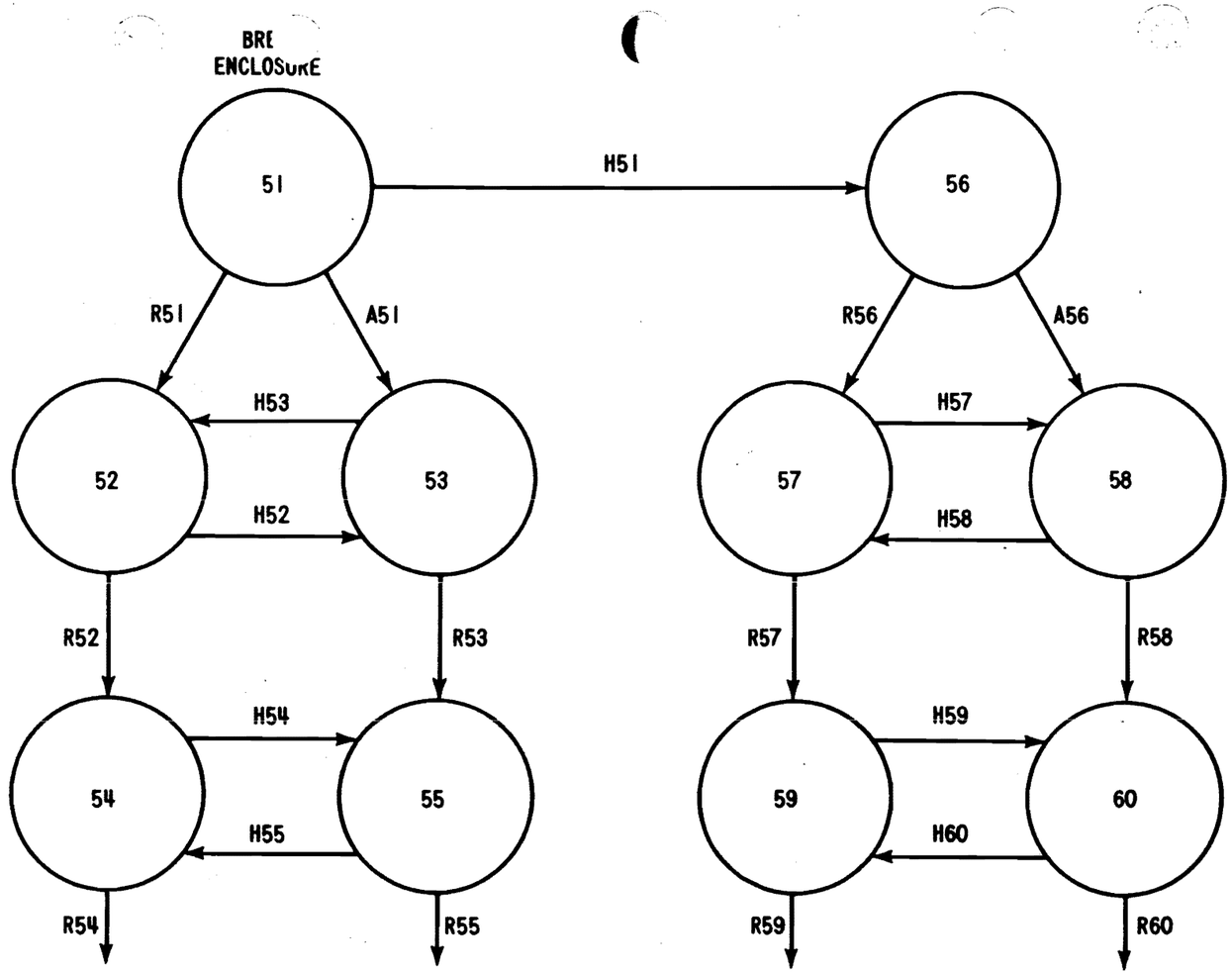

11.002-2

Figure 6.2.1-82 Flow Paths For TMD Steam Generator Enclosure Short-term Pressure Analysis

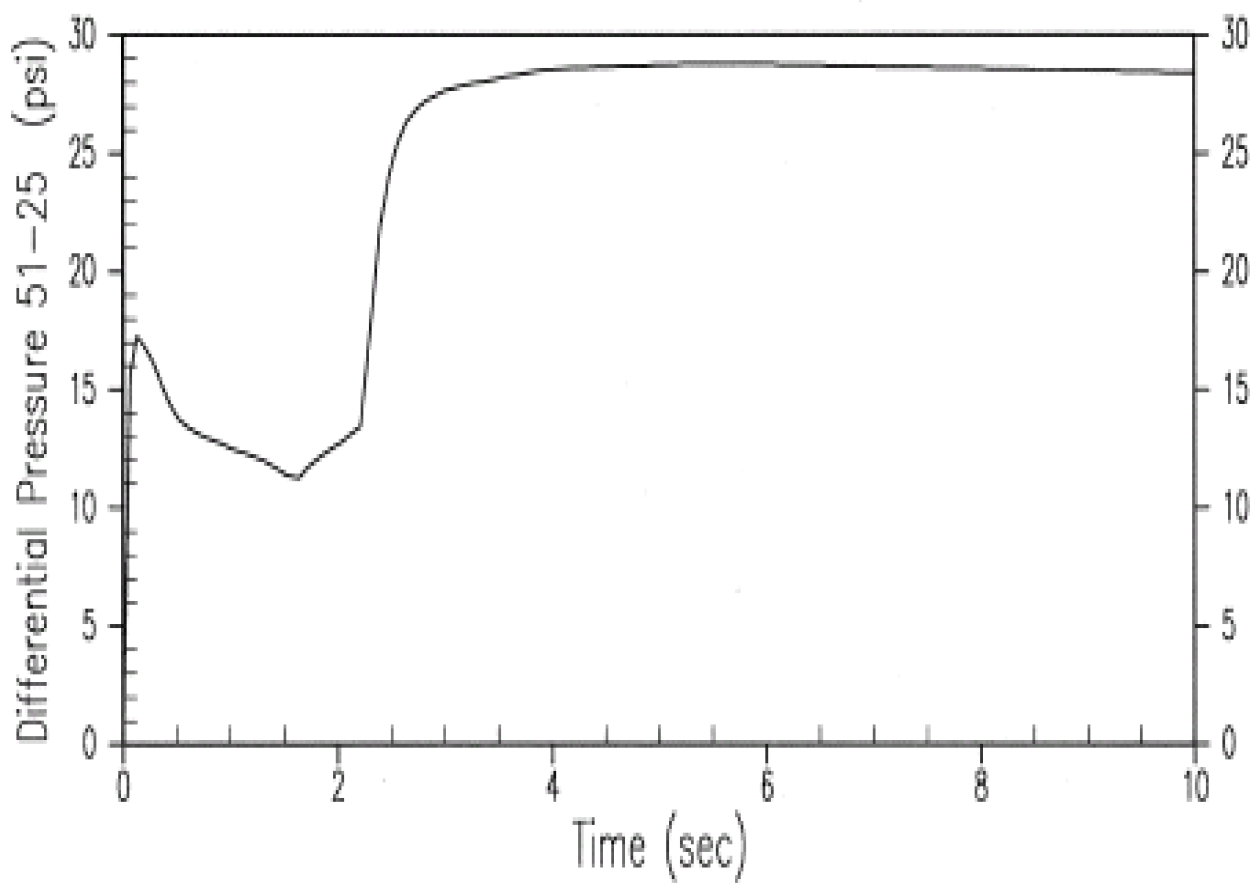

Figure 6.2.1-83 Pressure Transient Between Break Element And Upper Compartment (Steam Generator Enclosure Analysis)

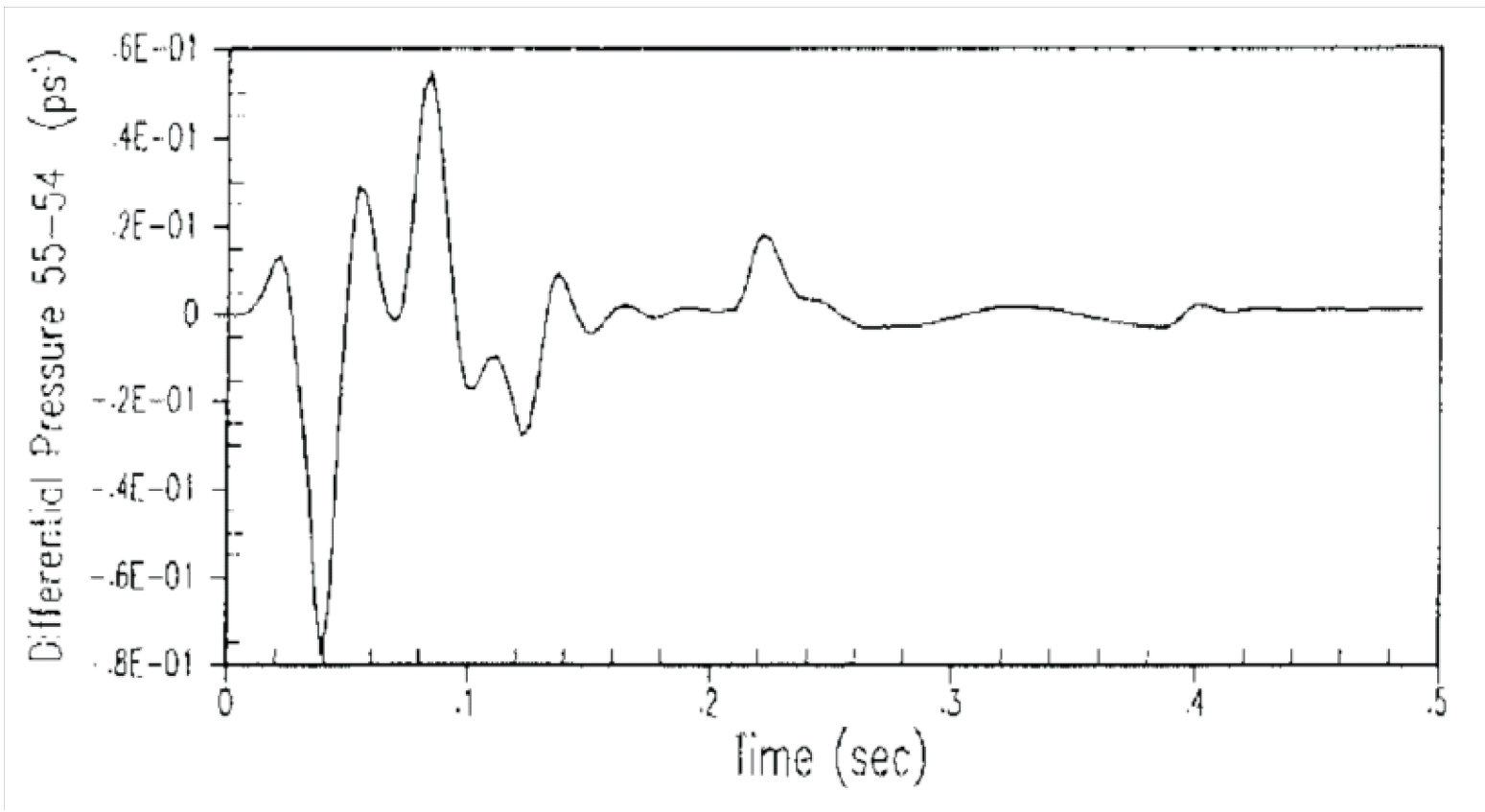

Figure 6.2.1-84 Differential Pressure Transient Across The Steam Generator Vessel (Steam Generator Enclosure Analysis)

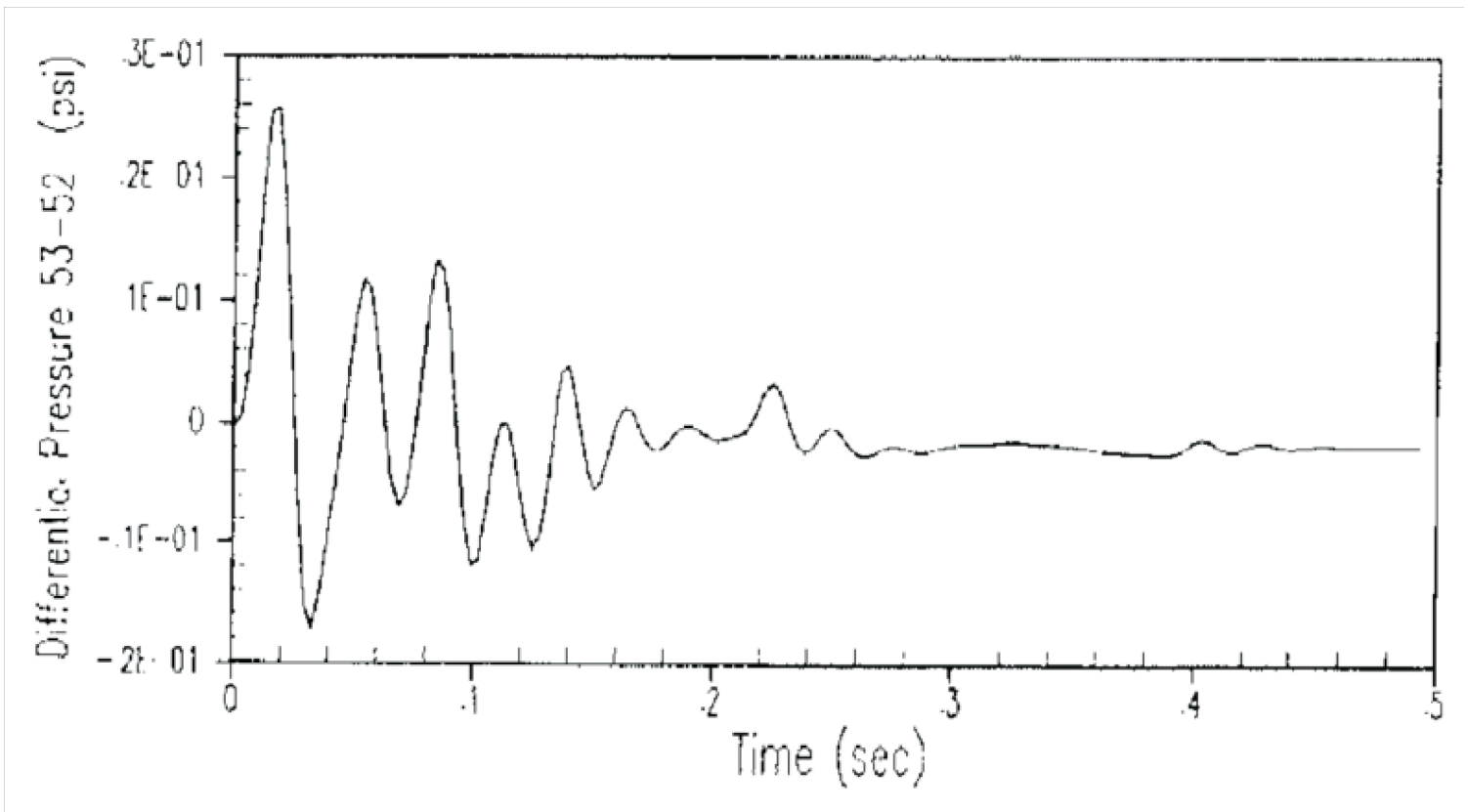

Figure 6.2.1-85 Differential Pressure Transient Across The Steam Generator Vessel (Steam Generator Enclosure Analysis)

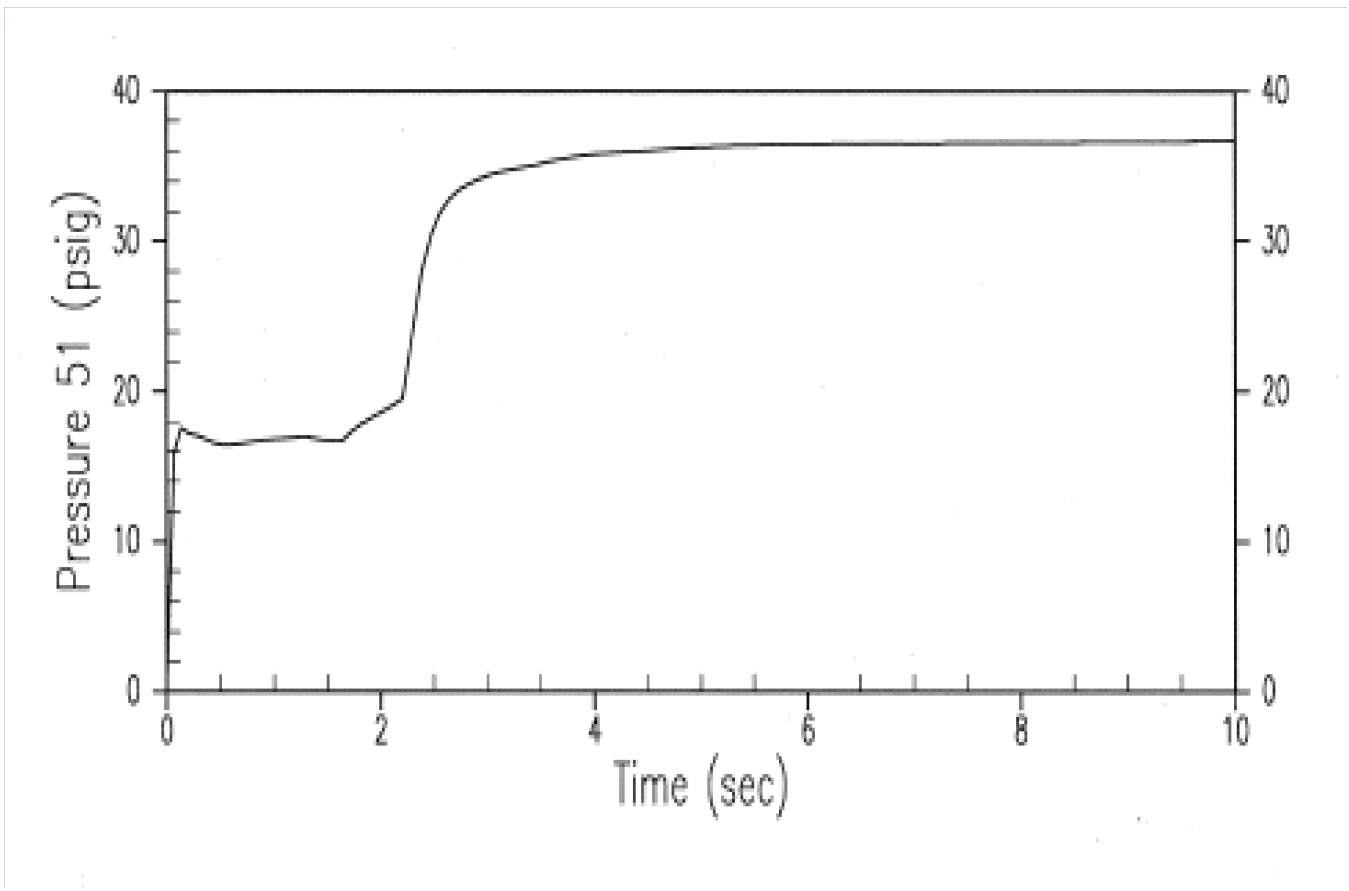

Figure 6.2.1-86 Pressure Versus Time For The Break Element (Steam Generator Enclosure Analysis)

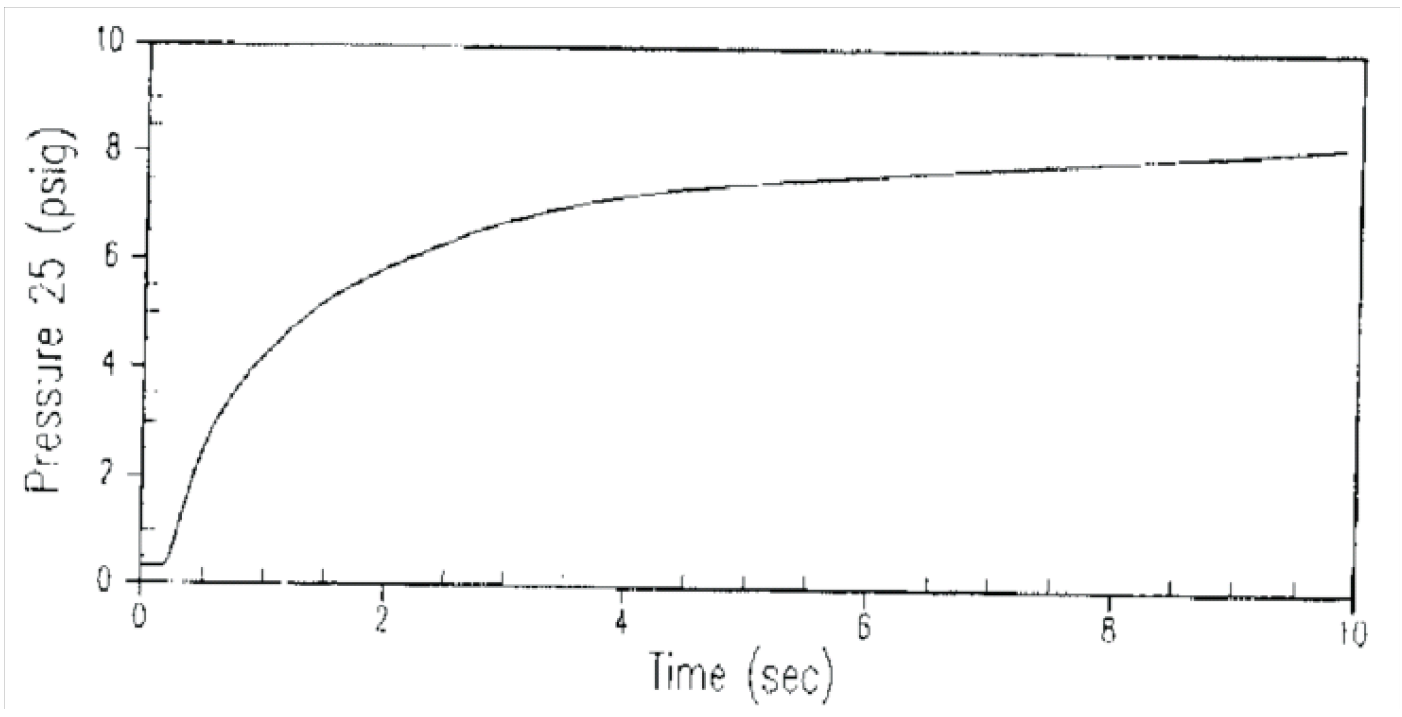

Figure 6.2.1-86a Upper Compartment Pressure Versus Time (Steam Generator Enclosure Analysis)

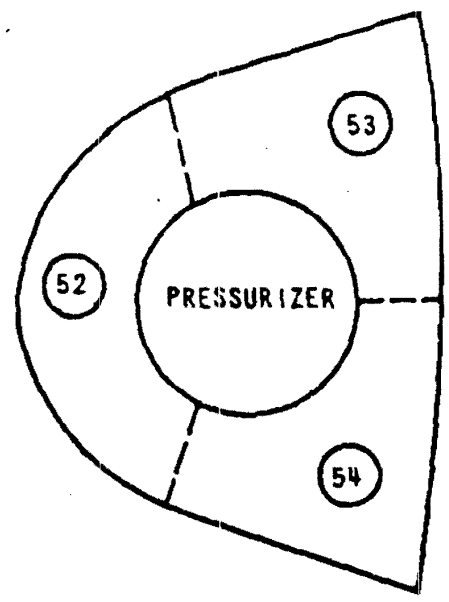

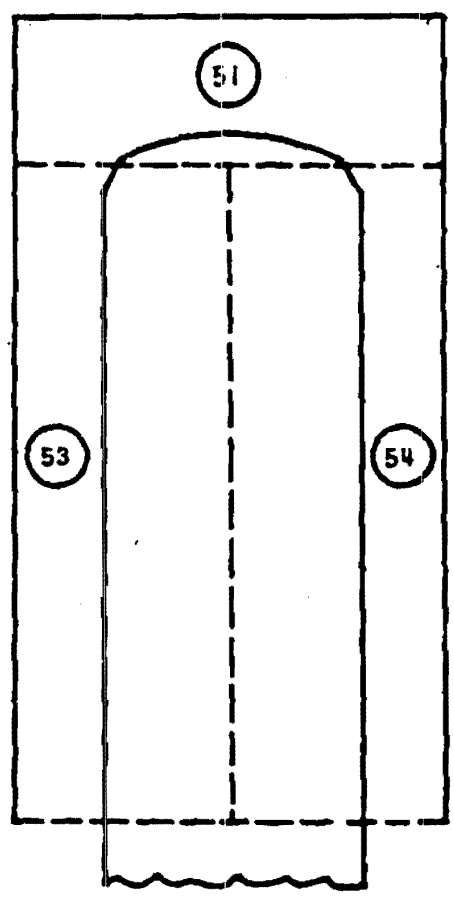

REVISED BY AMENDMENT 89

WATTS BAR NUCLEAR PLANT
FINAL SAFETY
ANALYSIS REPORT

NODALIZATION
PRESSURE ENCLOSURE ANALYSIS

figure 6.2.1-87

SCANNED DOCUMENT
THIS IS A SCANNED DOCUMENT MAINTAINED ON THE WBNP OPTIGRAPHICS SCANNER DATABASE

Figure 6.2.1-87 Nodalization Pressure Enclosure Analysis

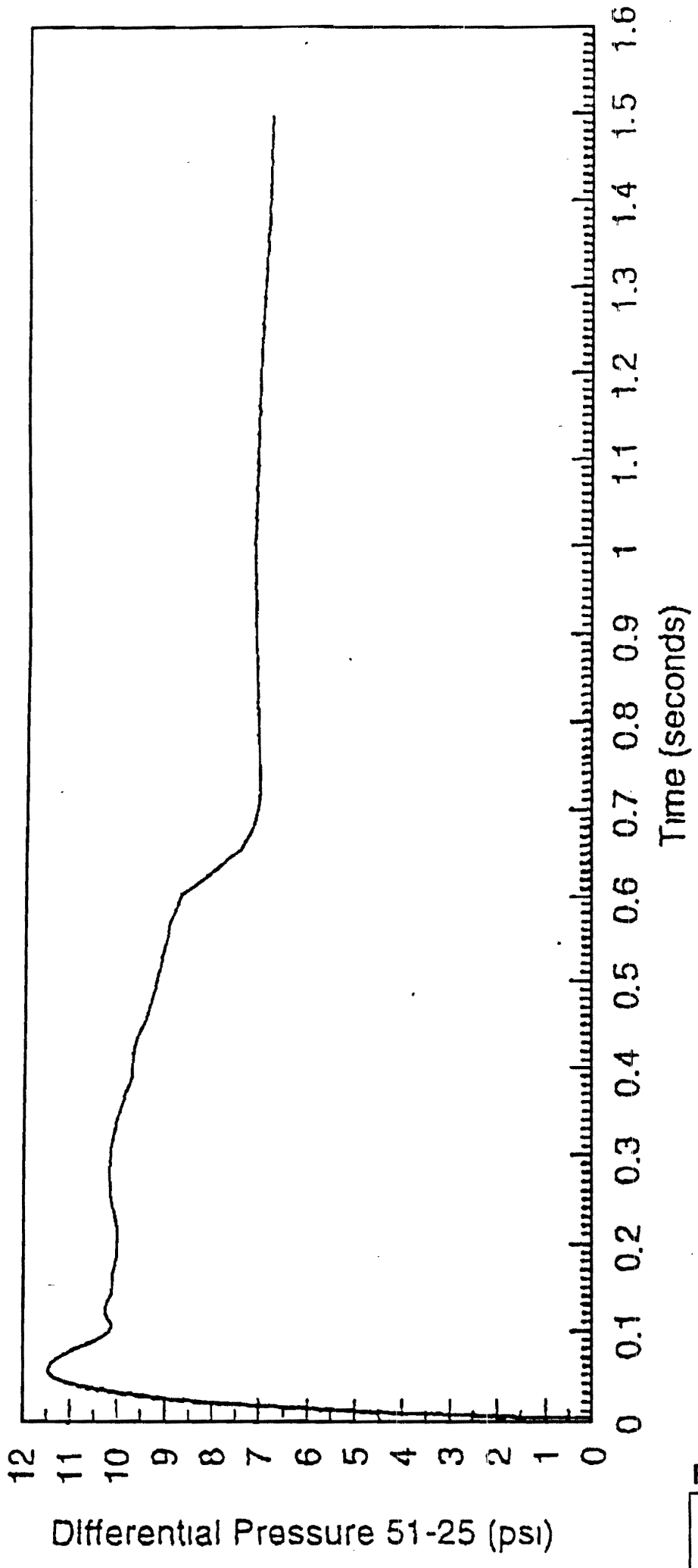

REVISED BY AMENDMENT 89

WATTS BAR NUCLEAR PLANT
FINAL SAFETY
ANALYSIS REPORT

PRESSURE TRANSIENT BETWEEN BREAK ELEMENT AND UPPER COMPARTMENT (PRESSURIZER ENCLOSURE ANALYSIS)
figure 6.2.1-88

SCANNED DOCUMENT
THIS IS A SCANNED DOCUMENT MAINTAINED ON THE WBNP OPTIGRAPHICS SCANNER DATABASE

Figure 6.2.1-88 Pressure Transient Between Break Element And Upper Compartment (Pressurizer Enclosure Analysis)

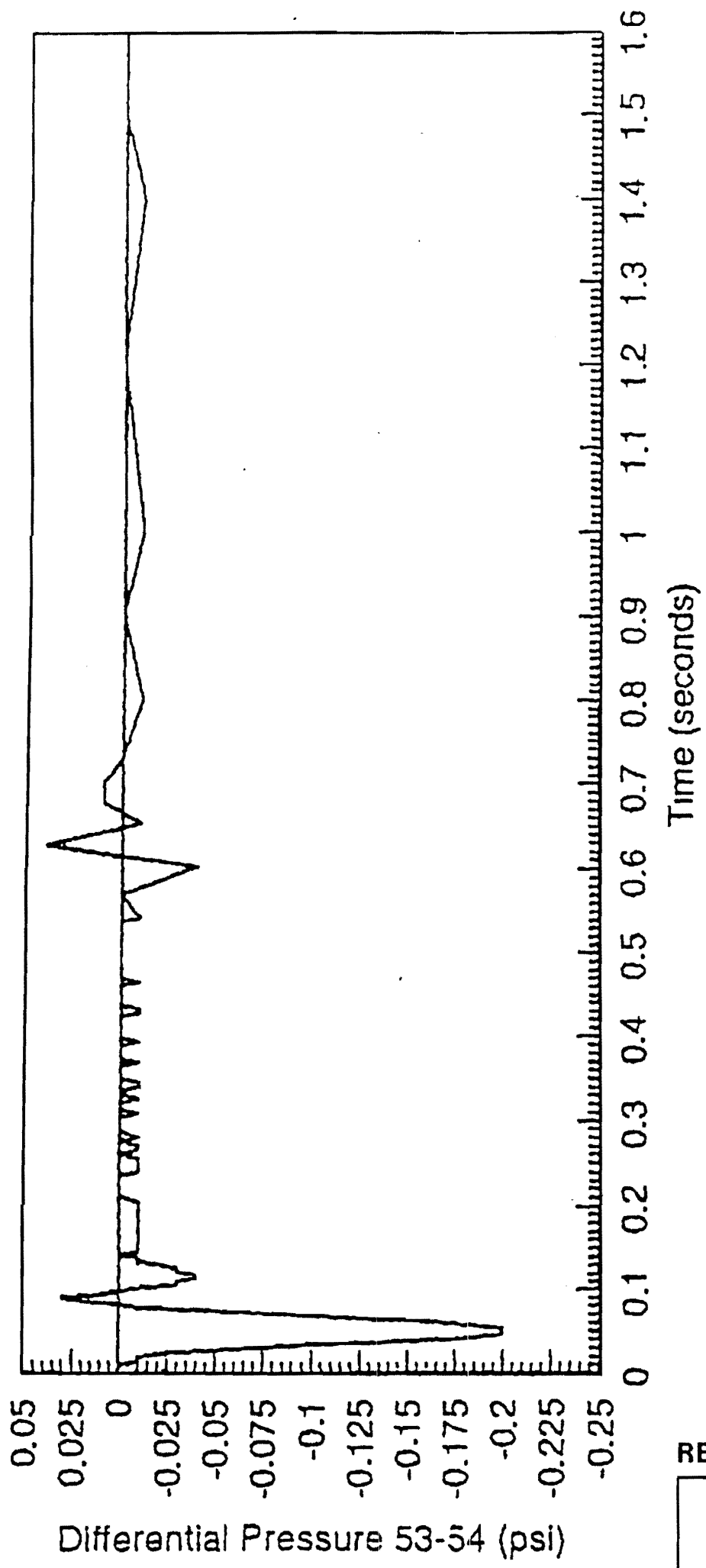

REVISED BY AMENDMENT 89

WATTS BAR NUCLEAR PLANT
FINAL SAFETY
ANALYSIS REPORT

PRESSURE DIFFERENTIAL ACROSS
THE PRESSURIZER VESSEL
(PRESSURIZER ENCLOSURE ANALYSIS)
figure 6.2.1-89

SCANNED DOCUMENT
THIS IS A SCANNED DOCUMENT MAINTAINED ON
THE WBNP OPTIGRAPHICS SCANNER DATABASE

Figure 6.2.1-89 Pressure Differential Across The Pressurizer Vessel (Pressurizer Enclosure Analysis)

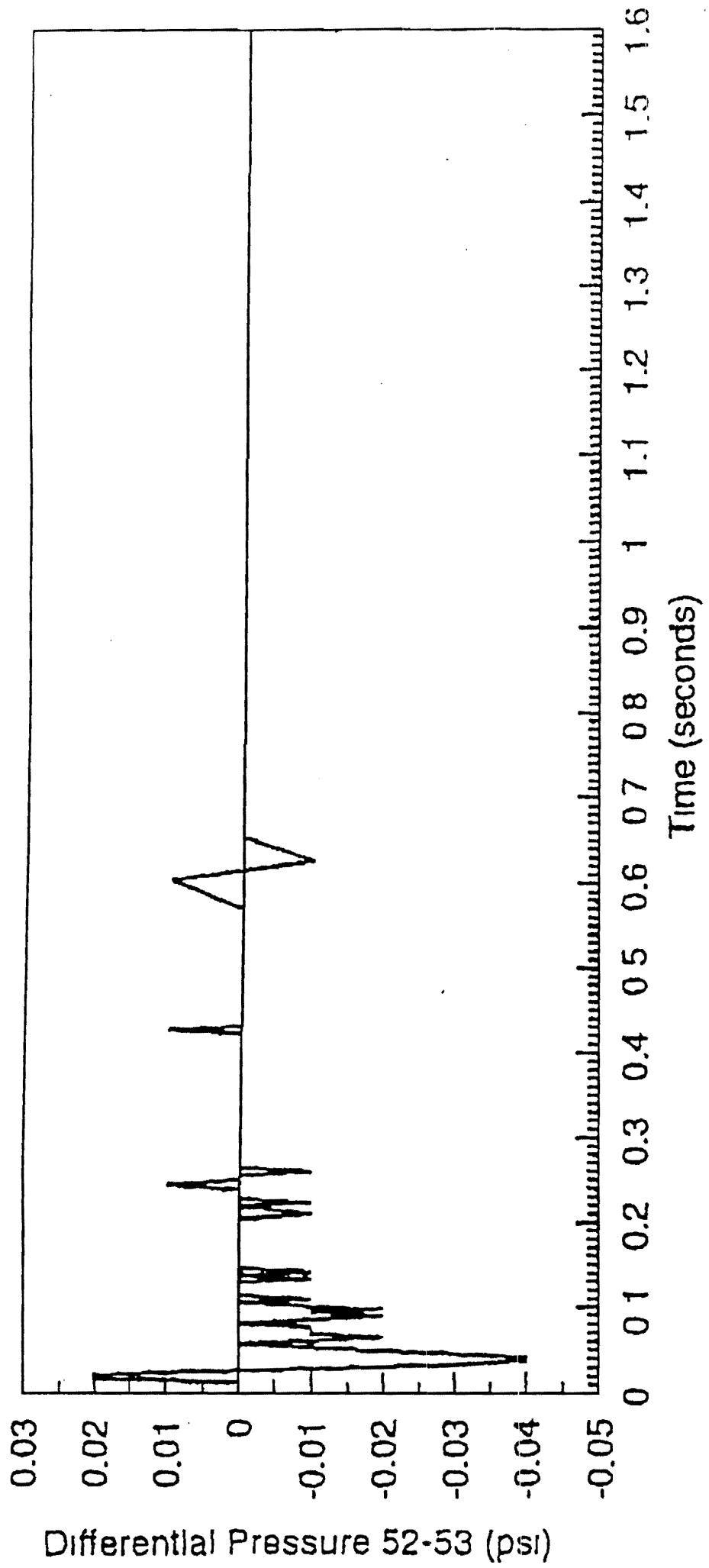

REVISED BY AMENDMENT 89

WATTS BAR NUCLEAR PLANT
FINAL SAFETY
ANALYSIS REPORT

PRESSURE DIFFERENTIAL ACROSS
THE PRESSURIZER VESSEL
(PRESSURIZER ENCLOSURE ANALYSIS)
figure 6.2.1-90

SCANNED DOCUMENT
THIS IS A SCANNED DOCUMENT MAINTAINED ON
THE WBNP OPTIGRAPHICS SCANNER DATABASE

Figure 6.2.1-90 Pressure Differential Across The Pressurizer Vessel (Pressurizer Enclosure Analysis)

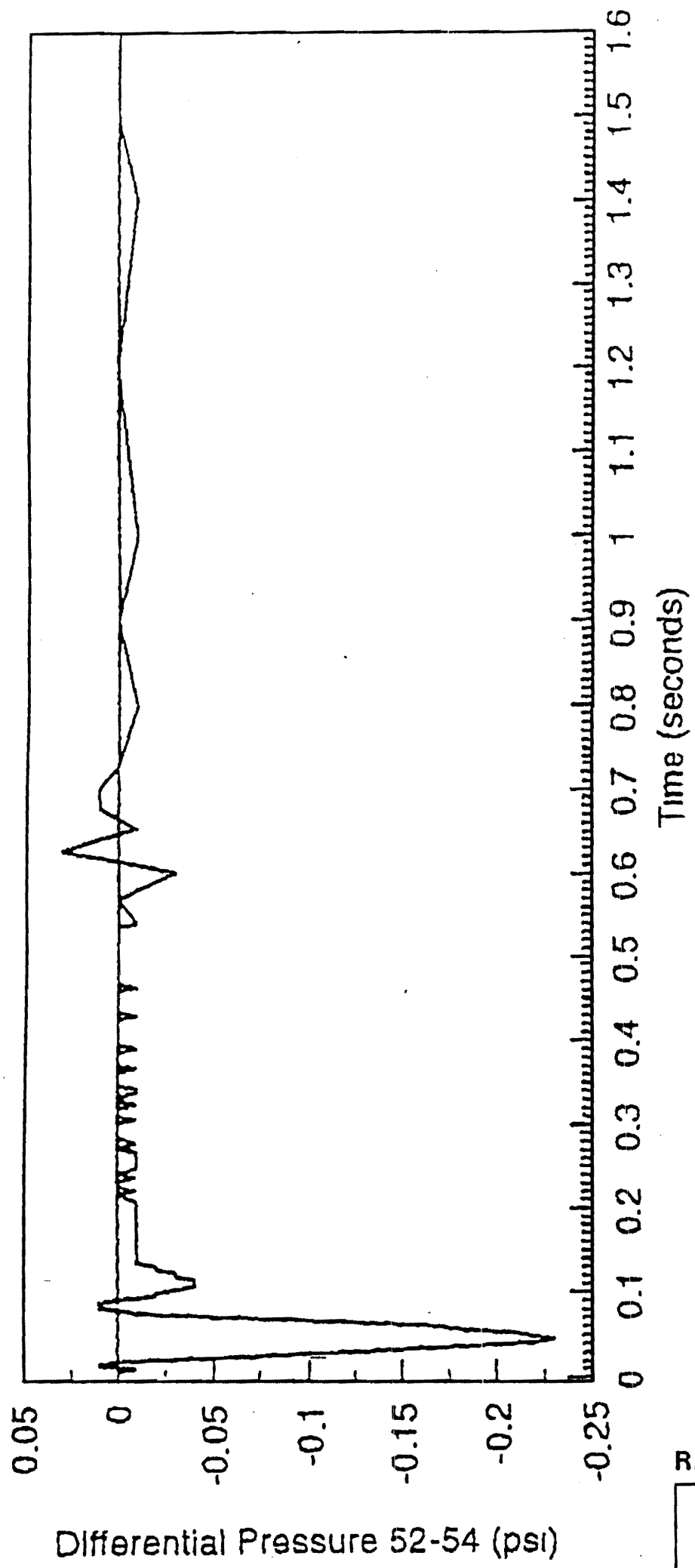

REVISED BY AMENDMENT 89

WATTS BAR NUCLEAR PLANT
FINAL SAFETY
ANALYSIS REPORT

PRESSURE DIFFERENTIAL ACROSS
THE PRESSURIZER VESSEL
(PRESSURIZER ENCLOSURE ANALYSIS)
figure 6.2.1- 91

SCANNED DOCUMENT
THIS IS A SCANNED DOCUMENT MAINTAINED ON
THE WBNP OPTIGRAPHICS SCANNER DATABASE

Figure 6.2.1-91 Pressure Differential Across The Pressurizer Vessel (Pressurizer Enclosure Analysis)

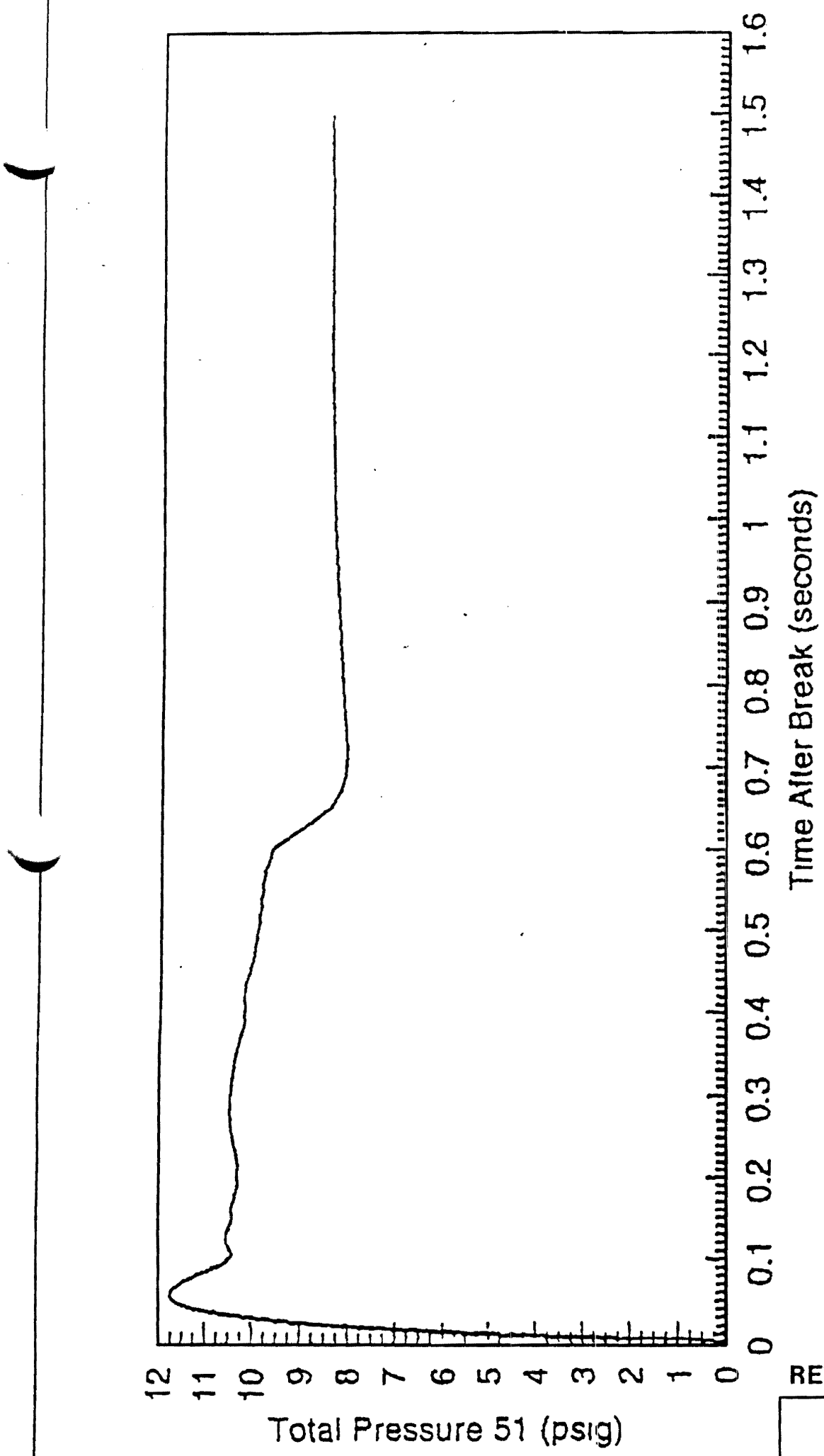

REVISED BY AMENDMENT 89

WATTS BAR NUCLEAR PLANT
FINAL SAFETY
ANALYSIS REPORT

PRESSURE VERSUS TIME
FOR THE BREAK ELEMENT
(PRESSURIZER ENCLOSURE ANALYSIS)
figure 6.2.1-92

SCANNED DOCUMENT
THIS IS A SCANNED DOCUMENT MAINTAINED ON THE WBNP OPTIGRAPHICS SCANNER DATABASE

Figure 6.2.1-92 Pressure Versus Time For The Break Element (Pressurizer Enclosure Analysis)

THIS PAGE INTENTIONALLY BLANK

6.2.2 CONTAINMENT HEAT REMOVAL SYSTEMS

Adequate containment heat removal capability for the ice condenser reactor containment is provided by the ice condenser (Section 6.7), the air return fan system (Section 6.8), and two separate containment heat removal spray systems whose components operate in the sequential modes described in Section 6.2.2.2. One of these heat removal spray systems is the containment spray system, and the second is the residual heat removal spray system, which is a portion of the residual heat removal system (Section 6.3).

Minimum engineered safety feature performance of the containment heat removal systems is achieved with the following:

(1) Ice condenser (Section 6.7)

(2) One train of the air return fan system

(3) One train of the containment spray system

(4) One train of the residual heat removal spray system (not required for steam or feed line break)

Each spray system consists of two trains of redundant equipment per reactor unit. There are four spray headers per unit. Two headers are supplied from separate trains of the containment spray system; the other two are supplied by separate trains of the RHR spray system. Each individual train consists of a pump, a heat exchanger, appropriate control valves, required piping, and a header with nozzles located in the upper compartment of the containment with flow directed to obtain full coverage of the containment upper volume during an emergency. The systems use borated water supplied from the refueling water storage tank and/or the recirculation sump.

6.2.2.1 Design Bases

The primary design basis for the containment heat removal spray systems is to spray cool water into the containment atmosphere when appropriate in the event of a loss-of-coolant accident or secondary side break and thereby ensure that the containment pressure cannot exceed the containment shell maximum internal pressure of 15.0 psig at 250°F, which corresponds to the code design internal pressure of 13.5 psig at 250°F (see Section 3.8.2). This protection is afforded for all pipe break sizes up to and including the hypothetical instantaneous circumferential rupture of the reactor coolant loop resulting in unobstructed flow from both pipe ends. After the ice has melted, the containment spray system and the residual heat removal spray system become the sole systems for removing energy directly from the containment. The containment heat removal systems are designed to provide a means of removing containment heat without loss of functional performance in the post-accident containment environment and operate without benefit of maintenance for the duration of time to restore and maintain containment conditions at atmospheric pressure. Although the water in the core after a loss-of-coolant accident is quickly subcooled by the emergency core cooling system (Section 6.3), the design of heat removal capability of each

containment heat removal system is based on the conservative assumption that the core residual heat is released to the containment as steam which eventually melts all ice in the ice condenser.

The containment spray system provides two redundant heat removal trains. The system is designed such that both trains are automatically started by high-high containment pressure signal. The signal actuates, as required, all controls for positioning all valves to their operating position and starts the pumps. The operator can also manually actuate the entire system from the control room. Either of the two trains containing a pump, heat exchanger, and associated valving and spray headers is independently capable of delivering a minimum flowrate of 4,000 gpm.

The containment heat removal spray systems are designed to withstand the design basis earthquake and the operational basis earthquake without loss of function. They satisfy the TVA Class B Mechanical Requirements. The heat exchanger tube side (CSS) meets TVA Class B and the shell side (ERCW) meets TVA Class C mechanical requirements. The containment heat removal spray systems maintain their integrity and do not suffer loss of ability to perform their minimum required function due to normal operation, faults of moderate frequency, infrequent faults, and limiting faults.

Sufficient redundancy for all supporting systems necessary for minimum operational requirements of the containment heat removal spray systems is provided and complies with the single failure criteria for engineered safety features. Separate divisions on essential raw cooling water supply, power equipment heat exchangers, pumps, valves, and instrumentation are provided in order to have two completely separated trains.

The system is provided with overpressure protection from excessive pressures that could otherwise result from temperature changes, interconnection with other systems operating at higher pressures, or other means.

Those portions of the containment heat removal spray systems located outside of the containment which are designed to circulate, during post-accident conditions, radioactively contaminated water collected in the containment meet the following requirements:

(1) Shielding within guidelines of 10 CFR 20 and 10 CFR 100.

(2) Collection of discharges from pressure relieving devices.

(3) Remote means for isolating any sections under anticipated malfunction or failure conditions.

(4) Means to detect and control radioactivity leakage into the environs to limits consistent with guidelines set forth in 10 CFR 20 and 10 CFR 100.

During accident conditions, cooling of the containment spaces is provided by the ice condenser system, containment heat removal spray systems, and the air return system. In addition, during non-LOCA accidents, the lower compartment cooler (LCC) fans are utilized to recirculate air throughout the lower containment spaces to prevent

hot pockets from developing. The LCC units may be operated continuously throughout all accidents, except a MSLB, which do not initiate a containment Phase B isolation signal. After a MSLB all four coolers (2 Train A and 2 Train B) are started although only 2 are required, within $1^1/_2$ hours to 4 hours after the MSLB to recirculate air throughout the lower containment spaces, to prevent hot spots from developing. During or after a LOCA, the LCC units, including their fans, are not required to be operable.

6.2.2.2 System Design

The containment spray systems consist of two separate trains of equal capacity with each train independently capable of meeting system requirements. This system can be supplemented with two residual heat removal system pumps and two residual heat exchangers in parallel, with associated piping, valves and individual spray headers in the upper containment volume. Each train includes a pump, heat exchanger, ring header with nozzles, isolation valves and associated piping, and instrumentation and controls. Partial flow from an RHR system pump through its associated heat exchanger can be used to supplement each train. Independent electrical power supplies are provided for equipment in each containment spray train. In addition each train is provided with electrical power from separate emergency diesel generators in the event of a loss of offsite electrical power. During normal operation, all of the equipment is idle and the associated isolation valves are closed.

Upon system activation during a LOCA or other high energy line break, adequate containment cooling is provided by the containment spray systems whose components operate in sequential modes. These modes are: 1) spraying a portion of the contents of the refueling water storage tank into the containment atmosphere using the containment spray pumps; 2) after the refueling water storage tank has been drained, but while there is still ice remaining in the ice condenser, recirculation of water from the containment sump through the containment spray pumps, through the containment spray heat exchangers, and back to the containment (This spray is useful in reducing sump water temperatures.); 3) diversion of a portion of the recirculation flow from the residual heat removal system to additional spray headers. RHR spray operation is initiated manually by the operator only if the emergency core cooling system and containment spray system are both operating in the recirculation mode. If switchover to recirculation occurs prior to 1 hour after initiation of the LOCA, RHR spray operation can be commenced 1 hour after initiation of the LOCA. If switchover to recirculation occurs later than 1 hour after initiation of the LOCA, RHR spray operation can be commenced after completion of the switchover procedure.

The spray water from the containment and RHR spray systems returns from the upper compartment to the lower compartment through two 14 inch drains in the bottom of the refueling canal. The curbing around the personnel access door and the equipment access hatch on the operating deck directs spray water flow towards the refueling canal. The air-water mixture entering the air return fans will be rerouted inside the polar crane wall through the accumulator rooms utilizing curbing, the floor hatch cover and floor drainage system.

The flow diagram for this system is presented in Figure 6.2.2-1.

Component Description

Pumps

The containment spray system flow is provided by two centrifugal type pumps driven by electric motors. The motors, which can be powered either normally or from an emergency source are direct coupled and non-overloading to the end of the pump curve. The design head of the containment spray pump is sufficient to ensure rated capacity with a minimum level in the refueling water storage tank or the containment sump when pumping against a head equivalent to the sum of the maximum pressure of the containment post LOCA/HELB, the elevational head between the pump discharge and the uppermost spray nozzles, and the equipment and piping friction losses. Each pump is rated for 4000 gpm flow at a design head of 435 ft. See Table 6.2.2-1 for additional design parameters and Figure 6.2.2-2 for characteristic curves.

The residual heat removal pumps which also provide flow to the containment heat removal spray system are described in Section 5.5.7.2.1 and Table 5.5-8.

Each residual heat removal pump provides a design flow of 2000 (1475 gpm analytical) for upper containment spray.

Each containment spray pump is powered by a horizontal squirrel cage induction motor. Pump motor parameters are presented in Table 6.2.2-1.

Net Positive Suction Head (NPSH)

The plant and piping layout of the containment spray system ensures that the pump NPSH requirements are met at maximum runout conditions with the containment spray pumps taking suction from either the refueling water storage tank or the containment sump. The NPSH available from the containment sump is calculated using the maximum credible sump water temperature (190°F) with no credit taken for containment overpressure or height of water in the containment sump.

Heat Exchangers

The containment spray heat exchangers are the vertical counter flow U-tube type with tubes welded to the tube sheet. Borated water from either the refueling water storage tank or the containment sump circulates through the tube side. Design parameters are presented in Table 6.2.2-2.

Piping

All containment heat removal spray system piping in contact with borated water is austenitic stainless steel. All piping joints are welded except for the flanged connection at the pump or where disassembly of the joint may be required.

Spray Nozzles and Ring Headers

Each containment spray ring header provides 4000 gpm minimum and contains 263 hollow cone ramp bottom nozzles, each of which is capable of a design flow of 15.2 gpm with a 40 psi differential pressure. These nozzles have an approximately 3/8-inch

diameter spray orifice and are not subject to clogging by particles less than 1/4 inch in maximum dimension. The nozzles produce a drop size spectrum with a median diameter of less than 700 microns at 40 psid. The spray solution is completely stable and soluble at all temperatures of interest in the containment and, therefore, does not precipitate or otherwise interfere with nozzle performance. Each nozzle header is independently oriented to maximize coverage of the containment volume inside the crane wall. This arrangement prohibits any flow into the ice condenser.

The residual heat removal spray ring headers contain 146 nozzles per header and deliver a design flow of 2000 gpm (1475 gpm analytical) per header. Each RHR spray header will perform its required design function with 142 unobstructed spray nozzles. They have the same design characteristics as the headers in the containment spray system.

Refueling Water Storage Tank

During the injection phase immediately following a LOCA or HELB, the containment spray is supplied from the refueling water storage tank.

Recirculation Sump

The recirculation sump is described in Section 6.3.2.2 under the discussion of the recirculation mode.

Material Compatibility

All parts of the containment spray system in contact with borated water are austenitic stainless steel or equivalent corrosion resistant material.

6.2.2.3 Design Evaluation

Performance of the containment heat removal system is evaluated through analyses of the design basis accident and various other cases described in Chapter 15 and Section 6.2.1. The analyses were performed using the LOTIC code and show that the containment heat removal systems are capable of keeping the containment pressure below the containment maximum internal pressure of 15 psig, which corresponds to the code design internal pressure of 13.5 psig at 250°F (see Section 3.8.2) even when it is assumed that the minimum engineered safety features are operating. Section 6.2.1 presents a description of the analytical methods and models which were used along with verification of pertinent items from Waltz Mill tests, and curves showing the calculated performance of important variables following the design-basis loss-of-coolant accident.

The design basis accident analysis (Section 6.2.1.3.3) results in a required containment spray flow rate of 4000 gpm using 88°F** constant temperature essential raw cooling water for the heat exchangers.

1 **Note: The containment analysis was run at ERCW temperature of 88°F although the containment spray, component cooling, and residual heat removal Hx UA values are based on ERCW temperature of 85°F to provide additional conservatism.

The containment spray systems provide two full-capacity heat removal systems for the containment, each of which is sized as described in Section 6.2.2.1 to remove heat at a rate which precludes an increase of the containment maximum internal pressure above 15.0 psig, which corresponds to the code design internal pressure of 13.5 psig at 250°F (see Section 3.8.2). All spray headers and spray nozzles are located inside the containment in the upper compartment and can withstand, without loss of function or maintenance, the post-accident containment environment. The remainder of the systems, with the exception of the refueling water storage tanks, which includes all active components, are located in the Auxiliary Building and, therefore, are not affected by wind, tornado, or snow and ice conditions.

The design is based on the spray water being raised to the saturation temperature of the containment in falling through the steam-air mixture within the building. The minimum fall path of the droplets is approximately 75 ft from the spray ring headers to the operating deck. The actual fall path is longer due to the trajectory of the droplets sprayed out from the ring header nozzles. Figures 6.2.2-3 through 6.2.2-6 depict the containment spray coverage for the containment spray system.

Except for the refueling water storage tank water supplied by the safety injection system, the containment spray system initially operates independently of other engineered safety features. For extended operation in the recirculation mode, water is supplied to the containment RHR spray headers through the residual heat removal pumps and residual heat removal exchangers. One containment spray system train, supplemented by one RHR spray train, when required, provides adequate heat removal capability to limit containment pressure below design (see Section 6.2.1.3). RHR spray is required only after switchover to the recirculation mode and no earlier than 1 hour after initiation of the LOCA. At this time one RHR pump can provide sufficient RHR spray as well as adequate core flow via the high head (one centrifugal charging and one safety injection) pumps. (See Section 6.3.3 for the performance evaluation of the RHR pumps in their core cooling function.)

All active components of the system were analyzed to show that the failure of any single active component does not prevent fulfilling the design function. This analysis is summarized in Table 6.2.2-3. A single failure in the residual heat removal system will not prevent long-term use of the spray system. The analyses of the loss-of-coolant accident presented in Chapter 15 reflect the single failure analysis. Each of the spray trains provides complete backup for the other.

An analysis of the spray return drains located in the refueling canal has been made to show that they are adequately sized for a maximum RHR and containment spray flow and ensures an adequate water supply in the lower compartment to satisfy pump NPSH requirements.

The passive portions of the spray systems located within the containment are designed to withstand, without loss of functional performance, a post accident containment environment and to operate without benefit of maintenance.

The spray headers which are located in the upper containment volume are separated from the reactor and primary coolant loops by the operating deck and inner wall of the ice bed. These spray headers are therefore protected from missiles originating in the lower compartment.

This evaluation shows that the containment spray systems can withstand expected conditions during the 40-year life of the plant without loss of capability to perform the required safety functions. Specifically, the system achieved this by having been designed to meet applicable General Design Criteria (GDC) as follows:

(1) The systems can withstand the effects of natural phenomena as required by GDC 2.

(2) The systems are designed to accommodate the effects of and be compatible with the environmental conditions associated with normal operation, maintenance, testing, and postulated accidents including loss of coolant as required by GDC 4.

(3) The systems are not shared with another nuclear power unit as required by GDC 5.

(4) The systems are designed to be capable of being inspected and tested to ensure reliability throughout their life as required by GDC 39 and 40.

(5) The systems are designed adequately to provide post-accident cooling inside the primary containment to reduce the containment pressure and temperature following any LOCA and maintain them at acceptable levels, as required by GDC 38.

(6) The systems are designed to aid in the control and removal of fission products, hydrogen, oxygen, and other substances which may be released into the reactor containment following postulated accidents to assure that containment integrity is maintained, as required by GDC 41.

Tritium Production Core Evaluation (Unit 1 Only)

The effects of converting WBN to a Tritium Production Core (TPC) on the containment heat removal systems have been evaluated. The evaluation includes the effect of adding a leading edge flow meter (LEFM) into the main feedwater piping and the effect of uprating the plant nominal power level by 1.4%.

Based on the conclusions in Section 6.2.3.12 that mass and energy releases for LOCA and secondary side pipe ruptures do not have an adverse impact on the primary containment functionality due to incorporation of a TPC, the containment heat removal system will not be impacted.

6.2.2.4 Testing and Inspections

Performance tests of the active components in the system are performed in the manufacturer's plant and followed by in-place preoperational testing.

Capability is provided to test initially and subsequently on a routine basis to the extent practical the operational startup sequence and performance capability of the containment spray system including the transfer to alternate power sources. Capability to test periodically the delivery capacity of the containment spray system at a position as close to the spray header as is practical and for obstruction of the spray nozzles is provided. As part of the preoperational test program, the containment spray nozzles are physically verified to pass an unobstructed flow of air. The air is introduced into the headers through an air test connection on each header.

Initially, the containment spray system is hydrostatically tested to the applicable code test pressure.

All periodic tests of individual components or the complete containment spray system are controlled to ensure that plant safety is not jeopardized and that undesirable transients do not occur.

The containment spray system is designed to comply with ASME Section XI, "Inservice Inspection of Nuclear Reactor Coolant System." Detailed test procedures are given in Chapter 14.

6.2.2.5 Instrumentation Requirements

The containment spray system is actuated either manually from the control room or external to the main control room or automatically by the coincidence of two sets out of four protection set loops monitoring the lower containment pressure. The high-high containment pressure signal starts the containment spray pumps and positions all valves to their operating configuration.

The operation of the containment spray system is verified by instrument readout in the control room. Pump motor breakers energize indicating lights on the control panel to show power is being supplied to the pump motors. Status lights on the main control panel indicate valve position and are energized independently of the valve actuation signal.

To protect the pumps from low flow conditions, a mini-flow recirculation line is provided to allow pump discharge to be circulated back into the pump suction line. This line is opened by a motor-operated valve when flow in the discharge line drops below that required for pump protection or if, upon starting, flow is not achieved in the spray header within a preset time interval. Elbow taps in each discharge line provide a delta-p measurement to monitor the flow rate and provide the flow signal for the control room flow indicators and to control the minimum flow recirculation valve.

Local instruments monitor the following parameters: containment spray pump suction and discharge pressure, heat exchanger inlet temperature, heat exchanger inlet and outlet pressure, and containment spray test line flow.

In the event of a main control room evacuation, the necessary control functions are transferable to outside of the main control room in order to assure that the system can be aligned and locked to prevent inadvertent operation and to manually initiate system

operation if necessary. The control transfer is provided for the spray pumps, containment spray isolation valves, and containment sump isolation valves.

The system is designed as Seismic Category I. The instrumentation and associated interconnected wiring and cables are physically and otherwise separated so that a single event cannot cause malfunction of the entire system.

6.2.2.6 Materials

All parts of the containment spray system in contact with borated water are austenitic stainless steel or equivalent corrosion-resistant material. None of these materials produce radiolytic or pyrolytic decomposition products that can interfere with this or other engineered safety features.

Table 6.2.2-1 Containment Spray Pump/Motor Design Parameters

Pump	
Quantity Per Unit	2
Design Pressure, psig	300
Design Temperature, °F	250
Design Flow Rate, gpm	4000
Design Head, ft	435
Motor	
Horsepower, hp	700
Service Factor	1.15
Voltage, V	6600
Phase	3
Cycles, Hz	60

Table 6.2.2-2 Containment Spray Heat Exchanger Design Parameters

Quantity Per Unit	2
Type	Counter Flow
Percent Tubes Plugged	10%
Heat Transfer Per Unit, Btu/hr	12.85×10^7
Shell-Side Flow, gpm	5,200
Tube-Side Flow, gpm	4,000
Tube-Side Inlet Temperature, °F	190
Shell-Side Inlet Temperature, °F	85
Tube-Side Outlet Temperature, °F	124.7
Shell-Side Outlet Temperature, °F	129.5
Design Pressure (Shell/Tube), psig	150/300
Design Temperature (Shell/Tube), °F	200/250
Heat Exchanger UA, Btu/hr-°F	2.44×10^6

Table 6.2.2-3 FAILURE MODES AND EFFECTS ANALYSIS
(Page 1 of 8)

ITEM NO.	COMPONENT	FUNCTION	FAILURE MODE	POTENTIAL CAUSE	METHOD OF DETECTION	EFFECTS ON SYSTEM	EFFECT ON PLANT	REMARKS
	INJECTION MODE							
1.	Containment Spray Pump A-A	To pump borated water to spray nozzles in the containment	Fails to start	Mechanical failure or electrical failure due to loss of power	Indication via switches HS-72-27A & -27C	CS System Train "A" is lost	None. Two 100% capacity trains are provided.	Only one train is required to mitigate accident consequences.
2.	Containment Spray Pump B-B	To pump borated water to spray nozzles in the containment	Fails to start	Mechanical failure or electrical failure due to loss of power	Indication via switches HS-72-10A & -10C	CS System Train "B" is lost	None. Two 100% capacity trains are provided.	Only one train is required to mitigate accident consequences.
3.	Valve FCV 72-21	Provide water flow path to CS PMP B-B	Fails closed	Mechanical failure blockage or spurious electrical signal	Valve position indication via switch HS-72-21A	CS System Train "B" is inoperable	None. CS System Train "A" is used to supply water to nozzles	Only one train is required to mitigate accident consequences.
4.	Valve FCV 72-22	Provide water flow path to CS PMP A-A	Fails Closed	Mechanical failure blockage or spurious electrical signal	Valve position indication via switch HS-72-22A	CS System Train "A" is inoperable	None. CS System train "B" is used to supply water to nozzles	Only one train is required to mitigate accident consequences.

Table 6.2.2-3 FAILURE MODES AND EFFECTS ANALYSIS
(Page 2 of 8)

ITEM NO.	COMPONENT	FUNCTION	FAILURE MODE	POTENTIAL CAUSE	METHOD OF DETECTION	EFFECTS ON SYSTEM	EFFECT ON PLANT	REMARKS
5.	Valve FCV 72-02	Water flow path to containment spray nozzles	Fails to open	Mechanical failure or loss of power to valve motor	Valve position indication via switches HS-72-2A/ HS-72-2B*	CS System Train "B" is lost	None. Two 100% capacity trains are provided.	Only one train is required to mitigate accident consequences.
			Recloses after opening	Mechanical failure or spurious electrical signal	Valve position indication via switches HS-72-2A/HS-72-2B	CS System Train "B" is lost	None. Two 100% capacity trains are provided.	Only one train is required to mitigate accident consequences.
6.	Valve FCV 72-039	Water flow path to containment spray nozzles	Fails to open	Mechanical failure or loss of power to valve motor	Valve position indication via switches HS-72-39A/ HS-72-39B	CS System Train "A" is lost	None. Two 100% capacity trains are provided.	Only one train is required to mitigate accident consequences.
			Recloses after opening	Mechanical failure or spurious electrical signal	Valve position indication via switches HS-72-39A/ HS-72-39B	CS System Train "A" is lost	None. Two 100% capacity trains are provided.	Only one train is required to mitigate accident consequences.
7.	Emergency power to Train A	Provide power to PMP A motor & all MOVs in Train A	Fails	Diesel generator shutdown Bd. 1A-A failure	Voltmeters in Control Room	CS System Train "A" is lost	None. Two 100% capacity trains are provided.	Only one train is required to mitigate accident consequences.

* Note: Valve position indication for Valve FCV-72-02 may be derived from indicator lights on all three hand switches (HS-72-2A, HS-72-2B or HS-72-2C). This is unique in that 2B hand switches have been removed from nearly all other applied uses due to EQ considerations.

Table 6.2.2-3 FAILURE MODES AND EFFECTS ANALYSIS
(Page 3 of 8)

ITEM NO.	COMPONENT	FUNCTION	FAILURE MODE	POTENTIAL CAUSE	METHOD OF DETECTION	EFFECTS ON SYSTEM	EFFECT ON PLANT	REMARKS
8.	Emergency Power to Train B	Provide power to PMP B motor & all MOVs in Train B	Fails	Diesel generator shutdown Bd. 1B-B failure	Voltmeters in Control Room	CS System Train "B" is lost	None. Two 100% capacity trains are provided.	Only one train is required to mitigate accident consequences.
9.	FCV-72-34	Isolate pump A-A discharge from suction	Fails open	Mechanical failure or spurious electrical signal	Valve position indication via switch HS-72-34A	Water flowing into spray nozzles will be diminished.	Train "A" capability reduced. No impact on plant; operator can put 100% train B in operation.	Only one train is required to mitigate accident consequences.
10.	FCV-72-13	Isolate pump B-B discharge from suction	Fails open	Mechanical failure or spurious electrical signal	Valve position indication via switch HS-72-13A	Water flowing into spray nozzles will be reduced.	Train "B" capability reduced. No impact on plant; operator can put 100% train A in operation.	Only one train is required to mitigate accident consequences.
11.	Check VA.72-506	Flow path to CS Pump A-A	Valve stuck closed	Mechanical failure	Pump discharge flow indicator FI-72-34	Train A is inoperable	None. Two 100% capability trains are provided.	

Table 6.2.2-3 FAILURE MODES AND EFFECTS ANALYSIS
(Page 4 of 8)

ITEM NO.	COMPONENT	FUNCTION	FAILURE MODE	POTENTIAL CAUSE	METHOD OF DETECTION	EFFECTS ON SYSTEM	EFFECT ON PLANT	REMARKS
12.	Check VA 72-507	Flow path to CS Pump B-B	Valve stuck closed	Mechanical failure	Pump discharge flow indicator FI-72-13	Train B is inoperable	None. Two 100% capability trains are provided.	
13.	Check VA 72-524	CS Pump A-A discharge flow path	Valve stuck closed	Mechanical failure	Flow measurement via flow indicator FI-72-34	Train A is inoperable	None. Two 100% capability trains are provided.	
14.	Check VA 72-525	CS Pump B-B discharge flow path	Valve stuck closed	Mechanical failure	Flow measurement via flow indicator FI-72-13	Train B is inoperable	None. Two 100% capability trains are provided.	
15.	Check VA 72-548	Flow path to Train A spray nozzles	Valve stuck closed	Mechanical failure	Pump discharge via flow indicator FI-72-34	Train A is inoperable	None. Two 100% capability trains are provided.	
16.	Check VA 72-549	Flow path to Train B spray nozzles	Valve stuck closed	Mechanical failure	Pump discharge via flow indicator FI-72-13	Train B is inoperable	None. Two 100% capability trains are provided.	

Table 6.2.2-3 FAILURE MODES AND EFFECTS ANALYSIS
(Page 5 of 8)

ITEM NO.	COMPONENT	FUNCTION	FAILURE MODE	POTENTIAL CAUSE	METHOD OF DETECTION	EFFECTS ON SYSTEM	EFFECT ON PLANT	REMARKS
17.	Relief VA 72-508	CS Pump A-A suction piping over-pressure protection	Valve fails open	Mechanical failure		Train A capacity will be diminished	None. Two 100% capacity trains provided.	
18.	Relief VA 72-509	CS Pump B-B suction piping over-pressure protection	Valve fails open	Mechanical failure		Train B capacity will be diminished	None. Two 100% capacity trains provided.	
	RECIRC. MODE ACTIVE FAILURE ----------							
19.	Valve FCV-72-44	Train A flow path from containment sump	Fails to open or recloses after opening	Mechanical failure or electrical failure	Valve position indication via switches HS-72-44A, HS-72-44B, HS-72-44C	Train "A" is inoperable	None. Two 100% capacity trains are provided.	
20	Valve FCV-72-45	Train B flow path from containment sump	Fails to open or recloses after opening	Mechanical failure or electrical failure	Valve position indication via switches HS-72-45A, HS-72-45B, HS-72-45C	Train "B" is inoperable	None. Two 100% capacity trains are provided.	

Table 6.2.2-3 FAILURE MODES AND EFFECTS ANALYSIS
(Page 6 of 8)

ITEM NO.	COMPONENT	FUNCTION	FAILURE MODE	POTENTIAL CAUSE	METHOD OF DETECTION	EFFECTS ON SYSTEM	EFFECT ON PLANT	REMARKS
21.	Valve FCV-72-22	Isolate "RWST" during recirc. mode	Fails to close	Mechanical failure or electrical failure	Valve position indication via switch HS-72-22A	Train "A" is inoperable	None. Two 100% capacity trains are provided.	Interlock will prevent opening of FCV-72-44.
22.	Valve FCV-72-21	Isolate "RWST" during recirc. mode	Fails to close	Mechanical failure or electrical failure	Valve position indication via switch HS-72-21A	Train "B" is inoperable	None. Two 100% capacity trains are provided.	Interlock will prevent opening of FCV-72-45.
23.	Containment Spray Heat Exch. A	Cools containment spray water	ERCW flow lost	ERCW Train A system mechanical or electrical failure	High CS water temp. indication via ICS point T0168A	CS water in Train A can not be cooled.	None. 100% capacity Train B will be operated.	
24.	Containment Spray Heat Exch. B	Cools containment spray water	ERCW flow lost	ERCW Train B system mechanical or electrical failure	High CS water temp. indication via ICS point T0169A.	CS water in Train B can not be cooled.	None. 100% capacity Train A will be operated.	
25.	Check VA 72-506	Isolate RWST during recirc. mode	Valve stuck open	Mechanical failure		None. Valve FCV-72-22 will isolate RWST.	None.	
26.	Check VA 72-507	Isolate RWST during recirc. mode	Valve stuck open	Mechanical failure		None. Valve FCV-72-21 will isolate RWST.	None.	

Table 6.2.2-3 FAILURE MODES AND EFFECTS ANALYSIS
(Page 7 of 8)

ITEM NO.	COMPONENT	FUNCTION	FAILURE MODE	POTENTIAL CAUSE	METHOD OF DETECTION	EFFECTS ON SYSTEM	EFFECT ON PLANT	REMARKS
	PASSIVE							
27.	Containment Spray Heat Exch. A	Cools CS water during recirc. mode	Clogging/ tube rupture	Impurities, particulate matter	High CS water Temp. indication via ICS point T0168A	Diminished heat transfer capability in Train A	None. Two 100% capacity trains including heat exchangers are provided.	Only one train is required to mitigate accident consequences.
28.	Containment Spray Heat Exch. B	Cools CS water during recirc. mode	Clogging/ tube rupture	Impurities, particulate matter	High CS water Temp. indication via ICS point T0169A.	Diminished heat transfer capability in Train B	None. Two 100% capacity trains including heat exchangers are provided.	Only one train is required to mitigate accident consequences.
29.	Spray nozzles	Spray water in the containment	Clogged	Impurities, particulate matter.	Reduced pump flow	263 nozzles provided per CSS train. Will diminish cooling capacity slightly.	Redundant trains are provided to fulfill minimum plant requirements.	Nozzles are 3/8 inch diameter and Containment Sump strainer perforation size is 0.085 inch, so possibility of clogging is remote.
30.	Piping or valve body or pump casing or HX, shell		Ruptures or major leakage		In service Inspection	System capability diminished.	None. Two 100% capacity trains are provided.	Only one train is required to mitigate accident consequences.

Table 6.2.2-3 FAILURE MODES AND EFFECTS ANALYSIS
(Page 8 of 8)

ITEM NO.	COMPONENT	FUNCTION	FAILURE MODE	POTENTIAL CAUSE	METHOD OF DETECTION	EFFECTS ON SYSTEM	EFFECT ON PLANT	REMARKS
31.	All valves required for system operation		Disc separated from stem	Mechanical failure		System capability diminished	None. Two 100% capacity trains are provided.	

THIS PAGE INTENTIONALLY LEFT BLANK

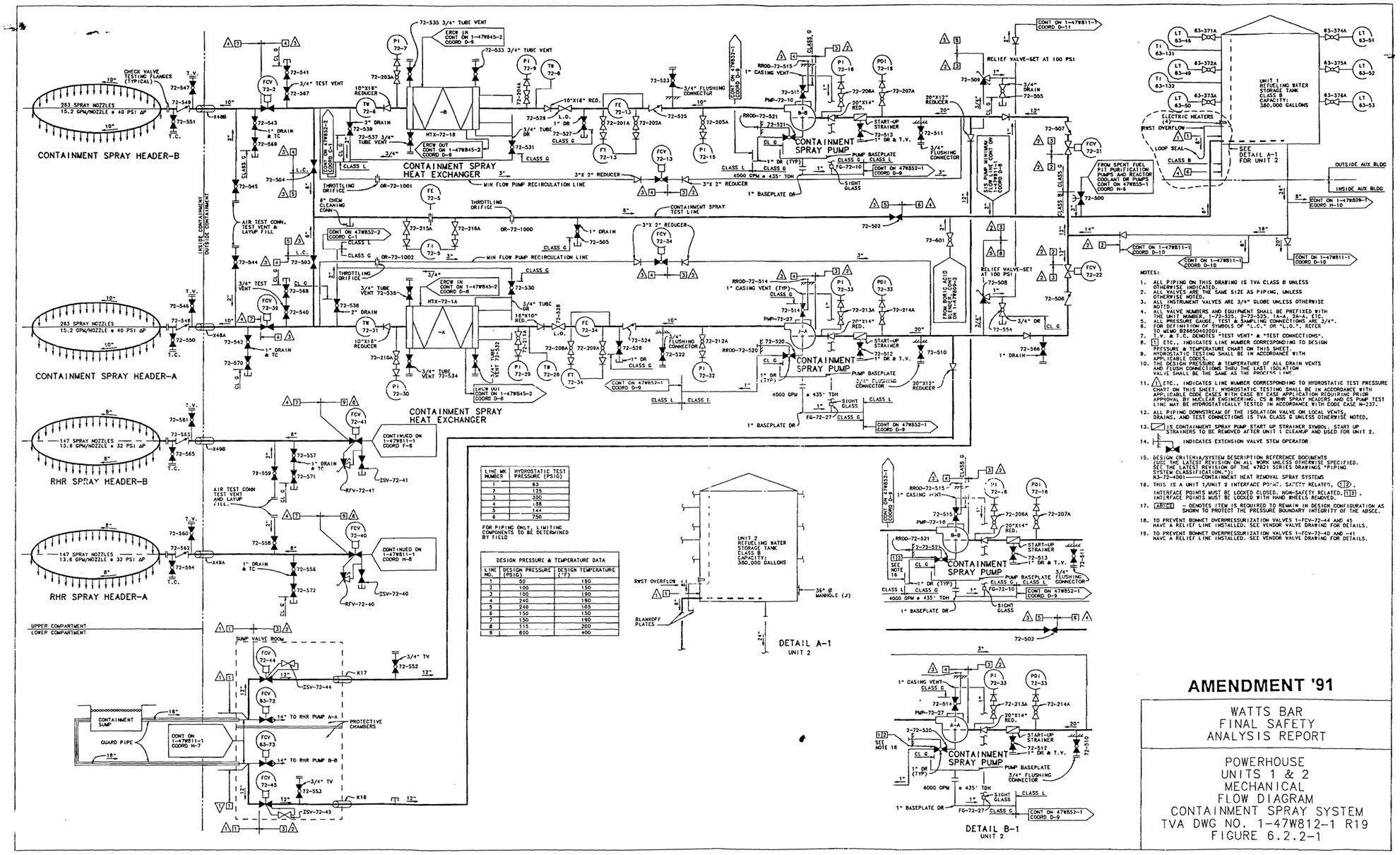

LINE MK NUMBER	HYDROSTATIC TEST PRESSURE (PSIG)
1	63
2	135
3	300
4	138
5	144
6	750

FOR PIPING ONLY. LIMITING COMPONENTS TO BE DETERMINED BY FIELD

DESIGN PRESSURE & TEMPERATURE DATA

LINE NO.	DESIGN PRESSURE (PSIG)	DESIGN TEMPERATURE (°F)
1	50	190
2	100	150
3	100	190
4	240	190
5	240	105
6	150	150
7	150	190
8	115	200
9	600	400

Figure 6.2.2-1 Powerhouse Units 1 & 2 Mechanical Flow Diagram Containment Spray System

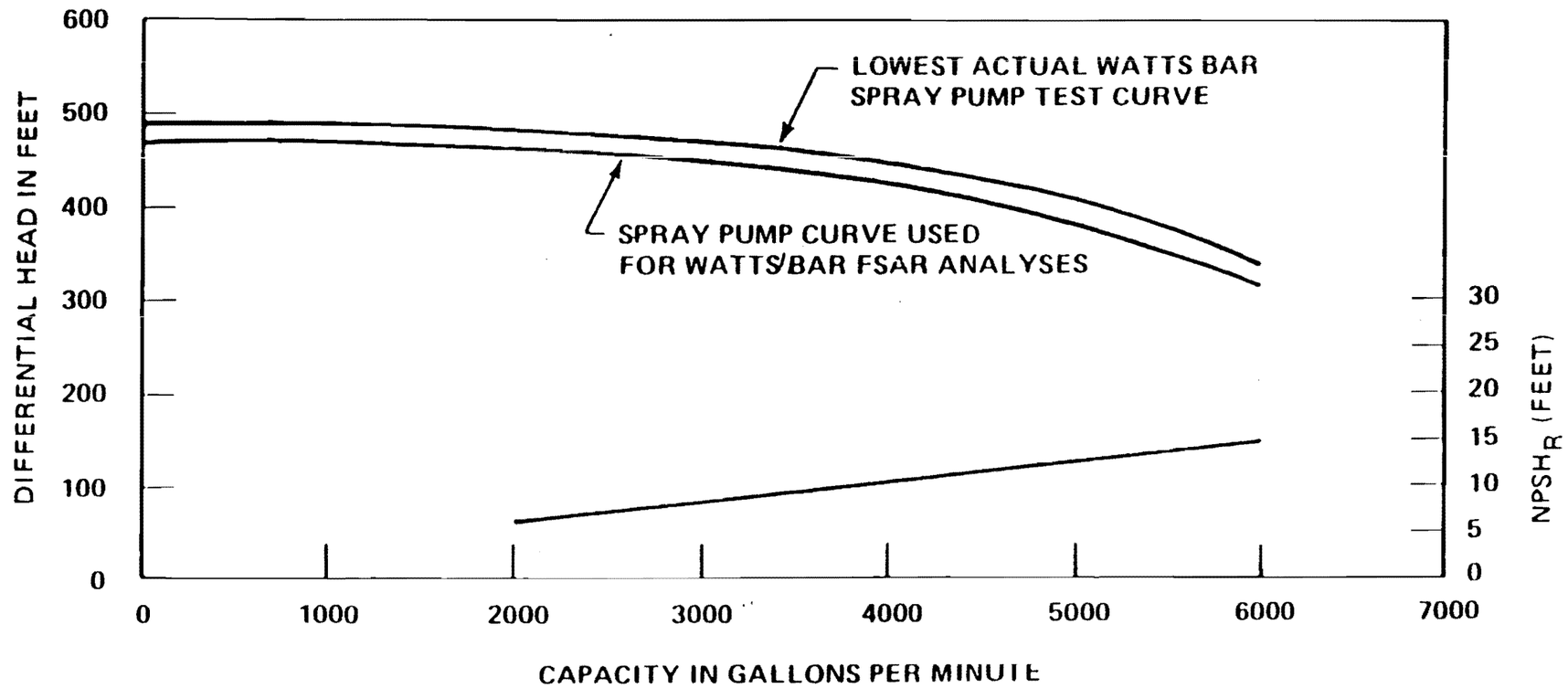

Figure 6.2.2-2 Containment Spray Pump Performance Curves

Revised by Amendment 52

17763-1

Figure 6.2.2-2 Containment Spray Pump Performance Curves

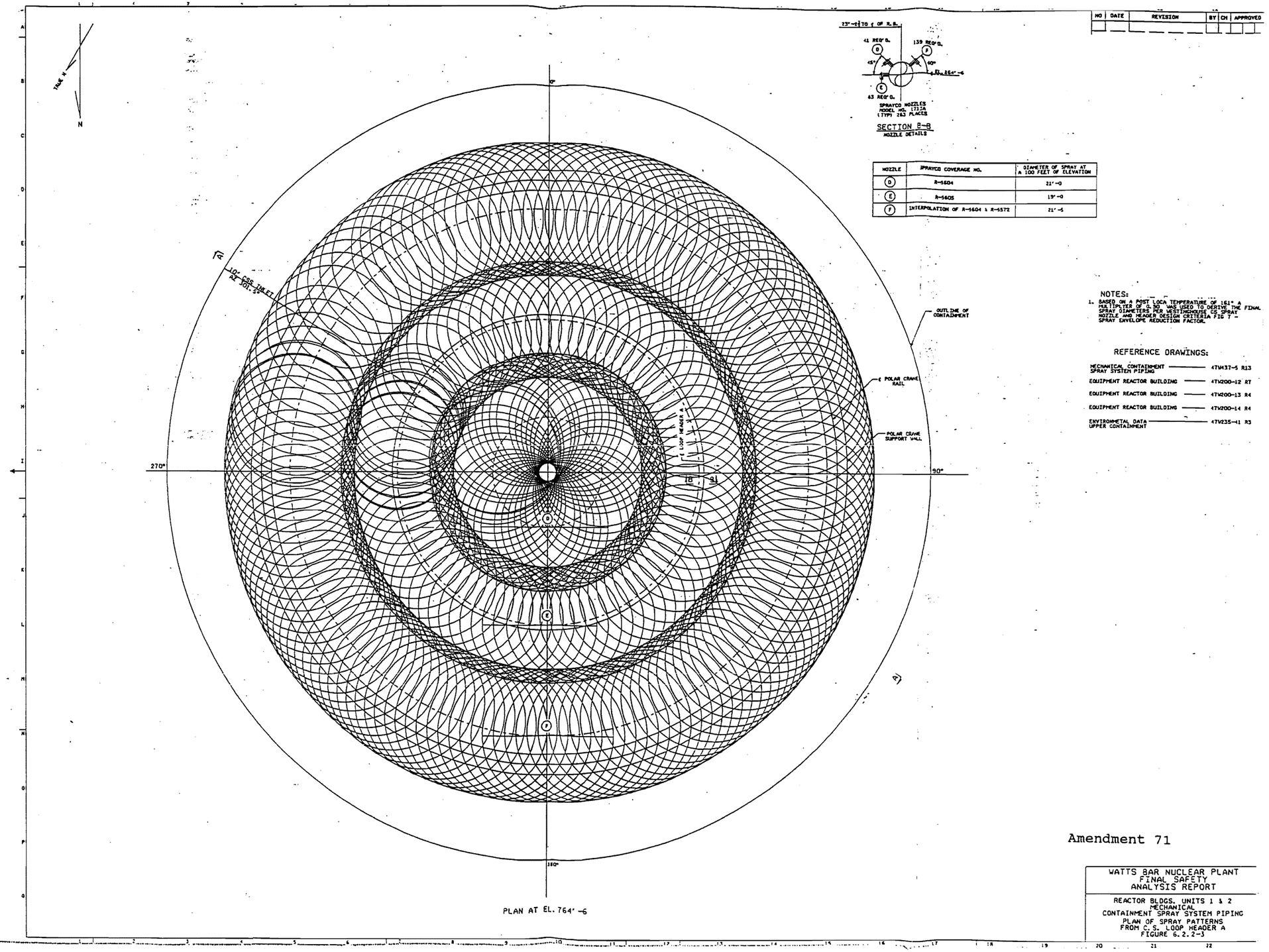

NOZZLE	SPRAYCO COVERAGE NO.	DIAMETER OF SPRAY AT A 100 FEET OF ELEVATION
D	R-5604	21'-0
E	R-5605	19'-9
F	INTERPOLATION OF R-5604 & R-5572	21'-5

Figure 6.2.2-3 Reactor Bldgs. Units 1 & 2 Mechanical Containment Spray System Piping Plan of Spray Patterns From C.S. Loop Header A

Security-Related Information - Withheld Under 10CFR2.390

Figure 6.2.2-4 Powerhouse-Auxiliary & Reactor Bldgs Units 1 & 2
Mechanical Containment Spray System Piping

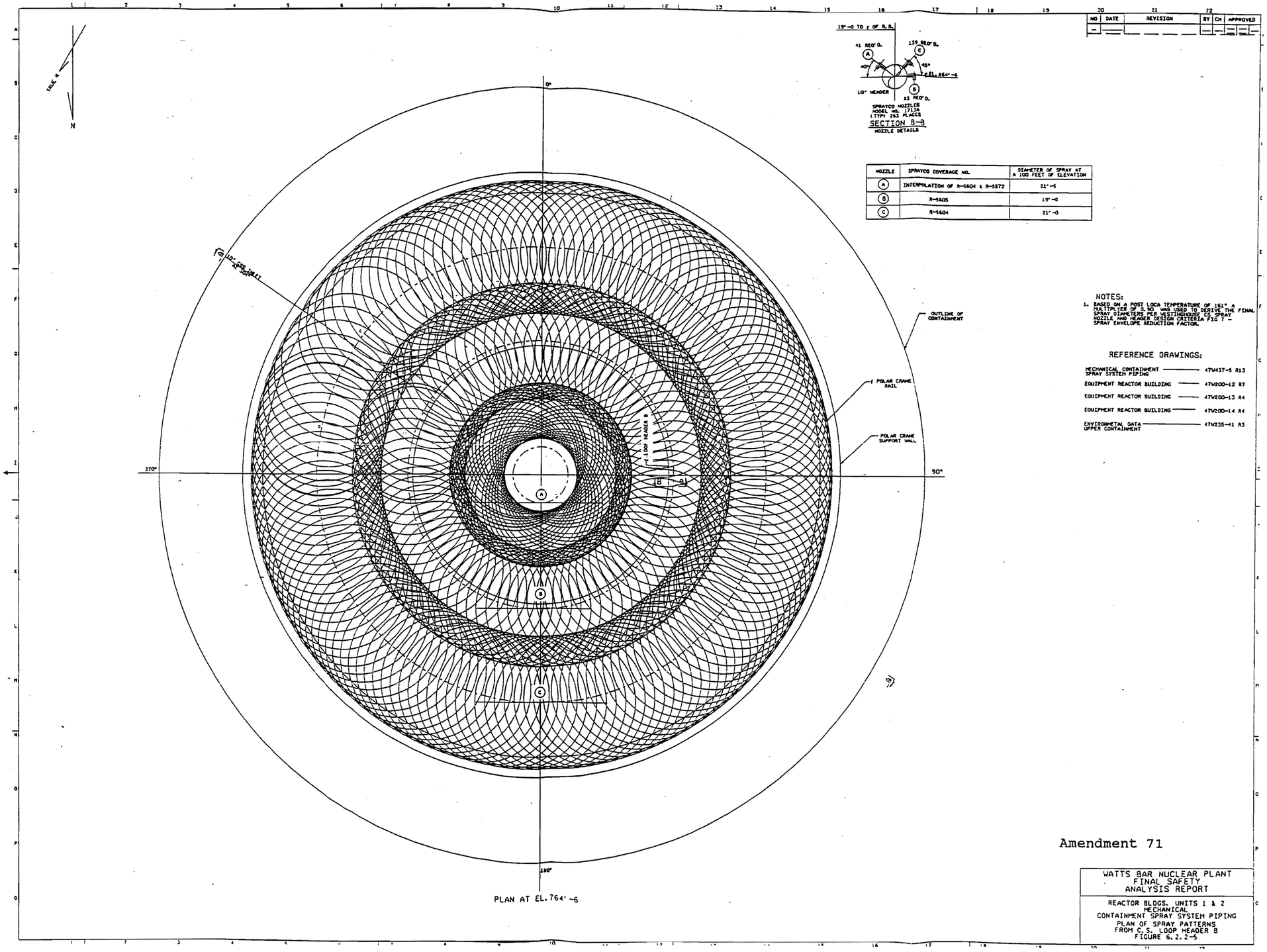

Figure 6.2.2-5 Reactor Bldgs. Units 1 & 2 Mechanical Containment Spray System Piping Plan of Spray Patterns From C.S. Loop Header B

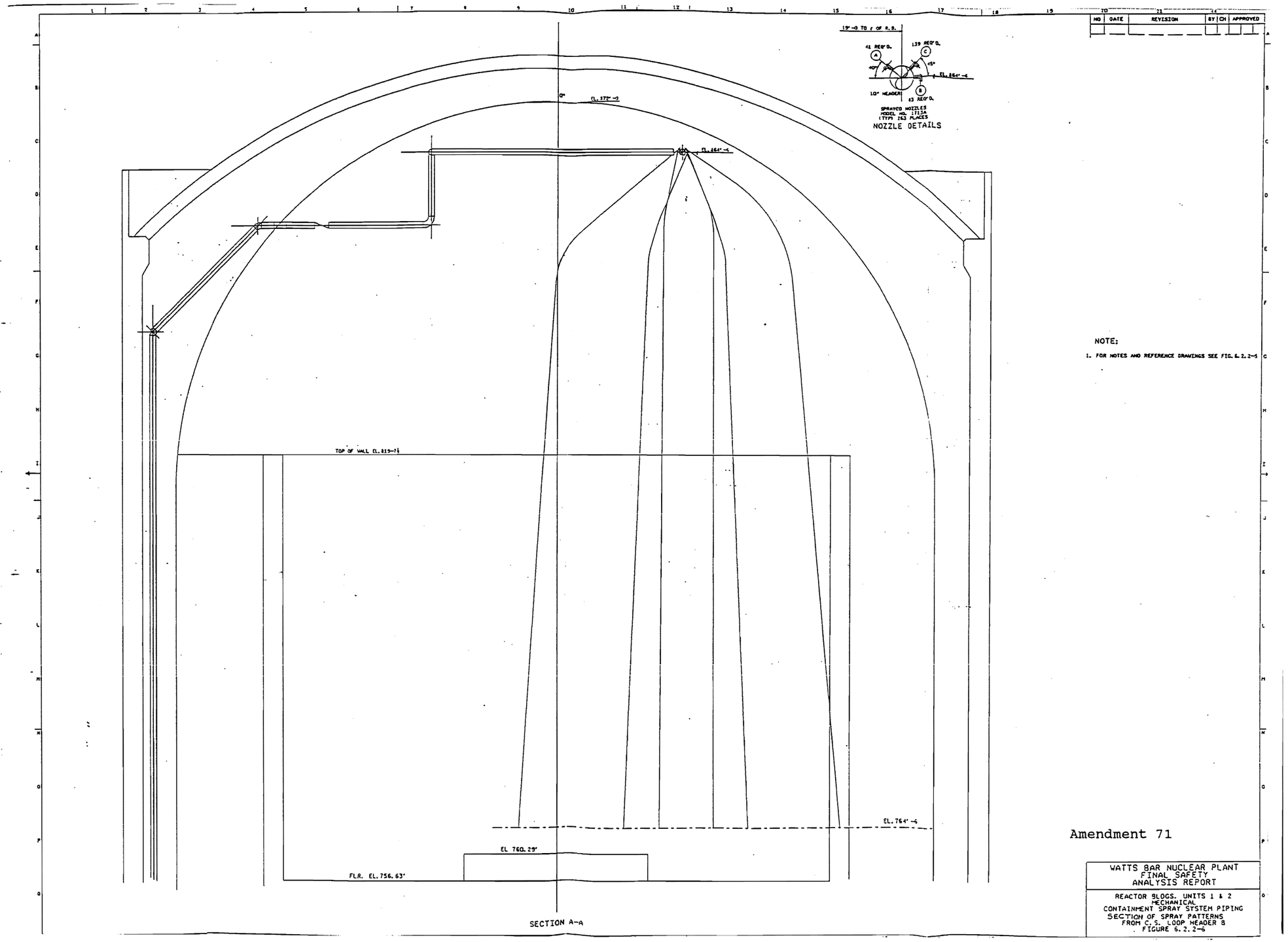

Amendment 71

Figure 6.2.2-6 Reactor Bldgs. Units 1 & 2 Mechanical Containment Spray System Piping Section of Spray Patterns From C.S. Loop Header B

6.2.3 Secondary Containment Functional Design

Structures included as part of the secondary containment system are the Shield Building of each reactor unit, the Auxiliary Building, the Condensate Demineralizer Waste Evaporator (CDWE) Building and the essential raw cooling water (ERCW) pipe tunnels adjacent to the Auxiliary Building. Depending on the configuration of the plant, the Primary Containment Building(s) may also be included as a structure which is part of the secondary containment system. This condition exists when the primary containment is open to the Auxiliary Building. The emergency gas treatment system (EGTS) is provided for ventilation control and cleanup of the atmosphere inside the annulus between the Shield Building and the Primary Containment Building. The Reactor Building purge air system is also available for cleaning up the atmosphere inside the Shield Building Annulus. Refer to Section 9.4.6 for further details relating to the purge air system. The Auxiliary Building Gas Treatment System (ABGTS) provides a similar contamination control capability in the Auxiliary Building Secondary Containment Enclosure (ABSCE),which includes all of the areas listed above.

6.2.3.1 Design Bases

6.2.3.1.1 Secondary Containment Enclosures

Design bases for the secondary containment structures were devised to assure that an effective barrier exists for airborne fission products that may leak from the primary containment, or the Auxiliary Building fuel handling area, during a loss-of-coolant accident (LOCA), or a fuel handling accident (FHA). Within the scope of these design bases are requirements that influence the size, structural integrity, and leak tightness of the secondary containment enclosure. Specifically, these include a capability to: (a) maintain an effective barrier for gases and vapors that may leak from the primary containment during all normal and abnormal events; (b) delay the release of any gases and vapors that may leak from the primary containment during accidents; (c) allow gases and vapors that may leak through the primary containment during accidents to flow into the contained air volume within the secondary containment where they are diluted, held up, and purified prior to being released to the environs; (d) bleed to the secondary containment each air-filled containment penetration enclosure which extends beyond the Shield Building and which is formed by automatically actuated isolation valves; (e) maintain an effective barrier for airborne radioactive contaminants, gases, and vapors originating in the ABSCE during normal and abnormal events.

Refer to Sections 3.8.1 and 3.8.4 for further details relating to the design of the Shield Building and the Auxiliary Building.

6.2.3.1.2 Emergency Gas Treatment System (EGTS)

The design bases for the EGTS are:

(1) To keep the air pressure within each Shield Building annulus below atmospheric pressure at all times in which the integrity of that particular containment is required.

(2) To reduce the concentration of radioactive nuclides in annulus air that is released to the environs during a LOCA in either reactor unit to levels sufficiently low to keep the site boundary and low population zone (LPZ) dose rates below the 10 CFR 100 values.

(3) To withstand the safe shutdown earthquake.

(4) To provide for initial and periodic testing of the system capability to function as designed.

6.2.3.1.3 Auxiliary Building Gas Treatment System (ABGTS)

The design bases for the ABGTS are:

(1) To establish and keep an air pressure that is below atmospheric within the portion of the buildings serving as a secondary containment enclosure during accidents.

(2) To reduce the concentration of radioactive nuclides in air releases from the secondary containment enclosures to the environs during accidents to levels sufficiently low to keep the site boundary and LPZ dose rates below the 10 CFR 100 guideline values.

(3) To minimize the spreading of airborne radioactivity within the Auxiliary Building following an accidental release in the fuel handling and waste packaging areas.

(4) To withstand the safe shutdown earthquake.

(5) To provide for initial and periodic testing of the system capability to function as designed (See Chapter 14.0 for information on initial testing of systems).

6.2.3.2 System Design

6.2.3.2.1 Secondary Containment Enclosures

(1) Shield Building

The principal components that function collectively to form a secondary containment barrier around the steel primary containment vessel are the Shield Building itself, the Shield Building penetration seals, the isolation valves installed in the penetrations to the Shield Building, and the Shield Building penetration leakoff facilities.

Structure

The Shield Building is a reinforced concrete structure that encloses the reactor's steel primary containment structure; it has a circular horizontal cross section and a shallow domed roof. The vertical center line of this building is also the vertical center line of the steel primary containment vessel. The

inside diameter of this building was sized to provide an annular shaped air space between the two reactor enclosures that is approximately five feet wide. The total enclosed free air space between the two enclosures is approximately 396,000 cubic feet.

Penetrations

To ensure that the Shield Building provides a nearly leak tight enclosure for the primary containment structure all openings in the shield building penetrations are sealed. Typical mechanical piping or ventilation penetrations are equipped with a flexible membrane seal as shown in Figure 6.2.3-1. Mechanical penetrations are designed for a leakage rate no greater than 0.0052 cfm per square inch when secondary containment is at a minus 0.5 inch water gauge. The primary containment personnel hatch passes through the Shield Building and opens directly to the Auxiliary Building. This opening in the Shield Building wall is handled as an ordinary piping penetration and is provided with a flexible, double membrane seal as shown in Figure 3.8.2-5 (see Section 3.8.2). Personnel and equipment access doors to the secondary containment are treated as special cases and are provided with resilient seals as shown in Figures 3.8.4-21 through 3.8.4-23. (See Section 3.8.4 for descriptions of the personnel access doors and the equipment access doors.) The allowable leakage for each personnel access door is 0.5 cfm when secondary containment is at minus 1 inch water gauge, and 10 cfm for the equipment access hatch when secondary containment is at minus 0.75 inch water gauge.

Air filled lines which must be isolated by automatic valve actuation and which penetrate both the primary containment and the shield building are considered more likely to pass airborne radioactivities than other lines. Therefore these lines are provided with a third isolation valve outside the secondary containment for additional leak protection. This single, third valve receives both Train A and B actuation signals. Buffering prevents an electrical failure in one train from affecting the performance of the other train. To enhance the effectiveness of the third isolation valve as a barrier to leakage, the enclosed volume between the second and third isolation valves is opened to the annulus at all times. Opening this enclosed space to the annulus is accomplished with leakoff facilities as shown in Figure 6.2.3-2. This allows the negative pressure in the annulus to include this small volume, and leakage from the primary containment outward or leakage from outside the Shield Building inward to be drawn into the annulus for processing. The lines provided with this feature are those for the primary containment purge supply and exhaust. The 8-inch lower compartment pressure relief line is excluded from this consideration since it terminates in the annulus through a filter train and does not go outside the Shield Building.

Electrical penetrations are of either a cable tray/cable slot type or a conduit type. Typical seals for these penetrations are shown in Figure 6.2.3-3. For cable tray/cable slot penetrations, silicone room temperature vulcanizing

(RTV) foam is used as the sealant around cables within the wall opening over a portion of the length of the cable slot penetration. In conduit penetrations, the interstitial spaces between cables and conduit or condulet walls are filled with RTV silicone rubber as the sealant over a portion of the length of the penetration. Electrical penetrations are designed for a leakage rate not greater than 0.014 cfm per square inch when secondary containment is at a minus 0.5 inch water gauge.

The total expected infiltration rate across all leakage paths into the annulus is 250 cfm at the post accident annulus control setpoint for a postulated single failure of one EGTS train (see Section 6.2.3.3.2 for a discussion of infiltration rate associated with a postulated single failure of one pressure control train). During normal operation the annulus pressure is maintained at or more negative than 5.0 inches water gauge with respect to the outside atmosphere. Periodic tests demonstrate that inleakage is less than this value.

The fraction of primary containment leakage which may bypass the Shield Building and go directly to the Auxiliary Building is specified to be no greater than 25% of the total primary containment out-leakage. Permitting this leakage fraction results in acceptable site boundary and LPZ doses for the LOCA condition as described in Chapter 15. There are no significant paths by which primary containment leakage may bypass both the Shield Building and the Auxiliary Building and result in exceeding the offsite dose limits.

Information concerning isolation features utilized in support of the secondary containment is presented in Section 6.2.4. Potential leakage paths by which primary containment leakage could bypass the secondary containment, and measures utilized to prevent such leakage are also discussed in Section 6.2.4.

(2) Auxiliary Building

Structure

The Auxiliary Building provides an isolation barrier during certain postulated accidents involving airborne radioactive contamination. Certain of the buildings interior and exterior walls, floor slabs, and a part of its roof form the isolation barrier as shown in Figures 6.2.3-4 through 6.2.3-10. The enclosed volume of this isolation barrier, the ABSCE, is approximately 6.9×10^6 cubic feet. The ABSCE is discussed in more detail in Section 3 below. Additional data on the Auxiliary Building is provided in Section 3.8.4 and Table 6.2.3-1.

(3) Auxiliary Building Secondary Containment Enclosure (ABSCE)

The Auxiliary Building secondary containment enclosure (ABSCE) is that portion of the Auxiliary Building and CDWE Building (and for certain configurations, the annulus and primary containment, as discussed below) which serves to maintain an effective barrier for airborne radioactive contaminants released in the auxiliary building during abnormal events. Mechanical and electrical penetrations of this enclosure are provided with seals to minimize infiltration. Piping penetrations are either analyzed to pressure boundary retention requirements, or the effects of their failure are demonstrated not to impair the ability of the ABGTS system to maintain the ABSCE under the required negative pressure of 0.25 inches w.g., or they are isolated by physical means (e.g., locked-closed valves, etc.) Airlock-type doors are provided at portals where needed by the frequency of use. The negative pressure is maintained within the ABSCE to ensure that no contaminated air is released to the environs following an abnormal event without first being processed by the ABGTS. The ABSCE is shown in Figures 6.2.3-4 though 6.2.3-9.

Entrances and exits to those portions of the Auxiliary Building within the primary containment barrier for both equipment and personnel are through air locks. The air lock locations are shown in Figures 1.2-3 and 1.2-5. The doors in each air lock are electrically interlocked such that only one side of the air lock can be opened at a time. A control room alarm is provided should both sides of an air lock ever be opened simultaneously. As a safety precaution, an interlock defeat switch is mounted on the containment side of each air lock to allow emergency egress should either side of the air lock be blocked open in an accident.

A special case is the interlock system for the large exterior door to the railway loading area. When the large railroad access door is open, ABSCE airlock doors, such as the doors to the Post Accident Sampling Facility (PASF) and nitrogen storage area nor the access hatches above can be opened, and when either of these two doors and either of the access hatches above are open, the large railway access door cannot be opened. Administrative controls are provided to control doors and hatches during normal operation. The railway access doors and hatches are described in Section 3.8.4.

The total permissible leakage rate for the ABSCE at a pressure of -0.25 inches water gauge with respect to the outside is 9900 cfm maximum. This represents 165.5% of the ABSCE free volume per day. Periodic tests demonstrate that inleakage is less than the design value. Any improvement in the inleakage recorded during subsequent tests shall be used to establish the allowable margin for breaching permits.

During periods when the primary containment and/or annulus of both units are open to the Auxiliary Building, the ABSCE also includes these areas. During fuel handling operations in this configuration, a high radiation signal

from spent fuel pool radiation monitors will result in a Containment Ventilation Isolation (CVI) in addition to an Auxiliary Building isolation and ABGTS start. Similarly, a CVI signal, including a CVI signal generated by a high radiation signal from the containment purge air exhaust radiation monitors, will initiate an Auxiliary Building isolation and start of ABGTS. These actions will ensure proper operation of the ABSCE. Both doors of the containment vessel personnel airlocks may be open at the same time during refueling activities while the purge air ventilation system is operating. Under special administrative controls, one of the airlock doors at each location will be closed and the purge air ventilation systems will be shutdown and isolated in a timely manner subsequent to a fuel handling accident to ensure ABSCE boundary integrity. The Unit 2 primary containment and annulus are open to the ABSCE with the Unit 2 containment purge system physically isolated from the outside environment by means of locked-closed isolation dampers and valves.

Doors and penetrations of the ABSCE perimeter are provided with seals to reduce infiltration. Doors and hatches entering the area are either locked or under administrative control.

Automatic redundant isolation dampers are provided in ducts which pass from areas inside the ABSCE to areas outside of the enclosure. These permit isolation of the ABSCE and allow the ABGTS to maintain a negative pressure in the area following an abnormal event.

The ABGTS maintains a negative pressure with respect to the outside in the ABSCE during emergency operation and processes the Auxiliary Building exhaust. Either train of the ABGTS may be used to maintain the negative pressure and treat air exhausted from the ABSCE.

The annulus vacuum control subsystem continues to operate whenever the ABSCE is isolated, except for a Phase A containment isolation signal. A Phase A containment isolation signal which is generated by a LOCA starts the air cleanup subsystem of the emergency gas treatment system. Calculations have shown that this condition does not result in exceeding the limits given in 10 CFR 100. For additional description of the annulus vacuum control subsystem of the EGTS, see Section 6.2.3.2.2.

Proper actuation of the isolation dampers associated with the ABSCE and operation of the ABGTS is confirmed periodically.

6.2.3.2.2 Emergency Gas Treatment System (EGTS)

The EGTS is shown schematically in Figure 6.2.3-11. The logic and control diagrams for this system are shown in Figures 6.2.3-12 to 6.2.3-15A. This system has two subsystems: the annulus vacuum control subsystem and the air cleanup subsystem. The portions of the EGTS necessary to ensure that the system performs its functions during post-accident operation are classified Seismic Category I. Portions of the system which are not necessary for post-accident operation are seismically qualified

to the extent that the system does not adversely affect any safety-related system(s)/component(s) as a result of its failure due to the seismic event; that is qualified Seismic Category I(L).

Annulus Vacuum Control Subsystem

The annulus vacuum control subsystem is a fan and duct network used to establish and keep a negative pressure level within the annular space between the primary and secondary containment structures. It is utilized during normal operations in which containment integrity is required. In emergencies in which containment isolation is required, this subsystem is isolated and shut down. This subsystem performs no safety-related function. Because of this, the annulus vacuum control subsystem is not classified as an engineered safety feature.

This subsystem has two independently controlled branches. Each branch serves one reactor unit. These branches draw air from their assigned annuli and release it into the Auxiliary Building Fuel Handling Area exhaust duct system. The air inlet for each branch is centrally located in its respective secondary containment volume above the steel containment dome. The Unit 2 annulus vacuum control subsystem is isolated by means of fail-closed isolation dampers located in the common portions of ductwork to ensure the independent operation of branch serving the Unit 1 annulus.

Air pressure control in each secondary containment annulus is achieved with one of the two, 100% capacity redundant fans, a differential pressure sensor, motor operated damper and control circuitry installation incorporated into each branch. This equipment provides a capability to vary the volumetric flow rate drawn from the annulus to keep the pressure at a predetermined negative pressure level. This control function is accomplished with a modulating damper under control of a differential pressure sensor that adjusts the amount of outside air introduced upstream of a constant capacity fan in the proper manner to keep the annulus pressure within a designated narrow range. One of the two redundant units starts automatically in the event the operating control unit fails to function in the proper manner.

The fans and flow control dampers serving the reactor secondary containment annulus are installed in the EGTS room at Elevation 757.0' adjacent to the Unit 2 Shield Building.

The nominal negative pressure for the annulus vacuum control equipment installation is 5 inches of water gauge. The controller setpoint is established such that the annulus pressure is maintained at, or more negative than, 5 inches water gauge. This negative pressure level chosen for normal operation ensures that the annulus pressure will not reach positive values during the annulus pressure surge produced by a LOCA in the primary containment. Two 100% capacity fans are utilized to maintain this negative pressure. One fan is normally on standby.

Annulus vacuum control subsystem aids in containment pressure relief by exhausting the containment vent air after it goes through the containment vent air clean up units and is discharged into the annulus then into the Auxiliary Building exhaust stack (See Section 9.4.6).

Air Cleanup Subsystem

The air cleanup subsystem is a redundant, shared airflow network having the capability to perform two functions for the affected reactor secondary containment during a LOCA. One of these is to keep the secondary containment annulus air volume below atmospheric pressure. The second function is to remove airborne particulates and vapors that may contain radioactive nuclides from air drawn from the annulus. Each of these is accomplished by this subsystem without disturbing operation of the unaffected reactor unit.

Both of these functions are performed by processing and controlling a stream of air taken from the reactor unit secondary containment annulus. The air cleanup operation is conducted by drawing the air stream through a series of filters and adsorbers. Annulus air pressure control is accomplished by adjusting the fraction of the airstream that is returned to the annulus air space. The EGTS ductwork which is connected to the Unit 2 annulus is isolated from the air cleanup units by means of locked-closed isolation valves and two fail-closed isolation dampers.

The negative pressure control setpoint chosen for post-accident operation is low enough that leakage across the boundary is into the annulus from both the primary containment and areas adjacent to the Shield Building. The pressure differentials produced by wind effects are also overcome by appropriate selection of the annulus negative pressure level.

The rated capacity of each redundant air cleanup unit in the subsystem is 4000 cfm. This subsystem of the EGTS is classified as an engineered safety feature.

The air flow network for the air cleanup subsystem was designed to provide the redundant services needed for either reactor secondary containment annulus. The suction-side ductwork in this network which is used to bring annulus air to the EGTS room on Elevation 757.0' in the Auxiliary Building is also used by the annulus vacuum control subsystem. The intake is centrally located within the Shield Building above the steel containment dome. Within the EGTS room the network branches out in a manner to supply two air cleanup unit installations that can be aligned with flow control dampers to serve either annulus air volume. After the air is processed through the air cleanup subsystem, it is routed to the redundant damper controlled flow dividers in the annulus. Inside each annulus, the air flow network contains two air flow paths: one leading to the Shield Building vent and the other to a manifold that distributes and releases the air uniformly around the bottom of the annulus.

The vertical separation between the intake above the dome and the exhaust ports in the manifold is approximately 168 feet. Butterfly valves, rather than dampers, are installed in the ducts just above the flow distribution manifold to minimize the outside air inleakage from the reactor unit vents into the annulus.

Another feature incorporated into the air cleanup subsystem air flow network is the capability to cool the filters and adsorbers in an inactive air cleanup unit that is loaded with radioactive material. This is accomplished with two cross-over flow ducts that can draw air at a minumum of 200 cfm from the active air cleanup unit through the inactive

air cleanup unit. (Such an air flow is sufficient to keep the temperature rise through a fully loaded inactive air cleanup unit to less than 75°F.) Two butterfly valves in series are installed in each cross-over air flow path to assure sufficient isolation to perform accurate removal efficiency tests on the HEPA filter and carbon absorber banks. This feature is provided in the event excessive adsorber bed temperature occurs following the failure of an operating EGTS train. Adsorber bed temperature is indicated and supplied to the plant process computer. Status indication of each EGTS train is also provided. Upon failure of an operating EGTS train, adsorber bed temperature is monitored to detect subsequent temperature rise. After a Phase A containment isolation signal has initiated EGTS operation, the control room operator will shut one of the two EGTS trains down and align the appropriate butterfly valves for automatic operation. In addition, the associated suction valve is remotely opened from the main control room to establish a flow path from the annulus through the air cleanup unit.

The two air cleanup units in the air cleanup subsystem have stainless steel housings containing air treatment equipment, sampling ports, heaters, drains, test fittings, and access facilities for maintenance. See Section 6.5.1.2.1 for a description of the air cleanup units and information related to their design.

A centrifugal fan is provided outside each air cleanup unit housing. These fans were designed to function in process air flow streams at temperatures up to 200°F. See Table 6.2.3-1 for additional information on these fans.

Two air flow control modules are also included in the air cleanup subsystem. Each consists of a differential pressure sensor and transmitter, control circuitry, a damper actuator, and two modulating dampers. The single damper actuator adjusts the dampers simultaneously in opposite directions, i.e., one is closed as the other is opened.

A pressure control system with a station located in the main control room modulates pressure control dampers in the annulus to maintain the differential pressure setpoint. Two sets of independent pressure control dampers installed in the secondary containment annulus provide the capability to adjust the amount of air recirculated to the reactor unit annulus or discharged to the shield building exhaust vent. Annulus pressures that are more positive than the pressure controller setpoint produce a signal causing the damper actuator to begin closing the damper controlling the air flow to the annulus and to start opening the damper controlling the air flow to the Shield Building exhaust vent. Annulus pressures that are more negative than the pressure controller setpoint initiate the opposite kind of damper motions.

Four isolation valves (two valves per train) installed in the secondary containment annulus provide isolation of the pressure control dampers. Each train has a handswitch in the control room positioned so that both trains of isolation valves are in A-AUTO . A containment isolation Phase A signal causes the valves to open. The open isolation valves provide a flow path for both trains of pressure control dampers which modulate to control annulus pressure. For further details, see Figures 6.2.3-14 and 6.2.3-15.

Operation of the air cleanup subsystem during accidents is initiated by the Phase A containment isolation signal. Both the A and the B trains start and damper alignment initiated by this signal. A capability is also provided to start each fan with a hand switch in the main control room. Damper alignment is also initiated by the same signal. Another adjustment of hand switches in the main control room changes the operating mode to the single train operation with the redundant fan in a standby status. Employment of this operating mode is required after 1 hour and before 2 hours of operation. The control room operator can select either train to remain in operation.

6.2.3.2.3 Auxiliary Building Gas Treatment System (ABGTS)

The ABGTS is a fully redundant air cleanup network provided to reduce radioactive nuclide releases from the secondary containment enclosure during accidents. It does this by drawing air from the fuel handling and waste packaging areas through ducting normally used for ventilation purposes to air cleanup equipment, and then directing this air to the reactor unit vent. In doing so, this system draws air from all parts of the ABSCE to establish a negative pressure region in which virtually no unprocessed air passes from this secondary containment enclosure to the atmosphere.

During periods when the primary containment and/or annulus of both units are open to the Auxiliary Building, the ABSCE also includes these areas. The ABGTS has been designed to establish a negative pressure in these additional areas for this configuration. During fuel handling operations in this configuration, a high radiation signal from the spent fuel pool radiation monitors will result in a Containment Ventilation Isolation (CVI) in addition to an Auxiliary Building isolation and ABGTS start. Similarly, a CVI signal, including a CVI signal generated by a high radiation signal from the containment purge air exhaust radiation monitors, will initiate an Auxiliary Building isolation and start of ABGTS. These actions will ensure proper operation of the ABSCE. However, as an added precaution to protect the ABGTS operational boundary, operational action is needed to ensure the closure of the containment purge exhaust isolation valves which are controlled by hand switches.

The portions of the ABGTS that are required to ensure that the system functions properly are classified Seismic Category I. Certain portions of the system, which are not required for post-accident operation of the ABGTS, are seismically qualified to the extent that system operation is not adversely affected should they fail due to the seismic event (i.e., classified according to Seismic Category I(L)).

The rated capacity of each redundant ABGTS air cleanup unit (ACU) is 9000 cfm. These ACUs were designed in accordance with engineered safety feature standards.

The unique portions of the ABGTS are shown schematically in Figures 6.2.3-16 and 9.4-8. Logic and control diagrams for the ABGTS are shown in Figures 9.4-10 and 9.4-17. The airflow network for this system consists of the exhaust ductwork, which normally serves the fuel handling and waste packaging areas connected to the suction-side of the Train A ACU, and a cross-over duct which connects the ductwork with the suction-side of the Train B ACU. The discharges from the Train A and Train B ABGTS exhaust fans separately go to the Unit 1 and Unit 2 Shield Building exhaust vents, respectively.

The air flow ductwork that is not unique to this system consists of some of the normal ventilation ducting installed in the ABSCE. When the ABSCE is isolated, this duct network provides a flow path for the ABGTS to draw down and maintains a negative pressure in ABSCE. In some instances, air is drawn in the opposite direction to the normal air flow pattern during operation of the ABGTS. Each ACU includes air treatment components, instrumentation, test fittings, and other equipment required for proper operations and testing of the system. Refer to Section 6.5.1.2.2 for a description of the ABGTS air cleanup units and information related to their design. Information on these fans is given in Table 6.2.3-1.

The air flow control modules utilized in the ABGTS contain a differential pressure sensor and transmitter, control circuitry, and a modulating damper. These air flow control modules provide the capability for keeping the pressure within the ABSCE at a minimum of 1/4 inch water gauge below atmospheric with the differential pressure transmitter and differential pressure controller circuit adjusting the amount of outside air admitted into the duct network by the vacuum relief line. Such action brings in sufficient outside air to keep the fan flow rate at its rated flow at all times.

The negative pressure level chosen for post-accident operation is sufficiently low to ensure that airborne contamination present in the Auxiliary Building is not released to the environs without being processed by an air cleanup assembly. External pressure gradients produced by outside temperature and wind loadings on the building do not adversely affect the ability of the ABGTS to maintain the negative pressure in the ABSCE.

The controls for the ABGTS are designed to provide two basic control modes. One control mode has either one of the air cleanup units in operation and the other in a state in which the redundant unit can automatically come into operation in the event the operating unit fails. Less negative than adequate pressure in the ABSCE is utilized in this control mode to make this failure determination. This operational redundancy is achieved with spatially separated power and control circuitry having different independent power sources to prevent a loss of function from any single system component failure. The term "Train A" is used to identify one complete set of full capacity equipment and the term "Train B" is used to identify the other set of full capacity equipment. Power for both equipment trains is supplied by the emergency power system.

Operation of the ABGTS begins automatically upon initiation of an high radiation signal from the spent fuel pool accident radiation monitors or an ABI signal which is generated from one of the following signals:

(1) Phase A containment isolation signal, or

(2) High temperature signal from the Unit 1 and Unit 2 Auxiliary Building air intakes.

Additionally, during refueling operations when containment and/or the annulus is open to the Auxiliary Building ABSCE spaces, a containment vent isolation signal will automatically start the ABGTS.

A capability is also provided to start each train with a hand switch (one hand switch per train) in the main control room. Another adjustment capability provided in the hand switches in the main control room changes the operating mode to the single train operation with the redundant train in a standby status. Employment of this operating mode is expected after the first 30 minutes of operation. In this instance, the main control room operator has the capability to select either train to remain in operation. The standby unit selected automatically starts in the event the operating unit does not adequately maintain negative pressure in the ABSCE.

6.2.3.3 Design Evaluation

6.2.3.3.1 Secondary Containment Enclosures

The secondary containment enclosures are designed to provide a positive barrier to all potential primary containment leakage pathways during a LOCA or a FHA inside containment and to radioactive contaminants released in accidental spills and fuel handling accidents that may occur in the ABSCE. In a LOCA or a FHA inside containment, the Shield Building containment enclosure provides the barrier to all airborne primary containment leakage, and the ABSCE provides a barrier to through-the-line leakage which can potentially become airborne. The ABSCE also maintains an effective barrier for airborne radioactive contaminants originating inside the ABSCE during normal and abnormal events.

(1) Shield Building

Structure

The Shield Building provides the physical barrier for airborne primary containment leakage during a LOCA or a FHA inside containment. Because the Shield Building completely encloses the free standing primary containment, most of the airborne leakage from primary containment passes into the annular region provided by this arrangement.

The building construction employs monolithic pours of concrete. This approach for structures of this type produces a very low leakage barrier. The low leakage characteristics of this barrier help to reduce the rate at which purified annulus air must be released to maintain the enclosed volume at a negative pressure. This factor contributes significantly to keeping the site boundary and the low population zone (LPZ) dosage levels within 10 CFR 100 guidelines.

The design of the EGTS system and the size of the annular region between the primary containment and the shield building assures a residence time for all leakage into the annulus.

Penetrations

The Shield Building wall is provided with many penetrations to accommodate mechanical equipment piping, cable trays, and electrical conduit which leave and enter the Shield Building. Due to the low leakage characteristics of the building,

leakage through the Shield Building wall is restricted almost entirely to openings in these penetrations. The design assures that penetration leakage does not exceed predetermined quantities. Such a capability ensures that the inleakage is sufficiently low to keep the dose contributions at the site boundary and to the LPZ within 10 CFR 100 guidelines.

Openings in mechanical piping penetrations are sealed principally as shown in Figure 6.2.3-1. The seals are a flexible membrane type of single gaskets which incorporate fire resistant materials and are designed to withstand the combinations of Shield Building and piping movements in the SSE and retain their functional integrity. In addition, seals at or below the probable maximum flood elevation are designed to be water tight for flood static head and surge forces. All seals, where possible, are installed outside the Shield Building such that whether during normal operation, accidents, or flood, the differential pressures will tend to enhance the tightness of the seal. The penetration seal materials have been selected to be compatible with the maximum design integrated dose for the Shield Building during a LOCA.

Cables routed in cable trays pass through the Shield Building wall through rectangular cable slot penetrations as shown in Figure 6.2.3-3. The sealant material installed around cables over a portion of the length of the cable slot is silicone RTV (room temperature vulcanizing) foam and is RTV silicone rubber installed around cables within conduits. The seals are typically shown in Figure 6.2.3-3 and are designed to withstand the SSE and retain their integrity. Electrical penetration seals are allowed twice the leakage of mechanical seals to provide sufficient margin in meeting the total allowable Shield Building leakage requirements.

The personnel and equipment access doors to the Shield Building are designed with heat resistant, resilient seals which reduce their leakage to the allowable values as stated in Section 6.2.3.2. These doors are designed to retain their structural integrity and leak tightness during a SSE as described in Sections 3.8.1 and 3.8.2.

To allow personnel access to the annulus during operation, the annulus personnel access doors form an airlock. The doors are electrically interlocked such that only one of the pair may be opened at a time, but an electric interlock defeat switch is provided inside the annulus to provide for emergency egress from the annulus should the door on the Auxiliary Building side of the lock be blocked open during an accident. Therefore, a continuous secondary containment barrier is provided while allowing personnel movement.

The fuel transfer tubes penetrate the primary and secondary containment on their way to the Auxiliary Building. Each transfer tube has a blind flange on the inboard side of primary containment, equipped with double seals and a pressure test connection between the seals. The valve in the Auxiliary Building end of the transfer tube serves as the secondary containment isolation valve. The inner space between the primary containment flange and the isolation valve is bled to

the annulus so that any leakage into the tube from primary containment or the Auxiliary Building flows into the annulus. The bleed line is routed above the maximum refueling pool water level to preclude accidental spills of refueling water.

(2) Auxiliary Building

Structure

The entire Auxiliary Building including walls, roof, and interior partitions is constructed by consecutive monolithic pours of concrete. This method of assembly produces a structure with very low leakage characteristics. The portions of the building chosen to constitute the isolation barrier were selected such that sources of potential contamination are completely enclosed. Therefore, the structure utilized to form the Auxiliary Building containment envelope functions effectively as a barrier to the environs. This same structure also helps to reduce inleakage into the Auxiliary Building containment envelope during accidents to levels easily accommodated by the ABGTS.

Penetrations

Seals for mechanical penetrations are a flexible membrane type or single gaskets. The seals are designed to withstand Auxiliary Building and piping movements in the SSE and retain their structural integrity. The materials chosen for the seals are fire resistant. The seals, where possible, are designed such that whether during normal operation or accidents, the differential pressures tend to enhance the tightness of the seal. Sealing methods for electrical penetrations are similar to those for the Shield Building electrical penetrations.

Each normal ventilation duct penetrating the ABSCE is equipped with two isolation dampers in series. The dampers have resilient blade end and blade edge seals which are designed to retain their functional characteristics. The motor operators for these dampers have been sized to tightly close the damper blades against their resilient seals. The damper and motor operator assemblies are designed to operate during and after the SSE.

Piping penetrations are analyzed to pressure boundary retention requirements. The effects of piping penetration failures are demonstrated to not impair the ability of the ABGTS system to maintain the ABSCE pressure boundary (under the required negative pressure of 0.25 inches w.g.), or the penetrations are isolated by physical means (e.g., locked-closed valves).

6.2.3.3.2 Emergency Gas Treatment System (EGTS)

The EGTS has the capabilities needed to preserve safety in accidents as severe as the design basis LOCA. To verify that the proper features are provided, functional analyses were conducted which consist of failure modes and effects analysis of the system, reviews of Regulatory Guide 1.52 sections to assure licensing requirement conformance, and performance analyses to verify that the system has the desired

accident mitigation capabilities. A detailed failure modes and effects analysis is presented in Table 6.2.3-2. The system is shown schematically in Figure 6.2.3-11.

The functional analyses conducted on the EGTS have shown that:

(1) Adequate isolation of the annulus vacuum control subsystem during accidents is provided. The two low leakage valves in series upstream of the annulus vacuum control subsystem fans used to isolate the two subsystems--one operated by each subsystem train--give assurance that the annulus vacuum control subsystem will be isolated during accidents. These valves fail closed.

(2) The air flow control dampers in the air cleanup subsystem align to service the affected reactor units. The network was designed to have the air flow control dampers shown in Figures 6.2.3-18 and 6.2.3-19 needed to service a particular reactor unit responsive to only the containment isolation signal from that particular reactor unit.

(3) The system intake and recirculation air outlets, shown on Figures 6.2.3-18 and 6.2.3-19, within the Shield Building annulus are positioned to promote mixing and dilution of primary containment leakage. Positioning the recirculation air manifold and the air outlets almost completely around the base of the annulus below the level of the containment penetrations assures a clean air flow past most of the penetrations. This air, warmed by the relative humidity heater, flows upward past these likely sources of leakage. In doing so, the flow impediments (i.e., penetrations, and structures within the annulus) tend to redirect this air flow to induce mixing and dilution. Substantial amounts of mixing and dilution are likely in the vertical rise of over 168 feet to the system air intake above the steel containment dome.

(4) System startup reliability is very high. The practice of automatically starting up both full capacity trains in the system simultaneously gives greater assurance that one train of equipment functions promptly upon receipt of an accident signal.

(5) The use of a single actuator in each equipment train to adjust dampers controlling the air flow recirculated and vented improves train reliability and minimizes the possibility of annulus pressure instability. Simultaneous adjustment that closes one damper and opens the other eliminates the hunting problems that could arise from nonsimultaneous operation of separately actuated dampers.

(6) The Train A and Train B air cleanup units are adequately protected from each other to eliminate the possibility of a single failure destroying the capability to process annulus air during emergencies. The 13.5 feet high and 27 inch thick concrete wall built between the two units protects each from missiles originating in the other unit.

The EGTS, designed prior to issuance of Regulatory Guide 1.52, is in general agreement with requirements in the guide. Details on this compliance with Regulatory Guide 1.52 are given in Table 6.5-1.

The performance analyses conducted to verify that the EGTS has the required accident mitigation capabilities were conducted in three basic parts. One of these was concerned with the capability for keeping the Shield Building annulus below atmospheric pressure at all times during a LOCA. The second part was an analysis of the cooling capabilities provided to keep temperatures within filters and adsorbers fully loaded with radioactive nuclides at safe levels. The third part was concerned with the site boundary and LPZ dosage contribution from radioactive nuclides present in annulus air releases during the design basis LOCA. These three analyses are discussed under the respective headings below.

Annulus Negative Pressure Control Capability

The capability of the EGTS to keep the Shield Building annulus below atmospheric pressure during a design basis LOCA was established with a time iteration analysis performed by a computer. Energy and mass balances were accomplished successively in accordance with mass and volume changes calculated to take place during each time increment. Such a methodology allowed sufficient freedom to account for:

(1) Steel containment vessel growth from internal pressure,

(2) Steel containment vessel growth from thermal expansion,

(3) Outside air inleakage into the Shield Building annulus, and

(4) Heat transfer from the steel containment structure to the annulus air mass.

To assure that this analysis was valid and conservative:

(1) Heat transfer from the primary containment atmosphere to the primary containment vessel was assumed to be convective. An air-steam mixture convective heat transfer coefficient was chosen to maximize heat transfer to the secondary containment atmosphere. The constant value of 400 Btu/hr-ft^2-°F given in Table 6.2.3-1 compares conservatively to the integrated transient heat transfer coefficients recommended in Branch Technical Position CSB 6-1. Heat transfer from the primary containment vessel to the annulus atmosphere and from the atmosphere to the secondary containment wall was assumed to be convective. Heat transfer from the primary containment vessel to the secondary containment wall was assumed to be by radiation. Forms of the transient convective heat transfer coefficients and values for the constant radiative heat transfer coefficients are given in Table 6.2.3-1. Consideration was given to the heat capacity of both the primary and secondary containment structures. The thermal conductivity and capacitance for these walls, as given in Table 6.2.3-1, agree closely with those obtained from Branch Technical Position CSB 6-1.

(2) The thermal growth of the steel vessel was based on linear expansion which was applied to the transient containment vessel temperature increases above the initial steady-state values to obtain the transient radial expansion (see Table 6.2.3-1 for total containment expansion). Temperature gradients were calculated for three regions: upper compartment, ice condenser, and lower compartment. The radial expansions in each of these three regions were converted to volume changes which were summed to yield a total annulus volume change due to primary containment vessel thermal expansion.

(3) Table 6.2.3-1 presents the characteristics of the internal pressure effects on the containment vessel. This model uses linear elastic thin shell theory to determine the expansion. The cylindrical portion of the vessel is assumed to act as a cylindrical shell with capped ends. The hemispherical dome expands uniformly as a simple sphere and includes the axial expansion of the cylinder. External vertical and circumferential stiffeners are assumed not to be present so that conservative results are obtained. This pressure-induced growth was assumed to occur instantaneously at the start of the LOCA.

(4) Air leakage into the Shield Building annulus was assumed to be 250 cfm at the post accident annulus control setpoint for a postulated single failure of one EGTS train. A more conservative air inleakage value of 957 cfm was assumed for an alternate single failure scenario which results in one pressure control train in full exhaust to the shield building exhaust stack while the other train remains functional. This higher inleakage value is based upon the higher negative pressure that will exist within the annulus during this scenario.

(5) The air temperature in the annulus was assumed to be a thermally mixed average.

(6) Only one train of the EGTS was assumed to operate during the first single failure scenario, allowing for a possible single failure in the other. An alternate single failure scenario was analyzed which postulates one pressure control train failing which results in full exhaust to the shield building exhaust stack while the other train remains functional.

The initial steady state conditions used in this analysis were as follows (refer also to Table 6.2.3-1):

	Pressure	Temperature	Relative Humidity
Containment upper compartment	atm.	110°F	0%
Ice condenser compartment	atm.	15°F	0%
Containment lower compartment	atm.	120°F	0%
Shield Building annulus	-5 in. w.g.	50°F	0%
Outside	atm.	0°	0%

These initial values were chosen to maximize the secondary containment pressure after the LOCA. The initial pressure of minus 5.0 inches of water gauge with respect to the outside is the pressure maintained by the annulus vacuum control subsystem during normal operation. The initial temperature of 50°F is the estimated minimum temperature which was assumed for maximum annulus air density. Similarly, the initial relative humidity of 0% was assumed for maximum annulus air density for conservatism.

The results obtained from this analysis for the first single failure scenario are shown in Figure 6.2.3-17. This annulus pressure and EGTS exhaust rate vs. time curve indicates that, after the initial containment pressure induced step increase, the pressure rises to a peak value of approximately minus 1.06 inch of water in about 79 seconds after the LOCA begins. The annulus pressure is then restored and maintained at or below the EGTS setpoint value as shown in Figure 6.2.3-17.

The results obtained from the analysis for the alternate single failure scenario are shown in Figure 6.2.3-17A. This annulus pressure and EGTS exhaust rate vs. time curve indicates that, after the initial containment pressure induced step increase, the pressure rises to a peak value of approximately minus 1.75 inch of water in about 44 seconds after the LOCA begins. The annulus pressure is then restored and maintained at or below the EGTS setpoint value as shown in Figure 6.2.3-17A.

The expansion of approximately 1,234 ft^3 due to internal temperature summed with the expansion of 766 ft^3 from internal pressure yields a total primary containment vessel expansion of approximately 2,000 ft^3. Such results indicate that:

(1) The negative pressure level of 5 inches of water below atmospheric in the Shield Building annulus maintained by the annulus vacuum control subsystem before an accident minimizes the amount of unfiltered radioactive nuclides potentially released to the environment before the air cleanup subsystem becomes operational.

(2) The rated flow rate of 4000 +10% cfm for each train of the air cleanup subsystem is adequate to keep the annulus pressure below the negative pressure setpoint throughout the remaining period of the LOCA.

Inactive Air Cleanup Unit Cooling Capabilities

The second performance analysis conducted to show that the EGTS can cope with circumstances that may occur in a LOCA was concerned with temperature control capabilities provided for air filters and adsorbers loaded with radioactive material. The analysis conducted assumed accident releases in accordance with Regulatory Guide 1.89 (100% noble gas activity, 50% iodines, and 1% particulates) and containment leakages of 0.25% per/day for the first day and 0.125% per/day from one to 100 days in accordance with Regulatory Guide 1.4. An additional assumption made was that the gamma and beta energy releases were transformed into heat within the filters and absorbers.

This occurs a few days after the LOCA takes place. The design objective is to assure that the air cleanup unit component temperatures do not exceed 200°F; it was found that a cooling air flow rate of 90 cfm is required. Such results indicate that the cooling air flow rate of 200 cfm provided for this purpose should keep the temperature within the carbon adsorber bank well below the 620°F carbon ignition temperature.

Site Boundary and LPZ Dosage Contributions

The last performance analysis conducted to show that the EGTS has the capability to perform in the required manner to preserve safety during a LOCA was concerned with the site boundary and LPZ dosage contributions arising from annulus air releases to the environs. This analysis is described and evaluated in Chapter 15.

6.2.3.3.3 Auxiliary Building Gas Treatment System (ABGTS)

The ABGTS has the capabilities needed to preserve safety in accidents as severe as a LOCA. This was determined by conducting functional analyses of the system to verify that the system has the proper features for accident mitigation which consist of a failure modes and effects analysis, a review of Regulatory Guide 1.52 sections to assure licensing requirement conformance, and a performance analysis to verify that the system has the desired accident mitigation capabilities. A detailed failure modes and effects analysis is presented in Table 6.2.3-3.

The functional analyses conducted on the ABGTS have shown that:

(1) The air intakes for the system are properly located to minimize accident effects. The use of the air intakes provided in the fuel handling and waste disposal areas minimizes the spread of airborne contamination that may be accidentally released at these positions in which the probability of an accidental release, e.g., a fuel handling accident, is more likely. This localization effect is provided without reducing the effectiveness of the system to cope with multiple activity released throughout the ABSCE that may occur during a LOCA. Such coverage is accomplished by utilizing the normal ventilation ducting to draw outside air inleakage from any point along the secondary containment enclosure to the fuel handling and waste disposal areas.

(2) Accident indication signals are utilized to bring the ABGTS into operation to assure that the system functions when needed to mitigate accident effects. Accidents in which this system is needed to preserve safety are automatically detected by at least one of the three instrumentation sets used to generate accident signals that result in system startup.

(3) System startup reliability is very high. The practice of allowing the automatic startup of both full capacity trains in the system gives greater assurance that one train of equipment functions upon receipt of an accident signal.

(4) The method adopted to establish and keep the negative pressure level within this secondary containment enclosure minimizes the time needed to reach the desired pressure level. Initially, the full capacity of the ABGTS fans is

utilized for this purpose. After reaching the desired operating level, the system control module allows outside air to enter the air flow network just upstream of the fan at a rate to keep the fans operating at full capacity with the enclosed volume at the desired negative pressure level. In this situation, the amount of air withdrawn from the enclosed volume is equal to the amount of outside air inleakage through the ABSCE. In addition, two vacuum breaker dampers in series are provided to admit outside air in case the modulating dampers fail.

(5) The ABSCE is maintained at a slightly negative pressure to reduce the amount of unprocessed air escaping from this secondary containment enclosure to the atmosphere to insignificant quantities. In addition, this negative pressure level is less than that which is maintained within the annulus; such that, any air leakage between the Auxiliary Building and the Shield Building is from the Auxiliary Building into the Shield Building.

(6) The Train A and Train B air cleanup units are sufficiently separated from each other to eliminate the possibility of a single failure destroying the capability to process Auxiliary Building air prior to its release to the atmosphere. Two concrete walls and a distance of more than 80 feet separate the two trains. The use of separate trains of the emergency power system to drive the air cleanup trains gives further assurance of proper equipment separation.

The review of the ABGTS conducted to determine its conformance with Regulatory Guide 1.52 has shown that this system, designed prior to issuance of the guide, is in general agreement with its requirements. Details on compliance with Regulatory Guide 1.52 are given in Table 6.5-2.

The performance analysis conducted to verify that the ABGTS has the required accident mitigation capabilities has shown that the system flow rate is sized properly to handle all expected outside air inleakage at a 1/4-inch water gauge negative pressure differential. This indicates that the nominal flow rate of 9000 cfm is sufficient to assure an adequate margin above the expected ABSCE inleakage (ACU filters are replaced as needed to maintain a minimum flow capability of 9300 cfm under surveillance instructions).

The performance analysis evaluated the capability of the ABGTS to reach and maintain a negative pressure of 1/4-inch water gauge with respect to the outside within the boundaries of the ABSCE. The following was utilized in the analysis:

(1) Leakage into the ABSCE is proportional to the square root of the pressure differential.

(2) Only one air cleanup unit in the ABGTS operates at the rated capacity.

(3) The air cleanup unit fan begins to operate 30 seconds after the initiation of an ABI signal, or a high radiation signal (See Section 6.2.3.2.3).

(4) The initial static pressure inside the ABSCE is conservatively considered to be atmospheric pressure, although the ABSCE is under a negative pressure during normal operation.

(5) The effective pressure head due to wind equals 1/8-inch water gauge.

(6) Initial average air temperature inside the ABSCE equals 140°F.

(7) Atmospheric temperature and pressure are 70°F and 14.4 psia, respectively.

(8) ABSCE isolation dampers/valves close within 30 seconds after receiving an ABI or a high radiation signal, except for the fuel handling area exhaust dampers which must close within 9.3 seconds.

(9) The non-safety-related general ventilation and fuel handling area exhaust fans are designed to shut down automatically following a LOCA. Each fan is provided with a safety related Class 1E primary circuit breaker and a safety related Class 1E shunt trip isolation switch which is tripped by a signal of the opposite train from that for the primary circuit breaker to ensure that power is isolated from the fan.

The analysis utilizes the first law of thermodynamics and perfect gas relations in an iterative approach to determine temperature and pressure changes in the ABSCE. Heat sources and sinks (ESF equipment room coolers) are considered.

The results obtained indicate that the ABGTS has the capability to reach and maintain a negative pressure differential of 0.25 inches water gauge within four minutes of the receipt of an ABI signal.

The system contains sufficient air cleanup facilities to keep the contributions to the site boundary and LPZ dosage arising from Auxiliary Building air releases to small fractions of the 10 CFR 100 guideline values. This part of the analysis is presented and evaluated in Chapter 15.

6.2.3.3.4 Tritium Production Core Evaluation (Unit 1 Only)

The effects of converting WBN to a Tritium Production Core (TPC) on the Secondary Containment design has been evaluated. The evaluation includes the effect of adding a leading edge flow meter (LEFM) into the main feedwater piping and the effect of uprating the plant nominal power level by 1.4%.

Secondary containment is designed to have the capability to control the atmosphere within the secondary containment and contiguous areas during normal operation and during plant upset conditions. As explained in UFSAR Section 6.2.1.3.12, the current licensing basis mass and energy release bounds that of the TPC; therefore, the conversion to a TPC will not have any effect on the secondary containment functional design.

6.2.3.4 Test and Inspections

6.2.3.4.1 Emergency Gas Treatment System (EGTS)

Preoperational testing of the EGTS was conducted to verify that the Shield Building and the EGTS had the capabilities needed to keep LOCA generated activity releases from the affected reactor unit at or below limits specified in 10 CFR 100. Included in the scope of testing were functional tests on all system instrumentation, controls, and alarms. The tests were structured to accomplish the following:

(1) Verification that Shield Building infiltration was less than or equal to the design value at the design negative pressure level for post-accident conditions.

(2) Verification of the system capability to establish and maintain the proper negative pressure level in the annulus.

(3) Verification that the air cleanup units met requirements specified in Regulatory Guide 1.52. Refer to Section 6.5.1.4.1 for further information related to tests applicable to the air cleanup units.

(4) Verification of proper operation of all system components, instrumentation, alarms, and data displays.

The periodic test program for the EGTS fans and air cleanup units is described in the Technical Specifications. A periodic test is performed once every 18 months to verify that the EGTS can maintain the annulus at a negative pressure within the instrument deadband immediately above and below the nominal design value. This test also verifies that the Shield Building inleakage rate to the annulus is less than or equal to 250 cfm at the nominal design value. A verification of system flow capacity and Shield Building inleakage rates at the specified negative pressure is adequate to confirm that the calculated depressurization time is conservative. The EGTS fans start within 30 seconds following the initiation of a containment isolation phase A signal.

6.2.3.4.2 Auxiliary Building Gas Treatment System (ABGTS)

Preoperational testing of the ABGTS was conducted to verify that the ABGTS has the capabilities needed to reduce radioactive releases from the ABSCE to the environment during an accident to levels sufficiently low to keep the site boundary dose rates below the requirements of 10 CFR 100. Included in the test scope were functional tests on all system instrumentation, controls, and alarms. The tests were structured to accomplish the following:

(1) Verification of the system startup and control capabilities, considering a single operating component failure.

(2) Verification of the capability of the air flow control modules to create and maintain a negative pressure within the ABSCE.

(3) Verification that ABSCE infiltration rate was less than or equal to the design value at the design negative pressure level considering a postulated failure of a non-safety related component.

(4) Verification that the air cleanup units met the requirements specified in Regulatory Guide 1.52. Refer to Section 6.5.1.4.2 for further information related to tests applicable to the air cleanup units.

The periodic test program for the ABGTS fans and air cleanup units is described in the Technical Specifications. A periodic test is performed to verify that the ABGTS can maintain the ABSCE at a negative pressure between -0.25 and -0.5 inches of water with respect to atmospheric pressure. This test also verifies that the ABSCE vacuum relief flow rate is greater than or equal to 1370 cfm while the ABSCE is being maintained at the negative pressure described above. A verification of system flow capacity and ABSCE vacuum relief flow rate at the specified negative pressure is adequate to confirm that the calculated depressurization time is conservative.

6.2.3.5 Instrumentation Requirements

6.2.3.5.1 Emergency Gas Treatment System (EGTS)

The air flow control instrumentation requirements for the EGTS are described in Section 6.2.3.2.2. Instrumentation associated with the air cleanup units is discussed in Section 6.5.1.5.1. The logic, controls, and instrumentation of this engineered safety feature system are such that a single failure of any component does not result in the loss of functional capability for the system.

6.2.3.5.2 Auxiliary Building Gas Treatment System (ABGTS)

Instrumentation required for the air flow control modules and air cleanup units are discussed in Section 6.2.3.2.3. Instrumentation associated with the air cleanup units is discussed in Section 6.5.1.5.2. The logic, controls, and instrumentation of this engineered safety feature system are such that a single failure of any component does not result in the loss of functional capability for the system.

REFERENCES

None

Table 6.2.3-1 Dual Containment Characteristics (Page 1 of 2)

I. Secondary Containment Design Information

	Shield Bldg.	ABSCE (Incl. 2 x Shield Bldg., 2 x Contmt., AB and CDWE Bldg.)
A. Free Volume (ft^3)	3.96×10^5	6.9×10^6
B. Pressure (in. wg)#		
Normal Operation	-5.0	-0.25
Post-Accident	-0.5	-0.25
C. Leak Rate at Post- Accident Pressure (%/day)	91	165.5
D. Exhaust Fans		
Normal Operation		
Number	4 (2/reactor unit)*	6**
Type	centrifugal	centrifugal
Post-Accident Operation		
Number	2***	2****
Type	centrifugal	centrifugal
E. Filters: Refer to Table 6.5-5		

II. Transient Analysis

A. Initial Conditions

1. Pressure = 14.4 psig
2. Annulus temperature = 50°F
3. Outside air temperature = 0°F
4. Thickness of secondary containment wall = 36 in.
5. Thickness of steel containment vessel = ranging from 0.8125 to 1.50 inches

* Annulus vacuum control subsystem
**Auxiliary Building general exhaust (2/unit) and fuel handling area exhaust (2)
***EGTS
****ABGTS
Due to instrument locations and inaccuracies, the actual setpoints are more negative than the required values shown.

Table 6.2.3-1 Dual Containment Characteristics (Page 2 of 2)

II. Transient Analysis (continued)

B. Thermal Characteristics

1. Primary containment wall

   a. Total expansion = 2000 ft^3
      Pressure expansion = 766 ft^3
      Temperature expansion = 1234 ft^3

   b. Thermal conductivity = 31 Btu/hr-ft-°F

   c. Heat capacity = 0.111 Btu/lb-°F

2. Secondary containment wall

   a. Thermal conductivity = 1.6 Btu/hr-ft-°F

   b. Heat capacity = 0.22 Btu/lb-°F

3. Heat transfer coefficients

   a. Primary containment atmosphere to primary containment wall = 400 Btu/hr-ft^2-°F

   b. Primary containment wall to secondary containment atmosphere = 0.19 $(\Delta T)^{1/3}$ Btu/hr-ft^2-°F

   c. Secondary containment wall to secondary containment atmosphere = 0.19 $(\Delta T)^{1/3}$ Btu/hr-ft^2-°F

   d. Primary containment emissivity = 0.90

   e. Secondary containment emissivity = 0.90

Table 6.2.3-2 Failure Modes and Effects Analysis Emergency Gas Treatment System (Page 1 of 17)

	COMPONENT IDENTIFICATION	FUNCTION	FAILURE MODE	POTENTIAL CAUSE	METHOD OF FAILURE DETECTION	EFFECT ON SYSTEM	EFFECT ON PLANT	REMARKS
1.	EGTS ACU Fans A-A & B-B	Draws air from the annulus to maintain negative pressure in the annulus during design basis events	- Stops running - Does not run	- Electrical Failure - Mechanical Failure	Low flow alarm in the MCR	Reduction of flow from annulus and temporary reduction in annulus negative pressure	None (See Remarks)	Redundant fan starts on low flow signal from failed fan and train. Both trains of the EGTS system start on receipt of a Phase A isolation signal. However, operators will align the system to single train operation after a period of time.
2.	EGTS ACU A-A & B-B	Filters air to remove airborne particulates and vapors from the annulus during design basis events	- Filters leak - Filters become loaded	- Defective filters - High levels of radioactivity contamination - Large quantities of particulates	High radiation levels indicated in the MCR from shield building exhaust vent	High radiation in shield building exhaust vent.	None (See remarks)	Periodic testing of EGTS ACUs is conducted in accordance with R.G. 1.52 to verify leak tightness of HEPA and charcoal bank efficiencies. High radiation levels are indicated in the MCR for operators to start the redundant ACU, if necessary.
3.	Containment annulus vacuum control fan suction isolation valves 1-FCV-65-52 1-FCV-65-53 2-FCV-65-4 2-FCV-65-5	Isolate annulus vacuum control fans from EGTS during ACU operation	Open	- Electrical Failure - Mechanical failure	Valve position indication light in the MCR	None (See Remarks)	None (See Remarks)	Redundant valve in series with failed valve provides isolation function.

Table 6.2.3-2 Failure Modes and Effects Analysis Emergency Gas Treatment System (Page 2 of 17)

	COMPONENT IDENTIFICATION	FUNCTION	FAILURE MODE	POTENTIAL CAUSE	METHOD OF FAILURE DETECTION	EFFECT ON SYSTEM	EFFECT ON PLANT	REMARKS
4.	B train isolation valves at EGTS Train A suction 1-FCV-65-8 (Unit 1 in LOCA)	Provide decay heat removal cooling flow path for A-A ACU when B-B ACU is operating for Unit 1 (valve open by operator action)	Open (ACU A-A is in operation)	- Electrical failure - Mechanical Failure	Valve position indication light in the MCR	Parallel flow path to ACU A-A is open	None (See Remarks)	Additional flow path is available which causes no adverse effect.
			Open (ACU A-A has not operated and B-B is operating)	- Electrical Failure - Mechanical Failure	Valve position indication light in the MCR	If valves 0-FCV-65-28A and -28B are open, there will be negative pressure on ACU A-A by suction ACU fan B-B.	None (See Remarks)	Valve on Fan A-A discharge side (0-FCV-65-24) closes when ACU A-A is in standby and will prevent backflow.
			Closed (ACU A-A has operated and is on stand-by and B-B is operating)	- Electrical Failure - Mechanical Failure	Valve position indication light in the MCR	None (See Remarks)	None (See Remarks)	Operator will return to using ACU A-A. An additional flow path is available by opening 1-FCV-65-10, 0-FCV-65-28A and 0-FCV-65-28B.

Table 6.2.3-2 Failure Modes and Effects Analysis Emergency Gas Treatment System (Page 3 of 17)

	COMPONENT IDENTIFICATION	FUNCTION	FAILURE MODE	POTENTIAL CAUSE	METHOD OF FAILURE DETECTION	EFFECT ON SYSTEM	EFFECT ON PLANT	REMARKS
4a.	B train isolation valves at EGTS Train A suction 2-FCV-65-7 (Unit 2 in LOCA)	Provide decay heat removal cooling flow path for A-A ACU when B-B ACU is operating for Unit 2 (valve open by operator action)	Open (ACU A-A is in operation)	- Electrical Failure - Mechanical Failure	Valve position indication light in the MCR	Parallel flow path to ACU A-A is open	None (See Remarks)	Additional flow path is available which causes no adverse effect.
			Open (ACU A-A has not operated and B-B is operating)	- Electrical Failure - Mechanical Failure	Valve position indication light in the MCR	If valves 0-FCV-65-28A and -28B are open, there will be negative pressure on ACU A-A by suction ACU fan B-B.	None (See Remarks)	Valve on Fan A-A discharge side (0-FCV-65-24) closes when ACU A-A is in standby and will prevent backflow.
			Closed (ACU A-A has operated and is on stand-by and B-B is operating)	- Electrical Failure - Mechanical Failure	Valve position indication light in the MCR	None (See Remarks)	None (See Remarks)	Operator will return to using ACU A-A. An additional flow path is available by opening 1-FCV-65-9, 0-FCV-65-28A and 0-FCV-65-28B.

Table 6.2.3-2 Failure Modes and Effects Analysis Emergency Gas Treatment System (Page 4 of 17)

	COMPONENT IDENTIFICATION	FUNCTION	FAILURE MODE	POTENTIAL CAUSE	METHOD OF FAILURE DETECTION	EFFECT ON SYSTEM	EFFECT ON PLANT	REMARKS
5.	A train isolation valves at EGTS Train B suction 1-FCV-65-51 (Unit 1 in LOCA)	Provide decay heat cooling path for B-B ACU when A-A ACU is operating for Unit 1 (valve opened by operator action)	Open (ACU B-B is in operation)	- Electrical failure - Mechanical failure	Valve position indication light in the MCR	Parallel flow path to ACU B-B is open	None (See Remarks)	Additional flow path is available which causes no adverse effect.
			Open (ACU B-B has not operated and A-A is operating)	- Electrical failure - Mechanical failure	Valve position indication light in the MCR	If valves 0-FCV-65-47A and - 47B are open, there will be negative pressure on ACU B-B by suction ACU fan A-A.	None (See Remarks)	Valve on Fan B-B discharge side 0-FCV-65-43 closes when ACU B-B is in standby and will prevent backflow.
			Closed (ACU B-B has operated and is on Stand-by and A-A is operating)	- Electrical failure - Mechanical failure	Valve position indication light in the MCR	None (See Remarks)	None (See Remarks)	Operator will return to using ACU B-B. An additional flow path is available by opening 1-FCV-65-30, 0-FCV-65-47A and 0-FCV-65-47B.

Table 6.2.3-2 Failure Modes and Effects Analysis Emergency Gas Treatment System (Page 5 of 17)

	COMPONENT IDENTIFICATION	FUNCTION	FAILURE MODE	POTENTIAL CAUSE	METHOD OF FAILURE DETECTION	EFFECT ON SYSTEM	EFFECT ON PLANT	REMARKS
5a.	A train isolation valves at EGTS Train B suction 2-FCV-65-50 (Unit 2 in LOCA)	Provide decay heat cooling path for B-B ACU when A-A ACU is operating for Unit 2 (valve opened by operator action)	Open (ACU B-B is in operation)	- Electrical failure - Mechanical failure	Valve position indication light in the MCR	Parallel flow path to ACU B-B is open	None (See Remarks)	Additional flow path is available which causes no adverse effect.
			Open (ACU B-B has not operated and A-A is operating)	- Electrical failure - Mechanical failure	Valve position indication light in the MCR	If valves 0-FCV-65-47A and - 47B are open, there will be negative pressure on ACU B-B by suction ACU fan A-A.	None (See Remarks)	Valve on Fan B-B discharge side 0-FCV-65-43 closes when ACU B-B is in standby and will prevent backflow.
			Closed (ACU B-B has operated and is on Stand-by and A-A is operating)	- Electrical failure - Mechanical failure	Valve position indication light in the MCR	None (See Remarks)	None (See Remarks)	Operator will return to using ACU B-B. An additional flow path is available by opening 1-FCV-65-29, 0-FCV-65-47A and 0-FCV-65-47B.

Table 6.2.3-2 Failure Modes and Effects Analysis Emergency Gas Treatment System (Page 6 of 17)

	COMPONENT IDENTIFICATION	FUNCTION	FAILURE MODE	POTENTIAL CAUSE	METHOD OF FAILURE DETECTION	EFFECT ON SYSTEM	EFFECT ON PLANT	REMARKS
6.	Isolation valve at EGTS Train A suction, 1-FCV-65-10 (Unit 1 in LOCA)	Isolation control valve that opens on a containment isolation signal so that the EGTS can exhaust air from the annulus. It also isolates Train A ACU during normal plant operation.	Closed (ACU A-A is in operation)	- Electrical failure - Mechanical failure	Low flow alarm and valve position indication light in the MCR	Momentary decrease in flow	None (See Remarks)	Redundant ACU Fan B-B starts on low flow signal from Fan A-A and Valve 1-FCV-65-30 is opened. The fan starting signal is independent of valve failure.
			Closed (both Trains A-A and B-B ACUs are operating)	- Electrical failure - Mechanical failure	Low flow alarm and valve indication light in the MCR	Momentary decrease in flow	None (See Remarks)	Train B ACU continues to operate with Valve 1-FCV-65-30 open.
			Open (Train B-B is operating. A-A is not operating and has never operated or has operated and stopped.)	- Electrical failure - Mechanical failure	Valve position indication light in the MCR	Open backflow path to ACU A-A	None (See Remarks)	Flow Control Valve 0-FCV-65-24 and Backdraft Damper 0-65-524 close when ACU A-A is in standby and will prevent backflow.

Table 6.2.3-2 Failure Modes and Effects Analysis Emergency Gas Treatment System (Page 7 of 17)

	COMPONENT IDENTIFICATION	FUNCTION	FAILURE MODE	POTENTIAL CAUSE	METHOD OF FAILURE DETECTION	EFFECT ON SYSTEM	EFFECT ON PLANT	REMARKS
6a.	Isolation valve at EGTS Train A suction, 1-FCV-65-9 (Unit 2 in LOCA)	Isolation control valve that opens on a containment isolation signal so that the EGTS can exhaust air from the annulus. It also isolates Train A ACU during normal plant operation.	Closed (ACU A-A is in operation)	- Electrical failure - Mechanical failure	Low flow alarm and valve position indication light in the MCR	Momentary decrease in flow	None (See Remarks)	Redundant ACU Fan B-B starts on low flow signal from Fan A-A and Valve 1-FCV-65-29 is opened. The fan starting signal is independent of valve failure.
			Closed (both Trains A-A and B-B ACUs are operating)	- Electrical failure - Mechanical failure	Low flow alarm and valve position indication light in the MCR	Momentary decrease in flow	None (See Remarks)	Train B ACU continues to operate with Valve 1-FCV-65-29 open.
			Open (Train B-B is operating. A-A is not operating and has never operated or has operated and stopped.)	- Electrical failure - Mechanical failure	Valve position indication light in the MCR	Open backflow path to ACU A-A	None (See Remarks)	Flow Control Valve 0-FCV-65-24 and Backdraft Damper 0-65-523 close when ACU A-A is in standby and will prevent backflow.

Table 6.2.3-2 Failure Modes and Effects Analysis Emergency Gas Treatment System (Page 8 of 17)

	COMPONENT IDENTIFICATION	FUNCTION	FAILURE MODE	POTENTIAL CAUSE	METHOD OF FAILURE DETECTION	EFFECT ON SYSTEM	EFFECT ON PLANT	REMARKS
7.	Isolation valves at EGTS Train B suction, 1-FCV-65-30 (Unit 1 in LOCA)	Isolation control valve that opens on a containment isolation signal so that the EGTS can exhaust air from the annulus. It also isolates Train B ACU during normal plant operation.	Closed (ACU B-B is in operation)	-Electrical failure - Mechanical failure	Low flow alarm and valve position indication light in the MCR	Momentary decrease in flow	None (See remarks)	Redundant ACU Fan A-A starts on low flow signal from Fan B-B and Valve 1-FCV-65-10 is opened. The fan starting signal is independent of valve failure.
			Closed (both Trains A-A and B-B ACUs are operating.)	- Electrical failure - Mechanical failure	Low flow alarm and valve position indication light in the MCR	Momentary decrease in flow	None (See remarks)	Train A ACU continues to operate with Valve 1-FCV-65-10 open.
			Open (Train A-A is operating. B-B is not operating and has never operated or has operated and stopped.)	- Electrical failure - Mechanical failure	Valve position indication light in the MCR	Open backflow path to ACU B-B	None (See remarks)	Flow Control Valve 0-FCV-65-43 and backdraft damper 0-65-526 close when ACU B-B is in standby and will prevent backflow. Also, the additional flow paths will not cause an adverse effect.

Table 6.2.3-2 Failure Modes and Effects Analysis Emergency Gas Treatment System (Page 9 of 17)

	COMPONENT IDENTIFICATION	FUNCTION	FAILURE MODE	POTENTIAL CAUSE	METHOD OF FAILURE DETECTION	EFFECT ON SYSTEM	EFFECT ON PLANT	REMARKS
7a.	Isolation valves at EGTS Train B suction, 1-FCV-65-29 (Unit 2 in LOCA)	Isolation control valve that opens on a containment isolation signal so that the EGTS can exhaust air from the annulus. It also isolates Train B ACU during normal plant operation.	Closed (ACU B-B is in operation)	- Electrical failure - Mechanical failure	Low flow alarm and valve position indication light in the MCR	Momentary decrease in flow	None (See remarks)	Redundant ACU Fan A-A starts on low flow signal from Fan B-B and Valve 1-FCV-65-9 is opened. The fan starting signal is independent of valve failure.
			Closed (both Trains A-A and B-B ACUs are operating.)	- Electrical failure - Mechanical failure	Low flow alarm and valve position indication light in the MCR	Momentary decrease in flow	None (See remarks)	Train A ACU continues to operate with Valve 1-FCV-65-9 open.
			Open (Train B-B is operating. A-A is not operating and has never operated or has operated and stopped.)	- Electrical failure - Mechanical failure	Valve position indication light in the MCR	Open backflow path to ACU A-A	None (See remarks)	Flow Control Valve 0-FCV-65-24 and backdraft damper 0-65-525 close when ACU B-B is in standby and will prevent backflow. Also, the additional flow paths will not cause an adverse effect.
8.	EGTS fan discharge isolation valves 0-FCV-65-24 0-FCV-65-43	Isolates EGTS fan from duct distribution system when EGTS fan is on standby	One damper fails closed (EGTS fan is operating)	- Electrical failure - Mechanical failure	Low flow alarm and valve position indication light in the MCR	Loss of flow through the affected EGTS train	None (See remarks)	Redundant fan starts on low flow signal from the affected train. Fan starting signal is independent of valve failure.

Table 6.2.3-2 Failure Modes and Effects Analysis Emergency Gas Treatment System (Page 10 of 17)

	COMPONENT IDENTIFICATION	FUNCTION	FAILURE MODE	POTENTIAL CAUSE	METHOD OF FAILURE DETECTION	EFFECT ON SYSTEM	EFFECT ON PLANT	REMARKS
9.	Shield building exhaust isolation dampers 1-FCO-65-26 1-FCO-65-27 2-FCO-65-45 2-FCO-65-46	Open air path for EGTS exhaust to be discharged to either shield building vent and recirculated air flow to either annulus	One damper fails closed	- Electrical failure - Mechanical failure	Damper position indication light in the MCR	None (See Remarks)	None (See Remarks)	Damper in parallel flow path is open.
10	EGTS inlet flow elements abandoned in place (1-FE-65-54 and 2-FE-65-3).							
11	Shield building Exhaust flow elements abandoned in place (1-FE-65-84 and -85, 1-FE-65-78, 2-FE-65-84 and -85, 2-FE-65-78)							

Table 6.2.3-2 Failure Modes and Effects Analysis Emergency Gas Treatment System (Page 11 of 17)

	COMPONENT IDENTIFICATION	FUNCTION	FAILURE MODE	POTENTIAL CAUSE	METHOD OF FAILURE DETECTION	EFFECT ON SYSTEM	EFFECT ON PLANT	REMARKS
12.	Back draft dampers 0-65-523 0-65-524	Prevent backflow through Train A ACU when Train B ACU is in operation	Damper closed (Train A ACU is in operation and Train B ACU is in standby)	- Mechanical failure	Low flow alarm indication light in the MCR	Momentary decrease in flow from annulus	None (See Remarks)	Redundant ACU Fan B-B starts on low flow from Train A-A. Fan starting signal is independent of damper failure.
			Damper closed (Both Train A & Train B are operational)	- Mechanical failure	Low flow alarm indication light in the MCR	None (See Remarks)	None (See Remarks)	Train B ACU continues to operate and Train A will be turned off by operator.
13.	Back draft dampers 0-65-525 0-65-526	Prevent backflow through Train B ACU when Train A ACU is in operation	Damper closed (Train B ACU is in operation and Train A ACU is in standby)	- Mechanical failure	Low flow alarm indication light in the MCR	Momentary decrease in flow from annulus	None (See Remarks)	Redundant ACU Fan A-A starts on low flow from Train B-B. Fan starting signal is independent of damper failure.
			Damper closed (Both Train A & Train B are operational)	- Mechanical failure	Low flow alarm indication light in the MCR	None (See Remarks)	None (See Remarks)	Train A ACU continues to operate and Train B will be turned off by operator.

Table 6.2.3-2 Failure Modes and Effects Analysis Emergency Gas Treatment System (Page 12 of 17)

	COMPONENT IDENTIFICATION	FUNCTION	FAILURE MODE	POTENTIAL CAUSE	METHOD OF FAILURE DETECTION	EFFECT ON SYSTEM	EFFECT ON PLANT	REMARKS
14.	Modulating dampers 1-PCO-65-80 1-PCO-65-82 1-PCO-65-88 1-PCO-65-89 2-PCO-65-80 2-PCO-65-82 2-PCO-65-88 2-PCO-65-89	Modulates EGTS flow released to outside atmosphere, controlling to the required annulus negative pressure	Damper closed, open or improper modulation.The worst case PCO single failure is such that either 1(2)-PCO-65-80 or -82 fail open to the shield building stack, and the opposite train PCOs still modulate and attempt to maintain annulus ΔP at the -1.45" w.g. control setpoint. This single failure scenario takes the short term annulus steady state ΔP to -2.1" w.g. (i.e., failed PCO train with open flow path to the shield building stack and non-failed PCO train with open recirculation flow path to the annulus and two fans operating.)	- Mechanical linkage failure - Control Loop Failure of one Train of PCOs.	Pressure differential is indicated in the MCR to detect the -2.1" w.g. annulus ΔP. However, the worst case PCO failure has been analyzed to exist with both trains of EGTS fans running for the first one to two hours after event initiation; and then one fan running thereafter due to operator action to shut off one EGTS fan.	With the worst case PCO single failure, the EGTS maintains annulus ΔP at -2.1" w.g. (steady state) during the short term, which is acceptable since it is more negative than the -1.45" w.g. controller setpoint. When one EGTS fan is stopped between one and two hours by operator action, the resulting configuration maintains annulus ΔP at -1.60" w.g., which is still slightly more negative than -1.45" w.g.	None. The elevated 957 cfm short term / 694 cfm long term EGTS exhaust flow associate with the worst case PCO single failure mode is addressed in Remarks.	Off-site and control room radiological dose analysis demonstrates that the offsite and control room dose results remain below the regulatory limits, when the elevated EGTS exhaust flows associate with the worst case PCO single failure scenario are considered.

Table 6.2.3-2 Failure Modes and Effects Analysis Emergency Gas Treatment System (Page 13 of 17)

	COMPONENT IDENTIFICATION	FUNCTION	FAILURE MODE	POTENTIAL CAUSE	METHOD OF FAILURE DETECTION	EFFECT ON SYSTEM	EFFECT ON PLANT	REMARKS
15.	Isolation valves 1-PCV-65-81 1-PCV-65-83 1-PCV-65-86 1-PCV-65-87 2-PCV-65-81 2-PCV-65-83 2-PCV-65-86 2-PCV-65-87	Isolates EGTS ductwork from outside atmosphere and ring header during normal plant operation	One valve closed when EGTS is in operation	- Electrical failure - Mechanical Failure	Valve position indication light in the MCR	One of the two parallel flow paths is lost	None (See Remarks)	Redundant flow path is available
16.	Isolation valves 0-FCV-65-28A 0-FCV-65-28B	Valves open to remove decay heat in the idle train ACU	One valve opens when bypass cooling is not in operation	-Electrical failure - Mechanical Failure	Valve position indication light in the MCR	None (See Remarks)	None (See Remarks)	Redundant isolation valves
			One valve closed when bypass cooling is in operation	- Electrical failure - Mechanical failure	Valve position indication light in the MCR	None (See Remark)	None (See Remarks)	Bypass cooling provision will not be used unless ACU fails and enough heat is generated by radioactivity collected on HEPA and charcoal adsorber to raise the charcoal bed temperature significantly. Therefore, a second failure (closed isolation valve) need not be postulated.

Table 6.2.3-2 Failure Modes and Effects Analysis Emergency Gas Treatment System (Page 14 of 17)

	COMPONENT IDENTIFICATION	FUNCTION	FAILURE MODE	POTENTIAL CAUSE	METHOD OF FAILURE DETECTION	EFFECT ON SYSTEM	EFFECT ON PLANT	REMARKS
17.	Isolation valves 0-FCV-65-47A 0-FCV-65-47B	Valves open to remove decay heat in the idle train ACU	One valve opens when bypass cooling is not in operation	- Electrical failure - Mechanical failure	Valve position indication light in the MCR	None (See Remarks)	None (See Remarks)	Redundant isolation valves
			One valve closed when bypass cooling is in operation	- Electrical failure - Mechanical failure	Valve position indication light in the MCR	None (See Remarks)	None (See Remarks)	Bypass cooling provision will not be used unless ACU fails and enough heat is generated by radioactivity collected on HEPA and charcoal adsorber to raise the charcoal bed temperature significantly. Therefore, a second failure (closed isolation valve) need not be postulated.
18.	Flow elements 0-FS-65-31A/B 0-FS-65-55A/B	Opens decay heat removal isolation valves to the operating ACU when no flow is sensed at the idle ACU	No signal sent	- Electrical failure	Valve position indication light in the MCR	None (See Remarks)	None (See Remarks)	Bypass cooling provision will not be used unless ACU fails and enough heat is generated by radioactivity collected on HEPA and charcoal adsorber to raise the charcoal bed temperature significantly. Therefore, a second failure (closed isolation valve) need not be postulated.

Table 6.2.3-2 Failure Modes and Effects Analysis Emergency Gas Treatment System (Page 15 of 17)

	COMPONENT IDENTIFICATION	FUNCTION	FAILURE MODE	POTENTIAL CAUSE	METHOD OF FAILURE DETECTION	EFFECT ON SYSTEM	EFFECT ON PLANT	REMARKS
19.	Flow elements 0-FS-65-31B/A 0-FS-65-55B/A	Starts EGTS standby ACU unit upon loss of flow in normally operating ACU	No signal sent	- Electrical failure	Valve position indication light in the MCR	Momentary decrease in flow from annulus	None (See Remarks)	Bypass cooling provision will not be used unless ACU fails and enough heat is generated by radioactivity collected on HEPA and charcoal adsorber to raise the charcoal bed temperature significantly. Therefore, a second failure (closed isolation valve because signal not sent) need not be postulated.
20.	Flow elements 0-FS-65-25A/B 0-FS-65-44A/B	Shuts off relative humidity heater on low air flow and alarm in the MCR	No signal sent	- Electrical failure	Low flow and high temperature alarms in the MCR	Humidity heater may stay on after EGTS fan stops	None (See Remarks)	The EGTS fan can be stopped either by operator's action or fan failure, which is a single failure; the other EGTS fan is available to function. The heater requires two signals to operate: one from flow switch and one from temperature switch. Therefore, heater not receiving the signal need not be assumed. .

Table 6.2.3-2 Failure Modes and Effects Analysis Emergency Gas Treatment System (Page 16 of 17)

	COMPONENT IDENTIFICATION	FUNCTION	FAILURE MODE	POTENTIAL CAUSE	METHOD OF FAILURE DETECTION	EFFECT ON SYSTEM	EFFECT ON PLANT	REMARKS
21.	Flow elements 0-FS-65-25B/A 0-FS-65-44B/A	Opens decay heat removal isolation valves on idle ACU when high flow is sensed at the operating ACU	No signal sent	- Electrical failure	Valve position indication light in the MCR	None (See Remarks)	None (See Remarks)	Bypass cooling provision will not be used unless ACU fails and enough heat is generated by radioactivity collected on HEPA and charcoal adsorber to raise the charcoal bed temperature significantly. Therefore, a second failure (closed isolation valve because signal not sent) need not be postulated.
22	Train A Emergency Power	Provides Class 1E diesel-backed power supply to active components of Train A of EGTS	Loss of or inadequate Voltage	Diesel generator failure; bus fault (Train A); operator error	Alarm and indication in the MCR	Loss of redundancy in EGTS exhaust flow paths	None (See Remarks)	Redundant train of EGTS is turned on by automatic and manual actions on loss of fan airflow, or annulus ΔP, which ensures that the EGTS safety functions are continued to be performed.
23	Train B Emergency Power	Provides Class 1E diesel-backed power supply to active components of Train B of EGTS	Loss of or inadequate Voltage	Diesel generator failure; bus fault (Train B); operator error	Alarm and indication in the MCR	Loss of redundancy in EGTS exhaust flow paths	None (See Remarks)	Redundant train of EGTS is turned on by automatic and manual actions on loss of fan airflow, or annulus ΔP, which ensures that the EGTS safety functions are continued to be performed.

Table 6.2.3-2 Failure Modes and Effects Analysis Emergency Gas Treatment System (Page 17 of 17)

	COMPONENT IDENTIFICATION	FUNCTION	FAILURE MODE	POTENTIAL CAUSE	METHOD OF FAILURE DETECTION	EFFECT ON SYSTEM	EFFECT ON PLANT	REMARKS
24	Deluge Valve 0-FCV-26-175	Floods the carbon absorbers in the event of fire	Spurious actuation	- Electrical failure - Mechanical failure	Local and MCR alarms on water discharge	None (See Remarks)	None (See Remarks)	ACU will not be flooded since the fusible links on the spray heads will be closed due to absence of heat.
24a	Deluge System Piping/Heads on Train A	Floods the carbon absorbers in the event of fire	Spurious actuation	- Fusible Link Failure - Piping Failure	None	Loss of redundancy in EGTS	None (See Remarks)	Opposite train ACU is unaffected and remains available.
25	Deluge Valve 0-FCV-26-179	Floods the carbon absorbers in the event of fire	Spurious actuation	- Electrical failure - Mechanical failure	Local and MCR alarms on water discharge	None (See Remarks)	None (See Remarks)	ACU will not be flooded since the fusible links on the spray heads will be closed due to absence of heat.
25a	Deluge System Piping/Heads on Train B	Floods the carbon absorbers in the event of fire	Spurious actuation	- Fusible Link Failure - Piping Failure	None	Loss of redundancy in EGTS	None (See Remarks)	Opposite train ACU is unaffected and remains available.

Table 6.2.3-3 Failure Modes and Effects Analysis For Passive Failure for the ABGTS (Page 1 of 27)

ITEM NO.	COMPONENT	FUNCTION	FAILURE MODE	POTENTIAL CAUSE	METHOD OF DETECTION	EFFECT ON SYSTEM	EFFECT ON PLANT	REMARKS
1	Auxiliary Building Isolation (ABI) signal Train A	De-energizes solenoid valves to close associated dampers and establish AB secondary containment enclosure; stops AB general ventilation fans; starts various ESF room coolers; starts ABGTS fans to maintain negative pressure in the ABSCE and remove contaminants from the ABSCE air prior to discharge to atmosphere.	Signal fails.	Train A vital ac bus failure; Relay VKA1 failure; Train A initiating signal (Phase A containment isolation, high rad in refueling area, high temp. in Aux. Building general supply duct) failure.	MCR indication of only one train ABGTS fan starting and one train of ABSCE dampers closing.	Loss of redundancy in ABSCE isolation and in ABGTS until operator starts Train A ABGTS manually from MCR, after ascertaining that Train B ABI signal is not spurious.	None. (See Remarks)	Train A and Train B ABI initiating signals are derived from independent (train-separated) qualified devices. Either train signal is sufficient to stop all AB general vent supply and exhaust fans and fuel handling area exhaust fans. SInce ABSCE dampers are arranged in series, either train's actuation is adequate to establish the ABSCE boundary.
		Starts Train A ABGTS, closes Train A ABSCE isolation dampers, stops Train A containment purge air supply and exhaust fans (Ref.5.28)	Same as above.	Same as above.	Same as above.	Same as above.	None. (See Remarks).	Only Train B ABGTS will start and only Train B ABSCE isolation dampers will close. Train A containment purge air supply fan and exhaust fan may be running, and the Incore Instrument Room suppy and exhaust fans will stop (both Train B). For conservatism, it is assumed that all exhaust fans are stopped. Preoperational and surveillance tests have shown that, in this configuration, the ABGTS is able to fulfill its safety functions.
		Same as above.	Spuriously starts.	Operator error, spurious initiating signal (initiating signals listed above)	MCR indicating lights on ABGTS start and ABSCE dampers' closure.	Disrupts the normally operating ventilation system, and starts safety-related systems and components.	None. (See Remarks)	Unnecessary isolation of ABSCE and actuation of ABGTS, as well as disrupting the normally operating ventilation systems and starting the ESF pump room and area coolers.

Table 6.2.3-3 Failure Modes and Effects Analysis For Passive Failure for the ABGTS (Page 2 of 27)

ITEM NO.	COMPONENT	FUNCTION	FAILURE MODE	POTENTIAL CAUSE	METHOD OF DETECTION	EFFECT ON SYSTEM	EFFECT ON PLANT	REMARKS
2	Auxiliary Building Isolation (ABI) signal Train B	De-energizes solenoid valves to close associated dampers and establish AB secondary containment enclosure; stops AB general ventilation fans; starts various ESF room coolers; starts ABGTS fans to maintain negative pressure in ABSCE and remove contaminants from the ABSCE air prior to discharge to atmosphere.	Signal fails.	Train B vital ac bus failure; Relay VKA1 failure; Train B initiating signal (Phase A containment isolation, high rad in refueling area, high temp. in Aux. Building general supply duct) failure.	MCR indication of only one train ABGTS fan starting and one train of ABSCE dampers closing.	Loss of redundancy in ABSCE isolation and in ABGTS until operator starts Train B ABGTS manually from MCR, after ascertaining that Train A ABI signal is not spurious	None (See Remarks)	Train A and Train B ABI initiating signals are derived from independent (train-separated) qualified devices. Either train signal is sufficient to stop all AB general vent supply and exhaust fans and fuel handling area exhaust fans. SInce ABSCE dampers are arranged in series, either train's actuation is adequate to establish the ABSCE boundary.
		Starts Train B ABGTS, closes Train B ABSCE isolation dampers, stops Train B containment purge air supply and exhaust fans and stops the Incore Instrument Room supply and exhaust fans (Ref.5.28)	Same as above.	Same as above.	Same as above.	Same as above.	None. (See Remarks).	Only Train B ABGTS will start and only Train B ABSCE isolation dampers will close. Train B containment purge air supply fan and exhaust fan may be running, and the Incore Instrument Room suppy and exhaust fans may be running. For conservatism, it is assumed that all exhaust fans are stopped. Preoperational and surveillance tests have shown that, in this configuration, the ABGTS is able to fulfill its safety functions. (See Section 8.3 for detail).
		Same as above.	Spuriously starts.	Operator error, spurious initiating signal (initiating signals listed above)	MCR indicating lights on ABGTS start and ABSCE dampers' closure.	Disrupts the normally operating ventilation systems and starts safety-related systems and components	None. (See Remarks).	Unnecessary isolation of ABSCE and actuation of ABGTS, as well as disrupting the normally operating ventilation systems and starting the ESF pump room and area coolers.

Table 6.2.3-3 Failure Modes and Effects Analysis For Passive Failure for the ABGTS (Page 3 of 27)

ITEM NO.	COMPONENT	FUNCTION	FAILURE MODE	POTENTIAL CAUSE	METHOD OF DETECTION	EFFECT ON SYSTEM	EFFECT ON PLANT	REMARKS
3	ABGTS Exhaust Fan A-A	Draws a portion of air in the ABSCE through an air cleanup unit (ACU) to remove radioactive contaminants and discharge into the shield building exhaust vent to maintain a negative pressure in the ABSCE relative to the outside.	Fails to start or fails to run.	Mechanical failure; Train A power failure; Train A ABI signal (HS in A-Auto).	Indicating light in the MCR.	Loss of redundancy in ABGTS.	None. ABGTS Fan B-B can perform the functions of maintaining the ABSCE at a negative pressure and removing contaminants.	Handswitches for ABGTS Fans A-A and B-B in the MCR should normally be in the A-Auto position. On an ABI signal, both fans start and the operator may stop one fan and place its handswitch in the P-Auto (pull-out) position. This mode of operation is expected to occur after 30 minutes of two fan operation. During an ABI, the fan in the P-Auto mode will start automatically on insufficient negative pressure in the ABSCE relative to the outside. An alarm is provided for the condition when flow is inadequate 45 seconds after fan start.
			Starts spuriously.	Spurious Train A ABI signal (HS in A-Auto); spurious low flow signal from Fan B-B after valid ABI signal (HS in P-Auto).	See "Remarks" column.	Vacuum relief line dampers may open to prevent excessive negative pressure in ABSCE by admitting outside air.	None (See Remarks)	Ind. light in the MCR provides indication to operator that fan is running. However, if only one ABGTS train starts when both fans are in A-Auto or if the fan in P-Auto starts, the operator cannot determine whether the signal is valid or spurious (no detection of spurious operation). This is acceptable since there is no impact on plant safety without a second failure (e.g., failure of a vacuum relief damper). See end of Table 6.2.3-3 for the effects of the potential ABGTS fan failures on the EGTS's ability to maintain the annulus ΔP more negative than that of the ABSCE.

Table 6.2.3-3 Failure Modes and Effects Analysis For Passive Failure for the ABGTS (Page 4 of 27)

ITEM NO.	COMPONENT	FUNCTION	FAILURE MODE	POTENTIAL CAUSE	METHOD OF DETECTION	EFFECT ON SYSTEM	EFFECT ON PLANT	REMARKS
4	ABGTS Exhaust Fan B-B	Draws a portion of air in the ABSCE through an air cleanup unit (ACU) to remove radioactive contaminants and discharge into the shield building exhaust vent to maintain a negative pressure in the ABSCE relative to the outside.	Fails to start or fails to run.	Mechanical failure; Train B power failure; Train B ABI signal failure (HS in A-Auto).	Indicating light in the MCR.	Loss of redundancy in ABGTS.	None. ABGTS Fan A-A can perform the functions of maintaining the ABSCE at a negative pressure and removing contaminants.	Handswitches for ABGTS Fans A-A and B-B, in the MCR should normally be in the A-Auto position. On an ABI signal, both fans start and the operator may stop one fan and place its handswitch in the P-Auto (pull-out) position. This mode of operation is expected to occur after 30 minutes of two fan operation. During an ABI, the fan in the P-Auto mode will start automatically on insufficient negative pressure in the ABSCE relative to the outside. An alarm is provided for the condition when flow is inadequate 45 seconds after fan start.
			Starts spuriously.	Spurious Train B ABI signal (HS in A-Auto); spurious low flow signal from Fan A-A after valid ABI signal (HS in P-Auto).	See "Remarks" column.	Vacuum relief line dampers may open to prevent excessive negative pressure in ABSCE by admitting outside air.	None.	Ind. light in the MCR provides indication to operator that fan is running. However, if only one ABGTS train starts when both fans are in A-Auto or if the fan in P-Auto starts, the operator cannot determine whether the signal is valid or spurious (no detection of spurious operation). This is acceptable since there is no impact on plant safety without a second failure (e.g., failure of a vacuum relief damper). See end of Table 6.2.3-3 for the effects of the potential ABGTS fan failures on the EGTS's ability to maintain the annulus ΔP more negative than that of the ABSCE.

Table 6.2.3-3 Failure Modes and Effects Analysis For Passive Failure for the ABGTS (Page 5 of 27)

ITEM NO.	COMPONENT	FUNCTION	FAILURE MODE	POTENTIAL CAUSE	METHOD OF DETECTION	EFFECT ON SYSTEM	EFFECT ON PLANT	REMARKS
5	ABGTS Fan A-A Inlet Damper 1-FCO-30-146B	Provides flowpath for ABGTS Exhaust Fan A-A.	Fails to open or stuck closed.	Mechanical failure.	Alarm in the MCR from 1-FS-30-146	Loss of redundancy in ABGTS.	None (See Remarks)	ABGTS Fan A-A Inlet and Outlet Dampers 1-FCO-30-146A and 1-FCO-30-146B open on starting of associated fan and close when the fan stops. ABGTS fan B-B provides redundancy.
		Provides isolation of ACU A-A when fan A-A is not running.	Fails to close or stuck open.	Mechanical failure	Alarm in the MCR from 1-FS-30-146	None (See Remarks)	None (See Remarks)	Damper 146A provides redundancy (both dampers fail closed).
6	ABGTS Fan A-A Outlet Damper 1-FCO-30-146A	Provides flowpath for ABGTS Exhaust Fan A-A.	Fails to open or stuck closed.	Mechanical failure.	Alarm in the MCR from 1-FS-30-146	Loss of redundancy in ABGTS.	None (See Remarks)	ABGTS Fan A-A Inlet and Outlet Dampers 1-FCO-30-146A and 1-FCO-30-146B open on starting of associated fan and close when the fan stops.
		Provides isolation of ACU A-A when fan A-A is not running.	Fails to close or stuck open.	Mechanical failure.	Alarm in the MCR from 1-FS-30-146	None (See Remarks)	None (See Remarks)	Damper 146B provides redundancy (both dampers fail closed).
7	ABGTS Fan B-B Inlet Damper 2-FCO-30-157B	Provides flowpath for ABGTS Exhaust Fan B-B.	Fails to open or stuck closed.	Mechanical failure.	Alarm in the MCR from 2-FS-30-165	Loss of redundancy in ABGTS.	None (See Remarks)	ABGTS Fan B-B Inlet and Outlet Dampers 2-FCO-30-157A and 2-FCO-30-157B open on starting of associated fan and close when the fan stops. ABGTS fan A-A provides redundancy.
		Provides isolation of ACU B-B when fan B-B is not running.	Fails to close or stuck open	Mechanical failure.	Alarm in the MCR from 2-FS-30-165	Loss of redundancy in ABGTS.	None (See Remarks)	Damper 157A provides redundancy (both dampers fail closed).

Table 6.2.3-3 Failure Modes and Effects Analysis For Passive Failure for the ABGTS (Page 6 of 27)

ITEM NO.	COMPONENT	FUNCTION	FAILURE MODE	POTENTIAL CAUSE	METHOD OF DETECTION	EFFECT ON SYSTEM	EFFECT ON PLANT	REMARKS
8	ABGTS Fan B-B Outlet Damper 2-FCO-30-146A	Provides flowpath for ABGTS Exhaust Fan B-B.	Fails to open or stuck closed.	Mechanical failure.	Alarm in the MCR from 2-FS-30-165	Loss of redundancy in ABGTS.	None (See Remarks)	ABGTS Fan B-B Inlet and Outlet Dampers 2-FCO-30-157A and 2-FCO-30-157B open on starting of associated fan and close when the fan stops. ABGTS fan A-A provides redundancy.
		Provides isolation of ACU B-B when fan B-B is not running.	Fails to close or stuck open	Mechanical failure.	Alarm in the MCR from 2-FS-30-165	Loss of redundancy in ABGTS.	None (See Remarks)	Damper 157B provides redundancy (both dampers fail closed).
9	Isolation Damper 0-FCO-30-137 Train A	Closes on ABI or high rad in refueling area signal to isolate Fuel Handling Area Exhaust Fan A-A and to establish boundary for ABGTS.	Stuck open, fails to close, or spuriously opens.	Mechanical failure; hot short in control wiring; Train A ABI or high rad in refueling area signal failure; HS failure to spring return from open to A-Auto.	Indicating light in the MCR.	Loss of redundancy in isolation of Fuel Handling Area Exhaust Fan A-A.	None. Train B Damper 0-FCO-30-138 provides isolation and maintains the ABSCE.	Damper fails closed on loss of Train A 125 Vdc power. Train A (0-FCO-30-137) and Train B (0-FCO-30-138) dampers, in series, are provided with non-safety control air and both dampers fail closed on loss of control air. Independence of Train A and Train B isolation signals is discussed in "Remarks" under Items 1 and 2 of this table. Damper failure to open is not listed since the damper has no safety function to open for DBE mitigation.

Table 6.2.3-3 Failure Modes and Effects Analysis For Passive Failure for the ABGTS (Page 7 of 27)

ITEM NO.	COMPONENT	FUNCTION	FAILURE MODE	POTENTIAL CAUSE	METHOD OF DETECTION	EFFECT ON SYSTEM	EFFECT ON PLANT	REMARKS
10	Isolation Damper 0-FCO-30-138 Train B	Closes on ABI or high rad in refueling area signal to isolate Fuel Handling Area Exhaust Fan A-A and to establish boundary for ABGTS.	Stuck open, fails to close, or spuriously opens.	Mechanical failure; hot short in control wiring; Train B ABI or high rad in refueling area signal failure; HS failure to spring return from open to A-Auto.	Indicating light in the MCR.	Loss of redundancy in isolation of Fuel Handling Area Exhaust Fan A-A.	None. Train A Damper 0-FCO-30-137 provides isolation and maintains the ABSCE.	Damper fails closed on loss of Train A 125 Vdc power. Train A (0-FCO-30-137) and Train B (0-FCO-30-138) dampers, in series, are provided with non-safety control air and both dampers fail closed on loss of control air. Independence of Train A and Train B isolation signals is discussed in "Remarks" under Items 1 and 2 of this table. Damper failure to open is not listed since the damper has no safety function to open for DBE mitigation.
11	Isolation Damper 0-FCO-30-140 Train A	Closes on ABI or high rad in refueling area signal to isolate Fuel Handling Area Exhaust Fan B-B and to establish boundary for ABGTS.	Stuck open, fails to close, or spuriously opens.	Mechanical failure; hot short in control wiring; Train A ABI or high rad in refueling area signal failure; HS failure to spring return from open to A-Auto.	Indicating light in the MCR.	Loss of redundancy in isolation of Fuel Handling Area Exhaust Fan B-B.	None. Train B Damper 0-FCO-30-141 provides isolation and maintains the ABSCE.	Damper fails closed on loss of Train A 125 Vdc power. Train A (0-FCO-30-140) and Train B (0-FCO-30-141) dampers, in series, are provided with non-safety control air and both dampers fail closed on loss of control air. Independence of Train A and Train B isolation signals is discussed in "Remarks" under Items 1 and 2 of this table. Damper failure to open is not listed since the damper has no safety function to open for DBE mitigation.

Table 6.2.3-3 Failure Modes and Effects Analysis For Passive Failure for the ABGTS (Page 8 of 27)

ITEM NO.	COMPONENT	FUNCTION	FAILURE MODE	POTENTIAL CAUSE	METHOD OF DETECTION	EFFECT ON SYSTEM	EFFECT ON PLANT	REMARKS
12	Isolation Damper 0-FCO-30-141 Train B	Closes on ABI or high rad in refueling area signal to isolate Fuel Handling Area Exhaust Fan B-B and to establish boundary for ABGTS.	Stuck open, fails to close, or spuriously opens.	Mechanical failure; hot short in control wiring; Train B ABI or high rad in refueling area signal failure; HS failure to spring return from open to A-Auto.	Indicating light in the MCR.	Loss of redundancy in isolation of Fuel Handling Area Exhaust Fan B-B.	None. Train A Damper 0-FCO-30-140 provides isolation and maintains the ABSCE.	Damper fails closed on loss of Train B 125 Vdc power. Train A (0-FCO-30-140) and Train B (0-FCO-30-141) dampers, in series, are provided with non-safety control air and both dampers fail closed on loss of control air. Independence of Train A and Train B isolation signals is discussed in "Remarks" under Items 1 and 2 of this table. Damper failure to open is not listed since the damper has no safety function to open for DBE mitigation.
13	Isolation Damper 2-FCO-30-21 Train A	Closes on ABI or high rad in refueling area signal to isolate AB Gen Supply Fans 2A-A and 2B-B and to establish boundary for ABGTS.	Stuck open, fails to close, or spuriously opens.	Mechanical failure; hot short in control wiring; Train A ABI or high rad in refueling area signal failure; HS failure to spring return from open to A-Auto.	Indicating light in the MCR.	Loss of redundancy in isolation of part of ductwork on Unit 2 side of AB.	None. Train B Damper 2-FCO-30-22 provides isolation and maintains the ABSCE.	Damper fails closed on loss of Train A 125 Vdc power. Train A (2-FCO-30-21) and Train B (2-FCO-30-22) dampers, in series, are provided with non-safety control air and both dampers fail closed on loss of control air. Independence of Train A and Train B isolation signals is discussed in "Remarks" under Items 1 and 2 of this table. Damper failure to open is not listed since the damper has no safety function to open for DBE mitigation.

Table 6.2.3-3 Failure Modes and Effects Analysis For Passive Failure for the ABGTS (Page 9 of 27)

ITEM NO.	COMPONENT	FUNCTION	FAILURE MODE	POTENTIAL CAUSE	METHOD OF DETECTION	EFFECT ON SYSTEM	EFFECT ON PLANT	REMARKS
14	Isolation Damper 2-FCO-30-22 Train B	Closes on ABI or high rad in refueling area signal to isolate AB Gen Supply Fans 2A-A and 2B-B and to establish boundary for ABGTS.	Stuck open, fails to close, or spuriously opens.	Mechanical failure; hot short in control wiring; Train B ABI or high rad in refueling area signal failure; HS failure to spring return from open to A-Auto.	Indicating light in the MCR.	Loss of redundancy in isolation of part of ductwork on Unit 2 side of AB.	None. Train A Damper 2-FCO-30-21 provides isolation and maintains the ABSCE.	Damper fails closed on loss of Train B 125 Vdc power. Train A (2-FCO-30-21) and Train B (2-FCO-30-22) dampers, in series, are provided with non-safety control air and both dampers fail closed on loss of control air. Independence of Train A and Train B isolation signals is discussed in "Remarks" under Items 1 and 2 of this table. Damper failure to open is not listed since the damper has no safety function to open for DBE mitigation.
15	Isolation Damper 1-FCO-30-86 Train A	Closes on ABI or high rad in refueling area signal to isolate AB Gen Supply Fans 1A-A and 1B-B and to establish boundary for ABGTS.	Stuck open, fails to close, or spuriously opens.	Mechanical failure; hot short in control wiring; Train A ABI or high rad in refueling area signal failure; HS failure to spring return from open to A-Auto.	Indicating light in the MCR.	Loss of redundancy in isolation of part of ductwork on Unit 1 side of AB.	None. Train B Damper 1-FCO-30-87 provides isolation and maintains the ABSCE.	Damper fails closed on loss of Train A 125 Vdc power. Train A (1-FCO-30-86) and Train B (1-FCO-30-87) dampers, in series, are provided with non-safety control air and both dampers fail closed on loss of control air. Independence of Train A and Train B isolation signals is discussed in "Remarks" under Items 1 and 2 of this table. Damper failure to open is not listed since the damper has no safety function to open for DBE mitigation.

Table 6.2.3-3 Failure Modes and Effects Analysis For Passive Failure for the ABGTS (Page 10 of 27)

ITEM NO.	COMPONENT	FUNCTION	FAILURE MODE	POTENTIAL CAUSE	METHOD OF DETECTION	EFFECT ON SYSTEM	EFFECT ON PLANT	REMARKS
16	Isolation Damper 1-FCO-30-87 Train B	Closes on ABI or high rad in refueling area signal to isolate AB Gen Supply Fans 1A-A and 1B-B and to establish boundary for ABGTS.	Stuck open, fails to close, or spuriously opens.	Mechanical failure; hot short in control wiring; Train B ABI or high rad in refueling area signal failure; HS failure to spring return from open to A-Auto.	Indicating light in the MCR.	Loss of redundancy in isolation of part of ductwork on Unit 1 side of AB.	None. Train A Damper 1-FCO-30-86 provides isolation and maintains the ABSCE.	Damper fails closed on loss of Train B 125 Vdc power. Train A (1-FCO-30-86) and Train B (1-FCO-30-87) dampers, in series, are provided with non-safety control air and both dampers fail closed on loss of control air. Independence of Train A and Train B isolation signals is discussed in "Remarks" under Items 1 and 2 of this table. Damper failure to open is not listed since the damper has no safety function to open for DBE mitigation.
17	Isolation Damper 1-FCO-30-106 Train A	Closes on ABI or high rad in refueling area signal to isolate AB Gen Supply Fans 1A-A and 1B-B and to establish boundary for ABGTS.	Stuck open, fails to close, or spuriously opens.	Mechanical failure; hot short in control wiring; Train A ABI or high rad in refueling area signal failure; HS failure to spring return from open to A-Auto.	Indicating light in the MCR.	Loss of redundancy in isolation of part of ductwork on Unit 1 side of AB.	None. Train B Damper 1-FCO-30-107 provides isolation and maintains the ABSCE.	Damper fails closed on loss of Train A 125 Vdc power. Train A (1-FCO-30-106) and Train B (1-FCO-30-107) dampers, in series, are provided with non-safety control air and both dampers fail closed on loss of control air. Independence of Train A and Train B isolation signals is discussed in "Remarks" under Items 1 and 2 of this table. Damper failure to open is not listed since the damper has no safety function to open for DBE mitigation.

Table 6.2.3-3 Failure Modes and Effects Analysis For Passive Failure for the ABGTS (Page 11 of 27)

ITEM NO.	COMPONENT	FUNCTION	FAILURE MODE	POTENTIAL CAUSE	METHOD OF DETECTION	EFFECT ON SYSTEM	EFFECT ON PLANT	REMARKS
18	Isolation Damper 1-FCO-30-107 Train B	Closes on ABI or high rad in refueling area signal to isolate AB Gen Supply Fans 1A-A and 1B-B and to establish boundary for ABGTS.	Stuck open, fails to close, or spuriously opens.	Mechanical failure; hot short in control wiring; Train B ABI or high rad in refueling area signal failure; HS failure to spring return from open to A-Auto.	Indicating light in the MCR.	Loss of redundancy in isolation of part of ductwork on Unit 1 side of AB.	None. Train A Damper 1-FCO-30-106 provides isolation and maintains the ABSCE.	Damper fails closed on loss of Train B 125 Vdc power. Train A (1-FCO-30-106) and Train B (1-FCO-30-107) dampers, in series, are provided with non-safety control air and both dampers fail closed on loss of control air. Independence of Train A and Train B isolation signals is discussed in "Remarks" under Items 1 and 2 of this table. Damper failure to open is not listed since the damper has no safety function to open for DBE mitigation.
19	Isolation Damper 2-FCO-30-108 Train A	Closes on ABI or high rad in refueling area signal to isolate AB Gen Supply Fans 2A-A and 2B-B and to establish boundary for ABGTS.	Stuck open, fails to close, or spuriously opens.	Mechanical failure; hot short in control wiring; Train A ABI or high rad in refueling area signal failure; HS failure to spring return from open to A-Auto.	Indicating light in the MCR.	Loss of redundancy in isolation of part of ductwork on Unit 2 side of AB.	None. Train B Damper 2-FCO-30-109 provides isolation and maintains the ABSCE.	Damper fails closed on loss of Train A 125 Vdc power. Train A (2-FCO-30-108) and Train B (2-FCO-30-109) dampers, in series, are provided with non-safety control air and both dampers fail closed on loss of control air. Independence of Train A and Train B isolation signals is discussed in "Remarks" under Items 1 and 2 of this table. Damper failure to open is not listed since the damper has no safety function to open for DBE mitigation.

Table 6.2.3-3 Failure Modes and Effects Analysis For Passive Failure for the ABGTS (Page 12 of 27)

ITEM NO.	COMPONENT	FUNCTION	FAILURE MODE	POTENTIAL CAUSE	METHOD OF DETECTION	EFFECT ON SYSTEM	EFFECT ON PLANT	REMARKS
20	Isolation Damper 2-FCO-30-109 Train B	Closes on ABI or high rad in refueling area signal to isolate AB Gen Supply Fans 2A-A and 2B-B and to establish boundary for ABGTS.	Stuck open, fails to close, or spuriously opens.	Mechanical failure; hot short in control wiring; Train B ABI or high rad in refueling area signal failure; HS failure to spring return from open to A-Auto.	Indicating light in the MCR.	Loss of redundancy in isolation of part of ductwork on Unit 2 side of AB.	None. Train A Damper 2-FCO-30-108 provides isolation and maintains the ABSCE.	Damper fails closed on loss of Train B 125 Vdc power. Train A (2-FCO-30-108) and Train B (2-FCO-30-109) dampers, in series, are provided with non-safety control air and both dampers fail closed on loss of control air. Independence of Train A and Train B isolation signals is discussed in "Remarks" under Items 1 and 2 of this table. Damper failure to open is not listed since the damper has no safety function to open for DBE mitigation.
21	Isolation Damper 1-FCO-30-160 Train A	Closes on ABI or high rad in refueling area signal to isolate AB Gen Exhaust Fan 1A-A suction and to establish boundary for ABGTS.	Stuck open, fails to close, or spuriously opens.	Mechanical failure; hot short in control wiring; Train A ABI or high rad in refueling area signal failure; HS failure to spring return from open to A-Auto.	Indicating light in the MCR.	Loss of redundancy in isolation of AB Gen Exhaust Fan 1A-A.	None. Train B Damper 1-FCO-30-161 provides isolation and maintains the ABSCE.	Damper fails closed on loss of Train A 125 Vdc power. Train A (1-FCO-30-160) and Train B (1-FCO-30-161) dampers, in series, are provided with non-safety control air and both dampers fail closed on loss of control air. Independence of Train A and Train B isolation signals is discussed in "Remarks" under Items 1 and 2 of this table. Damper failure to open is not listed since the damper has no safety function to open for DBE mitigation.

Table 6.2.3-3 Failure Modes and Effects Analysis For Passive Failure for the ABGTS (Page 13 of 27)

ITEM NO.	COMPONENT	FUNCTION	FAILURE MODE	POTENTIAL CAUSE	METHOD OF DETECTION	EFFECT ON SYSTEM	EFFECT ON PLANT	REMARKS
22	Isolation Damper 1-FCO-30-161 Train B	Closes on ABI or high rad in refueling area signal to isolate AB Gen Exhaust Fan 1A-A suction and to establish boundary for ABGTS.	Stuck open, fails to close, or spuriously opens.	Mechanical failure; hot short in control wiring; Train B ABI or high rad in refueling area signal failure; HS failure to spring return from open to A-Auto.	Indicating light in the MCR.	Loss of redundancy in isolation of AB Gen Exhaust Fan 1A-A.	None. Train A Damper 1-FCO-30-160 provides isolation and maintains the ABSCE.	Damper fails closed on loss of Train B 125 Vdc power. Train B (1-FCO-30-160) and Train B (1-FCO-30-161) dampers, in series, are provided with non-safety control air and both dampers fail closed on loss of control air. Independence of Train A and Train B isolation signals is discussed in "Remarks" under Items 1 and 2 of this table. Damper failure to open is not listed since the damper has no safety function to open for DBE mitigation.
23	Isolation Damper 1-FCO-30-166 Train A	Closes on ABI or high rad in refueling area signal to isolate AB Gen Exhaust Fan 1B-B suction and to establish boundary for ABGTS.	Stuck open, fails to close, or spuriously opens.	Mechanical failure; hot short in control wiring; Train A ABI or high rad in refueling area signal failure; HS failure to spring return from open to A-Auto.	Indicating light in the MCR.	Loss of redundancy in isolation of AB Gen Exhaust Fan 1B-B.	None. Train B Damper 1-FCO-30-167 provides isolation and maintains the ABSCE.	Damper fails closed on loss of Train A 125 Vdc power. Train A (1-FCO-30-166) and Train B (1-FCO-30-167) dampers, in series, are provided with non-safety control air and both dampers fail closed on loss of control air. Independence of Train A and Train B isolation signals is discussed in "Remarks" under Items 1 and 2 of this table. Damper failure to open is not listed since the damper has no safety function to open for DBE mitigation.

Table 6.2.3-3 Failure Modes and Effects Analysis For Passive Failure for the ABGTS (Page 14 of 27)

ITEM NO.	COMPONENT	FUNCTION	FAILURE MODE	POTENTIAL CAUSE	METHOD OF DETECTION	EFFECT ON SYSTEM	EFFECT ON PLANT	REMARKS
24	Isolation Damper 1-FCO-30-167 Train B	Closes on ABI or high rad in refueling area signal to isolate AB Gen Exhaust Fan 1B-B suction and to establish boundary for ABGTS.	Stuck open, fails to close, or spuriously opens.	Mechanical failure; hot short in control wiring; Train B ABI or high rad in refueling area signal failure; HS failure to spring return from open to A-Auto.	Indicating light in the MCR.	Loss of redundancy in isolation of AB Gen Exhaust Fan 1B-B.	None. Train A Damper 1-FCO-30-166 provides isolation and maintains the ABSCE.	Damper fails closed on loss of Train B 125 Vdc power. Train A (1-FCO-30-166) and Train B (1-FCO-30-167) dampers, in series, are provided with non-safety control air and both dampers fail closed on loss of control air. Independence of Train A and Train B isolation signals is discussed in "Remarks" under Items 1 and 2 of this table. Damper failure to open is not listed since the damper has no safety function to open for DBE mitigation.
25	Isolation Damper 2-FCO-30-271 Train A	Closes on ABI or high rad in refueling area signal to isolate AB Gen Exhaust Fan 2A-A suction and to establish boundary for ABGTS.	Stuck open, fails to close, or spuriously opens.	Mechanical failure; hot short in control wiring; Train A ABI or high rad in refueling area signal failure; HS failure to spring return from open to A-Auto.	Indicating light in the MCR.	Loss of redundancy in isolation of AB Gen Exhaust Fan 2A-A.	None. Train B Damper 2-FCO-30-272 provides isolation and maintains the ABSCE.	Damper fails closed on loss of Train A 125 Vdc power. Train A (2-FCO-30-271) and Train B (2-FCO-30-272) dampers, in series, are provided with non-safety control air and both dampers fail closed on loss of control air. Independence of Train A and Train B isolation signals is discussed in "Remarks" under Items 1 and 2 of this table. Damper failure to open is not listed since the damper has no safety function to open for DBE mitigation.

Table 6.2.3-3 Failure Modes and Effects Analysis For Passive Failure for the ABGTS (Page 15 of 27)

ITEM NO.	COMPONENT	FUNCTION	FAILURE MODE	POTENTIAL CAUSE	METHOD OF DETECTION	EFFECT ON SYSTEM	EFFECT ON PLANT	REMARKS
26	Isolation Damper 2-FCO-30-272 Train B	Closes on ABI or high rad in refueling area signal to isolate AB Gen Exhaust Fan 2A-A suction and to establish boundary for ABGTS.	Stuck open, fails to close, or spuriously opens.	Mechanical failure; hot short in control wiring; Train B ABI or high rad in refueling area signal failure; HS failure to spring return from open to A-Auto.	Indicating light in the MCR.	Loss of redundancy in isolation of AB Gen Exhaust Fan 2A-A.	None. Train A Damper 2-FCO-30-271 provides isolation and maintains the ABSCE.	Damper fails closed on loss of Train B 125 Vdc power. Train A (2-FCO-30-271) and Train B (2-FCO-30-272) dampers, in series, are provided with non-safety control air and both dampers fail closed on loss of control air. Independence of Train A and Train B isolation signals is discussed in "Remarks" under Items 1 and 2 of this table. Damper failure to open is not listed since the damper has no safety function to open for DBE mitigation.
27	Isolation Damper 2-FCO-30-275 Train A	Closes on ABI or high rad in refueling area signal to isolate AB Gen Exhaust Fan 2B-B suction and Exhaust Fan B-B and to establish boundary for ABGTS.	Stuck open, fails to close, or spuriously opens.	Mechanical failure; hot short in control wiring; Train A ABI or high rad in refueling area signal failure; HS failure to spring return from open to A-Auto.	Indicating light in the MCR.	Loss of redundancy in isolation of AB Gen Exhaust Fan 2B-B.	None. Train B Damper 2-FCO-30-276 provides isolation and maintains the ABSCE.	Damper fails closed on loss of Train A 125 Vdc power. Train A (2-FCV-30-275) and Train B (2-FCV-30-276) dampers, in series, are provided with non-safety control air and both dampers fail closed on loss of control air. Independence of Train A and Train B isolation signals is discussed in "Remarks" under Items 1 and 2 of this table. Damper failure to open is not listed since the damper has no safety function to open for DBE mitigation.

Table 6.2.3-3 Failure Modes and Effects Analysis For Passive Failure for the ABGTS (Page 16 of 27)

ITEM NO.	COMPONENT	FUNCTION	FAILURE MODE	POTENTIAL CAUSE	METHOD OF DETECTION	EFFECT ON SYSTEM	EFFECT ON PLANT	REMARKS
28	Isolation Damper 2-FCO-30-276 Train B	Closes on ABI or high rad in refueling area signal to isolate AB Gen Exhaust Fan 2B-B suction area and to establish boundary for ABGTS.	Stuck open, fails to close, or spuriously opens.	Mechanical failure; hot short in control wiring; Train B ABI or high rad in refueling area signal failure; HS failure to spring return from open to A-Auto.	Indicating light in the MCR.	Loss of redundancy in isolation of AB Gen Exhaust Fan 2B-B.	None. Train A Damper 2-FCO-30-275 provides isolation and maintains the ABSCE.	Damper fails closed on loss of Train B 125 Vdc power. Train A (2-FCV-30-275) and Train B (2-FCV-30-276) dampers, in series, are provided with non-safety control air and both dampers fail closed on loss of control air. Independence of Train A and Train B isolation signals is discussed in "Remarks" under Items 1 and 2 of this table. Damper failure to open is not listed since the damper has no safety function to open for DBE mitigation.
29	Isolation Damper 1,2-FCO-30-294 Train A**	Closes on ABI or high rad in refueling area signal to isolate Purge Air Supply Fan inlet duct and to establish boundary for ABGTS.	Stuck open, fails to close, or spuriously opens.	Mechanical failure; hot short in control wiring; Train A ABI or high rad in refueling area signal failure; HS failure to spring return from open to A-Auto.	Indicating light in the MCR.	Loss of redundancy in isolation of Purge Air Supply Fan inlet duct.	None. Train B Damper 1,2-FCO-30-295 provides isolation and maintains the ABSCE.	Damper fails closed on loss of Train A 125 Vdc power. Train A (1,2-FCV-30-294) and Train B (1,2-FCV-30-295) dampers, in series, are provided with non-safety control air and both dampers fail closed on loss of control air. Independence of Train A and Train B isolation signals is discussed in "Remarks" under Items 1 and 2 of this table. Solenoid circuits for 1,2-FCO-30-294 and 1,2-FCO-30-295 are independent, with trained Class 1E power and trained ABI signal. Damper failure to open is not listed since the damper has no safety function to open for DBE mitigation.

** Unit 2 component, 2-FCO-30-294, was added for dual unit operation.

Table 6.2.3-3 Failure Modes and Effects Analysis For Passive Failure for the ABGTS (Page 17 of 27)

ITEM NO.	COMPONENT	FUNCTION	FAILURE MODE	POTENTIAL CAUSE	METHOD OF DETECTION	EFFECT ON SYSTEM	EFFECT ON PLANT	REMARKS
30	Isolation Damper 1,2-FCO-30-295 Train B**	Closes on ABI or high rad in refueling area signal to isolate Purge Air Supply Fan inlet duct and to establish boundary for ABGTS.	Stuck open, fails to close, or spuriously opens.	Mechanical failure; hot short in control wiring; Train B ABI or high rad in refueling area signal failure; HS failure to spring return from open to A-Auto.	Indicating light in the MCR.	Loss of redundancy in isolation of Purge Air Supply Fan inlet duct.	None. Train A Damper 1,2-FCO-30-294 provides isolation and maintains the ABSCE.	Damper fails closed on loss of Train B 125 Vdc power. Train A (1,2-FCV-30-294) and Train B (1,2-FCV-30-295) dampers, in series, are provided with non-safety control air and both dampers fail closed on loss of control air. Independence of Train A and Train B isolation signals is discussed in "Remarks" under Items 1 and 2 of this table. Solenoid circuits for 1,2-FCO-30-294 and 1,2-FCO-30-295 are independent, with trained Class 1E power and trained ABI signal. Damper failure to open is not listed since the damper has no safety function to open for DBE mitigation.
31	Isolation Damper 0-FCO-30-122 Train A	Closes on ABI or high rad in refueling area signal to isolate the cask loading area exhaust and to establish boundary for ABGTS.	Stuck open, fails to close, or spuriously opens.	Mechanical failure; hot short in control wiring; Train A ABI or high rad in refueling area signal failure; HS failure to spring return from open to A-Auto. Damper re-opens on loss (or RESET) of ABI signal.	Indicating light in the MCR.	Loss of redundancy in isolation of cask loading area exhaust.	None. Train B Damper 0-FCO-30-123 provides isolation and maintains the ABSCE.	Damper fails closed on loss of Train A 125 Vdc power. Train A (0-FCO-30-122) and Train B (0-FCO-30-123) dampers, in series, are provided with non-safety control air and both dampers fail closed on loss of control air. Independence of Train A and Train B isolation signals is discussed in "Remarks" under Items 1 and 2 of this table. Damper failure to open is not listed since the damper has no safety function to open for DBE mitigation.

** Unit 2 component, 2-FCO-30-294, was added for dual unit operation.

Table 6.2.3-3 Failure Modes and Effects Analysis For Passive Failure for the ABGTS (Page 18 of 27)

ITEM NO.	COMPONENT	FUNCTION	FAILURE MODE	POTENTIAL CAUSE	METHOD OF DETECTION	EFFECT ON SYSTEM	EFFECT ON PLANT	REMARKS
32	Isolation Damper 0-FCO-30-123 Train B	Closes on ABI or high rad in refueling area signal to isolate the cask loading area exhaust and to establish boundary for ABGTS.	Stuck open, fails to close, or spuriously opens.	Mechanical failure; hot short in control wiring; Train B ABI or high rad in refueling area signal failure; HS failure to spring return from open to A-Auto. Damper re-opens on loss (or RESET) of ABI signal.	Indicating light in the MCR.	Loss of redundancy in isolation of cask loading area exhaust.	None. Train A Damper 0-FCO-30-122 provides isolation and maintains the ABSCE.	Damper fails closed on loss of Train B 125 Vdc power. Train A (0-FCO-30-122) and Train B (0-FCO-30-123) dampers, in series, are provided with non-safety control air and both dampers fail closed on loss of control air. Independence of Train A and Train B isolation signals is discussed in "Remarks" under Items 1 and 2 of this table. Damper failure to open is not listed since the damper has no safety function to open for DBE mitigation.
33	Isolation Damper 0-FCO-30-129 Train A	Closes on ABI or high rad in refueling area signal to isolate the cask loading area supply and to establish boundary for ABGTS.	Stuck open, fails to close, or spuriously opens.	Mechanical failure; hot short in control wiring; Train A ABI or high rad in refueling area signal failure; HS failure to spring return from open to A-Auto.	Indicating light in the MCR.	Loss of redundancy in isolation of cask loading area supply.	None. Train B Damper 0-FCO-30-130 provides isolation and maintains the ABSCE.	Damper fails closed on loss of Train A 125 Vdc power. Train A (0-FCO-30-129) and Train B (0-FCO-30-130) dampers, in series, are provided with non-safety control air and both dampers fail closed on loss of control air. Independence of Train A and Train B isolation signals is discussed in "Remarks" under Items 1 and 2 of this table. Damper failure to open is not listed since the damper has no safety function to open for DBE mitigation.

Table 6.2.3-3 Failure Modes and Effects Analysis For Passive Failure for the ABGTS (Page 19 of 27)

ITEM NO.	COMPONENT	FUNCTION	FAILURE MODE	POTENTIAL CAUSE	METHOD OF DETECTION	EFFECT ON SYSTEM	EFFECT ON PLANT	REMARKS
34	Isolation Damper 0-FCO-30-130 Train B	Closes on ABI or high rad in refueling area signal to isolate the cask loading area supply and to establish boundary for ABGTS.	Stuck open, fails to close, or spuriously opens.	Mechanical failure; hot short in control wiring; Train B ABI or high rad in refueling area signal failure; HS failure to spring return from open to A-Auto.	Indicating light in the MCR.	Loss of redundancy in isolation of cask loading area supply.	None. Train A Damper 0-FCO-30-129 provides isolation and maintains the ABSCE.	Damper fails closed on loss of Train B 125 Vdc power. Train A (0-FCO-30-129) and Train B (0-FCO-30-130) dampers, in series, are provided with non-safety control air and both dampers fail closed on loss of control air. Independence of Train A and Train B isolation signals is discussed in "Remarks" under Items 1 and 2 of this table. Damper failure to open is not listed since the damper has no safety function to open for DBE mitigation.
35	Isolation Damper 0-FCO-31-350 Train A	Closes on ABI or high rad in refueling area signal to isolate PASF outside air intake and to establish boundary for ABGTS.	Stuck open, fails to close, or spuriously opens.	Mechanical failure; hot short in control wiring; Train A ABI or high rad in refueling area signal failure; HS failure to spring return from open to A-Auto.	Indicating light in the MCR.	Loss of redundancy in isolation of PASF outside air intake.	None. Train B Damper 0-FCO-31-365 provides isolation and maintains the ABSCE.	Damper fails closed on loss of Train A 125 Vdc power. Train A (0-FCO-31-350) and Train B (0-FCO-31-365) dampers are in series. Independence of Train A and Train B isolation signals is discussed in "Remarks" under Items 1 and 2 of this table. Damper failure to open is not listed since the damper has no safety function to open for DBE mitigation.

Table 6.2.3-3 Failure Modes and Effects Analysis For Passive Failure for the ABGTS (Page 20 of 27)

ITEM NO.	COMPONENT	FUNCTION	FAILURE MODE	POTENTIAL CAUSE	METHOD OF DETECTION	EFFECT ON SYSTEM	EFFECT ON PLANT	REMARKS
36	Isolation Damper 0-FCO-31-365 Train B	Closes on ABI or high rad in refueling area signal to isolate PASF outside air intake and to establish boundary for ABGTS.	Stuck open, fails to close, or spuriously opens.	Mechanical failure; hot short in control wiring; Train B ABI or high rad in refueling area signal failure; HS failure to spring return from open to A-Auto.	Indicating light in the MCR.	Loss of redundancy in isolation of PASF outside air intake.	None. Train A Damper 0-FCO-31-350 provides isolation and maintains the ABSCE.	Damper fails closed on loss of Train B 125 Vdc power. Train A (0-FCV-31-350) and Train B (0-FCV-31-365) dampers are in series. Independence of Train A and Train B isolation signals is discussed in "Remarks" under Items 1 and 2 of this table. Damper failure to open is not listed since the damper has no safety function to open for DBE mitigation.
37	Isolation Damper 1,2-FCO-31-342 Train A	Closes on ABI or high rad in refueling area signal to isolate PASF Room No. 1 exhaust and to establish boundary for ABGTS.	Stuck open, fails to close, or spuriously opens.	Mechanical failure; hot short in control wiring; Train A ABI or high rad in refueling area signal failure; HS failure to spring return from open to A-Auto.	Indicating light in the MCR.	Loss of redundancy in isolation of PASF Room No. 1 exhaust.	None. Train B Damper 1,2-FCO-31-343 provides isolation and maintains the ABSCE.	Damper fails closed on loss of Train A 125 Vdc power. Train A (1,2-FCO-31-342) and Train B (1,2-FCO-31-343) dampers are in series. Independence of Train A and Train B isolation signals is discussed in "Remarks" under Items 1 and 2 of this table. Damper failure to open is not listed since the damper has no safety function to open for DBE mitigation.
38	Isolation Damper 1,2-FCO-31-343 Train B	Closes on ABI or high rad in refueling area signal to isolate PASF Room No. 1 exhaust and to establish boundary for ABGTS.	Stuck open, fails to close, or spuriously opens.	Mechanical failure; hot short in control wiring; Train B ABI or high rad in refueling area signal failure; HS failure to spring return from open to A-Auto.	Indicating light in the MCR.	Loss of redundancy in isolation of PASF Room No. 1 exhaust.	None. Train A Damper 1,2-FCO-31-342 provides isolation and maintains the ABSCE.	Damper fails closed on loss of Train B 125 Vdc power. Train A (1,2-FCO-31-342) and Train B (1,2-FCO-31-343) dampers are in series. Independence of Train A and Train B isolation signals is discussed in "Remarks" under Items 1 and 2 of this table. Damper failure to open is not listed since the damper has no safety function to open for DBE mitigation.

Table 6.2.3-3 Failure Modes and Effects Analysis For Passive Failure for the ABGTS (Page 21 of 27)

ITEM NO.	COMPONENT	FUNCTION	FAILURE MODE	POTENTIAL CAUSE	METHOD OF DETECTION	EFFECT ON SYSTEM	EFFECT ON PLANT	REMARKS
39	Modulating Damper 0-FCO-30-149 Train A	Regulates the amount of outside air to maintain ABSCE at -0.25 in w.g.	Allows more outside air than required (stuck open or spuriously excessive)	Train A vital ac power failure; Train A aux. control air failure; spurious high dP signal; failure of E/I or I/P converter; positioner mechanical failure.	"Hi Press. in Aux. Bldg." alarm.	See "Remarks" column.	None. See "Remarks" column.	ABI signal stops AB gen supply fans automatically. The Aux. Bldg. is designed for minimum leakage and, with at least one ABGTS exhaust fan running, failure of the modulating damper can cause pressure in the Aux. Bldg. to approach outside pressure, but the AB pressure cannot become positive with respect to the outside. The DPIS used for alarm in the control room is separate and independent from the DPIS used for modulating control of the damper. If the (non-safety) alarm functions, the operator can either close the associated Isolation Damper 0-FCO-30-280 or, if only one ABGTS exhaust fan is in operation, can start the redundant fan to maintain the -0.25 in w.g. pressure.
			Does not allow the required amount of outside air (Stuck closed or spurious inadequate opening).	Train A vital ac power failure; Train A aux. control air failure; spurious dP signal; from 0-FCO-30-149; failure of E/I or I/P converter; positioner mechanical failure.		None. Train B Modulating Damper 0-FCO-30-148 will open to allow sufficient outside air to control the negative pressure.	None (See note on items 3 and 4.)	Modulating Dampers 0-FCO-30-148 and 0-FCO-30-149 are provided with train-separated, safety-grade auxiliary control air.

Table 6.2.3-3 Failure Modes and Effects Analysis For Passive Failure for the ABGTS (Page 22 of 27)

ITEM NO.	COMPONENT	FUNCTION	FAILURE MODE	POTENTIAL CAUSE	METHOD OF DETECTION	EFFECT ON SYSTEM	EFFECT ON PLANT	REMARKS
40	Modulating Damper 0-FCO-30-148 Train B	Regulates the amount of outside air to maintain ABSCE at -0.25 in w.g.	Allows more outside air than required (stuck open or spuriously excessive opening).	Train B vital ac power failure; Train B aux. control air failure; spurious high dP signal; failure of E/I or I/P converter; positioner mechanical failure.	"Hi Press. in Aux. Bldg." alarm.	See "Remarks" column.	None. See "Remarks" column.	ABI signal stops AB gen supply fans automatically. The Aux. Bldg. is designed for minimum leakage and, with no air coming in and with at least one ABGTS exhaust fan running, failure of the modulating damper can result in pressure in the Aux. Bldg. approaching outside pressure, but the AB pressure cannot become positive with respect to the outside. The DPIS used for alarm in the control room is separate and independent from the DPIS used for modulating control of the damper. If the (non-safety) alarm functions, operator can either close the associated Isolation Damper 0-FCO-30-280 or, if only one ABGTS exhaust fan is in operation, can start the redundant fan to maintain -0.25 in w.g.
			Does not allow the required amount of outside air (Stuck closed or spurious inadequate opening).	Train B vital ac power failure; Train B aux. control air failure; spurious dP signal; from 0-FCO-30-149; failure of E/I or I/P converter; positioner mechanical failure.		None. Train A Modulating Damper 0-FCO-30-149 will open to allow sufficient outside air to control the negative pressure.	None (See note on items 3 and 4.)	Modulating Dampers 0-FCO-30-148 and 0-FCO-30-149 are provided with train-separated, safety-grade auxiliary control air.

Table 6.2.3-3 Failure Modes and Effects Analysis For Passive Failure for the ABGTS (Page 23 of 27)

ITEM NO.	COMPONENT	FUNCTION	FAILURE MODE	POTENTIAL CAUSE	METHOD OF DETECTION	EFFECT ON SYSTEM	EFFECT ON PLANT	REMARKS
41	ABGTS Vacuum Relief Line Isolation Damper 0-FCO-30-280 Train A	Provides flow path for outside air.	Fails to open, stuck closed, or spuriously closes.	Mechanical failure; Train A power failure; Train A aux. control air failure; operator error (HS in wrong position).	Indicating light in the MCR.	Aux. Bldg. at more negative pressure (lower absolute pressure) than required to prevent leakage from outside.	None. See "Remarks" column.	Dampers 0-FCO-30-279 and 0-FCO-30-280 are provided with train-separated, safety-grade auxiliary control air. In addition, there are two vacuum breaker dampers, 0-DMP-30-1128 and 0-DMP-30-1129 in series which will admit outside air into the Bldg in case of increasing vacuum (more negative pressure).
			Fails to close, stuck open, or spuriously opens.	Mechanical failure; operator error (HS in wrong position).	Indicating light in the MCR.	None. Modulating Damper 0-FCO-30-149 can independently control amount of outside air.	None.	The modulating damper cannot shut off outside air completely. However, the amount of air passed will be insignificant to cause pressure control problem.
42	ABGTS Vacuum Relief Line Isolation Damper 0-FCO-30-279 Train B	Provides flow path for outside air.	Fails to open, stuck closed, or spuriously closes.	Mechanical failure; Train B power failure; Train B aux. control air failure; operator error (HS in wrong position).	Indicating light in the MCR.	Aux. Bldg. at more negative pressure (lower absolute pressure) than required to prevent leakage from outside.	None. See "Remarks" column.	Dampers 0-FCO-30-279 and 0-FCO-30-280 are provided with train-separated, safety-grade auxiliary control air. In addition, there are two vacuum breaker dampers, 0-DMP-30-1128 and 0-DMP-30-1129 in series which will admit outside air into the Bldg in case of increasing vacuum.
			Fails to close, stuck open, or spuriously opens.	Mechanical failure; operator error (HS in wrong position).	Indicating light in the MCR.	None. Modulating Damper 0-FCO-30-148 can independently control amount of outside air.	None	The modulating damper cannot shut off outside air completely. However, the amount of air passed will be insignificant to cause pressure control problem.

Table 6.2.3-3 Failure Modes and Effects Analysis For Passive Failure for the ABGTS (Page 24 of 27)

ITEM NO.	COMPONENT	FUNCTION	FAILURE MODE	POTENTIAL CAUSE	METHOD OF DETECTION	EFFECT ON SYSTEM	EFFECT ON PLANT	REMARKS
43	Train A Emergency Power	Provides Class 1E diesel-backed power supply to active components of Train A of ABGTS.	Loss of or inadequate voltage.	Diesel generator failure; bus fault (Train A); operator error.	Alarm and indication in the MCR.	Loss of redundancy in ABGTS exhaust flow paths.	None. Redundant Train B exhaust fan can maintain required negative pressure.	Train A isolation dampers are not directly affected since damper solenoids and control circuits are supplied either battery power or battery-backed vital ac power. Loss of power to the damper control circuits does not result in loss of redundancy since circuits are such that isolation dampers fail closed.
44	Train B Emergency Power	Provides Class 1E diesel-backed power supply to active components of Train B of ABGTS.	Loss of or inadequate voltage.	Diesel generator failure; bus fault (Train B); operator error.	Alarm and indication in the MCR.	Loss of redundancy in ABGTS exhaust flow paths.	None. Redundant Train A exhaust fan can maintain required negative pressure.	Train B isolation dampers are not directly affected since damper solenoids and control circuits are supplied either battery power or battery-backed vital ac power. Loss of power to the damper control circuits does not result in loss of redundancy since circuits are such that isolation dampers fail closed.
45	Aux. Bldg. vacuum relief damper 0-DMP-30-1128	Provides flow path for outside air.	Fails to open; stuck closed.	Mechanical Failure	Visual	Aux. Bldg at more negative pressure (lower absolute pressure) than required to prevent leakage to outside.	None.	This damper will only be used in the event that isolation dampers 0-DMP-30-279 and 0-DMP-30-280 fail close. Therefore, for this damper to fail close, and one of the isolation dampers to fail close at the same time would constitute a double failure.
			Fails to close, stuck open.	Mechanical Failure	Visual	None. Vacuum relief damper 0-DMP-30-1129 can close independently and eliminate flow path from outside air.		Vacuum relief dampers 0-DMP-30-1128 and 0-DMP-30-1129 are installed in series.

Table 6.2.3-3 Failure Modes and Effects Analysis For Passive Failure for the ABGTS (Page 25 of 27)

ITEM NO.	COMPONENT	FUNCTION	FAILURE MODE	POTENTIAL CAUSE	METHOD OF DETECTION	EFFECT ON SYSTEM	EFFECT ON PLANT	REMARKS
46	Aux. Bldg. vacuum relief damper 0-DMP-30-1129	Provides flow path for outside air.	Fails to open; stuck closed.	Mechanical Failure	Visual	Aux. Bldg. at more negative pressure (lower absolute pressure) than required to prevent leakage to outside.	None.	This damper will only be used in the event that isolation damper 0-DMP-30-279 and 0-DMP-30-280 fail close. Therefore, for this damper to fail close, and one of the isolation dampers to fail close at the same time would constitute a double failure.
			Fails to close; stuck open.	Mechanical Failure	Visual	None. Vacuum relief damper 0-DMP-30-1128 can close independently and eliminate flow path from outside air.	None (See Remarks)	Vacuum relief damper 0-DMP-30-1128 and 0-DMP-30-1129 are installed in series.

Table 6.2.3-3 Failure Modes and Effects Analysis For Passive Failure for the ABGTS (Page 26 of 27)

ITEM NO.	COMPONENT	FUNCTION	FAILURE MODE	POTENTIAL CAUSE	METHOD OF DETECTION	EFFECT ON SYSTEM	EFFECT ON PLANT	REMARKS
47	Fire Dampers 0-ISV-31-3834 and 0-ISV-31-3845	Provide air flow path for common duct between ABGTS fans.	Spurious closure.	Failure of fusible link.	Low flow alarm.	Loss of Train B	None (See Remarks).	Fire dampers are safety-related; their failure constitutes a single failure. Therefore, both ABGTS trains would be available.
48	Deluge System (Spray heads and piping inside ACU A-A or B-B)	Floods the carbon adsorbers in event of fire.	Spurious opening of spray heads, or piping failure	Failure of fusible link. Loss of piping pressure boundary.	-----	None (See Remarks)	None (See Remarks).	Opposite train ACU is independent and remains available, or deluge valve remains closed in the absence of heat detection.
48b	Deluge Valve 1-FCV-26-163	Discharge water in event of fire in carbon adsorbers.	Spurious actuation	- Mechanical failure or - Electrical failure	Local and MCR alarms on water discharge	None (See Remarks)	None (See Remarks)	ACU will not be flooded since the fusible links on the spray heads will be intact due to absence of heat.
48c	Deluge Valve 2-FCV-26-171	Discharge water in event of fire in carbon adsorbers.	Spurious actuation	- Mechanical failure or - Electrical failure	Local and MCR alarms on water discharge	None (See Remarks)	None (See Remarks)	ACU will not be flooded since the fusible links on the spray heads will be intact due to absence of heat.
49	Ductwork in the ABSCE	Provides containment for air flow path.	Leakage.	Cracks.	----	Minimal localized reduction of negative pressure.	None (See Remarks)	Only small cracks are postulated due to seismic qualification. Minimal localized reduction of negative pressure will not affect the ABSCE. Loss of fluid (air) is not a concern since the system is submerged in the same fluid.

Table 6.2.3-3 Failure Modes and Effects Analysis For Passive Failure for the ABGTS (Page 27 of 27)

ITEM NO.	COMPONENT	FUNCTION	FAILURE MODE	POTENTIAL CAUSE	METHOD OF DETECTION	EFFECT ON SYSTEM	EFFECT ON PLANT	REMARKS
50	ABGTS Air Cleanup Unit A Heater	Controls humidity of exhaust air.	Fails to turn on or fails to operate.	Train A power failure; temperature sensing error.	Hi Rad alarm in the MCR for air to Shield Bldg. vent.	Loss of redundancy in ABGTS. Failure of heater will allow humid air into carbon filter reducing its efficiency (see "Remark #3").	None (See Remarks)	1. Failure to cutout is not considered in this table since this is the safe position for controlling air humidity. 2. The air temperature for the switch, 0-TS-30-143, for this heater is sensed by a non-safety related sensor, 0-TE-30-143. DCN M-21750 has been initiated to resolve this problem. Section 8.2 address this further. 3. Heater operation is tested every 31 days per procedure.
51	ABGTS Air Cleanup Unit B Heater	Controls humidity of exhaust air.	Fails to turn on or fails to operate.	Train B power failure; temperature sensing error.	Hi Rad alarm in the MCR for air to Shield Bldg. vent.	Loss of redundancy in ABGTS. Failure of heater will allow humid air into carbon filter reducing its efficiency (see "Remark #3").	None (See Remarks)	1. Failure to cutout is not considered in this table since this is the safe position for controlling air humidity. 2. The air temperature for the switch, 0-TS-30-143, for this heater is sensed by a non-safety related sensor, 0-TE-30-143. DCN M-2175 has been initiated to resolve this problem. Section 8.2 address this further. 3. Heater operation is tested every 31 days per procedure.

Table 6.2.3-3 Failure Modes and Effects Analysis for the ABGTS

NOTES FOR ABGTS FAN FAILURE MODES AND THEIR IMPACT ON THE EGTS			
POST-ACCIDENT TIME INTERVAL	**EGTS**	**ABGTS**	**REMARKS**
0 - 30 minutes	2 fans (auto start)	2 fans (auto start)	2 EGTS fans together produced -2.3” w.g. dP in the annulus more than the dP of -0.69” w.g. effected by the ABGTS fans in ABSCE.
	1 fan operating 1 fan failed	2 fans (auto start)	2 ABGTS fans together pulled a vacuum of -0.69” w.g. @ Elevation 763.0’ of the ABSCE, whereas, 1 EGTS fan drew down the annulus to -1.15” w.g., thus attesting that the annulus dPs are more negative than ABSCE.
	2 fans (auto start)	2 fans (auto start)	2 ABGTS fans together drew down the ABSCE to -1.09” w.g. @ Elevation 763.0’ of the ABSCE, whereas, the 2 EGTS fan together produced -2.3” w.g. in the annulus. Therefore, the annulus dP remains more negative.
	1 fan operating	2 fans (auto start)	The failure of two safety-related components (i.e., fan and a damper affecting the same parameter, namely the annulus dP, is not postulated. Therefore, this failure mode is invalid.
> 30 minutes	1 fan (operating) 1 fan (shutdown by operator)	1 fan (operating) 1 fan (shutdown by operator)	1 EGTS fan produces more negative dP in the annulus than 1 ABGTS fan in the ABSCE
	1 fan (operating)	1 fan (operating)	2 ABGTS fans together produced a dP of -0.69” w.g. @ Elevation 763.0’ of AB; whereas, 1 EGTS fan drew down the annulus to -1.15” w.g. @ Elevation 783.0’. Therefore, the annulus is more negative than ABSCE.
	1 fan (operating) 1 fan (shutdown by operator)	2 fans (operator is yet to shutdown one of the fans) 1 vacuum relief damper failed	2 ABGTS fans together drew down the ABSCE to -1.09” w.g. @ Elevation 763.0’, whereas 1 EGTS fan was able to maintain -1.15” w.g. @ Elevation 783.0’ of the annulus. However, in a later test, the same EGTS fan maintained -1.05’ w.g. However, the dP in the ABSCE remained less negative than that of the annulus.

Table 6.2.3-3 Failure Modes and Effects Analysis for the ABGTS

NOTES FOR ABGTS FAN FAILURE MODES AND THEIR IMPACT ON THE EGTS			
POST-ACCIDENT TIME INTERVAL	**EGTS**	**ABGTS**	**REMARKS**
0 - 30 minutes	2 fans (auto start)	2 fans (auto start)	2 EGTS fans together produced -2.3” w.g. dP in the annulus more than the dP of -0.69” w.g. effected by the ABGTS fans in ABSCE.
	1 fan operating 1 fan failed	2 fans (auto start)	2 ABGTS fans together pulled a vacuum of -0.69” w.g. @ Elevation 763.0 of the ABSCE, whereas, 1 EGTS fan drew down the annulus to -1.15” w.g., thus attesting that the annulus dPs are more negative than ABSCE.
	2 fans (auto start)	2 fans (auto start)	2 ABGTS fans together drew down the ABSCE to -1.09” w.g. @ Elevation 763.0 of the ABSCE, whereas, the 2 EGTS fan together produced -2.3” w.g. in the annulus. Therefore, the annulus dP remains more negative.
	1 fan operating	2 fans (auto start)	The failure of two safety-related components (i.e., fan and a damper affecting the same parameter, namely the annulus dP, is not postulated). Therefore, this failure mode is invalid.

THIS PAGE INTENTIONALLY LEFT BLANK

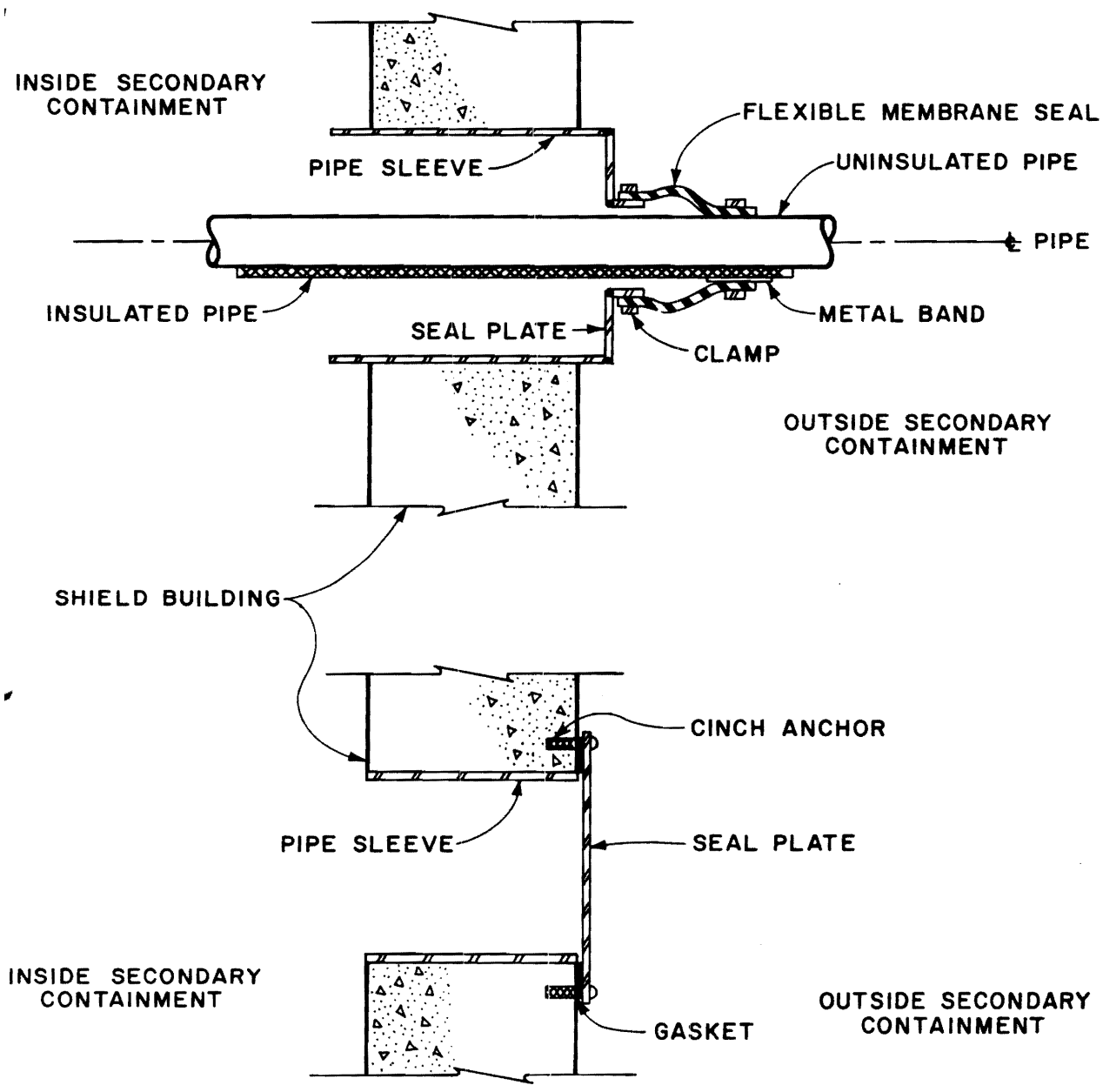

WATTS BAR NUCLEAR PLANT
FINAL SAFETY
ANALYSIS REPORT

TYPICAL MECHANICAL
PENETRATION SEALS
Figure 6.2.3-1

Figure 6.2.3-1 Typical Mechanical Penetration Seals

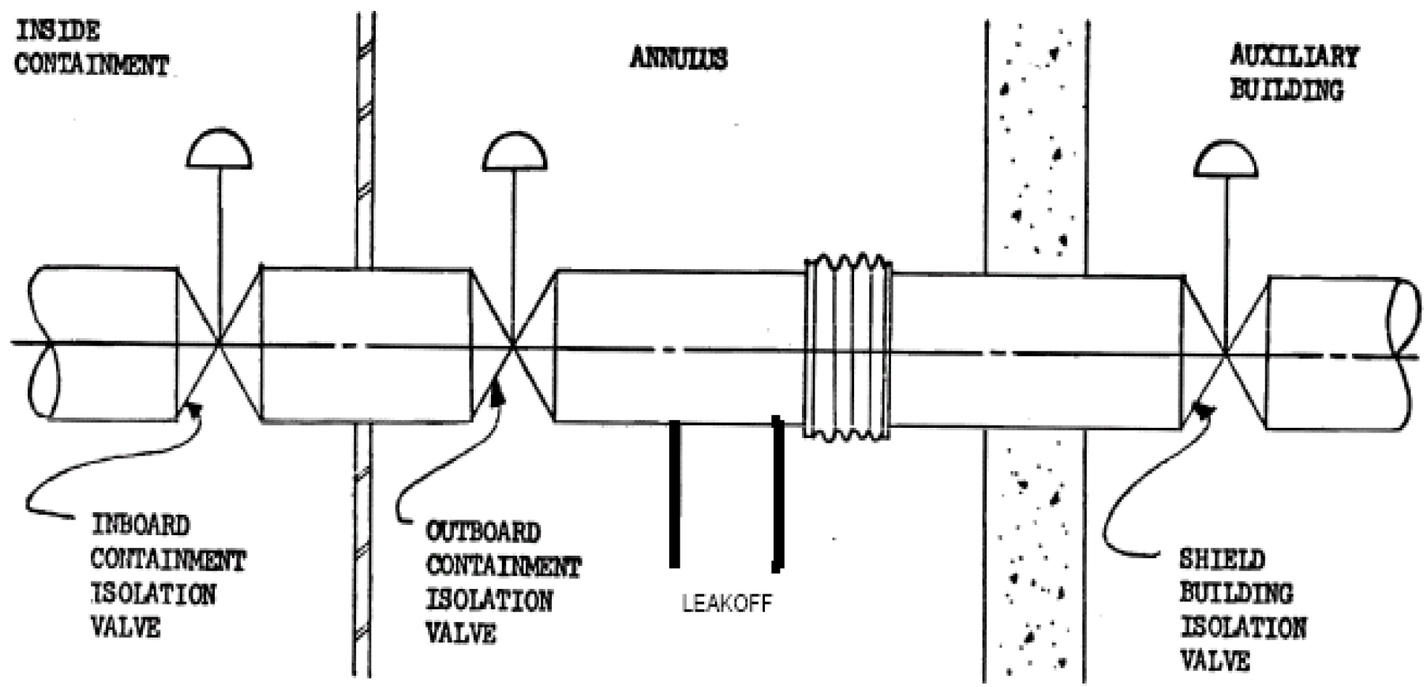

Figure 6.2.3-2 Typical Purge Penetration Arrangement

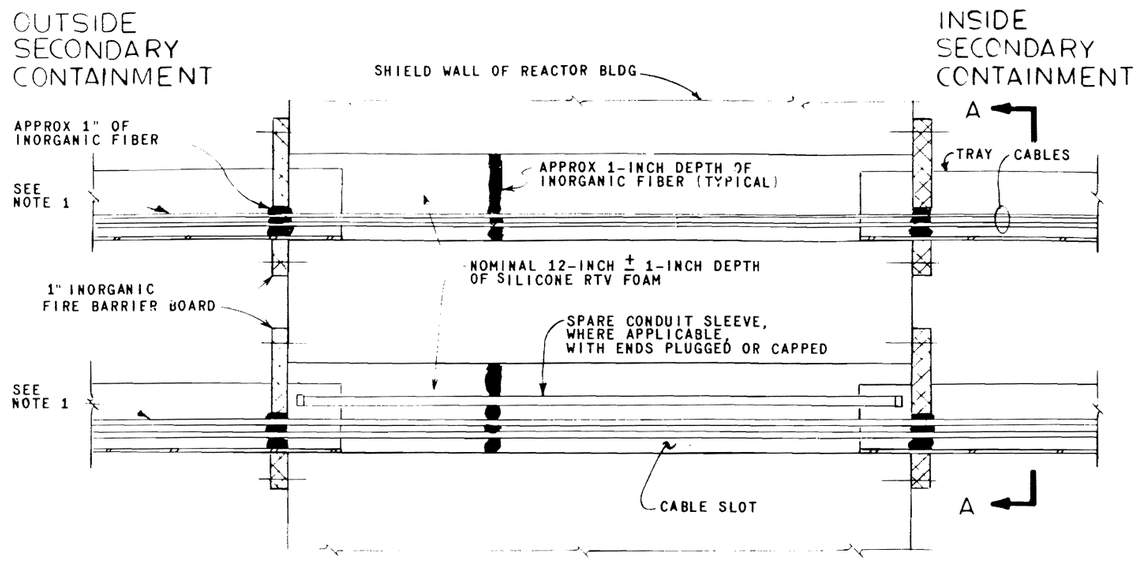

CABLE TRAY PENETRATION

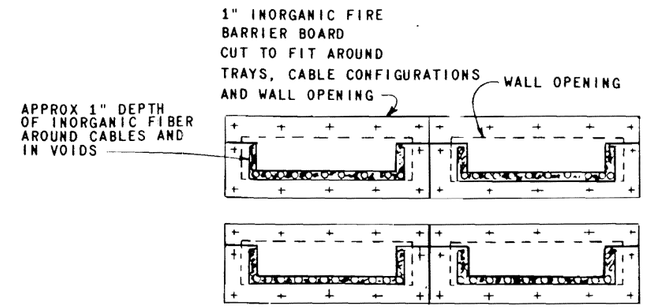

SECTION A-A

NOTES:

1. AFTER FIRE BARRIER BOARD IS IN PLACE, COAT EXPOSED SURFACES OF CABLES FOR A MINIMUM DISTANCE OF 5 FEET FROM FIRE BARRIER BOARD OR TO NEAREST ELECTRICAL PANEL OR ENCLOSURE WITH A 3/16" ± 1/16" (WET DEPTH) OF ABLATIVE MATERIAL (BOTH SIDES OF WALL).

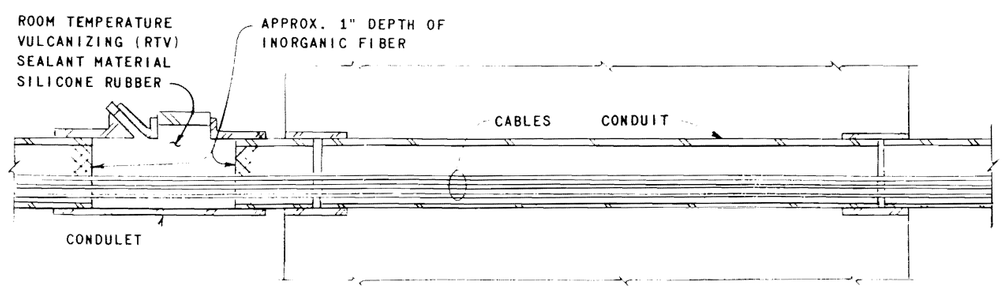

CONDUIT PENETRATION

Revised by Amendment 28

NOT TO SCALE

WATTS BAR NUCLEAR PLANT FINAL SAFETY ANALYSIS REPORT
TYPICAL ELECTRICAL PENETRATIONS FIGURE 6.2.3-3

Figure 6.2.3-3 Typical Electrical Penetrations

Security-Related Information - Withheld Under 10CFR2.390

Figure 6.2.3-4 Auxiliary Building Isolation Barrier

Security-Related Information - Withheld Under 10CFR2.390

Figure 6.2.3-5 Auxiliary Building Isolation Barrier

Figure 6.2.3-6 Auxiliary Building Isolation Barrier

Security-Related Information - Withheld Under 10CFR2.390

Figure 6.2.3-7 Auxiliary Building Isolation Barrier

Security-Related Information - Withheld Under 10CFR2.390

Figure 6.2.3-8 Auxiliary Building Isolation Barrier

Security-Related Information - Withheld Under 10CFR2.390

Figure 6.2.3-9 Auxiliary Building Isolation Barrier

Security-Related Information - Withheld Under 10CFR2.390

Figure 6.2.3-10 Auxiliary Building Isolation Barrier

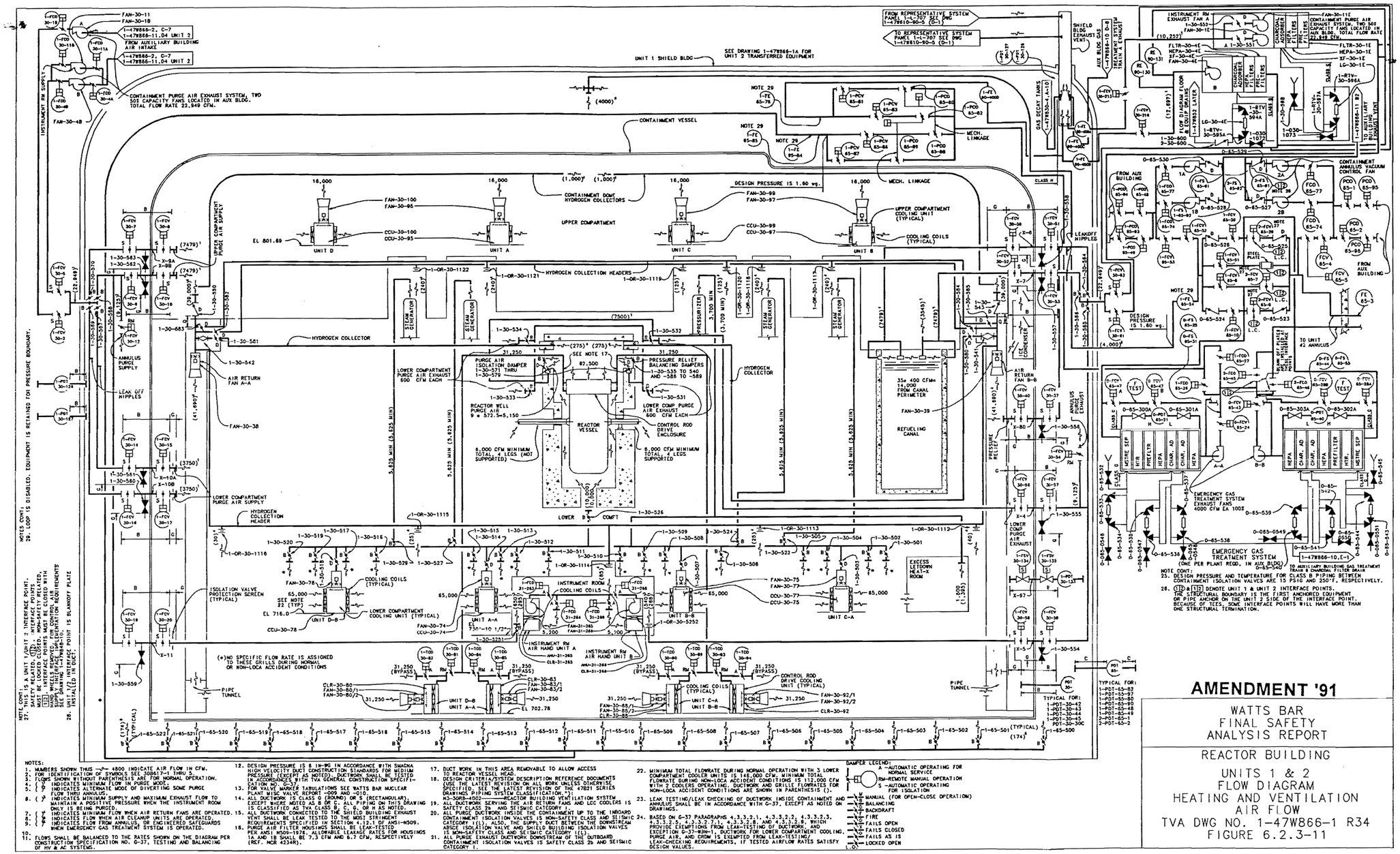

Figure 6.2.3-11 Reactor Building - Units 1 & 2 Flow Diagram - Heating and Ventilation Air Flow

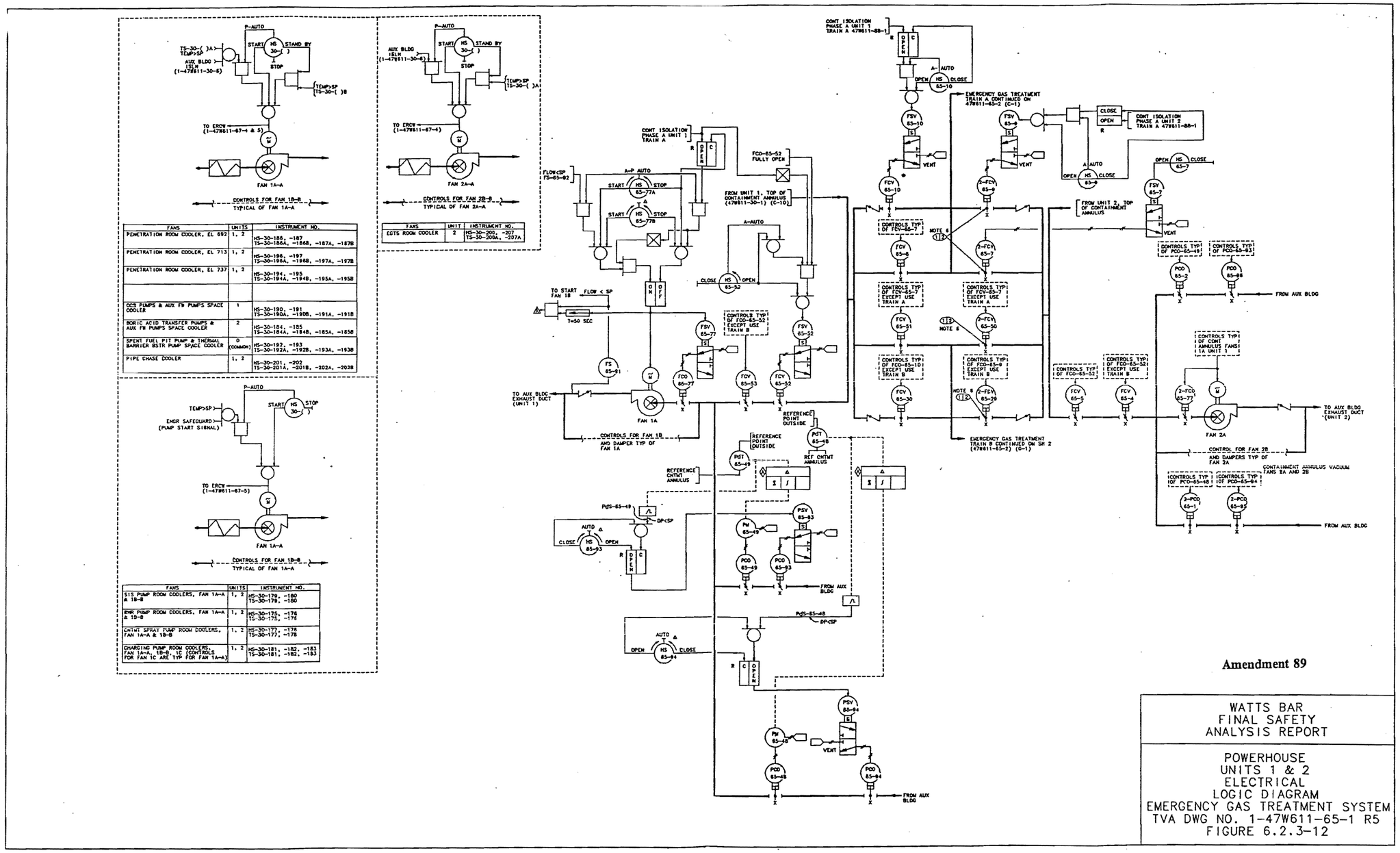

FANS	UNITS	INSTRUMENT NO.
PENETRATION ROOM COOLER, EL 692	1, 2	HS-30-188, -187 TS-30-188A, -188B, -187A, -187B
PENETRATION ROOM COOLER, EL 713	1, 2	HS-30-196, -197 TS-30-196A, -196B, -197A, -197B
PENETRATION ROOM COOLER, EL 737	1, 2	HS-30-194, -195 TS-30-194A, -194B, -195A, -195B
CCS PUMPS & AUX FW PUMPS SPACE COOLER	1	HS-30-190, -191 TS-30-190A, -190B, -191A, -191B
BORIC ACID TRANSFER PUMPS & AUX FW PUMPS SPACE COOLER	2	HS-30-184, -185 TS-30-184A, -184B, -185A, -185B
SPENT FUEL PIT PUMP & THERMAL BARRIER BSTR PUMP SPACE COOLER	0 (COMMON)	HS-30-192, -193 TS-30-192A, -192B, -193A, -193B
PIPE CHASE COOLER	1, 2	HS-30-201, -202 TS-30-201A, -201B, -202A, -202B

FANS	UNIT	INSTRUMENT NO.
EGTS ROOM COOLER	2	HS-30-206, -207 TS-30-206A, -207A

FANS	UNITS	INSTRUMENT NO.
SIS PUMP ROOM COOLERS, FAN 1A-A & 1B-B	1, 2	HS-30-179, -180 TS-30-179, -180
RHR PUMP ROOM COOLERS, FAN 1A-A & 1B-B	1, 2	HS-30-175, -176 TS-30-175, -176
CNTMT SPRAY PUMP ROOM COOLERS, FAN 1A-A & 1B-B	1, 2	HS-30-177, -178 TS-30-177, -178
CHARGING PUMP ROOM COOLERS, FAN 1AA, 1B-B, 1C (CONTROLS FOR FAN 1C ARE TYP FOR FAN 1A-A)	1, 2	HS-30-181, -182, -183 TS-30-181, -182, -183

Figure 6.2.3-12 Powerhouse Units 1 & 2 Electrical Logic Diagram - Emergency Gas Treatment System

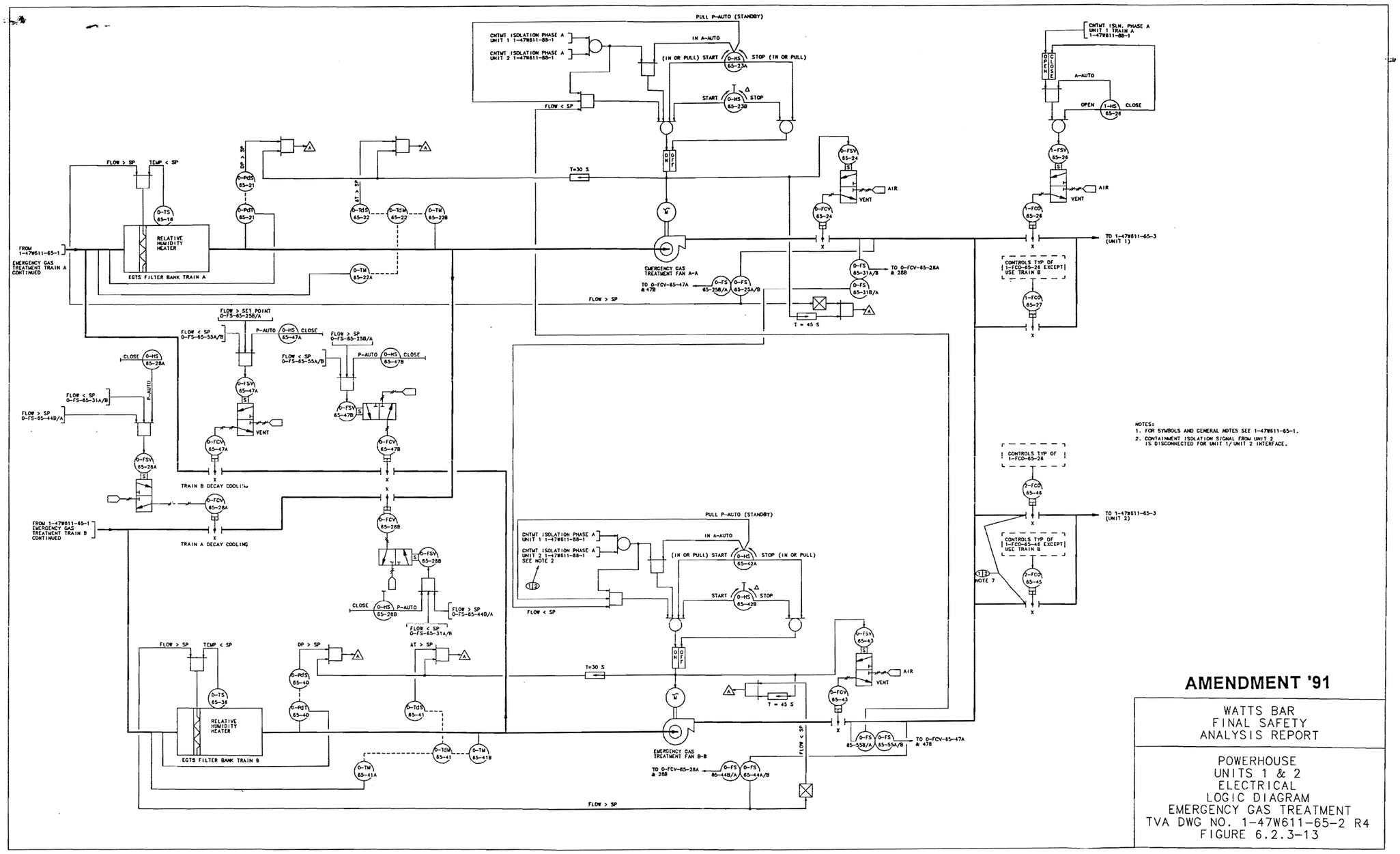

Figure 6.2.3-13 Powerhouse Units 1 & 2 Electrical Logic Diagram - Emergency Gas Treatment

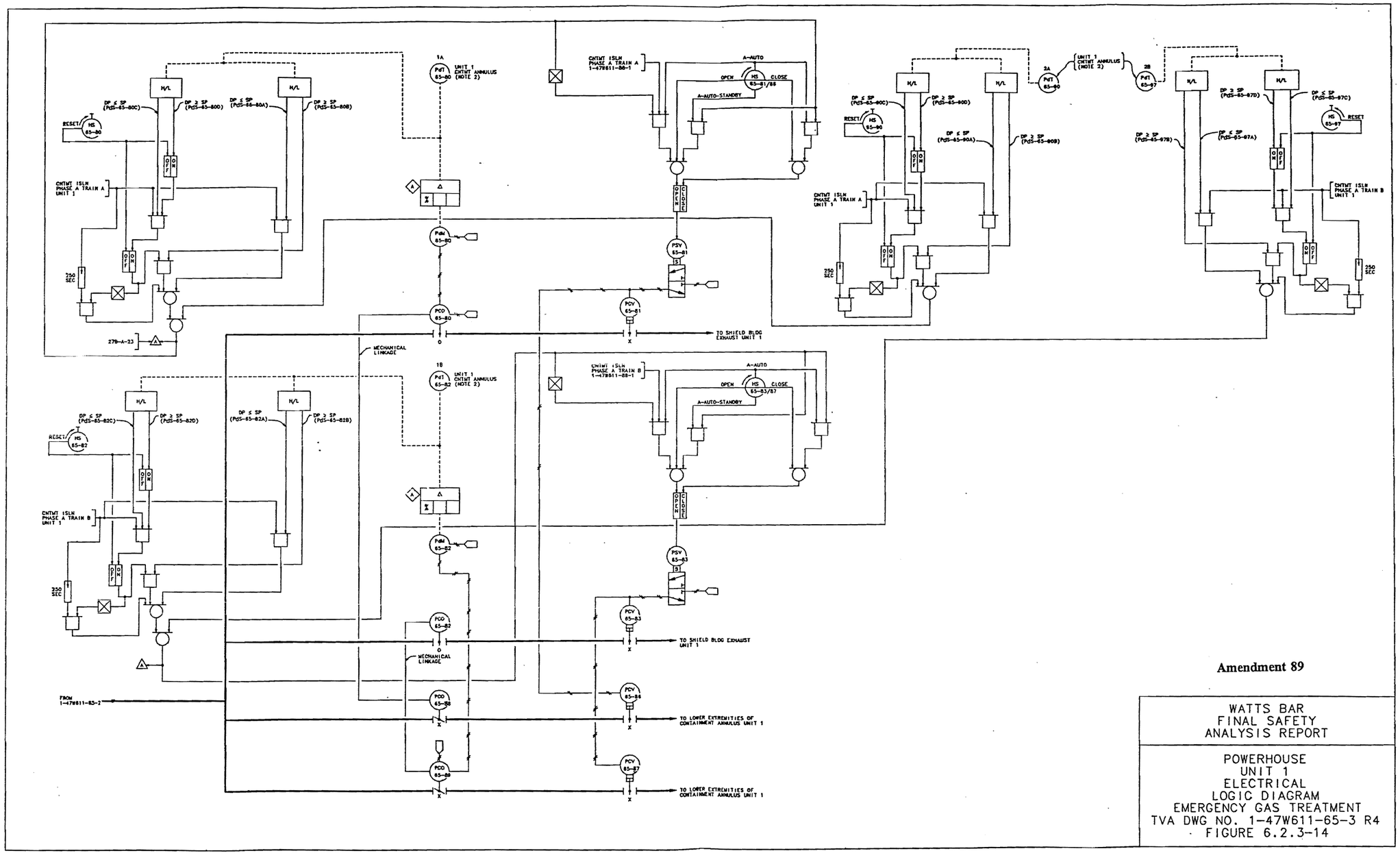

Figure 6.2.3-14 Powerhouse Unit 1 Electrical Logic Diagram -Emergency Gas Treatment

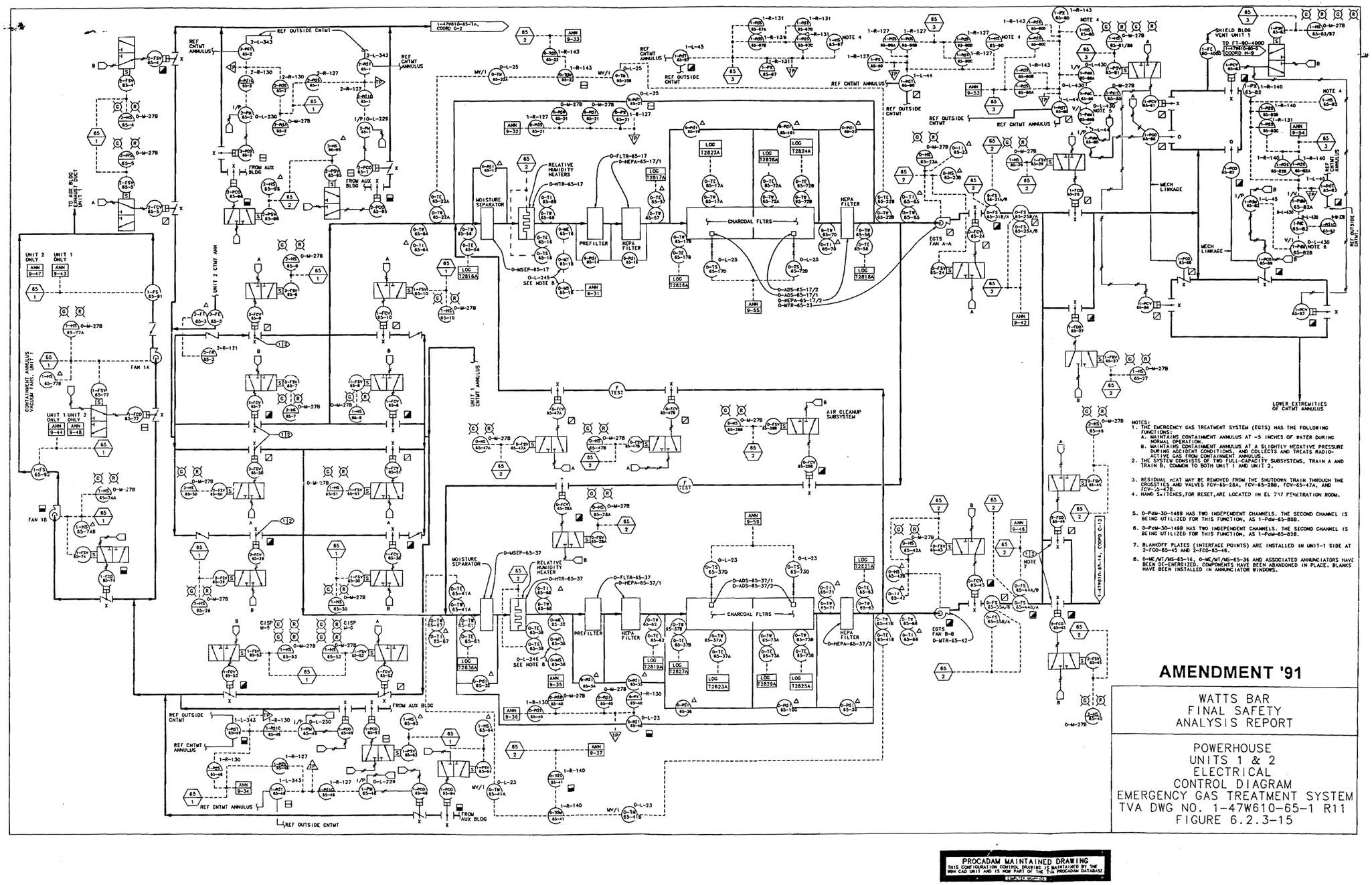

Figure 6.2.3-15 Powerhouse Units 1 & 2 Electrical Control Diagram - Emergency Gas Treatment System

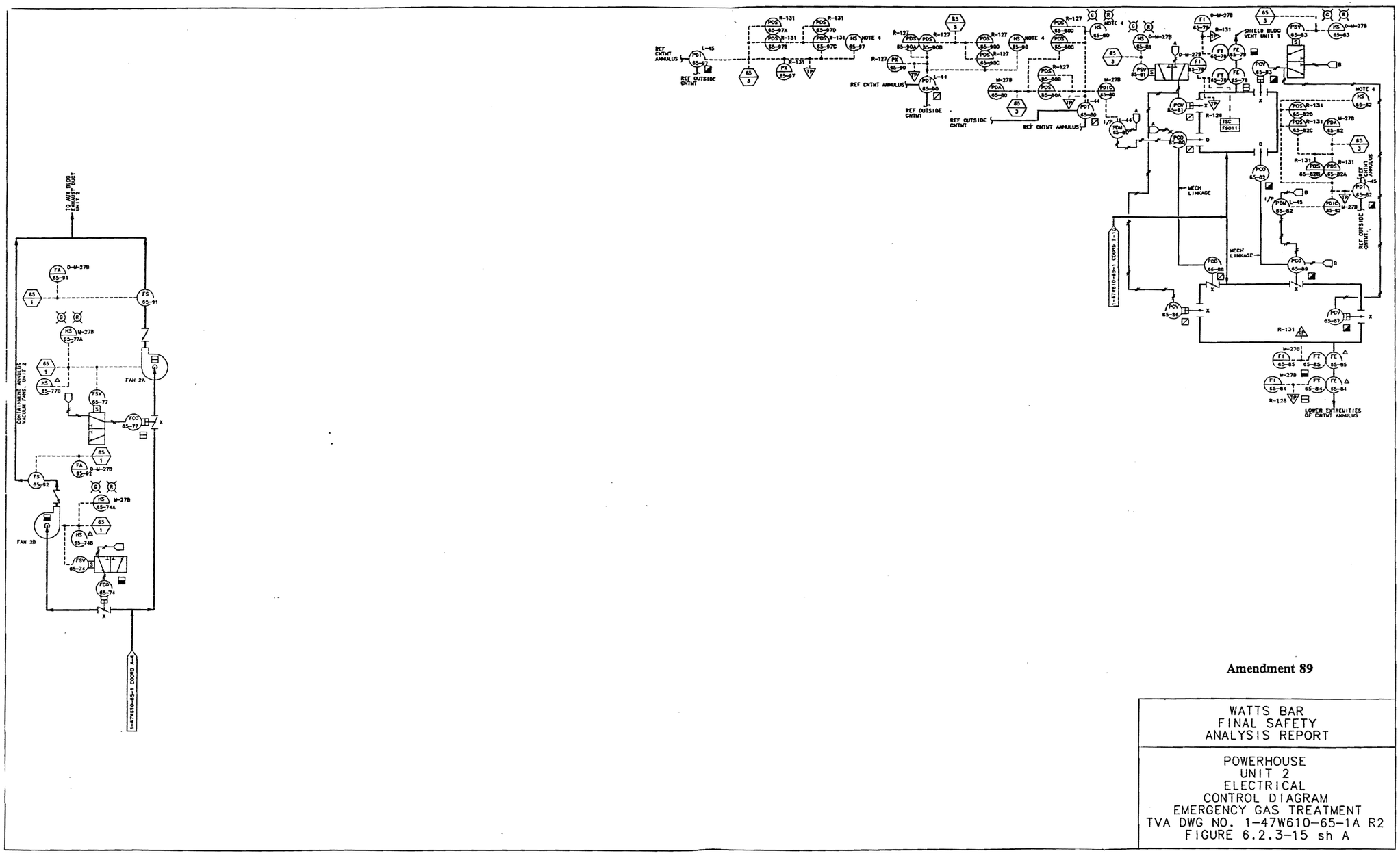

Figure 6.2.3-15-SH-A Powerhouse Unit 2 Electrical Control Diagram - Emergency Gas Treatment

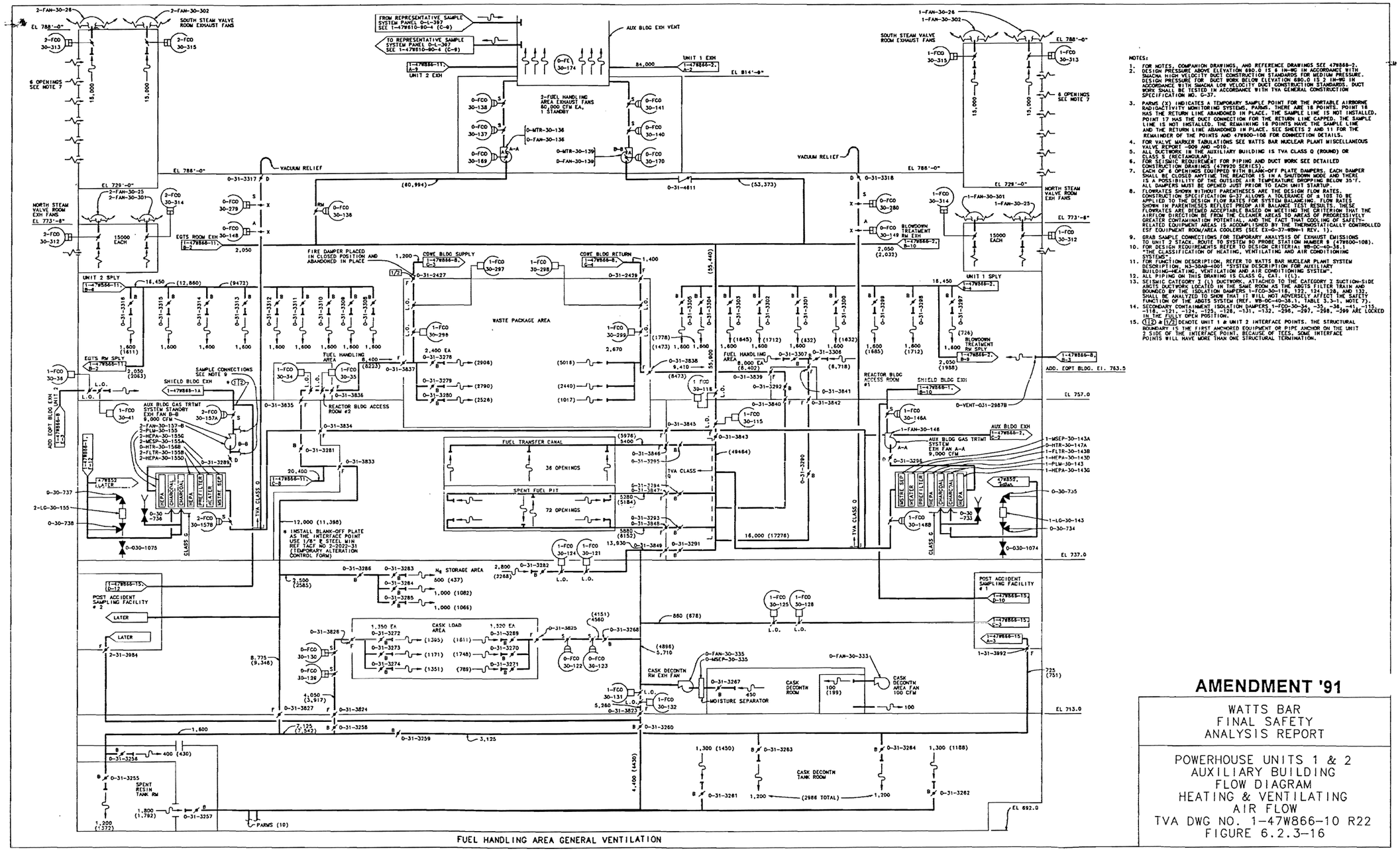

Figure 6.2.3-16 Powerhouse Units 1 & 2 Auxiliary Building -Flow Diagram -Heating & Ventilating Air Flow

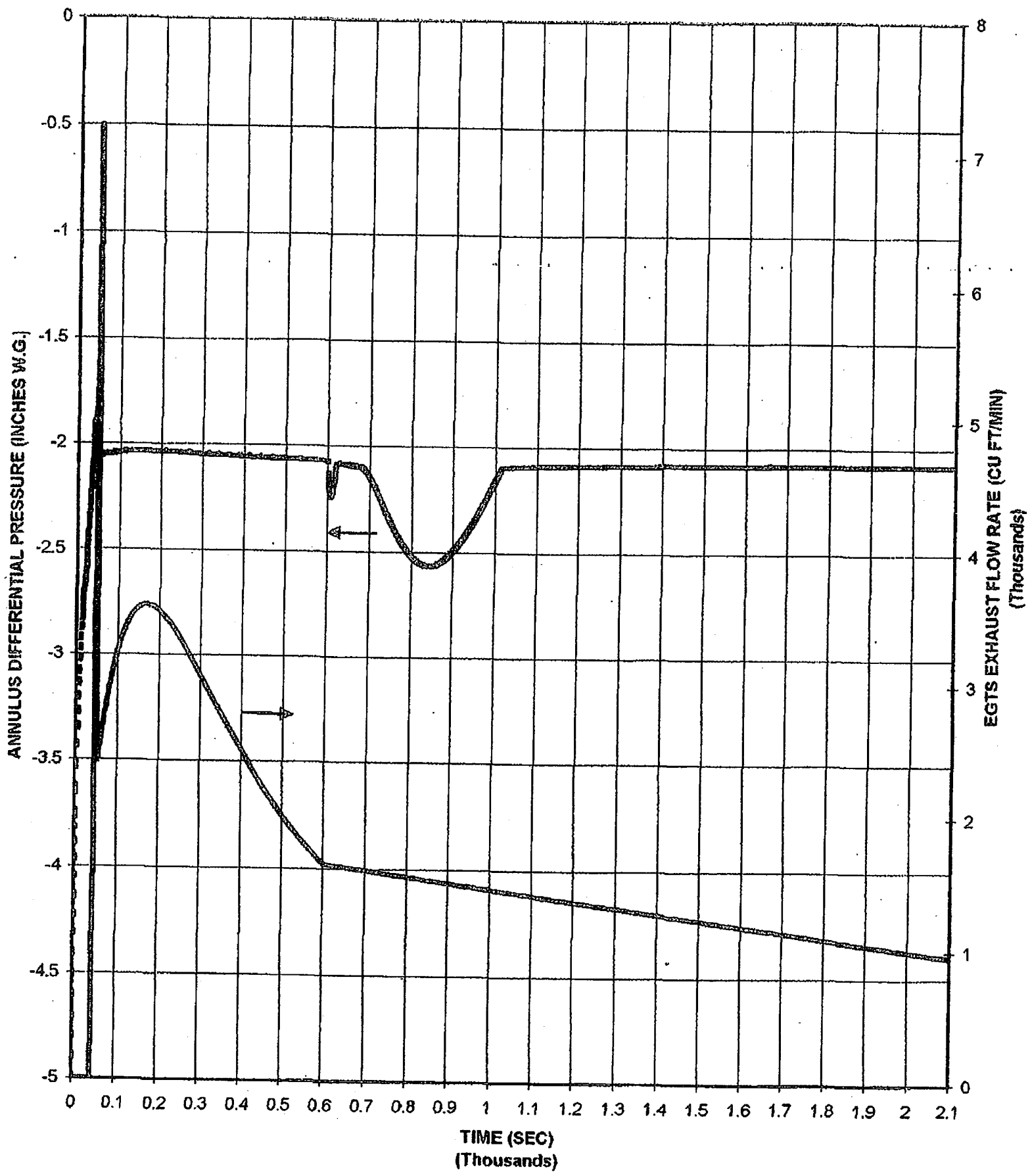

Figure 6.2.3-17 Post-Accident Annulus Pressure and Reactor Unit Vent Flow Rate Transients

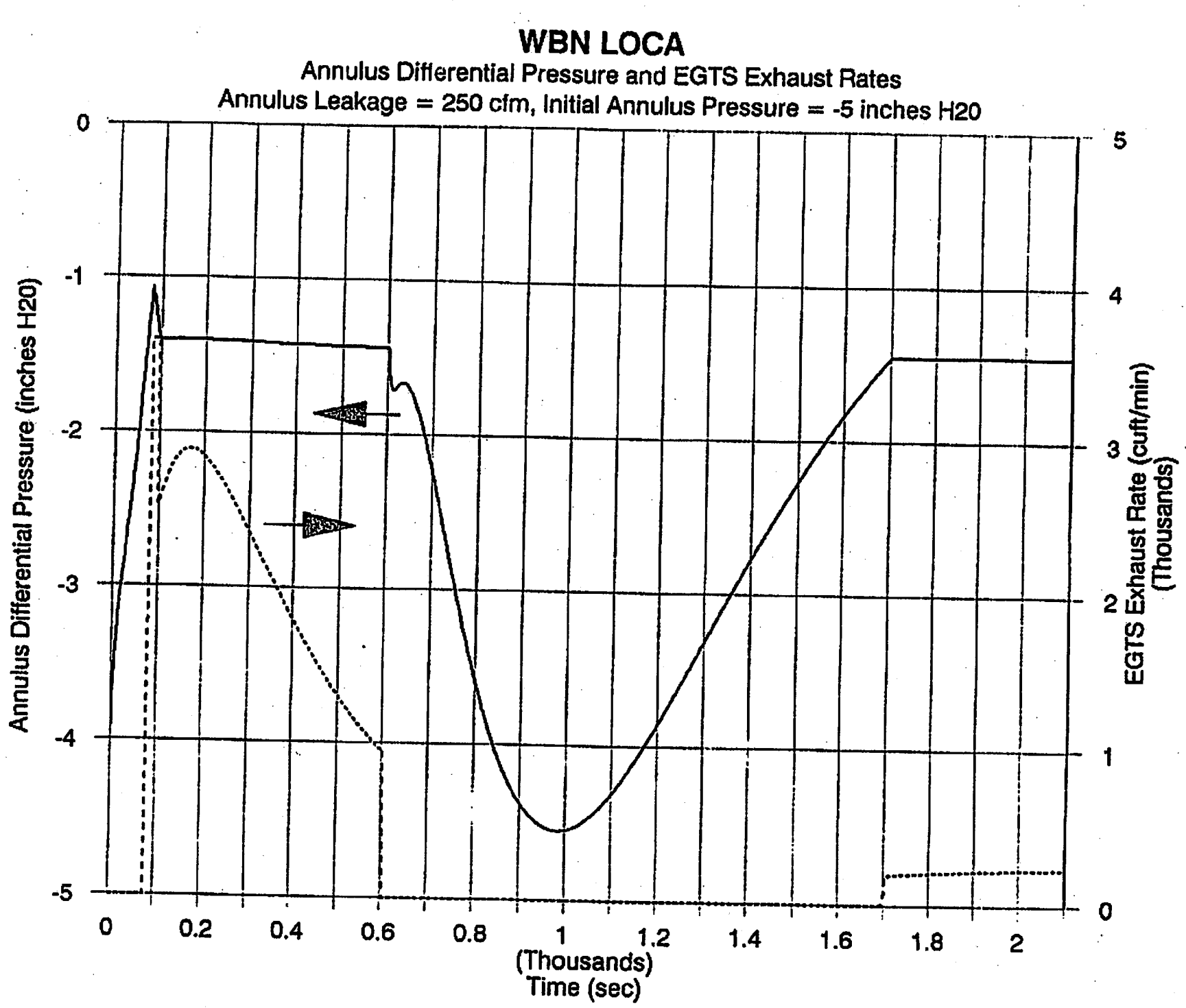

Figure 6.2.3-17A Post-Accident Annulus Pressure and Reactor Unit Vent Flow Rate Transients

Security-Related Information - Withheld Under 10CFR2.390

Figure 6.2.3-18 Reactor Building Units 1 & 2 Mechanical Heating and Ventilating

Security-Related Information - Withheld Under 10CFR2.390

Figure 6.2.3-19 Reactor Building Units 1 & 2 Mechanical Heating, Ventilation, And Air Conditioning

THIS PAGE INTENTIONALLY BLANK

6.2.4 Containment Isolation Systems

The containment isolation systems provide the means of isolating fluid systems that pass through containment penetrations so as to confine to the containment any radioactivity that may be released in the containment following a design basis event. The containment isolation systems are required to function following any design basis event that initiates a Phase A or Phase B containment isolation signal or releases radioactive materials into containment to isolate non-safety-related fluid systems penetrating the containment. The Watts Bar Nuclear Plant does not have a particular system for containment isolation, but isolation design is achieved by applying common criteria to penetrations in many different fluid systems and by using ESF signals to actuate appropriate valves.

6.2.4.1 Design Bases

The main function of the containment isolation system is to provide containment integrity when needed. Containment integrity is defined to exist when:

(1) The non-automatic containment isolation valves and blind flanges are closed as required.

(2) The containment equipment hatch is properly closed.

(3) At least one door in each containment personnel air lock is properly closed.

(4) All automatic containment isolation valves are operable or are deactivated in the closed position or at least one valve in each line having an inoperable valve is closed.

(5) All requirements of the Technical Specification with regard to containment leakage and test frequency are satisfied.

Containment integrity is required if there is fuel in the reactor which has been used for power operation, except when the reactor is in the cold shutdown condition with the reactor vessel head installed, or when the reactor is in the refueling shutdown condition with the reactor vessel head removed. Containment isolation is not essential for design basis events, such as HELBs, outside containment which do not release radioactive materials into containment. The failure of containment isolation valves for such an event would not result in the release of radioactive fluids from inside containment.

In general, the containment isolation system is designed to the requirements of General Design Criteria 54, 55, 56, and 57 of 10 CFR 50, Appendix A. The following are alternate containment isolation provisions for certain classes of lines:

(1) Fluid instrument lines penetrating the containment are designed to meet the referenced General Design Criteria except for the pressure sensor and reactor vessel level instrumentation system lines. Instrument lines which penetrate containment are listed in Table 6.2.4-4.

(2) Remote-manual valves are used for isolation provisions on certain lines associated with engineered safety features (such as the ECCS) instead of automatic isolation valves.

(3) A closed system outside the containment is acceptable as one of the two isolation barriers if designed to the following criteria:

(a) Does not communicate with the outside environment

(b) Meets Safety Class 2 design requirements

(c) Withstands the internal temperatures and pressures which occur as a result of the containment design basis events

(d) Withstands loss-of-coolant accident transients and environment

(e) Meets Seismic Category I design requirements

(f) Protected against missiles, pipe whip, and jet impingement.

(4) The isolation function of an engineered safety feature or system required to test an engineered safety feature requires one barrier to remain functional after the occurrence of a single active failure. Normally, this is accomplished by providing two isolation valves in series. If it can be shown that a single active failure can be accommodated with only one valve in the line and that fluid system reliability is enhanced by having one valve rather than two valves in series, then one valve and a closed system both located outside of the containment are acceptable. The single valve and piping between the containment and the valve are enclosed in a protective leaktight housing to prevent leakage to the atmosphere in the event of external leakage.

(5) Relief valves may be used as isolation valves, provided the relief valve setpoint is greater than 1.5 times the containment design internal pressure.

The criteria for the number and location of containment isolation valves in each fluid system depend on the valves functions and whether they are open or closed to the containment atmosphere or reactor coolant system. Four isolation classes of fluid system penetrations are defined as follows:

(1) Isolation Class I - Fluid lines which are open to the atmosphere outside the containment and are connected to the reactor coolant system or are open to the containment atmosphere. Each isolation Class I system has a minimum of two isolation valves in series. Where system design permits, one valve is located inside and one valve is located outside containment.

(2) Isolation Class II - Fluid lines which are connected to a closed system outside the containment and are connected to the reactor coolant system or are open to the containment atmosphere. Also included in isolation Class II are fluid lines which are open to the atmosphere outside the containment and are

separated from the reactor coolant system and the containment atmosphere by a closed system inside the containment. Each isolation Class II system has, as a minimum, one isolation valve.

(3) Isolation Class III - Fluid lines which are connected to a closed system both inside and outside the containment. Isolation Class III systems have, as a minimum, one isolation valve.

(4) Isolation Class IV - Fluid lines which must remain in service subsequent to a design basis event, such as lines serving ESF systems. Isolation valves on these lines are not automatically closed by the containment isolation signal. Each isolation Class IV system has, as a minimum, one isolation valve (remote-manual operation).

The following design requirements for containment isolation barriers apply:

(1) The design pressure of all piping and connected equipment comprising the isolation boundary is equal to or greater than the design pressure of the containment.

(2) All valves and equipment which are considered to be isolation barriers and designed in accordance with Seismic Category I criteria shall be protected against missiles and jet impingement, both inside and outside the containment.

(3) All valves and equipment which are considered to be isolation barriers are designed, as a minimum, to ASME Section III Class 2 requirements except as noted in Item 1 of Section 6.2.4.2.1.

(4) A system is closed inside the containment if it meets all of the following:

(a) It does not communicate with either the reactor coolant system or the reactor containment atmosphere.

(b) It will withstand external pressure and temperature equal to containment structural integrity test pressure and design temperature.

(c) It will withstand accident temperature, pressure, and fluid velocity transients, and the resulting environment, including internal thermal expansion.

(d) It is protected against missiles, pipe whip, and jet impingement.

(5) A check valve inside the containment on the incoming line is considered an automatic isolation valve.

(6) A pressure relief valve that relieves toward the inside of the containment is considered an automatic isolation valve.

(7) A locked closed valve is considered an automatic isolation valve.

(8) To qualify as an automatic isolation valve, an air-operated valve must fail closed on loss of air, power, etc.

(9) Valves used for containment isolation shall be designed capable of tight shutoff in order to limit gas leakage to a specific maximum amount at containment design pressure.

The design bases for the containment isolation system include provision for the following:

(1) A double barrier at the containment penetration in those fluid systems that are not required to function following a design basis event.

(2) Automatic, fast, efficient closure of those valves required to close for containment integrity following a design bases event to minimize release of any radioactive material.

(3) A means of leak testing barriers in fluid systems that serve as containment isolation.

(4) The capability to periodically test the operability of containment isolation valves.

6.2.4.2 System Design

The containment isolation system meets the design bases presented in Section 6.2.4.1 with the exception of those cases which are discussed in detail in Section 6.2.4.3.

Containment isolation can be initiated by either Phase A or Phase B signals.

A Phase A signal is generated by either of the following:

(1) Manual - either of two momentary controls

(2) A safety injection signal, generated by one or more of the following:

(a) Low steamline pressure in any steamline

(b) Low pressurizer pressure

(c) High containment pressure

(d) Manual - either of two momentary controls.

A Phase B signal is generated by either of the following:

(1) Manual - two sets (two switches per set) - actuation of both switches is necessary in either set for spray initiation

(2) Automatic High-high containment pressure.

Containment isolation Phase A always exists if containment isolation Phase B exists, when the Phase B signal is initiated by automatic instrumentation. Phase A containment isolation does not occur when the Phase B signal is initiated manually. The instrumentation circuits that generate both Phase A and Phase B signals are described in Chapter 7.

With the exception of the cases identified below, the containment isolation system provides for automatic, fast, and efficient closure of those valves required to close for containment integrity following a design basis event to minimize the release of any radioactive material. Closure times for isolation valves are included in Table 6.2.4-1.

With a single failure of containment isolation valves 1-FCV-32-110, 1-FCV-67-107, 1FCV-70-92 or 1-FCV-70-140, concurrent with an HELB inside containment such as a LOCA, Main Steam Line Break, or Feedwater Line Break, etc., manual actions are required to prevent the possibility of process fluid (air or water) from entering containment (See Tables 9.2-2, 9.2-9, and 9.3-7). Manual actions are required in these cases since a check valve serves as an inboard containment isolation valve, and pressure boundary integrity of the lines in containment past the check valves cannot be assured.

6.2.4.2.1 Design Requirements

Containment isolation barrier design includes the following requirements:

(1) As a minimum, containment barriers are designed to ASME Section III Class 2 requirements. This design meets the requirements of Regulatory Guide 1.26 for the containment isolation systems, except that the four auxiliary feedwater lines incorporate safety-grade Quality Group C (ASME Section III, Class 3) valves outside containment for isolation. This has been documented in NUREG 0847 as acceptable to the NRC. Valves and equipment which are considered to be isolation barriers are designed to Seismic Category I requirements which is the intent of Regulatory Guide 1.29.

(2) Isolation barriers either inside or outside of the containment are protected against missiles, pipe whip, and jet impingement during a LOCA.

(3) Power operated isolation valves are tested for operability by the manufacturer and preoperationally after installation. Those automatic isolation valves with air or motor operators that do not restrict normal plant operation are periodically tested to ensure operability.

Additional design information is included in Table 6.2.4-1.

6.2.4.2.2 Containment Isolation Operation

A containment isolation signal initiates closing of automatic isolation valves in those lines which must be isolated immediately following a design basis event. The containment isolation valves will close within the time specified in Table 6.2.4-1. However, on loss of ac power, the diesel will have to be started prior to closure. It is estimated that the time required to start the diesel is 10 seconds. The logic diagram for this system is shown in Figure 6.2.4-21.

Check valves are used under conditions where differential pressure will close the valves to maintain containment integrity. Lines which, for safety reasons, must remain in service subsequent to a design basis event are provided with at least one isolation valve.

Each automatic isolation valve required to operate subsequent to an accident is additionally provided with a manual control switch for operation. The position of these automatic isolation valves is indicated by status lights in the main control room. Primary and secondary modes of valve actuation are shown in Table 6.2.4-1.

Redundant isolation barriers are used to prevent any single failure from causing an open path from the containment. If two power operated valves are used in series in a line for isolation purposes, one valve is supplied with one train of control and power and the other valve is supplied by the other train. Redundancy in power, signals, and barriers is provided to assume isolation.

Provisions for detecting leakage from remote manually controlled systems (such an the ECCS) include the use of pressure and flow meters, and inspection of the systems during normal plant operation. Details for leak detection are given in the appropriate system descriptions. Piping systems penetrating the containment have been provided with test vents and test connections or have other provisions to allow periodic leak testing (see Section 6.2.6).

The manufacturers of isolation system components perform tests to demonstrate the ability of mechanical and electrical components located inside the containment to perform as required in the containment environment following the design basis accident. Accident conditions which are considered in the design of isolation components are pressure, humidity, radiation, and temperature. Section 3.11 gives information concerning the environmental conditions used in the design of the containment isolation system including more detail on qualification testing of ESF components.

The description and design requirements for the instrumentation and control portions of the containment isolation system are discussed in Chapter 7.

6.2.4.2.3 Penetration Design

The penetrations are classified into 24 different types. These are shown in Figures 6.2.4-1 through 6.2.4-17E.

The locations of these penetrations through the steel containment and the Shield Building are shown in Figures 6.2.4-18 and 6.2.4-19, respectively. The penetrations are tabulated in Table 6.2.4-1. The different types of penetrations are discussed below and the various possible leakage paths, as tabulated in Table 6.2.4-1 and shown in Figure 6.2.4-20, are also described below.

Penetration Types I and II - Main Steam and Feedwater

The main steam and feedwater line penetrations, shown in Figures 6.2.4-1 and 6.2.4-2, are the "hot" type in which the penetrations must accommodate thermal movement. Each "hot" process line where it passes through the containment penetration is enclosed in a guard pipe that is attached to the process line through a multiple fluid fitting. The guard pipe protects the bellows should the process line fail within the annulus between the containment vessel and the Shield Building, thereby precluding the discharge of fluids into the annulus. The inner end of the guard pipe is fitted with an impingement ring which protects the bellows from jets originating from pipe breaks inside containment. In addition, the guard pipe for this type of penetration extends through and is supported by the crane wall. This avoids transmitting loads to the containment vessel. Also, in the event of a pipe rupture it discharges fluid into the reactor compartment rather than smaller rooms outside the crane wall, thus preventing, overpressurization of these smaller rooms.

For each of these penetrations the penetration sleeve is welded to the containment vessel. The process line which passes through the penetration is allowed to move both axially and laterally. A two-ply bellows expansion joint is provided to accommodate any movement between the containment vessel and the Shield Building, under any conditions. The bellows is designed to withstand containment design pressure. When an embedded anchor is not utilized, a low-pressure flexible closure will seal the process line to the sleeve in the Shield Building, which will not impose significant stress on the penetration.

The flexible closure described above is located outdoors and serves to contain leakage from the flued head so that the leakage is routed back to the annulus, and to seal the annulus from the outdoors.

Guides and anchors limit movement of pipes such that design limits on the containment penetration and bellows are not exceeded during conditions of plant operation, test, or postulated accidents.

Penetration Type III - Residual Heat Removal Pump Supply and Return

The RHR pump supply and return penetrations, shown in Figure 6.2.4-3, are also the "hot" type. For these penetrations, the guard pipe does not penetrate the crane wall. This type of penetration is anchored at the Shield Building wall in addition to being supported from the internal concrete structure to minimize loads transmitted to the steel containment vessel.

The Shield Building sleeves have embedded anchors and the flued heads are in the Auxiliary Building. There is no need for low-pressure flexible closures as used in

penetrations types I and II, since any leakage from the flued head will be processed by the auxiliary building gas treatment system.

Penetration Types IV and V

Types IV and V penetrations are also thermally "hot" with insulation and bellows, as shown in Figure 6.2.4-4. Any leakage through the flued heads or through the bellow will be into the annulus and thereby processed by the emergency gas treatment system. The two types differ by only the weld ends.

Penetration Types VI, VII, and VIII

Penetrations types VI through X and XIII through XVIII are "cold" penetrations.

For "cold" piping penetrations, a low-pressure flexible closure will seal the cold pipe to the sleeve penetrating the Shield Building. The piping configuration and supports on either side of the penetration will be designed to preclude overstressing the containment vessel at the penetration under any conditions, including postulated accidents.

Relatively small thermal movement or stress is expected for the "cold" penetrations. The clearance space provided for the pipe going through the Shield Building wall is computed by the summation of the relative movements of the pipe and the Shield Building . Ample clearance space is provided so that the pipe will not be in contact with the Shield Building sleeve under any condition.

Penetration types VI and VII have provisions for dissimilar metal welding. The two types differ in their weld ends only. Penetration types VI and VII are illustrated in Figure 6.2.4-5. The flued heads of both types are located in the annulus.

Penetration type VIII is similar to that of penetrations types VI and VII, except that there is no dissimilar metal weld. Penetration type VIII is illustrated in Figure 6.2.4-6.

Penetration Type IX Containment Spray and RHR Spray Headers

There is no difference between penetration types VII and IX except that penetration type IX is located at the dome. Penetration type IX is illustrated in Figure 6.2.4-7. The flued heads are located in the annulus.

Penetration Type X - Multiple Line Sleeves

Type X penetrations are primarily for instrumentation lines such as sampling and monitor lines. Typical multiple line sleeves are shown in Figure 6.2.4-8.

Penetration Types XI and XII - Emergency Sump

During long-term post-accident conditions, containment sump water is recirculated through the RHR system and the containment spray system. The water collects on the floor of the containment and flows to the emergency sump. The water flows out of the containment through two type XII penetrations shown in Figure 6.2.4-9. Each line contains an isolation valve enclosed in a valve compartment. The valve compartments

are designed for the same conditions as the containment except for leaktightness. The penetration between each valve compartment and the Auxiliary Building is a type XI penetration illustrated in Figure 6.2.4-10.

The type XII penetration has a flued head located in the containment sump. The outer sleeve (guard pipe) of the flued head is welded directly to the containment liner which is completely embedded in the concrete.

The type XI penetration has the flued head located in the Auxiliary Building. The penetration is insulated because of the hot sump water which would pass through it in the event of a design bases event.

Penetration Type XIII - Ventilation

Heating and ventilation ducts utilize penetration type XIII, as shown in Figure 6.2.4-11. Process lines are welded directly to these penetrations. Additional information on ventilation duct penetrations is given in Section 6.2.4.3.1 on possible leakage paths.

Penetration Type XIV - Equipment Hatch

An equipment hatch fabricated from welded steel and furnished with a double-gasketed flange and bolted dished door is provided. A test connection to the space between the gaskets is provided to pressurize the space for leak rate testing, as shown in Figure 6.2.4-12.

Penetration Type XV - Personnel Access

Two personnel air locks are provided. Each personnel air lock, as shown in Figure 6.2.4-13, is a double door welded steel assembly. Quick-acting type equalizing valves are provided to equalize pressure in the air lock when personnel enter or leave the containment vessel. The doors are sealed with double gaskets. A test connection to the space between the gaskets is provided to pressurize the space for leak rate testing. The emergency air supply connection to the space between the double doors serves as a test connection to pressurize this space for leak rate testing. A special hold-down device is provided to secure the inner door in a sealed position during leak rate testing of the space between the doors.

The two doors in each personnel air lock are interlocked to prevent both being opened simultaneously and to ensure that one door and its equalizing valve are completely closed before the opposite door can be opened. Remote indicating lights and annunciators located in the main control room indicate the door is in operational status. Provision is made to permit bypassing the door interlocking system with a special tool to allow doors to be left, open during plant cold shutdown. Both doors may also be left open during fuel handling activities under special administrative controls as discussed in Section 6.2.3.2.1. Each lock door hinge is designed to be capable of adjustment to assure proper seating. A lighting and communication system is provided in the lock interior.

Penetration Type XVI - Fuel Transfer Tube

A 20-inch OD fuel transfer tube penetration is provided for fuel movement between the refueling canal in the containment and the spent fuel pool. The penetration consists of 20-in stainless steel pipe installed inside a 24-inch carbon steel pipe, as shown on Figure 6.2.4-14. The inner pipe acts as the transfer tube and is fitted with a double gasketed blind flange in the refueling canal and a standard gate valve in the spent fuel pool. The inner pipe is welded to the containment penetration sleeve. Bellows expansion joints are provided on the pipes to compensate for any differential movement between the two pipes or other structures.

Penetration Type XVII - Incore Instrumentation Thimble Assembly (IITA) Renewal

Incore instrumentation thimble assembly (IITA) renewal requires penetrations in both the steel containment and the Shield Building at the same elevation and azimuth. These are separate penetrations and are not connected in the annulus. The containment penetration is illustrated in Figure 6.2.4-15. A similar seal is used on the Shield Building. Double O-ring gaskets and leak rate test connectors are provided for both the containment penetration and the Shield Building penetration.

Penetration Type - XVIII - Ice Blowing

The ice blowing line penetration has a blind flange with double O-rings installed on the outside of the containment as shown in Figure 6.2.4-16. Sealing between the outside and the annulus penetration through the shield wall is provided by a blind flange fitted with a gasket installed on the inside and outside of the Shield Building penetration.

Penetration Type XIX - Electrical

The electrical penetration assemblies provide a means for the continuity of power, control, and signal circuits through the primary containment structure.

Each assembly consists of redundant pressure barriers through which the electrical conductors are passed, as shown in Figure 6.2.4-17.

Each penetration assembly is sized such that it may be inserted into and be compatible with the penetration nozzles which are furnished as a part of the containment structure. Unless otherwise specified, the assembly is designed to be inserted from the outboard-end of the primary containment nozzle.

The criteria and requirements for the design, construction, and installation of the modular type electrical penetrations conform to IEEE Standard 317-1976, "IEEE Standard for Electrical Penetration Assemblies in Containment Structures for Nuclear Fueled Power Generating Stations."

The criteria and requirements for the design construction and installation of fiber optic feed-throughs in modular type electrical penetrations conform to IEEE Standard 317-1983. “IEEE Standard for Electric Penetration Assemblies in Containment Structures for Nuclear Power Generating Station.”

Penetration Type XX

The feedwater bypass line penetrations, shown in Figure 6.2.4-17A are the 'hot' type in which the penetrations must accommodate thermal movement. Each 'hot' process line where it passes through the containment penetration is enclosed in a guard pipe that is attached to the process line through a multiple fluid fitting. The guard pipe protects the bellows should the process line fail within the annulus between the containment vessel, thereby precluding the discharge of fluids into the annulus. The inner end of the guard pipe is fitted with an impingement ring which protects the bellows from jets originating from pipe breaks inside containment. In addition, the guard-pipe for this type of penetration extends through and is supported by the crane wall. This avoids transmitting loads to the containment vessel. Also, in the event of a pipe rupture it discharges fluid into the reactor compartment rather than smaller rooms outside the crane wall, thus preventing overpressurization of these smaller rooms.

For each of these penetrations, the penetration sleeve is welded to the containment vessel. The process line which passes through the penetration is allowed to move both axially and laterally. A two-ply bellows expansion joint is provided to accommodate movement between the containment vessel and the Shield Building. The bellows is designed to withstand containment design pressure. When an embedded anchor is not utilized, a low-pressure flexible closure will seal the process line to the sleeve in the Shield Building, which will not impose significant stress on the penetration.

The flexible closure described above is located outdoors and serves to contain any leakage from the flued head so that the leakage is routed back to the annulus, and to seal the annulus from the outdoors.

Guides and anchors limit movement of pipes such that design limits on the containment penetration and bellows are not exceeded during plant operation, testing, or postulated accidents.

Penetration Type XXI

The ERCW lines and several component cooling water lines employ penetration type XXI, as shown in Figure 6.2.4-17B. Process lines are welded directly to these penetrations.

Penetration Type XXII

The type XXII penetration is used for the multiple line nitrogen penetration. This penetration is shown in Figure 6.2.4-17C.

Penetration Type XXIII

This type of penetration is used for the chilled water lines and each penetration contains a single chilled water line. The penetration is illustrated in Figure 6.2.4-17D.

Penetration Type XXIV

Type XXIV penetrations are used for maintenance ports. These penetrations employ bellows as shown in Figure 6.2.4-17E. Any leakage through the flued heads or through

the bellows will be into the annulus and thereby processed by the emergency gas treatment system.

The following codes, standards, and guides were applied in the design of the containment isolation system.

(1) 10 CFR Part 50

(2) ASME Boiler and Pressure Vessel Code Section III

(3) Regulatory Guide 1.26

(4) Regulatory Guide 1.29

(5) ANSI N18.2-1973

(6) IEEE Standard 317-1976

6.2.4.3 Design Evaluation

The containment isolation systems are designed to present a double barrier to any flow path from the inside to the outside of the containment using the double-barrier approach to meet the single-failure criterion.

When permitted by fluid system design, diverse modes of actuation are used for automatic isolation valves. In addition to diverse modes of operation, channel separation is also maintained. This also ensures that the single-failure criterion is met.

Adequate protection is provided for piping, valves, and vessels against dynamic effects and missiles which might result from plant equipment failures, including a LOCA.

Isolation valves inside the containment are located between the crane wall and the inside containment wall. The crane wall serves as the main missile barrier. Other missile barriers are discussed in Section 3.5.

The requirements and intent of NRC General Design Criteria 54, 55, 56, and 57 have been met with five exceptions.

(a) Primary containment monitoring instrument systems shall be designed to maintain the integrity of the containment isolation boundary in the event of a DBE. The instrument systems consist of pressure sensors (e.g., transmitters) located outside containment and associated sense lines that connect to the containment penetration nozzles. The sensors should be located as close as practical to the associated penetration nozzle. Any drain or test line used shall meet the double isolation barrier by use of two normally closed manual valves in series.

The instrument system shall be designed to Seismic Category I requirements and evaluated for effects of possible missiles, pipe whip, and jet impingement.

(b.1) The reactor vessel level indication system (RVLIS) is required post accident for continual indication of the water level in the reactor vessel. The capillary sensing lines which transmit pressure from the reactor vessel to instruments in the Auxiliary Building are armored and designed to withstand DBE conditions. Any containment isolation valves installed in the RVLIS capillary lines will jeopardize the performance of the system. For this reason, isolation of these capillary lines is accomplished by a sealed sensor located inside containment and an isolator located outside containment. These devices utilize a type of bellows which transmits pressure while preventing mixing of the fluids on either side of the isolation devices. The capillary line is armored stainless steel tubing and is filled with demineralized water and sealed. A postulated shear of this capillary line on either side of the containment would not allow a leak to develop through the containment boundary.

(b.2) The RCS wide range pressure transmitter (PT-68-70) is required post accident for continual indication of the pressure in the reactor vessel. The capillary sensing lines which transmit pressure from the reactor vessel to instruments in the Auxiliary Building are armored and designed to withstand DBE conditions. Any containment isolation valves installed in the RCS wide range pressure transmitter capillary lines will jeopardize the performance of the system. For this reason, isolation of these capillary lines is accomplished by a sealed sensor located inside containment and an isolator located outside containment. These devices utilize a type of bellows which transmits pressure while preventing mixing of the fluids on either side of the steel tubing and is filled and sealed. A postulated shear of this capillary line on either side of the containment would not allow a leak to develop through the containment boundary.

(c) Containment isolation for each RHR sump line penetration consists of:

(1) A closed system outside containment.

(2) A containment isolation valve outside containment in each of the two lines after the penetrating line branches in the RHR sump valve room. Both of these valves are remotely controlled from the main control room.

An enclosure of the RHR sump lines and isolation valves is provided from the containment out to and including the isolation valves. However, this enclosure is not designed to be leaktight after an accident for the following reasons:

(1) The maximum pressure which will be experienced inside the RHR sump line will only be about 25 psig.

(2) One of the isolation valves, the containment sump valve, is qualified to 600 psig. The other isolation valve, the containment spray valve, is qualified to 200 psig.

(3) This portion of the system only operates post accident and, therefore, only a limited leak passive failure need be postulated (and this would be at the valve). However, based on the above two statements and the fact that deadweight loading (i.e., normal operation) should not exceed the MELB criteria, the over-design should preclude any problem.

Thus, the penetration has such overconservatism in its design that an external leaktight enclosure around the valves is not necessary.

(d) The pressure boundary valve leak rate test line containment isolation valves (63-158, 63-112, 63-111, 63-167, 63-174, 63-21, and 63-121) are remote manually actuated from the main control room and do not receive a containment isolation signal. These valves are open for short periods of time during normal operation for the performance of SIS and RHR system venting. Thus, these valves do not automatically close when the containment isolation or safety injection signal is initiated during the venting of the SIS and RHR system. This exception is acceptable because administrative controls exist in the test document to assure valve closure after testing and containment integrity is not compromised during pump operation (i.e., during testing at accident conditions) since flow is being maintained into containment.

(e) The design configuration for penetrations X-79A (ice blowing), and X–79B (negative return) is temporarily modified in operating Modes 5 and 6 and when the reactor is defueled (Mode 7) to support ice blowing activities. The normally closed blind flange on each penetration will be opened and temporary piping will be installed in the penetrations. A 12–inch silicone seal will be installed between the piping segment and the penetration. Manual isolation valves will be connected to the piping on the inboard and outboard side of the penetrations. This configuration is being installed to permit ice blowing operations to occur concurrently with fuel handling activities inside containment. Administrative controls will ensure timely closure of the valves subsequent to a fuel handling accident. The penetrations will be returned to their normal design configuration prior to entry into Mode 4 operations.

6.2.4.3.1 Possible Leakage Paths

Possible leakage paths from the containment are defined below. The leakage paths are defined on the basis that the annulus pressure is less than outdoor ambient, the Auxiliary Building, and the containment pressures. Therefore, whenever containment

is required, leakage is into the annulus. The possible leakage paths considered do not include containment leakage through the steel plates or through the full penetration welds in the containment vessels. The possible leakage paths also do not include Shield Building embedments. This is acceptable, as leakage through any of these paths will be into the annulus and the leakage will be processed by the EGTS.

The more probable sources of containment and Shield Building leakage, such as elastomer seals, bellows, and through lines are considered as possible leak path types. Each penetration that contains elastomer seals or a bellows has at least one leakage path defined in Table 6.2.4-1. Penetrations not open to the annulus are considered as possible paths for through-line containment leakage and have one or more isolation valves. Thus every pipe penetration has at least one type of leak path listed in Table 6.2.4-1. The five different types of possible leakage paths are shown in Figure 6.2.4-20, tabulated in Table 6.2.4-1 and are discussed separately below.

Type A - Leakage Path

Type A leakage is leakage from the Auxiliary Building into the annulus. Type A penetration leakage includes the following:

(1) Equipment hatch Shield Building sleeve leak (see Figure 6.2.4-12).

(2) Annulus access door leak.

(3) Containment purge supply and exhaust isolation valves outside Shield Building leak. The possible leakage is through the valves and the leakoff (see Figure 6.2.3-2) into the annulus.

(4) Shield Building penetration seal leakage.

Type B - Leakage Path

Type B leakage paths are from the containment to the annulus. Type B leakage includes the following:

(1) Equipment hatch double O-ring through-line leak (see Figure 6.2.4-12).

(2) Ice blowing line O-ring and blind flange through line leak (see Figures 6.2.4-16 and 6.2.4-23).

(3) Penetration bellows leak.

(4) Containment purge supply and exhaust inboard and outboard valves through line leak. The leakage will pass through the leak off (see Figure 6.2.3-2) into the annulus.

(5) Containment Incore Instrumentation Thimble Assembly renewal line double O-ring through-line leak (see Figure 6.2.4-15).

Type C - Leakage Path

Type C leakage is leakage from the out-of-doors into the annulus and includes the following:

(1) Shield Building Incore Instrumentation Thimble Assembly renewal line double O-ring through-line leak.

(2) Main steam and feedwater lines annulus seal leak.

(3) Ice blowing line Shield Building blind flange leak (See Figure 6.2.4-16).

Type D - Leakage Path

Type D leakage path covers the through-line leakage from the containment to the Auxiliary Building (see Table 6.2.4-2). Included in this type of leakage are the lines associated with the safety systems required for post-LOCA operation, such as containment spray, RHR spray, high-head SIS, low-head SIS, SIS pump discharge, charging pump discharge, and containment emergency sump. For "closed" systems inside the Auxiliary Building, the through-line leakage will stay within the closed system. The component cooling water system is basically a closed system, except for the vent header at the surge tank. Any through-line leakage into the Auxiliary Building through this vent will be processed by the auxiliary building gas treatment system. Radiation monitoring is provided as a signal to initiate the closing of the vent. The nitrogen supply lines to the pressurizer relief tank and to the accumulators are normally closed. The high pressure outside of the isolation valves serves to minimize through-line leakage outward. The personnel lock is yet another possible source for through-line leakage, but the leakage through the double O-ring (assuming one door open) is small, if any, and will be processed by the auxiliary building gas treatment system.

Type E - Leakage Path

Type E leakage paths are paths from the containment that bypass the annulus and leak directly past a cleanup system. These leakage paths were considered during the design of the Watts Bar Nuclear Plant. The design features utilized at Watts Bar eliminates type E leakage paths. This is done by the following methods:

(1) Portions of the Auxiliary Building are maintained at a negative pressure relative to the outside atmosphere for the duration of an accident. Section 6.2.3 describes the implementing system and its operation.

(2) Leakoff lines to the secondary containment and a third outboard valve receiving an isolation signal are used in certain lines (such as the containment purge lines) to prevent bypass leakage.

(3) A water seal(s) at greater than peak accident pressure or which has been shown by analysis to provide the necessary containment integrity is used to prevent bypass leakage in certain lines (such as the safety injection pump

discharge or ERCW upper and lower compartment supply and return lines). The seals are available for at least 30 days after a design basis event (see Table 6.2.6-3.

(4) The secondary side of the steam generator is kept at a higher pressure than the primary side soon after the LOCA occurs (see Section 10.4.3). Leakage between the primary and secondary sides of the steam generator is thus directed inward to the containment.

Table 6.2.4-3 lists potential bypass leakage paths to the atmosphere and the methods chosen to eliminate such leakage.

6.2.4.4 Tests and Inspections

Components of the containment isolation systems were designed, fabricated, and tested under quality assurance requirements in accordance with 10 CFR 50, Appendix B, as further described in Chapter 17. An alternative to visual examination during ASME Section III hydrostatic pressure testing was approved by Reference [1] for penetrations having inaccessible vendor welds.

Nondestructive examination was performed on the components of the system in accordance with the applicable codes described in Section 3.2.

Subsequent to initial plant operation, containment isolation systems are periodically tested under conditions of normal operation to determine that all systems are in constant readiness to perform the desired function.

Automatic isolation valves that receive a containment isolation signal to close, where closure of the valve will not limit or restrict normal plant operation, are periodically functionally tested by the on-line testing capability described in Section 7.3.1.1.3. Other valves are periodically tested for CIS circuit electrical continuity. Other testing information is provided in Section 6.2.6.

REFERENCES

(1) NRC Inspection Report Nos. 50-390/90-04 and 50-391/90-04, dated May 17, 1990.

Table 6.2.4-1 Watts Bar Nuclear Plant Containment Penetrations And Barriers

DUE TO THE SIZE OF TABLE 6.2.4-1

IT IS LOCATED IN THE OVERSIZED TABLE FILE

Table 6.2.4-1 Watts Bar Nuclear Plant Containment Penetrations And Barriers (Sheet 65 of 69)

ABBREVIATIONS FOR TABLE

VALVE TYPE

GL = GLOBE

GA = GATE

BF = BUTTERFLY

CK = CHECK

A = ANGLE

RV = RELIEF

DI = DIAPHRAGM

BL = BLIND FLANGE

TC = TEST CONNECTION

TO = TEST DRAIN

TV = TEST VENT

WV = WAFER VALVE

D = DOOR

BA = BALL

PG = PLUG

ACTUATORS

AO = AIR OPERATED

MO = MOTOR OPERATED

SO = SOLENOID OPERATED

ILRT

C = CLOSED

O = OPEN

ISOLATION SIGNAL

CV = CONTAINMENT VENT ISOLATION

PA = PHASE A

PB = PHASE B

PR = PUMP RUN

CP = CONTAINMENT PRESSURE

SI = SAFETY INFECTION

AFIS = AUXILIARY FEEDWATER ISOLATION SIGNAL

MS = MAIN STEAM ISOLATION SIGNAL

FW = FEEDWATER ISOLATION SIGNAL

Table 6.2.4-1 Watts Bar Nuclear Plant Containment Penetrations And Barriers (Sheet 66 of 69)

ABBREVIATIONS FOR TABLE

ACTUATION MODE

RM = REMOTE MANUAL

LM = LOCAL MANUAL

SA = SELF ACTUATOR

AT = AUTO TRIP

AO = AUTO OPEN

VALVE POSITIONS

O = OPEN

C = CLOSED

V = VARIES

AI = AS IS

LC = LOCKED CLOSED

PROCESS FLUID STATE

C = COLD

H = HOT

POSSIBLE LEAKAGE PATHS

SEE FSAR SECTION 6.2.4.3.1

FLUID

A = AIR

W = WATER

S = STEAM

N = NITROGEN

I = ICE

G = GLYCOL

BUILDING STRUCTURES

CB = CONTAINMENT BUILDING

SB = SHIELD BUILDING

AB = AUXILIARY BUILDING

Table 6.2.4-1 Watts Bar Nuclear Plant Containment Penetrations And Barriers
(Sheet 67 of 69)

1. A DASH IS PRINTED IN DATA SPACES THAT DO NOT APPLY TO THE PENETRATION BEING DESCRIBED.

2. AN M AT THE END OF A CONTAINMENT OR SHIELD BUILDING PENETRATION NUMBER INDICATES THE PENETRATION HAS MORE THAN ONE LINE GOING THROUGH IT.

3. PIPING SYSTEMS ISOLATED BY A CONTAINMENT VENTILATION (CV) SIGNAL ARE ALSO ISOLATED BY A PHASE A SIGNAL.

4. PIPING INSIDE THE CONTAINMENT VESSEL HAS FIVE BRANCHES. IDENTICAL ISOLATION VALVES ARE INSTALLED IN EACH BRANCH. ONE VALVE IS NORMALLY OPEN. THREE OTHER VALVES ARE NORMALLY CLOSED AND ALSO RECEIVE PHASE A SIGNAL. THE FIFTH VALVE IS A RELIEF VALVE WHICH RELIEVES INTO CONTAINMENT.

5. THE PIPING IS JOINED BY A LINE LEADING TO THE NITROGEN SUPPLY OUTSIDE OF THE SHIELD BUILDING. THIS LINE IS ISOLATED BY AN AIR OPERATED GATE VALVE WITH PHASE A ISOLATION.

6. DUCTING OUTSIDE THE SHIELD BUILDING HAS TWO BRANCHES. IDENTICAL SECONDARY CONTAINMENT ISOLATION VALVES ARE INSTALLED IN EACH BRANCH.

7. PIPING OUTSIDE OF THE SHIELD BUILDING HAS NINE BRANCHES. EACH LINE IS ISOLATED BY A RELIEF VALVE.

8. INSIDE THE CONTAINMENT VESSEL A LINE IS PROVIDED FOR PRESSURE RELIEF OF THE VOLUME BETWEEN THE ISOLATION VALVES. THIS LINE IS ISOLATED BY A CHECK VALVE.

9. THE PIPING IS JOINED BY A LINE USED FOR S.I.S. TESTING OUTSIDE OF THE SHIELD BUILDING. THIS LINE IS ISOLATED BY AN AIR OPERATED GLOBE VALVE WITH REMOTE MANUAL ACTUATION FROM THE MAIN CONTROL ROOM.

10. THE PIPING HAS A BYPASS LINE ATTACHED TO IT INSIDE THE ANNULUS. THIS BYPASS LINE IS ISOLATED BY A LOCKED CLOSED GATE VALVE WITH LOCAL MANUAL OPERATION.

11. ISOLATION INSIDE CONTAINMENT IS ACCOMPLISHED BY A CLOSED SYSTEM.

12. THE DP SENSORS ARE CLOSED SYSTEMS OUTSIDE OF CONTAINMENT THAT ARE ATTACHED DIRECTLY TO THE CONTAINMENT. NO IN LINE ISOLATION VALVES ARE EMPLOYED FOR THESE SENSORS REFER TO SECTION 6.2.4.3.

Table 6.2.4-1 Watts Bar Nuclear Plant Containment Penetrations And Barriers
(Sheet 68 of 69)

13. POST ACCIDENT MONITORING SYSTEM (PAMS) WIDE RANGE PRESSURE SENSORS ALSO MONITOR PRESSURE THROUGH THIS PENETRATION.

14. THE SECONDARY CONTAINMENT ISOLATION VALVE(S), WHICH REPRESENT AN ADDITIONAL BOUNDARY OUTSIDE CONTAINMENT IN HVAC SYSTEMS, ARE USED TO PREVENT BYPASS LEAKAGE FROM THE ANNULUS.

15. ISOLATION VALVES CAN BE MANUALLY ACTUATED ELECTRICALLY OR PNEUMATICALLY.

16. TWO BLIND FLANGES ARE EMPLOYED IN THE ANNULUS, ONE ACTS AS A PRIMARY CONTAINMENT ISOLATION BARRIER AND OTHER AS A SECONDARY CONTAINMENT ISOLATiON BARRIER. THE PRIMARY AND SECONDARY CONTAINMENT PENETRATIONS ARE NOT CONNECTED EXCEPT FOR THE TYPE A TEST PRESSURIZATION.

17. OUTSIDE CONTAINMENT, RELIEF VALVES RELEASE INTO THIS LINE IN THE EVENT OF SIS OVERPRESSURE, THUS THE SYSTEM IS ALMOST ALWAYS CLOSED, BUT COULD OPEN FOR PRESSURE RELIEF ANYTIME SIS IS ON.

18. OUTSIDE CONTAINMENT, A ONE INCH LINE TIES IN BETWEEN THE OUTER ISOLATION VALVE AND PRIMARY CONTAINMENT. THIS LINE IS ISOLATED BY A MANUALLY LOCKED CLOSED CONTAINMENT ISOLATION VALVE.

19. THE CONTAINMENT ISOLATION VALVES IN THIS LINE REQUIRE SIMULTANEOUS OPEN SIGNALS FROM TWO SEPARATE SWITCHES IN ORDER TO OPEN. ONE SWITCH IS LOCATED IN THE MAIN CONTROL ROOM AND THE OTHER IS LOCATED IN THE REMOTE SAMPLING STATION.

20. DELETED FOR UNIT 2.

21. THIS LINE TRANSMITS PRESSURE FROM THE PRIMARY COOLANT SYSTEM TO PRESSURE INSTRUMENTATION FOR DETERMINING THE REACTOR VESSEL FLUID LEVEL. THE LINE IS FLUID FILLED AND DOUBLE DIAPHRAGMED TO PREVENT COMMUNICATION BETWEEN THE PRIMARY SYSTEM FLUID AND THE AUXILIARY BUILDING. NO PRIMARY SYSTEM FLUID TRAVELS THROUGH THE PENETRATION SINCE THE INNER DIAPHRAGM IS LOCATED NEAR THE REACTOR VESSEL. SINCE DOUBLE DIAPHRAGMS ARE EMPLOYED FOR CONTAINMENT ISOLATION, NO CONTAINMENT ISOLATION VALVES ARE USED.

22. THIS LINE JOINS THE SECONDARY SIDE OF THE STEAM GENERATOR(S) INSIDE CONTAINMENT AND IS THEREFORE CONSIDERED A CLOSED SYSTEM INSIDE CONTAINMENT. THE ISOLATION VALVES WHICH EXIST OUTBOARD OF CONTAINMENT ARE NOT LEAKRATE TESTED DUE TO FLOODING OF THE STEAM GENERATORS POST LOCA.

Table 6.2.4-1 Watts Bar Nuclear Plant Containment Penetrations And Barriers (Sheet 69 of 69)

23. BETWEEN PRIMARY CONTAINMENT AND THE OUTER ISOLATION VALVE IN THIS LINE, AN AUXILIARY FEEDWATER LINE ADJOINS. THE AUXILIARY FEEDWATER LINE HAS ISOLATION VALVES WHICH ARE ISOLATED IN THE SAME MANNER AS THE AUXILIARY FEEDWATER ISOLATION VALVES LISTED FOR X-40A AND X-40B.

24. NOT USED

25. AZIMUTH INFORMATION FOR THESE LINES CAN BE FOUND IN CHICAGO BRIDGE & IRON CO. STEEL CONTAINMENT VESSEL DATA PACKAGE (RIMS #B48850425301).

26. NO TYPE C LEAKAGE RATE TEST IS PERFORMED ON THIS LINE, BUT A WATER INVENTORY LEAKAGE RATE TEST IS PERFORMED ON THE MOV LOCATED OUTSIDE CONTAINMENT. THIS WATER LEAKAGE TEST ASSURES THAT THE WATER LEG, LOCATED IMMEDIATELY INBOARD OF THE MOV, WILL MAINTAIN A SUFFICIENT INVENTORY TO MAINTAIN A PRESSURE OF AT LEAST 1.1 TIMES THE MAXIMUM CALCULATED CONTAINMENT ACCIDENT PRESSURE ON THE MOV FOR 30 DAYS AFTER AN ACCIDENT.

27. PENETRATION X-118 IS OPENED BY REMOVING THE BLIND FLANGE IN THE ANNULUS TO ALLOW THE WATER WHICH HAS COLLECTED IN THE ANNULUS FROM LEAKAGE THROUGH THE PENETRATIONS OR SEE PAGE THROUGH THE CONCRETE TO DRAIN THE REACTOR BUILDING FLOOR AND EQUIPMENT DRAIN SUMP.

28. THIS LINE TRANSMITS PRESSURE FROM THE PRIMARY COOLANT SYSTEM TO PRESSURE INSTRUMENTATION. THE LINE IS FLUID FILLED AND DOUBLE DIAPHRAGMED TO PREVENT COMMUNICATION BETWEEN THE PRIMARY SYSTEM FLUID AND THE AUXILIARY BUILDING. NO PRIMARY SYSTEM FLUID TRAVELS THROUGH THE PENETRATION SINCE THE INNER DIAPHRAGM IS LOCATED NEAR THE REACTOR VESSEL. SINCE DOUBLE DIAPHRAGMS ARE EMPLOYED FOR CONTAINMENT ISOLATION, NO CONTAINMENT ISOLATION VALVES ARE USED.

29. SYS.26 HPFP LINE SUPPLIES THE CABLE TRAY INTERACTION (RB ANNULUS) THROUGH SHIELD BUILDING PEN. MK 103 LOCATED AT THE SAME EL AND AZ AS CONTAINMENT PEN.X-88 (REF.DWG. 47W850-9).

30. SYS.26 HPFP LINE SUPPLIES THE STAND PIPE (RB ANNULUS) THROUGH SHIELD BUILDING PEN. MK 104 LOCATED AT THE SAME EL AND AZ AS CONTAINMENT PEN.X-89 (REF.DWG. 47W850-9).

Table 6.2.4-2 Possible Bypass Leakage Paths To The Auxiliary Building (Page 1 of 6)

Penetration Number	Penetrating Line Name	Description
X-2 A, B	Personnel Access Hatch	Any leakage would be treated by the ABGTS.
X-3	Fuel Transfer Tube	Any leakage would be treated by the ABGTS.
X-15	Chemical and Volume Letdown Line	Any leakage would be treated by the ABGTS.
X-16*	Normal Charging Line	High water pressure maintained on outboard valve, even in the event of a single failure.
X-17	RHR Hot Leg Injection	System is in operation after an accident. Cross ties between pumps maintain flows in the event of a single failure.
X-19 A&B*	RHR Sump Suction Line	Line is always filled with water. No atmospheric bypass leakage to the Auxiliary Building can occur after a LOCA.
X-20 A&B*	SIS RHR Pump Discharge	System is in operation after a LOCA. Cross ties between pumps maintain flows and pressure in the event of a single failure.
X-21*	Safety Injection Pump Discharge	Line in use during a LOCA which will be pressurized even in the event of a single failure due to cross ties between pumps.
X-22*	Charging Pump Discharge	Same as for Penetration No. 21.
X-24*	SIS Relief Valve Discharge	Any leakage through the relief valve is prevented as the valves are pressurized outside containment by the SIS system. Any leakage would be into containment.
X-25A	Pressurizer Liquid Sample	Any leakage would be treated by the ABGTS.
X-25D	Pressurizer Steam Sample	Any leakage would be treated by the ABGTS.
X-27 A, B, C, D	Steam Generator Sample Lines	Any leakage would be treated by the ABGTS.

Table 6.2.4-2 Possible Bypass Leakage Paths To The Auxiliary Building (Page 2 of 6)

Penetration Number	Penetrating Line Name	Description
X-29	CCS from RC Pump Coolers	Any leakage would be treated by the ABGTS.
X-30	Accumulator to Holdup Tanks	Any leakage would be treated by the ABGTS.
X-31	Fire Protection	Any leakage would be treated by the ABGTS.
X-32*	Safety Injection Discharge	Same as for Penetration No. 21.
X-33*	Safety Injection Discharge	Same as for Penetration No. 21.
X-34	Control Air I&C	Any leakage would be treated by the ABGTS.
X-35	CCS from Excess Letdown Heat Exchanger	Same as for Penetration No. 29.
X-39A	N_2 to Accumulators	Any leakage would be treated by the ABGTS.
X-39B	N_2 to Pressurizer Relief Tank	Any leakage would be treated by the ABGTS.
X-40D	Service Air	Any leakage would be treated by the ABGTS.
X-41	Floor Sump Pump Discharge	Any leakage would be treated by the ABGTS.
X-42	Pressurizer Relief Tank Makeup	Any leakage would be treated by the ABGTS.
X-43 A*,B*,C*,D*	To RC Pump Seals	The line is pressurized during a LOCA even in the event of a single failure. If there was any leakage it would be treated by the ABGTS.
X-44	From RC Pump Seals	Any leakage would be treated by the ABGTS.
X-45	RC Drain Tank and PRT to Vent Header	Any leakage would be treated by the ABGTS.
X-46	RC Drain Tank Pump Discharge	Any leakage would be treated by the ABGTS.
X-47A	Glycol Line to Ice Condenser	Any leakage would be treated by the ABGTS.
X-47B	Glycol Line from Ice Condenser	Any leakage would be treated by the ABGTS.

Table 6.2.4-2 Possible Bypass Leakage Paths To The Auxiliary Building (Page 3 of 6)

Penetration Number	Penetrating Line Name	Description
X-48 A&B*	Containment Spray	System in operation after a LOCA. A 30-day water leg seal is maintained in this line.
X-49 A&B	RHR Spray	System in operation after a LOCA. System pressure maintained even in the event of a single failure due to pump cross ties.
X-50A	RCP Thermal Barrier Return	Same as for Penetration No. 29.
X-50B	RCP Thermal Barrier Supply	Any leakage would be treated by the ABGTS.
X-52*	CCS to RC Pump Coolers	Same as for Penetration No. 43.
X-53*	CCS to Excess Letdown Heat Exchanger	Same as for Penetration No. 43.
X-56A*	Lower Containment ERCW Supply	High water pressure maintained on outboard valve, even in the event of a single failure.
X-57A*	Lower Containment ERCW Return	High water pressure maintained on outboard valve, even in the event of a single failure.
X-58A*	Lower Containment ERCW Supply	High water pressure maintained on outboard valve, even in the event of a single failure.
X-58B	RCS Pressure Sensor	Any leakage would be treated by the ABGTS.
X-59A*	Lower Containment ERCW Return	High water pressure maintained on outboard valve, even in the event of a single failure.
X-60A*	Lower Containment ERCW Supply	High water pressure maintained on outboard valve, even in the event of a single failure.
X-61A*	Lower Containment ERCW Return	High water pressure maintained on outboard valve, even in the event of a single failure.
X-62A*	Lower Containment ERCW Supply	High water pressure maintained on outboard valve, even in the event of a single failure.
X-63A*	Lower Containment ERCW Return	High water pressure maintained on outboard valve, even in the event of a single failure.

Table 6.2.4-2 Possible Bypass Leakage Paths To The Auxiliary Building (Page 4 of 6)

Penetration Number	Penetrating Line Name	Description
X-64	Inst. Rm, AC Chilled Water Return	Any leakage would be treated by the ABGTS.
X-65	Inst. Rm. AC Chilled Water Supply	Any leakage would be treated by the ABGTS.
X-66	Inst. Rm. AC Chilled Water Return	Any leakage would be treated by the ABGTS.
X-67	Inst. Rm. AC Chilled Water Supply	Any leakage would be treated by the ABGTS.
X-68*	Upper Containment ERCW Supply	High water pressure maintained on outboard valve, even in the event of a single failure.
X-69*	Upper Containment ERCW Supply	High water pressure maintained on outboard valve, even in the event of a single failure.
X-70*	Upper Containment ERCW Return	High water pressure maintained on outboard valve, even in the event of a single failure.
X-71*	Upper Containment ERCW Return	High water pressure maintained on outboard valve, even in the event of a single failure.
X-72*	Upper Containment ERCW Return	High water pressure maintained on outboard valve, even in the event of a single failure.
X-73*	Upper Containment ERCW Return	High water pressure maintained on outboard valve, even in the event of a single failure.
X-74*	Upper Containment ERCW Return	High water pressure maintained on outboard valve, even in the event of a single failure.
X-75*	Upper Containment ERCW Supply	High water pressure maintained on outboard valve, even in the event of a single failure.
X-76	Service Air	Any leakage would be treated by the ABGTS.
X-77	Demineralized Water	Any leakage would be treated by the ABGTS.
X-78	Fire Protection	Any leakage would be treated by the ABGTS.

Table 6.2.4-2 Possible Bypass Leakage Paths To The Auxiliary Building (Page 5 of 6)

Penetration Number	Penetrating Line Name	Description
X-81	RC Drain Tank to Gas Analyzer	Any leakage would be treated by the ABGTS.
X-82	Refueling Cavity C-U Pump Suction	Any leakage would be treated by the ABGTS.
X-83	Refueling Cavity C-U Pump Discharge	Any leakage would be treated by the ABGTS.
X-84A	Pressurizer Relief Tank to Gas Analyzer	Any leakage would be treated by the ABGTS.
X-84B	Reactor Vessel Level Indicating System	Any leakage would be treated by the ABGTS.
X-84C	Reactor Vessel Level Indicating System	Any leakage would be treated by the ABGTS.
X-84D	Reactor Vessel Level Indicating System	Any leakage would be treated by the ABGTS.
X-85B	Hot Leg Sample	Any leakage would be treated by the ABGTS.
X-87B	Reactor Vessel Level Indicating System	Any leakage would be treated by the ABGTS.
X-87C	Reactor Vessel Level Indicating System	Any leakage would be treated by the ABGTS.
X-87D	Reactor Vessel Level Indicating System	Any leakage would be treated by the ABGTS.
X-90	Control Air	Any leakage would be treated by the ABGTS.
X-91	Control Air	Any leakage would be treated by the ABGTS.

Table 6.2.4-2 Possible Bypass Leakage Paths To The Auxiliary Building (Page 6 of 6)

Penetration Number	Penetrating Line Name	Description
X-93	Accumulator Sample	Any leakage would be treated by the ABGTS.
X-94 B, X-95 B	Containment Atmosphere Radiation Monitor	Any leakage would be treated by the ABGTS.
X-94 C, X-95 C	Containment Atmosphere Radiation Monitor	Any leakage would be treated by the ABGTS.
X-99	H_2 Analyzer	Any leakage would be treated by the ABGTS.
X-100	H_2 Analyzer	Any leakage would be treated by the ABGTS.
X-107	RHR Supply	Any leakage would be treated by the ABGTS.
X-114	Ice Condenser (to Glycol Cool FL Pumps)	Any leakage would be treated by the ABGTS.
X-115	Ice Condenser (to Glycol Cool FL Pumps)	Any leakage would be treated by the ABGTS.

* Not a bypass leakage path to the Auxiliary Building.

Table 6.2.4-3 Prevention Of Bypass Leakage To The Atmosphere (Page 1 of 2)

Penetration Number	Penetration Line Name	Description
X-4	Lower Compartment Purge Air Exhaust	Leakoff lines to the annulus
X-5	Instrument Room Purge Air Exhaust	Leakoff lines to the annulus
X-6	Upper Compartment Purge Air Exhaust	Leakoff lines to the annulus
X-7	Upper Compartment Purge Air Exhaust	Leakoff lines to the annulus
X-8A	Feedwater Bypass	Secondary side of the steam generator is pressurized above containment pressure
X-8B	Feedwater Bypass	Same as for Penetration X-8A
X-8C	Feedwater Bypass	Same as for Penetration X-8A
X-8D	Feedwater Bypass	Same as for Penetration X-8A
X-9A	Upper Compartment Purge Air Supply	Leakoff lines to the annulus
X-9B	Upper Compartment Purge Air Supply	Leakoff lines to the annulus
X-10A	Lower Compartment Purge Air Supply	Leakoff lines to the annulus
X-10B	Lower Compartment Purge Air Supply	Leakoff lines to the annulus
X-11	Instrument Room Purge Air Supply	Leakoff lines to the annulus
X-12A	Feedwater	Same as for Penetration X-8A
X-12B	Feedwater	Same as for Penetration X-8A
X-12C	Feedwater	Same as for Penetration X-8A
X-12D	Feedwater	Same as for Penetration X-8A
X-13A	Main Steam	Same as for Penetration X-8A
X-13B	Main Steam	Same as for Penetration X-8A

Table 6.2.4-3 Prevention Of Bypass Leakage To The Atmosphere (Page 2 of 2)

Penetration Number	Penetration Line Name	Description
X-13C	Main Steam Line	Same as for Penetration X-8A
X-13D	Main Steam Line	Same as for Penetration X-8A
X-14A, B, C, D	Steam Generator Blowdown	Same as for Penetration X-8A
X-40A	Auxiliary Feedwater	Same as for Penetration X-8A
X-40B	Auxiliary Feedwater	Same as for Penetration X-8A
X-56A	Lower Compartment ERCW Supply	Leakage prevented by combination of water seal and piping traps in conjunction with acceptance limits for Appendix J Testing as defined in design output.
X-57A	Lower Compartment ERCW Return	Same as for Penetration X-56A
X-58A	Lower Compartment ERCW Supply	Same as for Penetration X-56A
X-59A	Lower Compartment ERCW Return	Same as for Penetration X-56A
X-60A	Lower Compartment ERCW Supply	Same as for Penetration X-56A
X-61A	Lower Compartment ERCW Return	Same as for Penetration X-56A
X-62A	Lower Compartment ERCW Supply	Same as for Penetration X-56A
X-63A	Lower Compartment ERCW Return	Same as for Penetration X-56A
X-68	Upper Compartment ERCW Supply	Same as for Penetration X-56A
X-69	Upper Compartment ERCW Supply	Same as for Penetration X-56A
X-70	Upper Compartment ERCW Return	Same as for Penetration X-56A
X-71	Upper Compartment ERCW Return	Same as for Penetration X-56A
X-72	Upper Compartment ERCW Return	Same as for Penetration X-56A
X-73	Upper Compartment ERCW Return	Same as for Penetration X-56A
X-74	Upper Compartment ERCW Supply	Same as for Penetration X-56A
X-75	Upper Compartment ERCW Supply	Same as for Penetration X-56A
X-80	Lower Compartment Pressure Relief	Leakoff lines to the annulus
X-108	Maintenance Port	Blind Flange, double O-ring design with a zero leakage criteria; not open during power operation
X-109	Maintenance Port	Blind flange, double O-ring design with a zero leakage criteria; not open during power operation

Table 6.2.4-4 Instrument Lines Penetrating Primary Containment (Page 1 of 3)

Line Identification	No.	Penetration Number	Line Size Inches	Orifice	Inner Isolation Valve Number	Valve Type	Valve Location	Outer Isolation Valve Number	Valve Type	Valve Location
Pressurizer Liquid Sample	1	X-25A	3/8	No	43-11	Globe	Inside Prim Containment	43-12	Globe	Annulus
Pressurizer Steam Sample	2	X-25D	3/8	No	43-2	Globe	Inside Prim Containment	43-3	Globe	Annulus
dP Sensor[1]	3	X-26C	1/2	No	-	-	-	-	-	-
Steam Generator No. 1 Sample and Water Quality	4	X-27A	3/8	No	43-54D	Globe	Inside Prim Containment	43-55	Globe	Annulus
Steam Generator No. 2 Sample	5	X-27B	3/8	No	43-56D	Globe	Inside Prim Containment	43-58	Globe	Annulus
Steam Generator No. 3 Sample	6	X-27C	3/8	No	43-59D	Globe	Inside Prim Containment	43-61	Globe	Annulus
Steam Generator No. 4 Sample	7	X-27D	3/8	No	43-63D	Globe	Inside Prim Containment	43-64	Globe	Annulus
dP Sensor[1]		X-57B	1/2	No	-	-	-	-	-	-
dP Sensor[1]		X-60B	1/2	No	-	-	-	-	-	-
dP Sensor[1]		X-102	1/2	No	-	-	-	-	-	-

Table 6.2.4-4 Instrument Lines Penetrating Primary Containment (Page 2 of 3)

Line Identification	No.	Penetration Number	Line Size Inches	Orifice	Inner Isolation Valve Number	Valve Type	Valve Location	Outer Isolation Valve Number	Valve Type	Valve Location
Accum. to Holdup Tanks	8	X-30	3/4	No	63-071	Globe	Inside Prim Containment	63-084	Globe	Outside Shield Building
Pressurizer Relief Tank to Gas Analyzer	9	X-84A	3/8	No	68-308	Globe	Inside Prim Containment	68-307	Globe	Annulus
Reactor Vessel Level Ind Sys	10	X-84B	3/16	No	-	-	-	-	-	-
Reactor Vessel Level Ind Sys	11	X-84C	3/16	No	-	-	-	-	-	-
Reactor Vessel Level Ind Sys	12	X-84D	3/16	No	-	-	-	-	-	-
Hot Leg Sample - Loops 1 and 3	13	X-85B	3/8	No	43-22	Globe	Inside Prim Containment	43-23	Globe	
Reactor Vessel Level Ind Sys	16	X-87B	3/16	No	-	-	-	-	-	

Table 6.2.4-4 Instrument Lines Penetrating Primary Containment (Page 3 of 3)

Line Identification	No.	Penetration Number	Line Size Inches	Orifice	Inner Isolation Valve Number	Valve Type	Valve Location	Outer Isolation Valve Number	Valve Type	Valve Location
Reactor Vessel Level Ind Sys	17	X-87C	3/16	No	-	-	-	-	-	-
Reactor Vessel Level Ind Sys	18	X-87D	3/16	No	-	-	-	-	-	-
Accumulator Sample	19	X-93	3/8	No	43-34	Globe	Inside Prim Containment	43-35	Globe	Annulus
Lower Compartment Air Monitor Intake	20	X-94B	1-1/2	No	90-110	Globe	Inside Prim Containment	90-111	Globe	Annulus
Lower Compartment Air Monitor Return	21	X-94C	1-1/2	No	90-108 90-109	Globe	Inside Prim Containment	90-107	Globe	Annulus
Upper Compartment Air Monitor Intake	22	X-95B	1-1/2	No	90-116	Globe	Inside Prim Containment	90-117	Globe	Annulus
Upper Compartment Air Monitor Return	23	X-95C	1-1/2	No	90-114 90-115	Globe	Inside Prim Containment	90-113	Globe	Annulus
Containment dP Sensor[1] (PdT-30-133)	24	X-97	1/2	No	-	-	-	-	-	-
Containment dP Sensor[1] (PdT-30-30C)	25	X-98	1/2	No	-	-	-	-	-	-
Hydrogen Analyzer	26	X-99	3/8	No	43-202	Globe	Inside Prim. Containment	43-434	Globe	Annulus
Hydrogen Analyzer	27	X-100	3/8	No	43-201	Globe	Inside Prim. Containment	43-433	Globe	Annulus

[1] These have no in-line containment isolation valves - see Section 6.2.4.3 and Table 6.2.4-1.

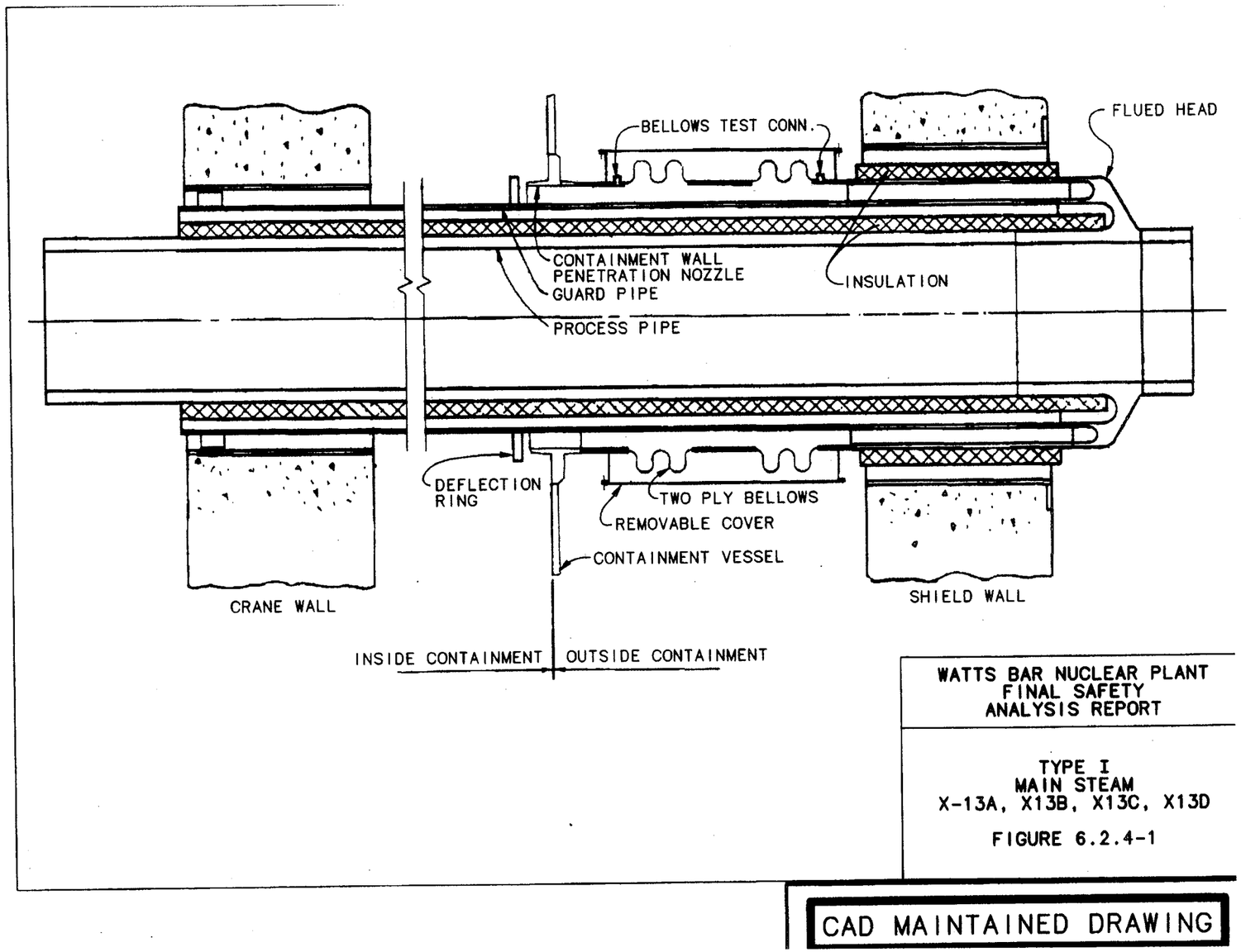

Figure 6.2.4-1 Type 1, Main Steam X-I3A, X-I3B, X-I3C, X-13D

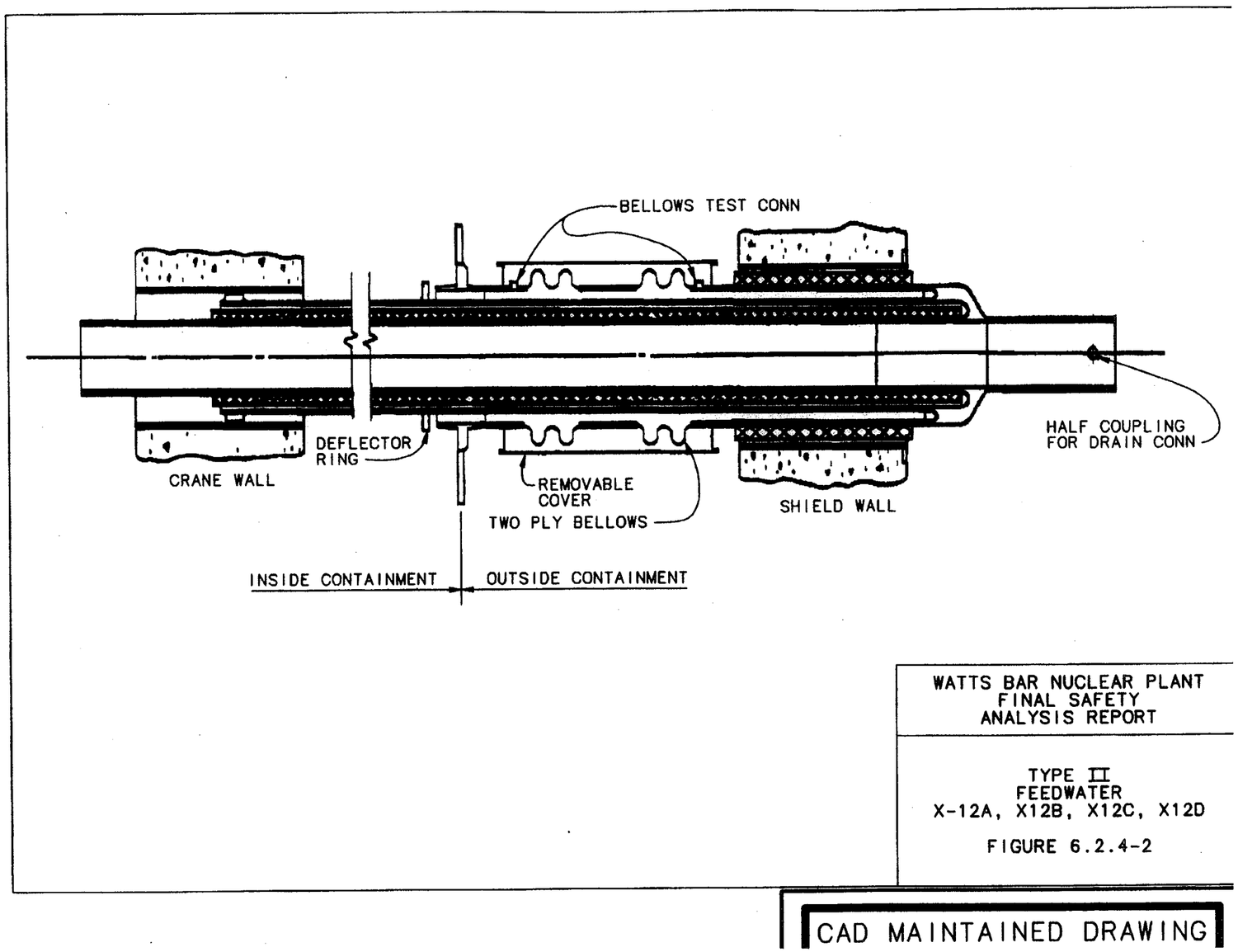

Figure 6.2.4-2 Type II, Feedwater X-12A, X-I2B, X-12C, X-12D

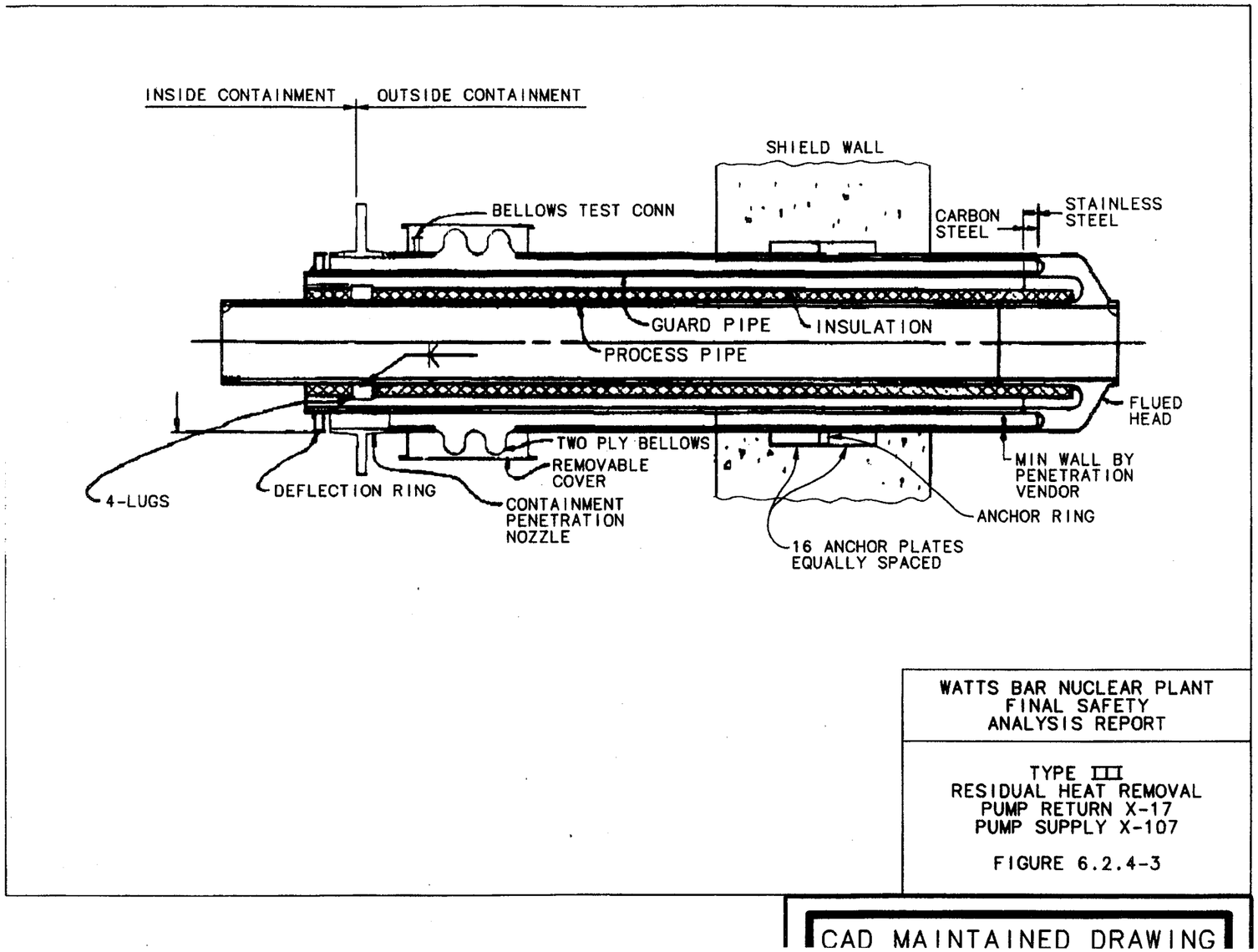

Figure 6.2.4-3 Type III, Residual Heat Removal Pump Return X-17, Pump Supply X-I07

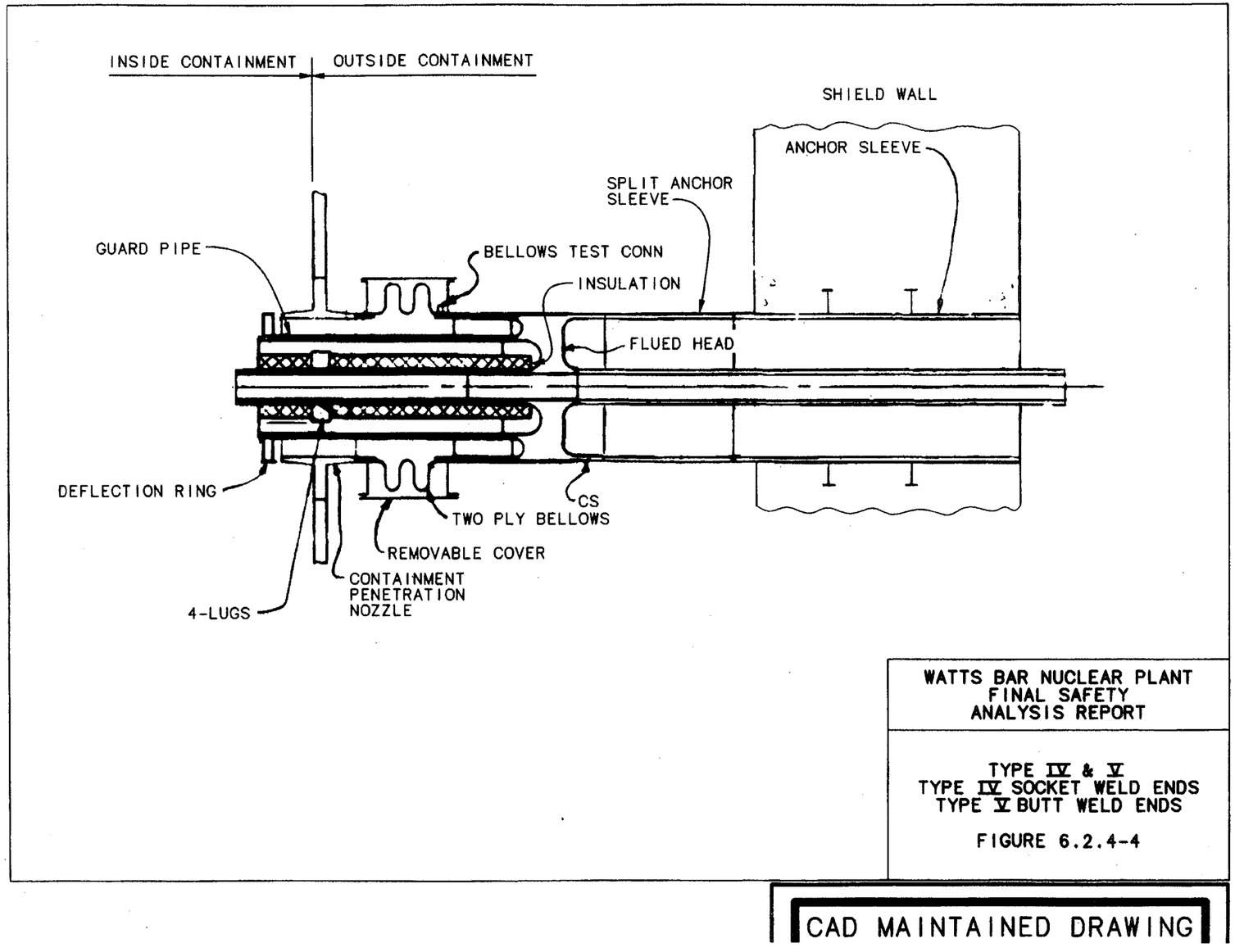

Figure 6.2.4-4 Type IV and V (Type IV Socket Weld Ends, Type V Butt Weld Ends)

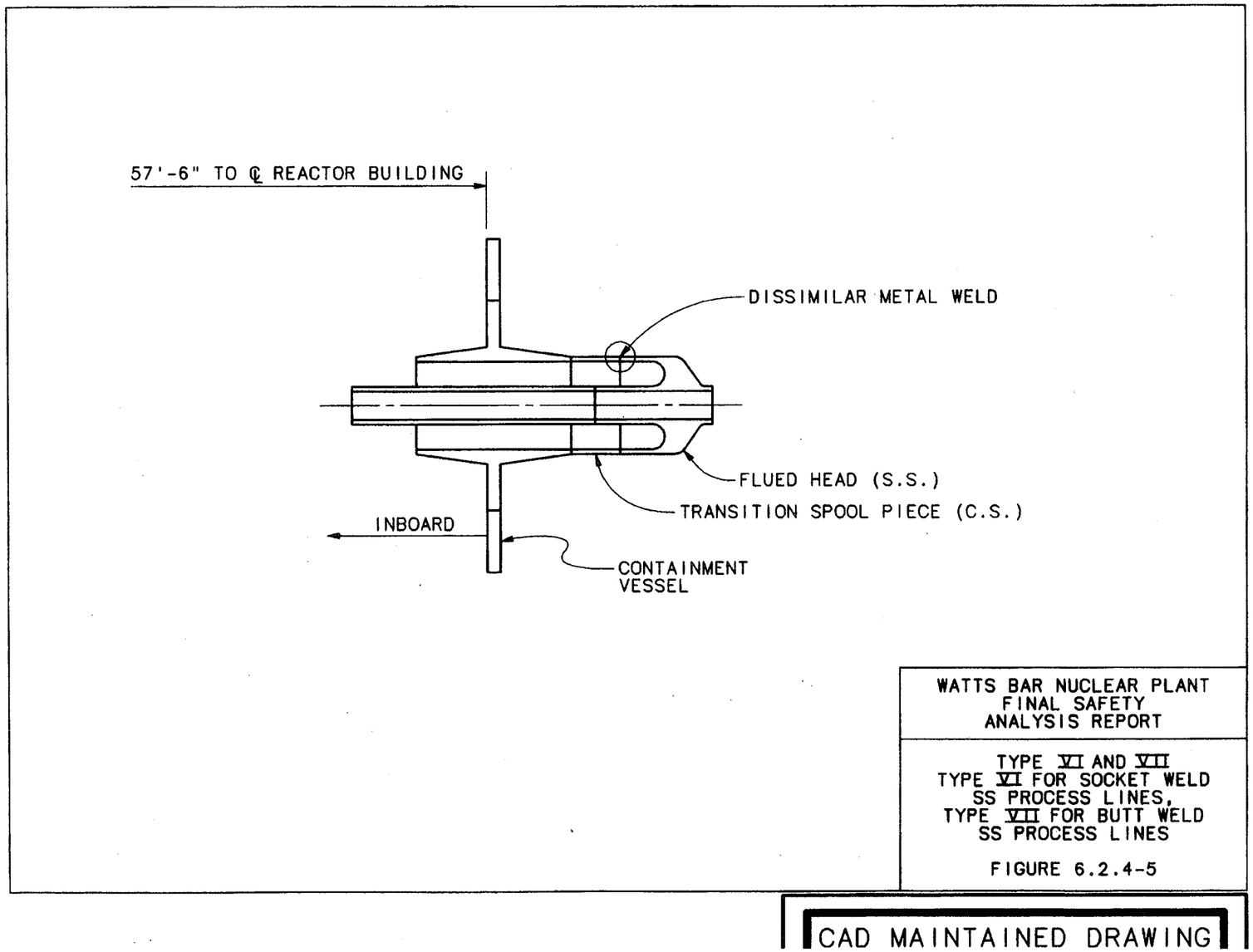

Figure 6.2.4-5 Type VI and VII (Type VI for Socket Weld SS Process Lines, Type VII for Butt Weld SS Process Lines)

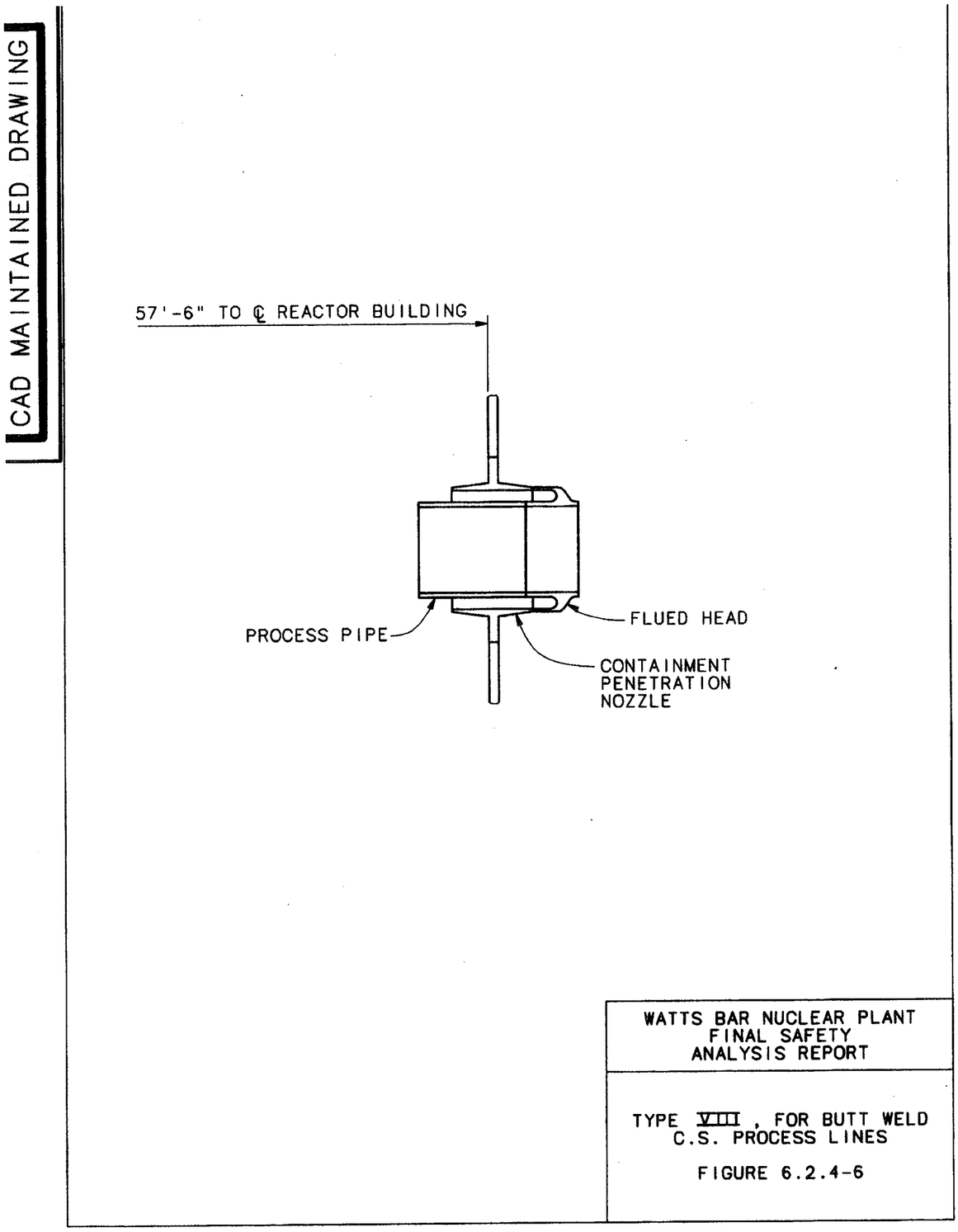

Figure 6.2.4-6 Type VIII, for Butt Weld C.S. Process Lines

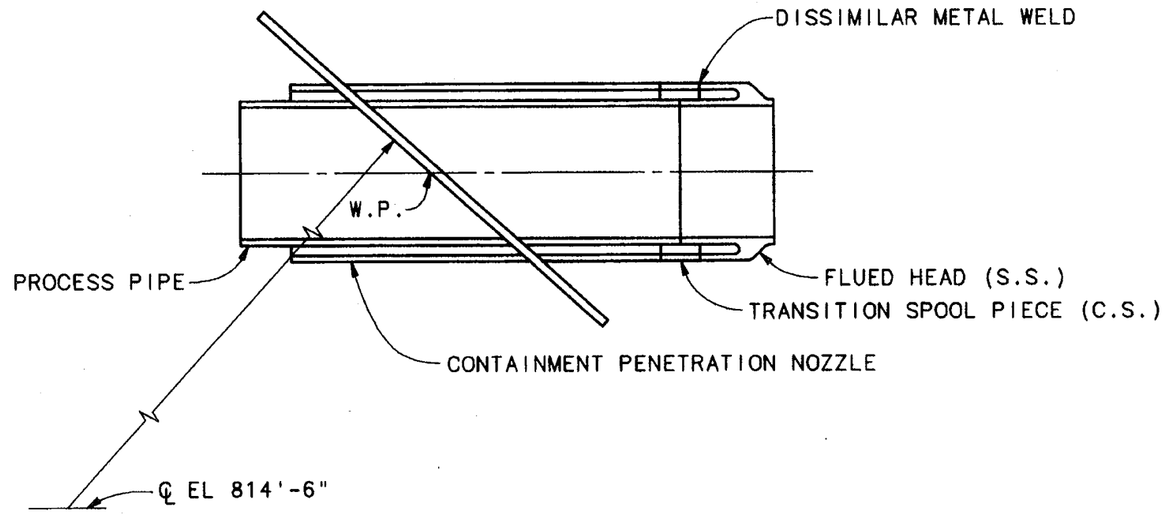

WATTS BAR NUCLEAR PLANT
FINAL SAFETY
ANALYSIS REPORT

TYPE IX
FOR SS PROCESS LINES

FIGURE 6.2.4-7

CAD MAINTAINED DRAWING

Figure 6.2.4-7 Type IX, for SS Process Lines

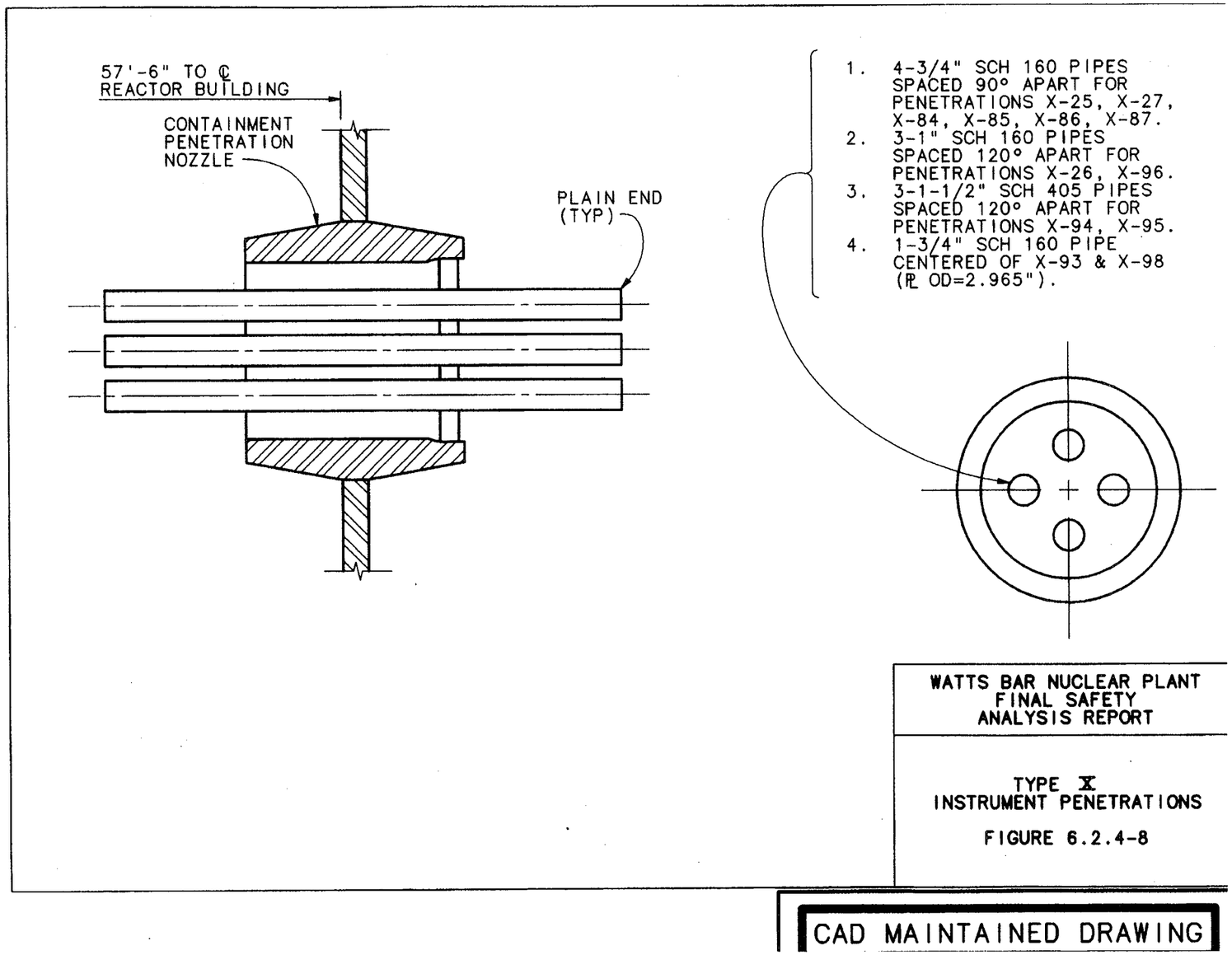

Figure 6.2.4-8 Type X, Instrument Penetrations

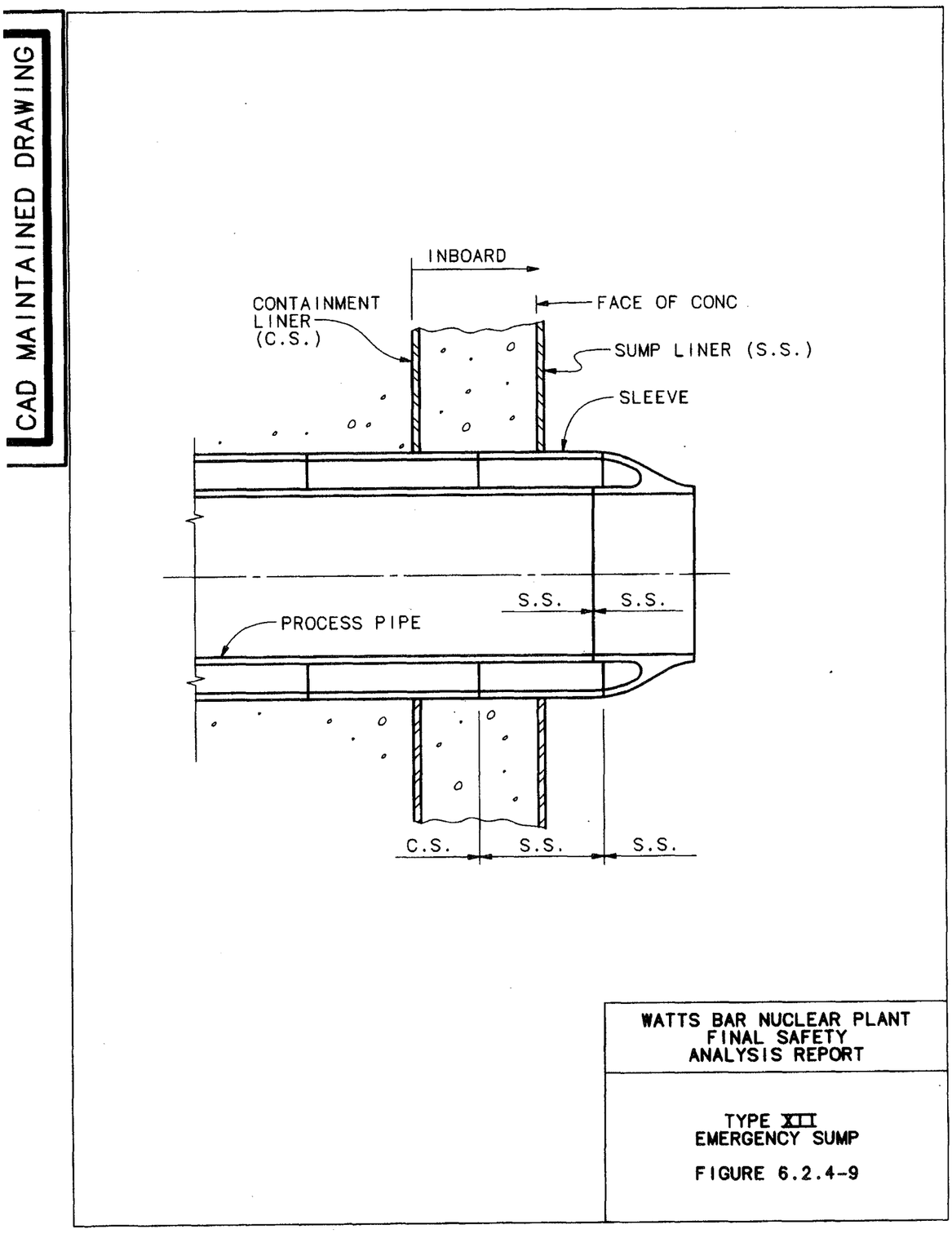

Figure 6.2.4-9 Type XII, Emergency Sump

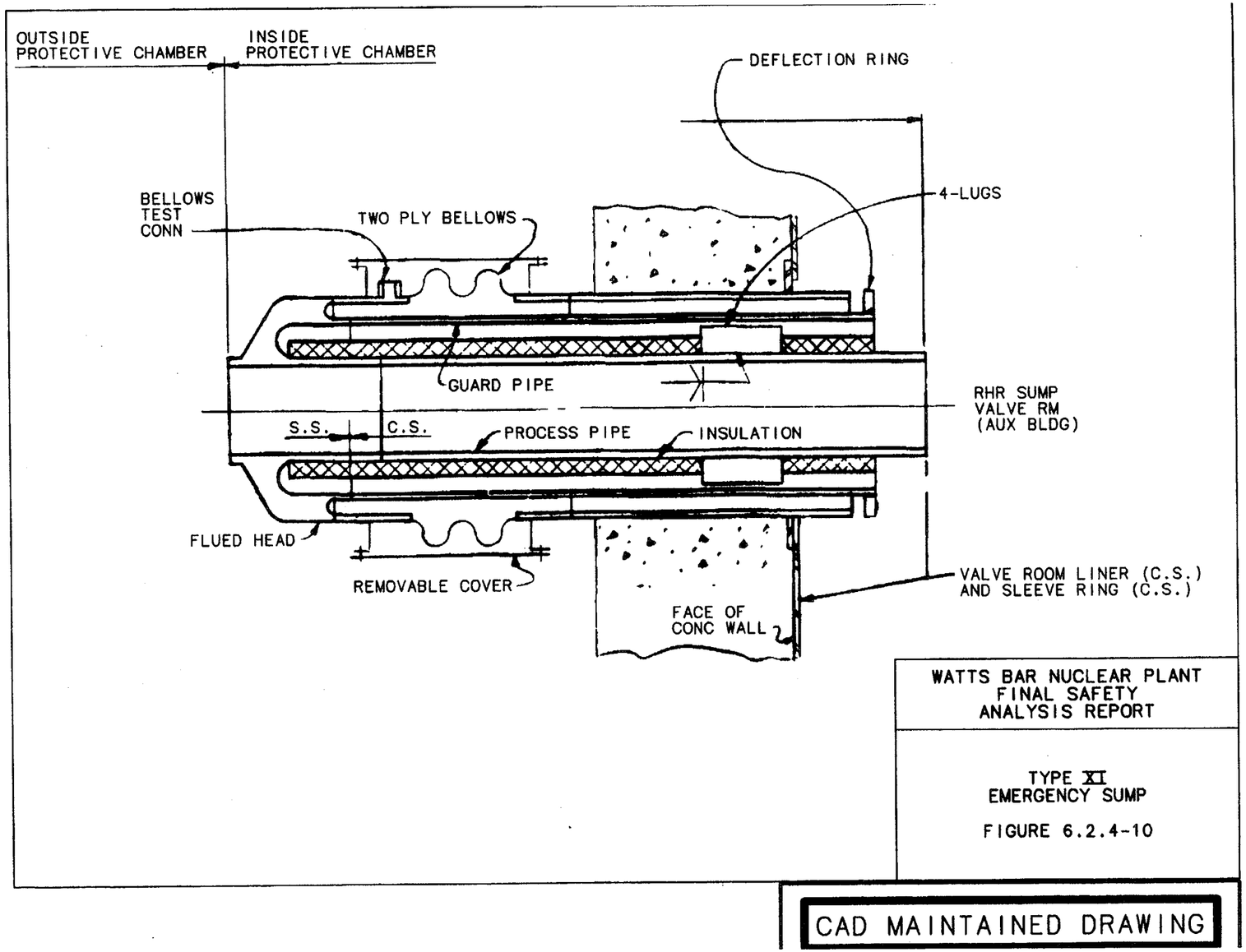

Figure 6.2.4-10 Type XI, Emergency Sump

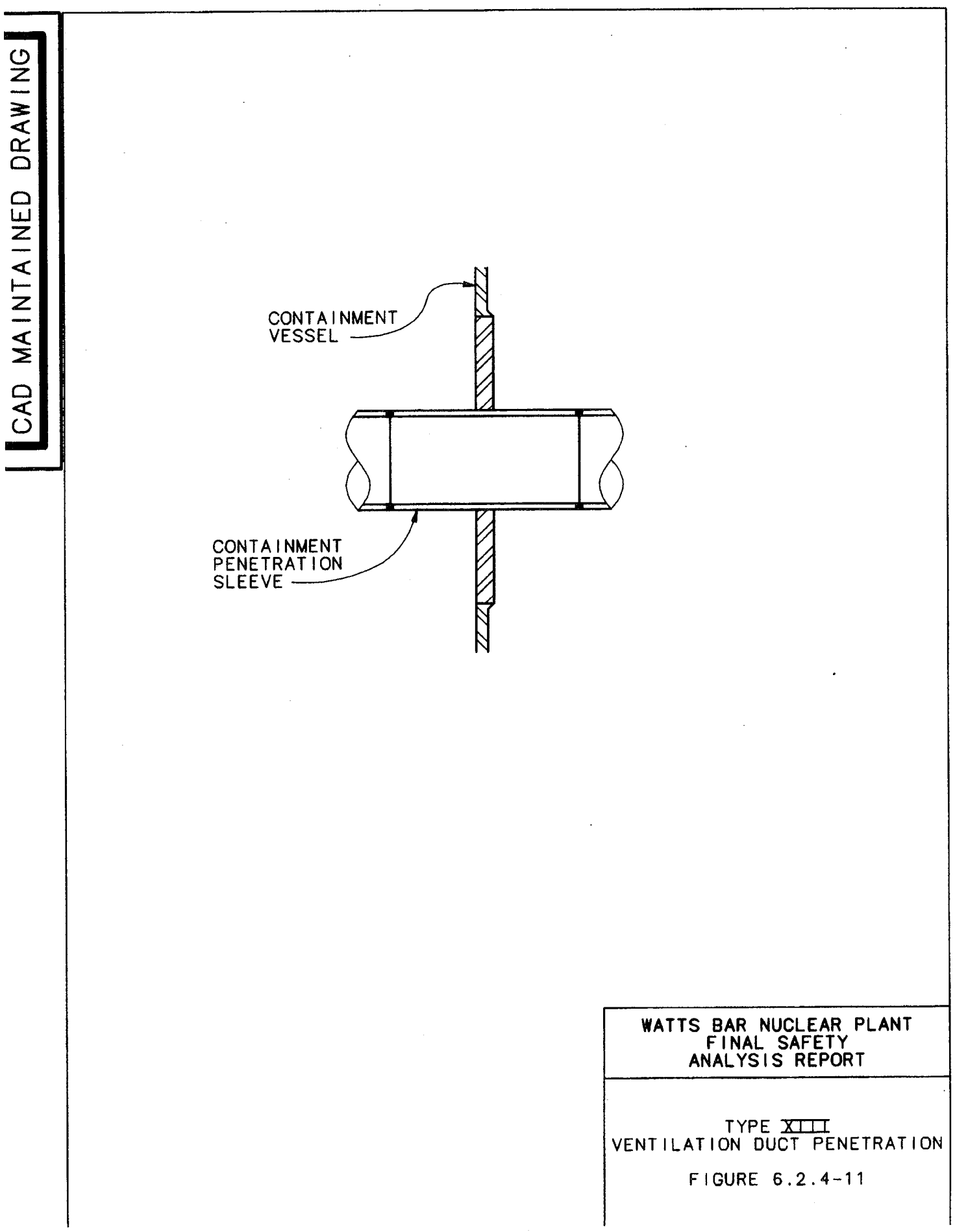

Figure 6.2.4-11 Type XIII, Ventilation Duct Penetration

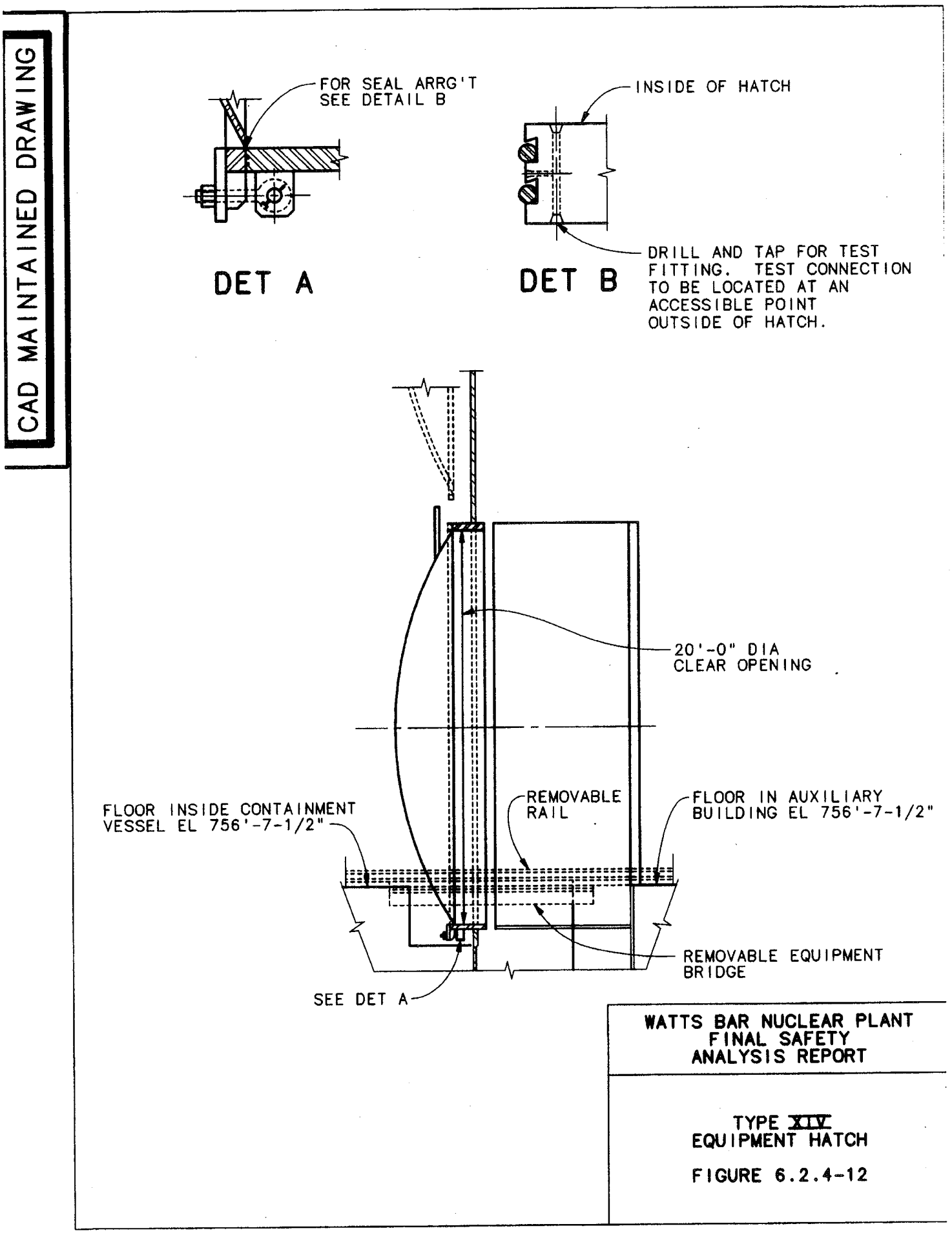

Figure 6.2.4-12 Type XIV, Equipment Hatch

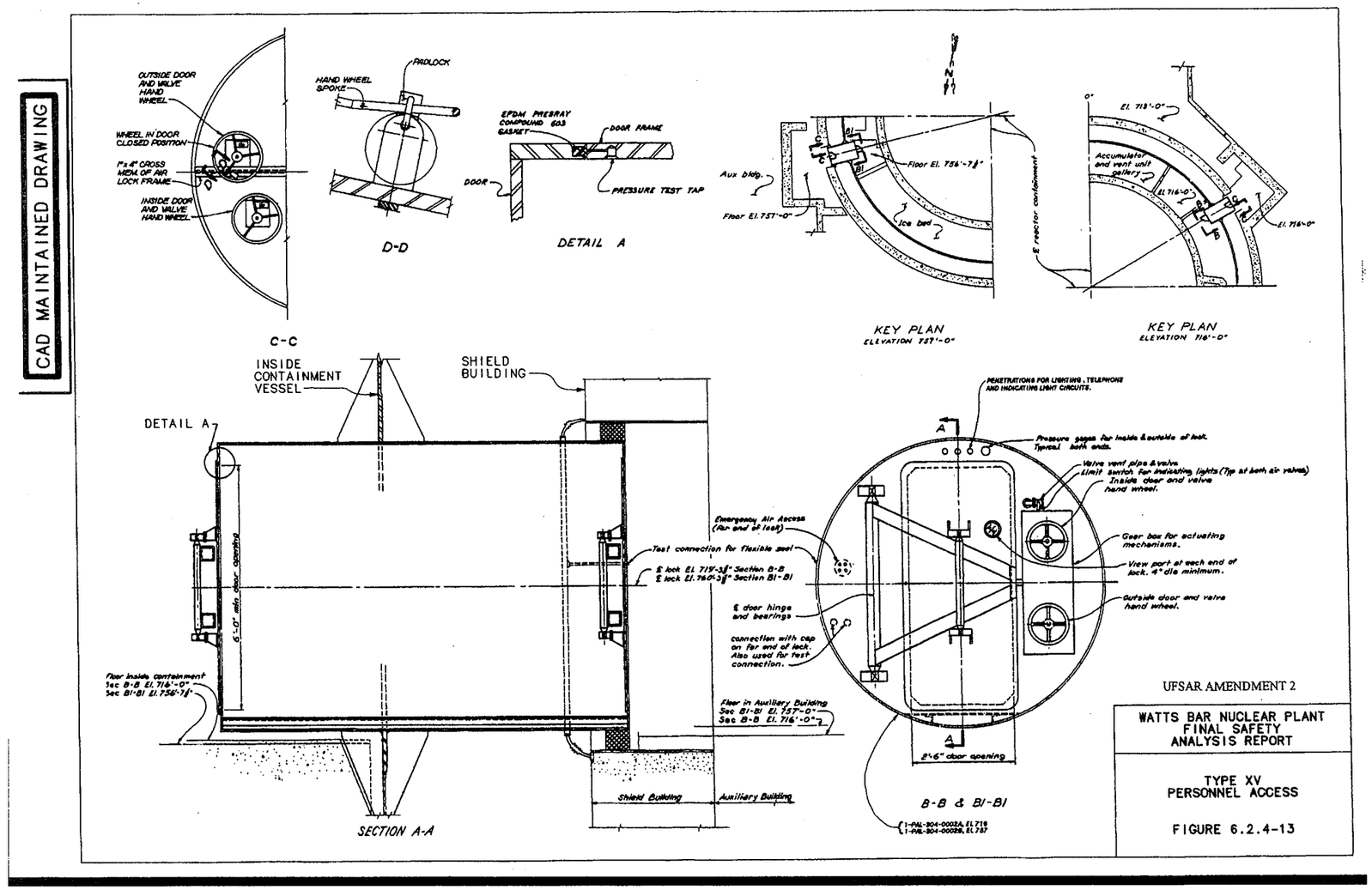

Figure 6.2.4-13 Type XV, Personnel Access

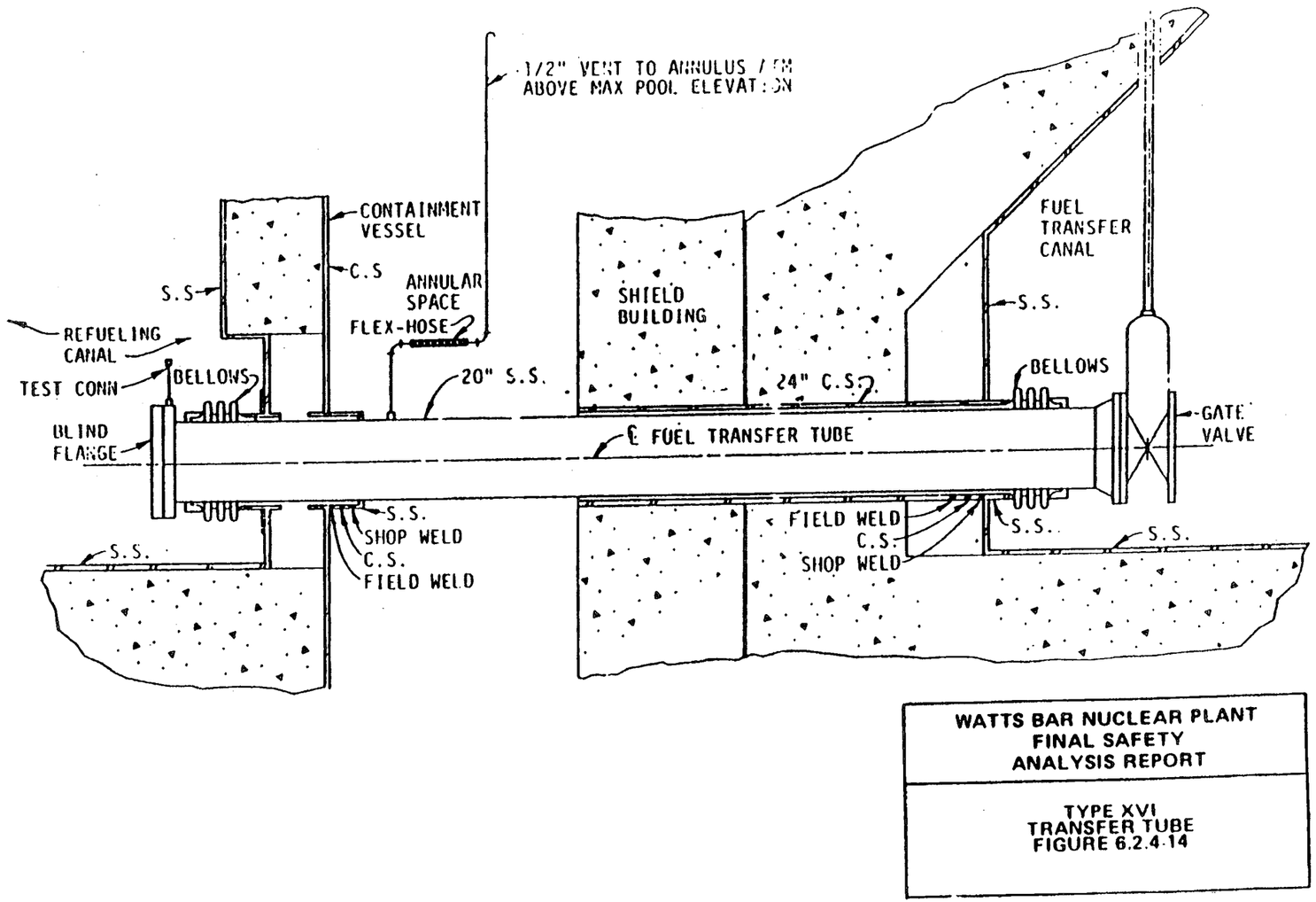

Figure 6.2.4-14 Type XVI, Transfer Tube

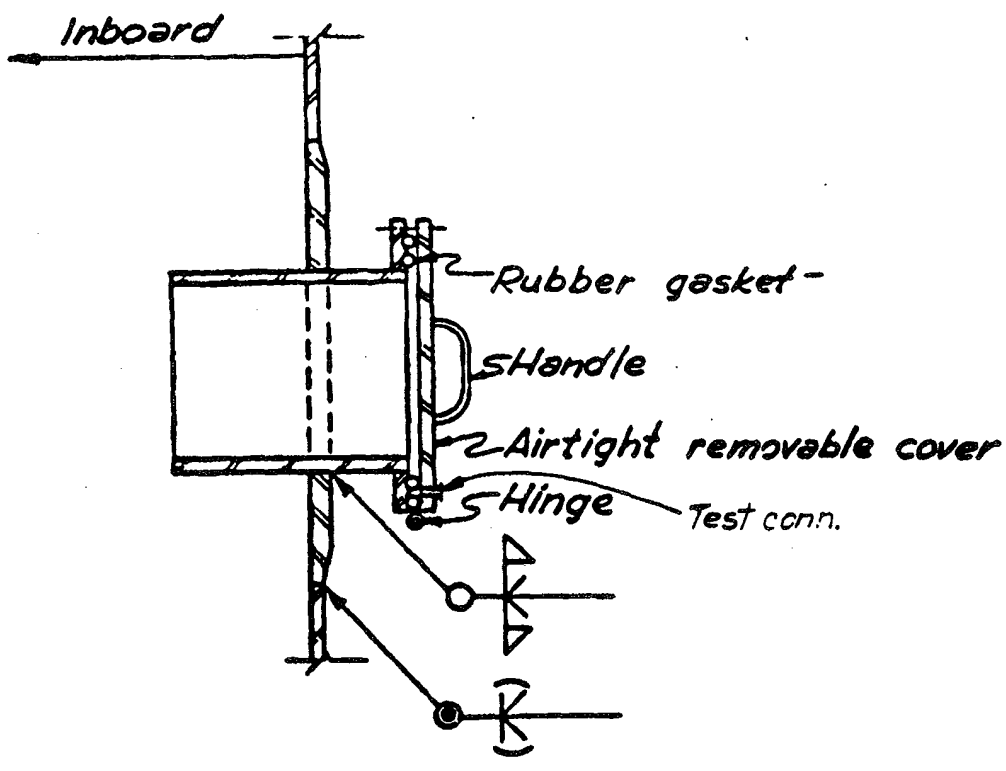

Figure 6.2.4-15 Type XVII, Thimble Renewal Line

Figure 6.2.4-15 Type XVII, Incore Instrumentation Thimble Assembly Renewal Line

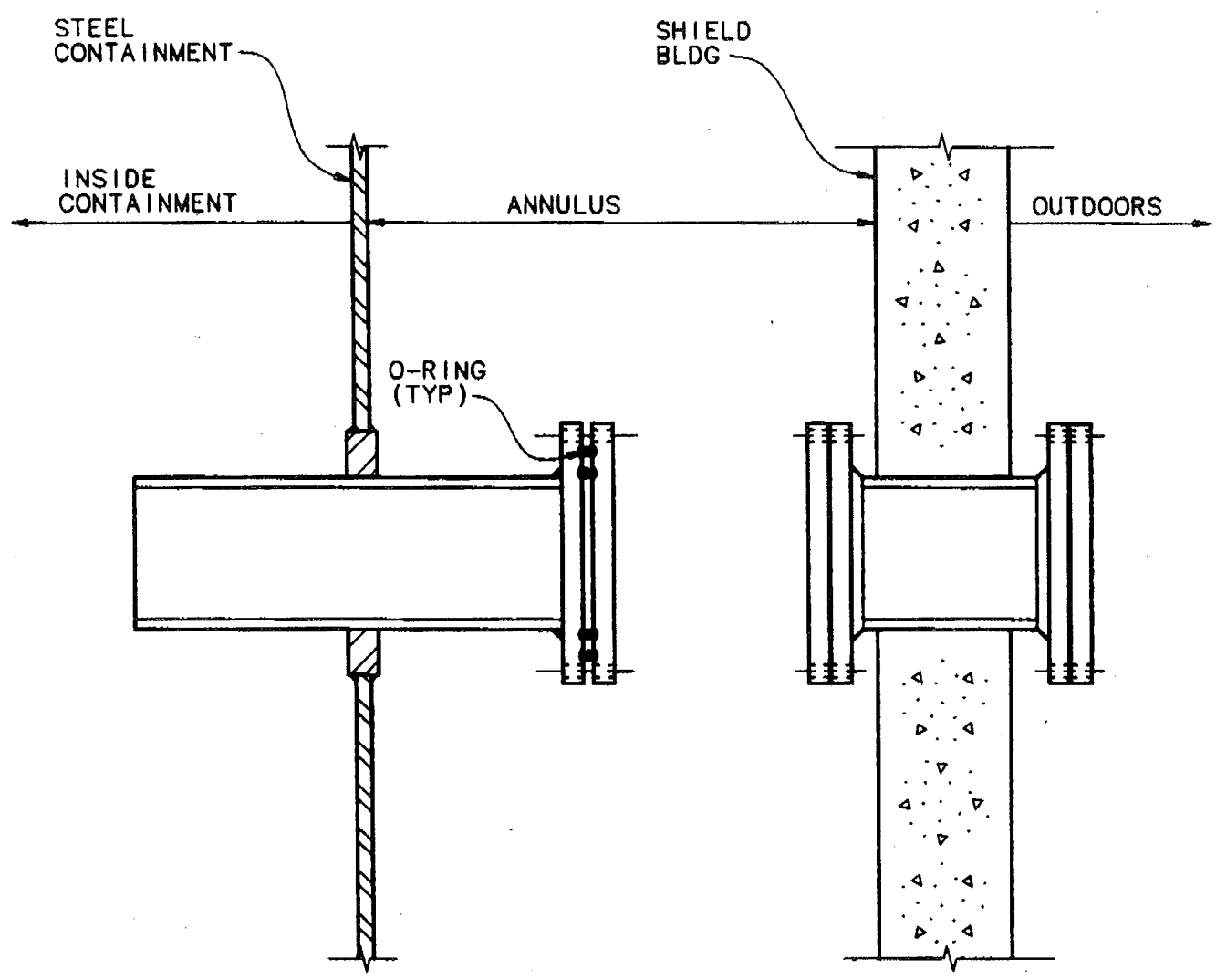

UFSAR AMENDMENT 1

WATTS BAR NUCLEAR PLANT
FINAL SAFETY
ANALYSIS REPORT

TYPE XVIII
ICE BLOWING LINE

FIGURE 6.2.4-16

PROCADAM MAINTAINED DRAWING
THIS CONFIGURATION CONTROL DRAWING IS MAINTAINED BY THE TVA CAD UNIT AND IS NOW PART OF THE TVA CADAM DATABASE.

Figure 6.2.4-16 Type XVIII, Ice Blowing Line

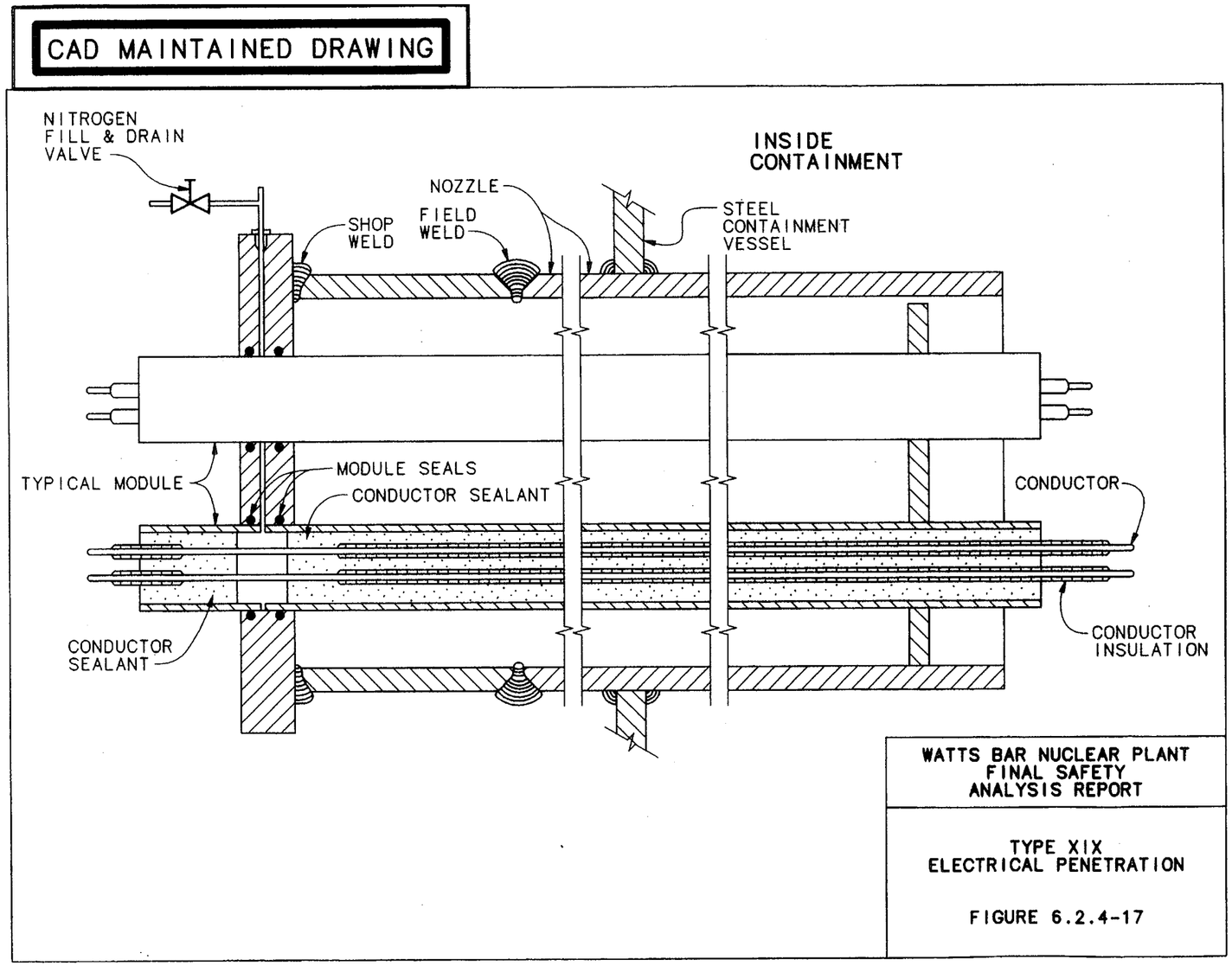

Figure 6.2.4-17 Type XIX, Electrical Penetration

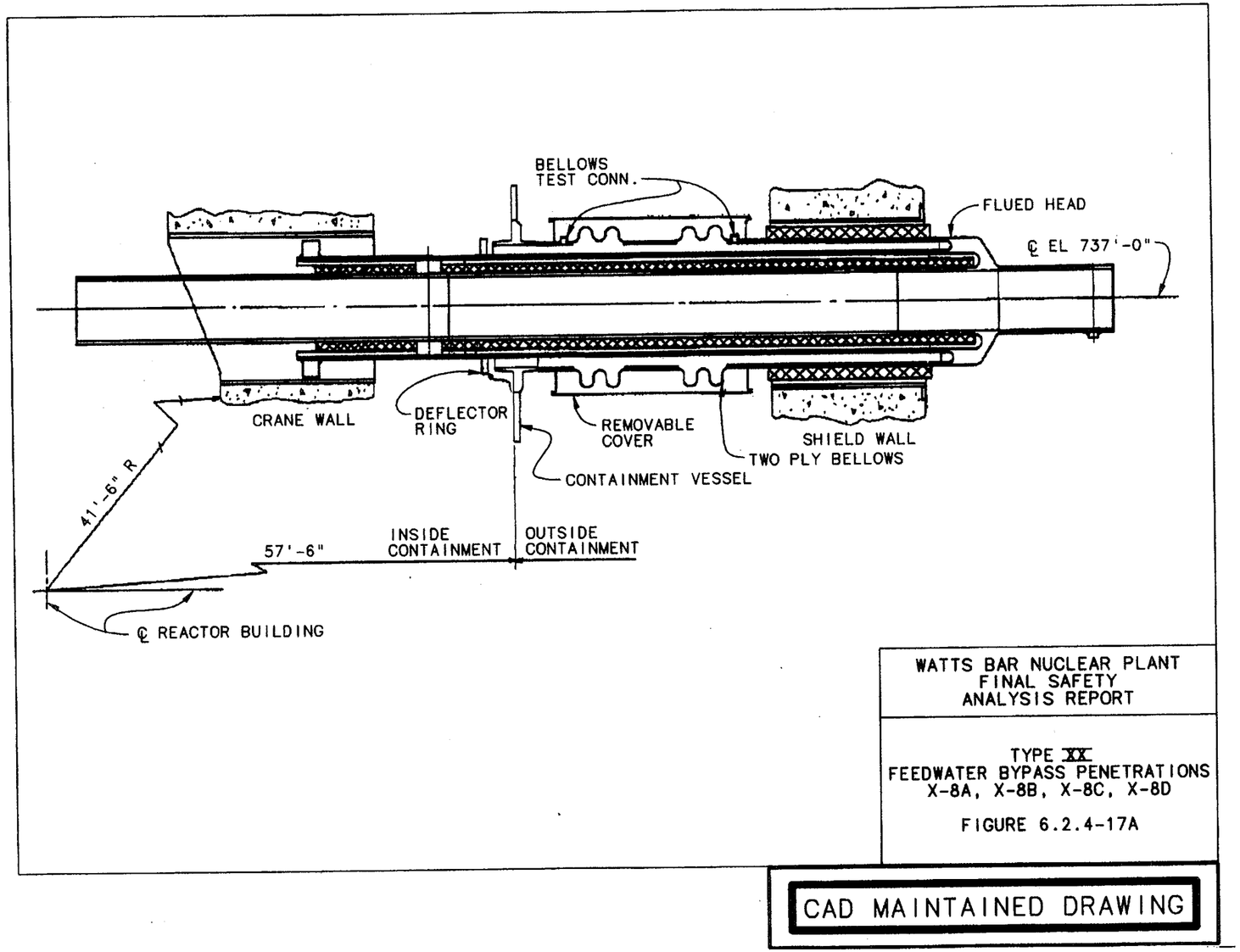

Figure 6.2.4-17A Type XX Feedwater Bypass Penetrations X-8A, X-8B, X-8C, X-8D

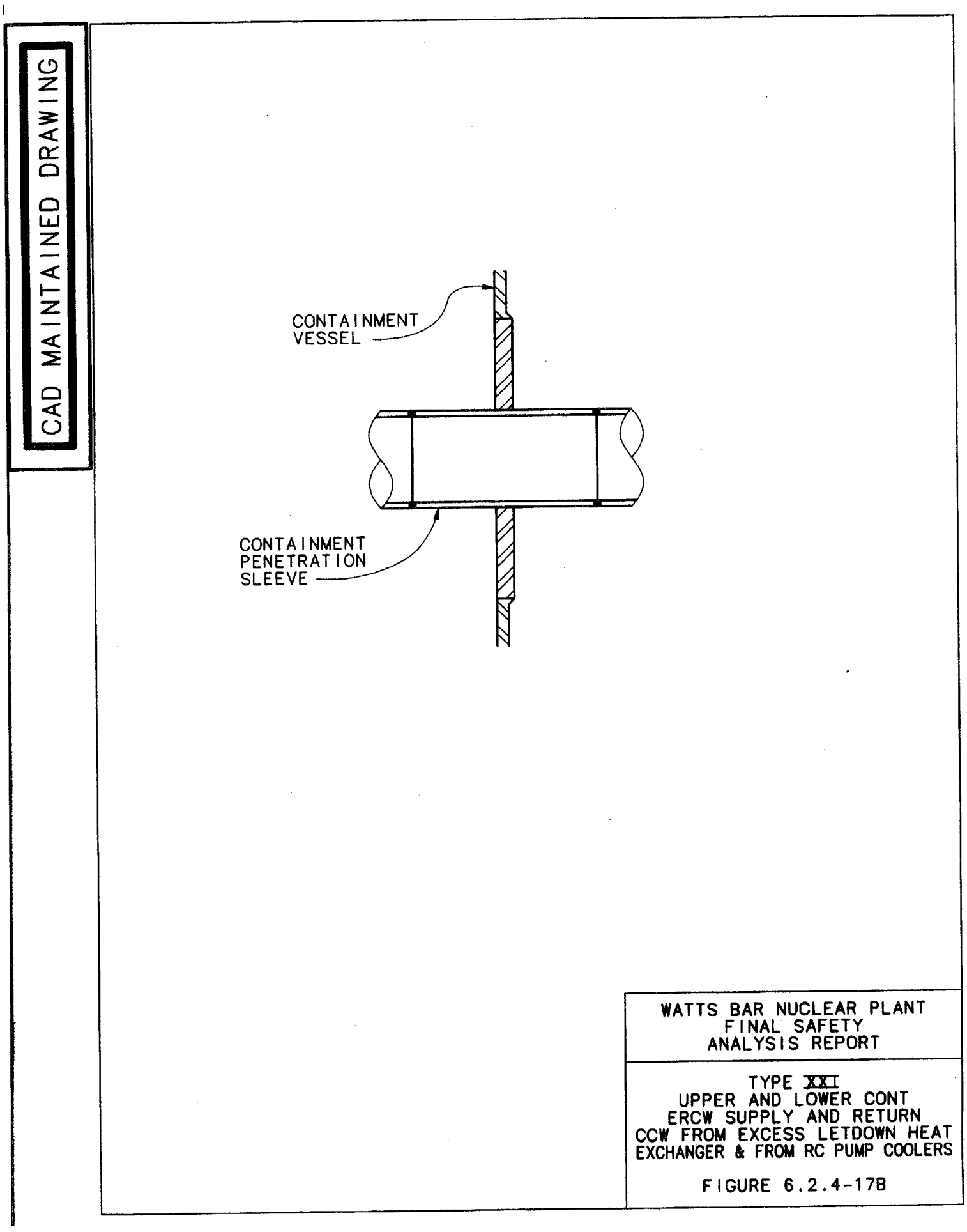

Figure 6.2.4-17B Type XXI, Upper And Lower Containment ERCW Supply And Return CCW From Excess Letdown Heat Exchanger and from Pump Odolers

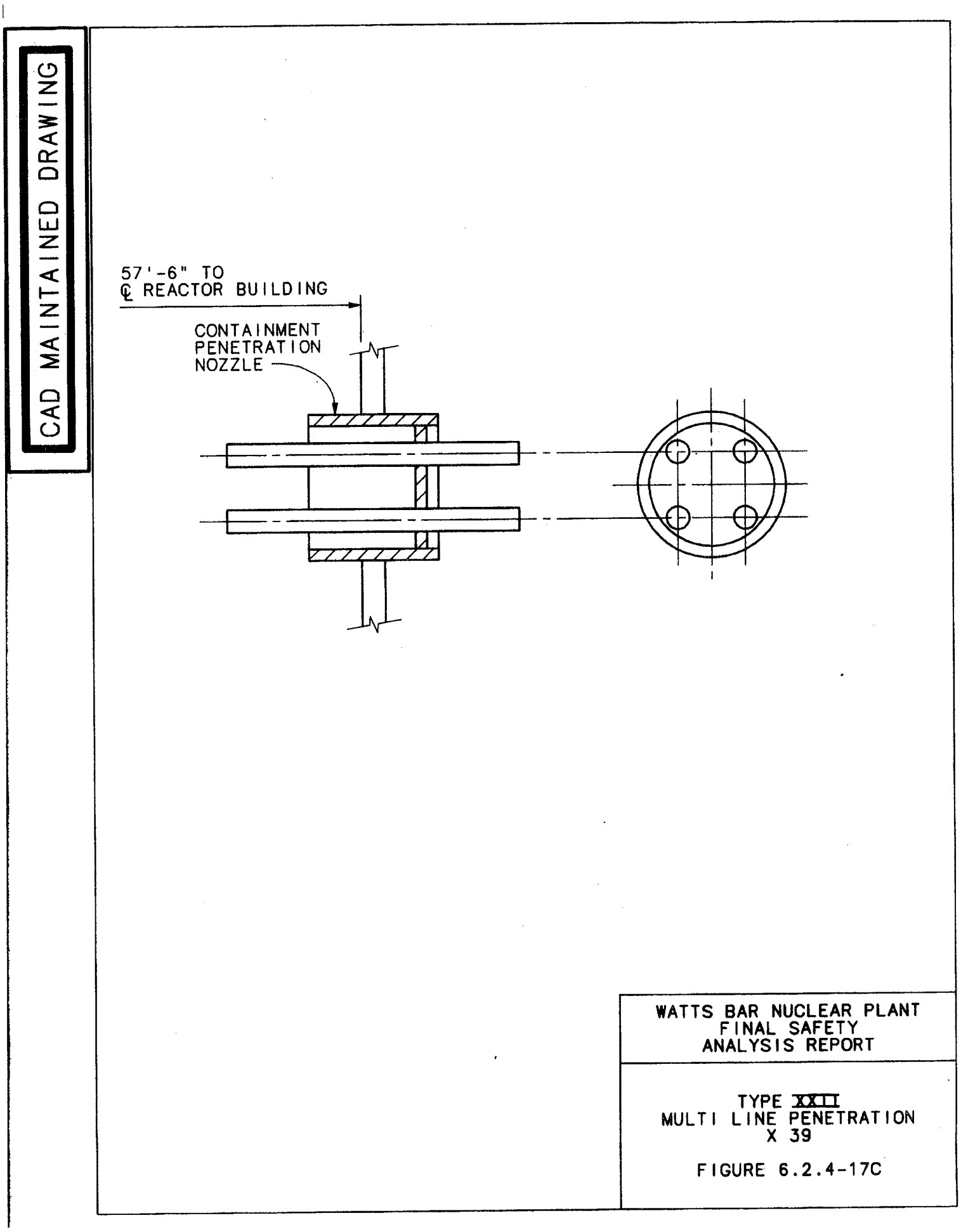

Figure 6.2.4-17C Type XXII Multi Line Penetration X-39

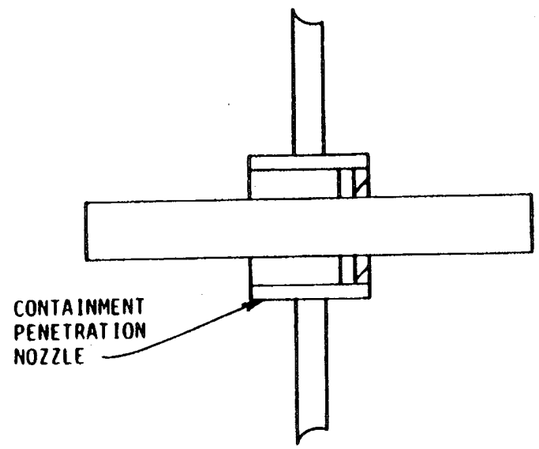

WATTS BAR NUCLEAR PLANT
FINAL SAFETY
ANALYSIS REPORT

TYPE XXIII
INSTRUMENT ROOM CHILLED
H2O SUPPLY AND RETURN
FIGURE 6.2.4-17D:

Figure 6.2.4-17D Type XXIII Instrument Room Chilled H_20 Supply and Return

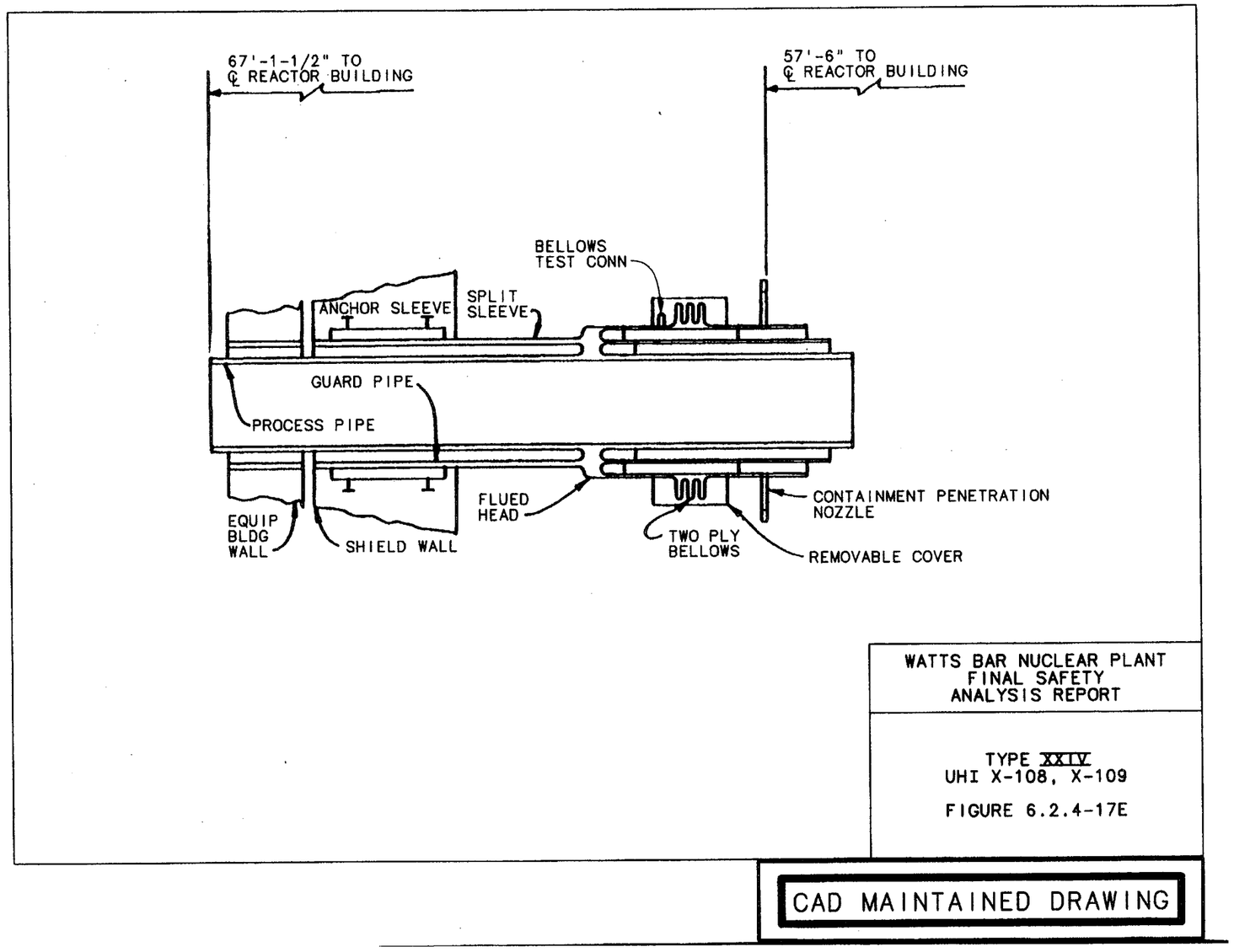

Figure 6.2.4-17E Type XXIV UHI X-I08, X-109

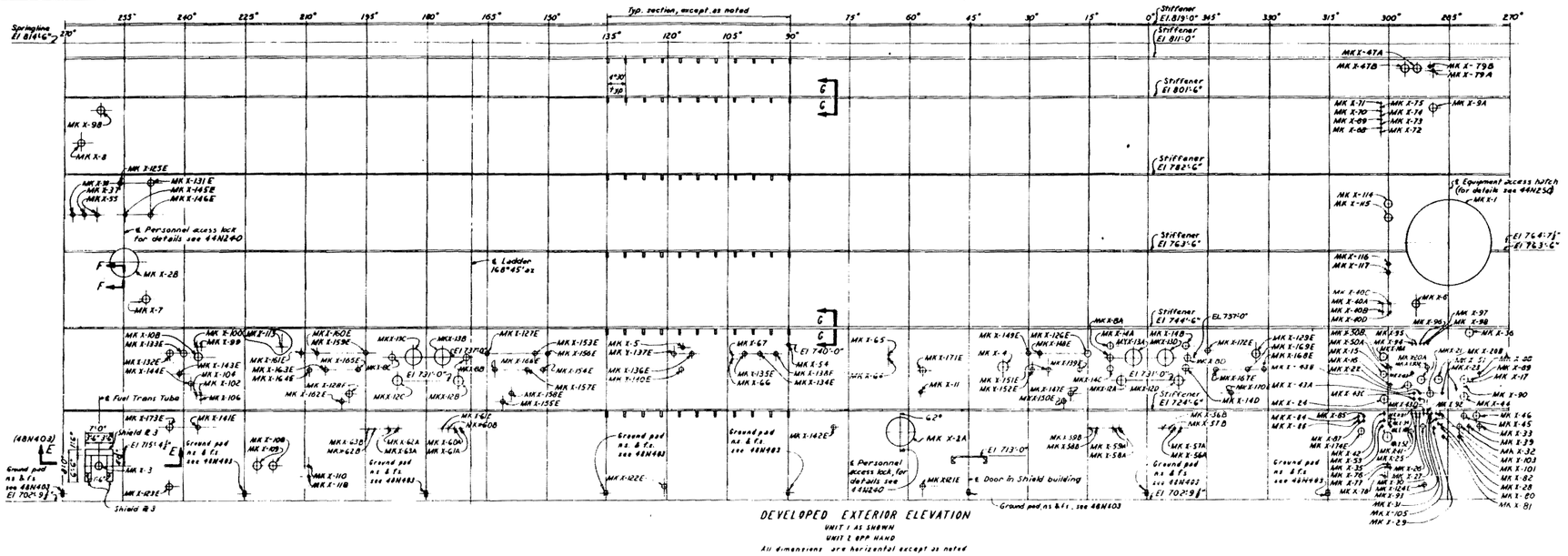

Revised by Amendment 52

WATTS BAR NUCLEAR PLANT
FINAL SAFETY
ANALYSIS REPORT

MECHANICAL CONTAINMENT
PENETRATION
TVA DWG NO. 48N405 R5
FIGURE 6.2.4-18

Figure 6.2.4-18 Mechanical Containment Penetration

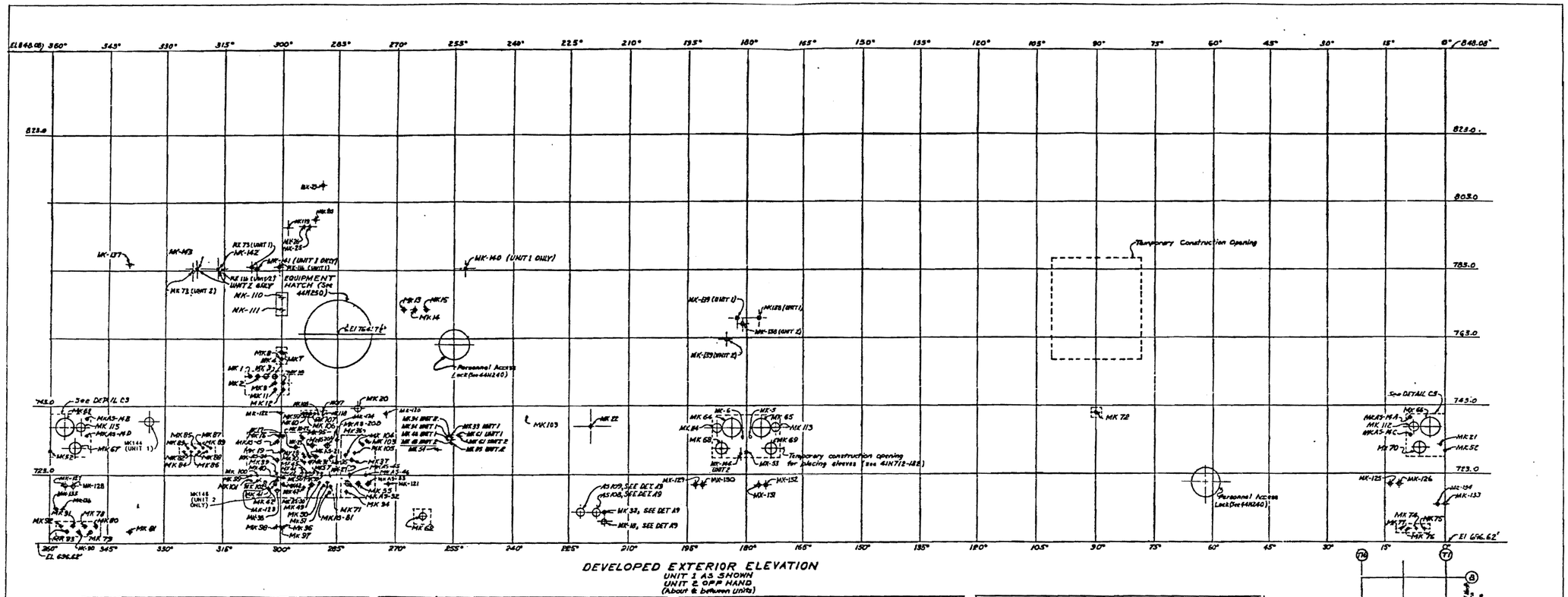
DEVELOPED EXTERIOR ELEVATION
UNIT 1 AS SHOWN
UNIT 2 OPP HAND
(About & between units)
EQUIPMENT HATCH (See 44N250)
Temporary Construction Opening
Personnel Access Lock (See 44N240)
Temporary construction opening for placing sleeves (see 41N712-182)
See DETAIL C3
See DETAIL C5
MK-137
MK-143
MK-140 (UNIT 1 ONLY)
MK-159 (UNIT 1)
MK-158 (UNIT 2)
MK-139 (UNIT 2)
MK 72
MK 73 (UNIT 2)
MK 73 (UNIT 1)
MK-142
MK-141 (UNIT 2 ONLY)
MK-141 (UNIT 1 ONLY)
MK-110
MK-111
MK 13
MK 15
MK 14
MK 109
MK 22
MK 65
MK 69
MK 113
MK-53
MK-152
MK-151
MK-150
MK-129
MK-125
MK-126
MK-124
MK-133
MK 21
MK 52
MK 70
MK 112
MK 74
MK 75
MK 76
MK 78
MK 79
MK 80
MK 81
MK 93
MK 90
MK 62
MK 71
MK 34
MK 35
MK 36
MK 37
MK 38
MK 20
MK 104
MK 105
MK 103
MK 115
MK 67
MK 68
MK 64
MK 84
MK 85
MK 87
MK 89
MK 86
MK 88
MK 101
MK 100
MK 102
MK 99
MK 98
MK 97
MK 96
MK 95
MK 94
MK 91
MK 92
MK 93
MK 122
MK 123
MK 121
MK 128
MK 127
MK 135
MK 136
MK 137
MK 138
MK 139
MK 140
MK 141
MK 142
MK 143
MK 144
MK 145
MK 146
MK 147
MK 148
MK 149
MK 150
MK 151
MK 152
MK 153
MK 154
MK

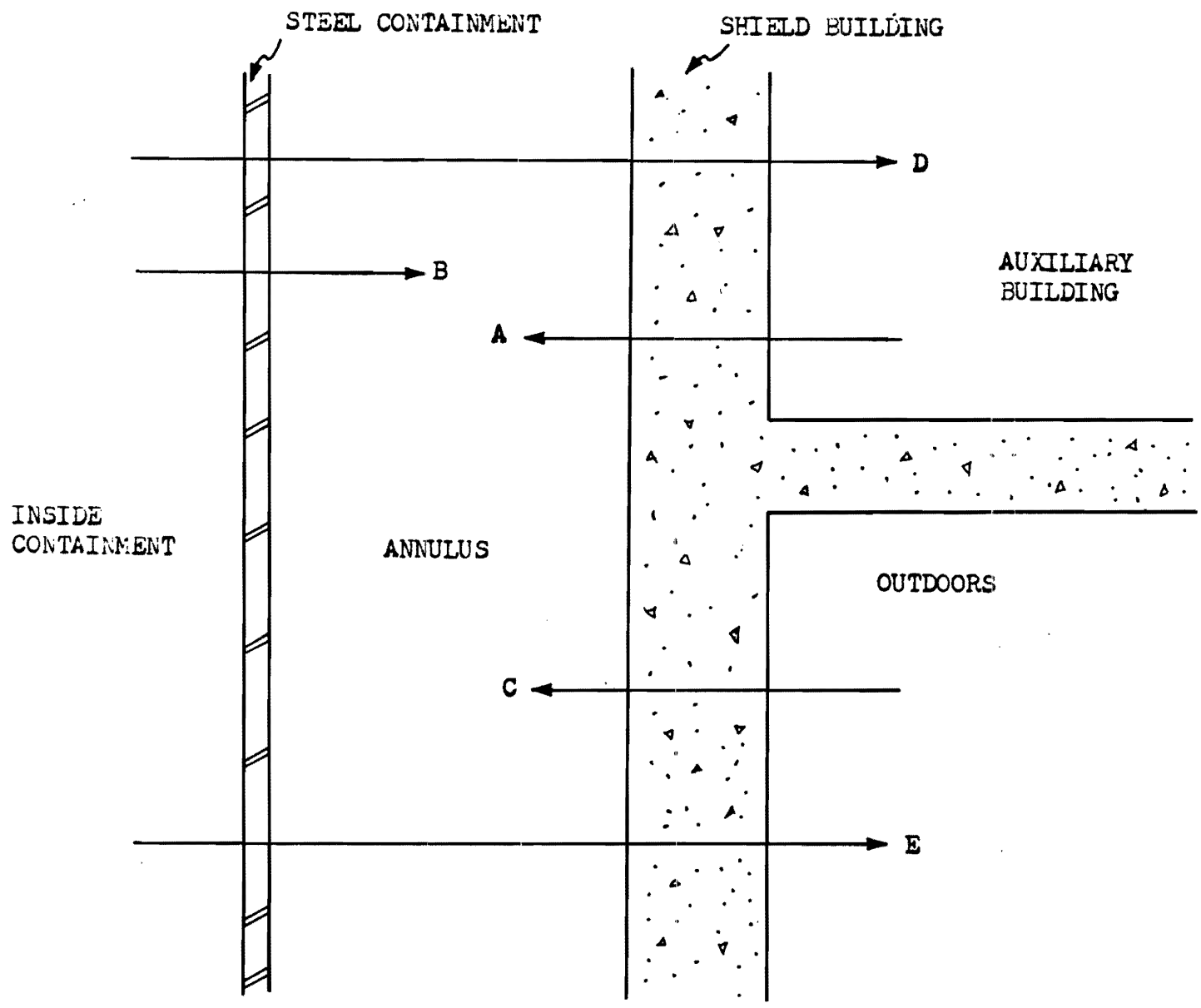

Figure 6.2.4-20 Schematic Diagram of Leakage Paths

Figure 6.2.4-20 Schematic Diagram of Leakage Paths

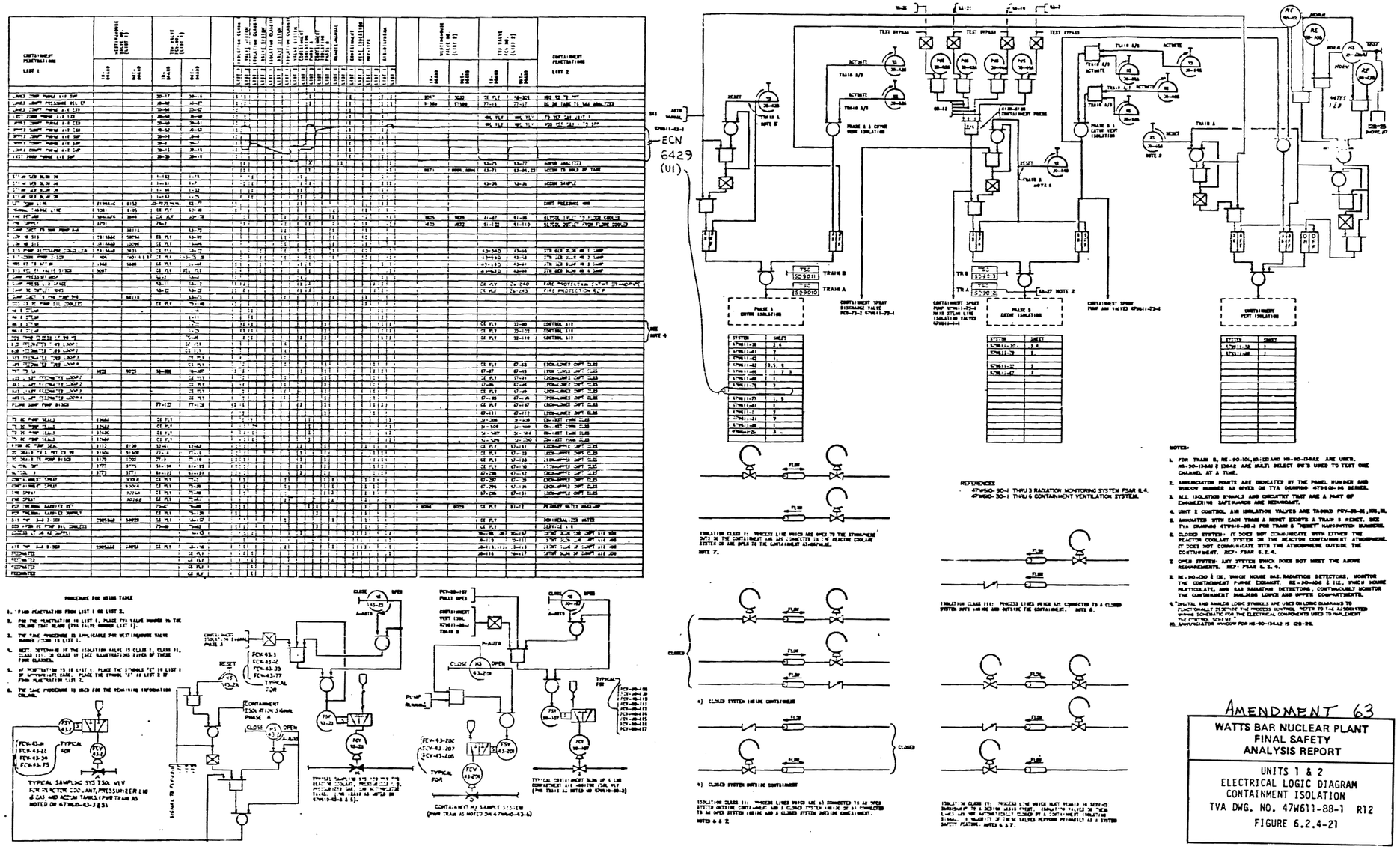

Figure 6.2.4-21 Electrical Logic Diagram Containment Isolation

Figure 6.2.4-22A through 6.2.4-22II
Deleted by Amendment 65

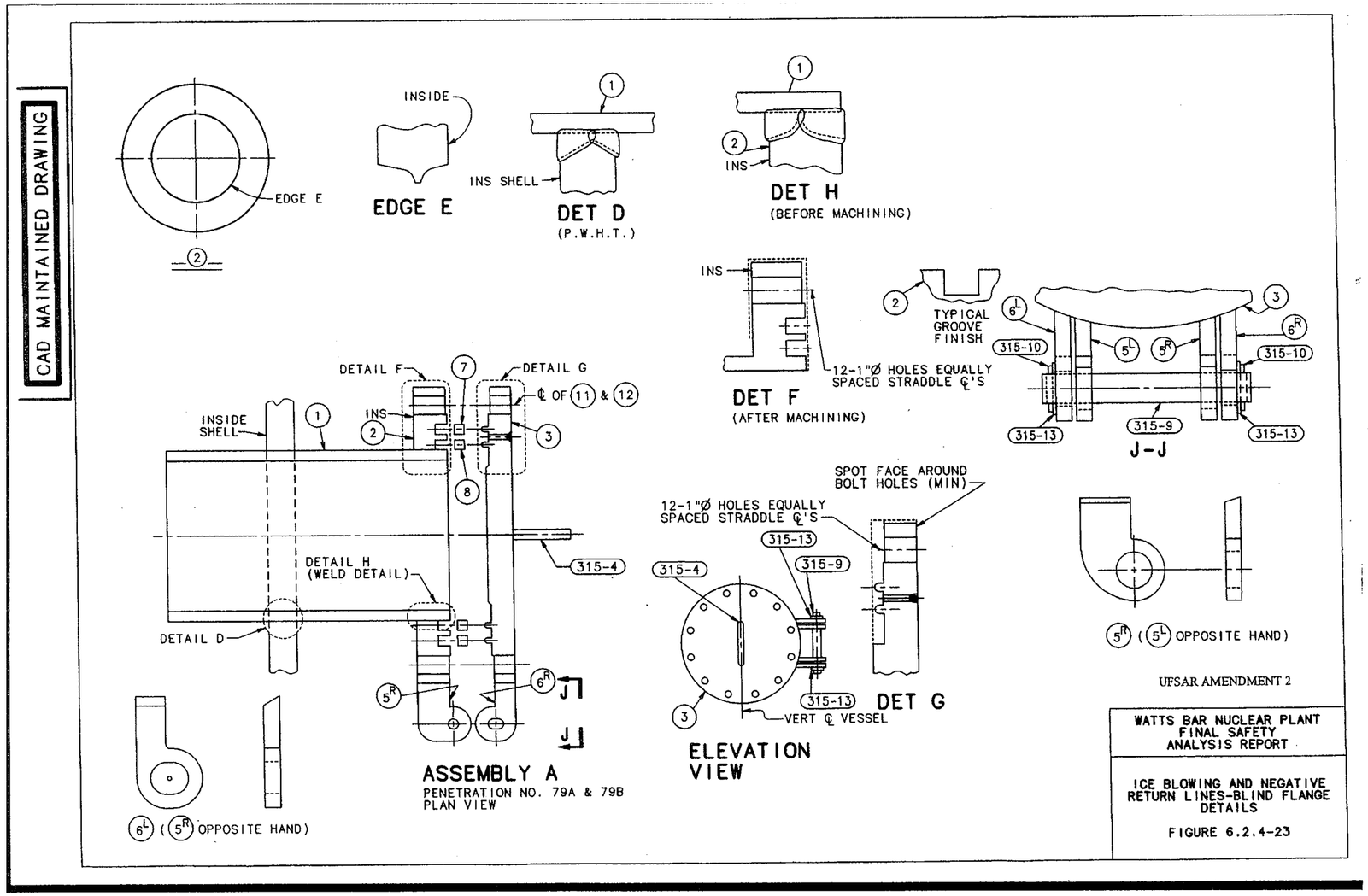

Figure 6.2.4-23 Ice Blowing and Negative Return Lines - Blind Flange Details

6.2.5 Combustible Gas Control in Containment

The containment combustible gas control system is designed to control the concentration of hydrogen that may be released into the containment following a beyond-design-basis accident to ensure that containment structural integrity is maintained. The combustible gas control system consists of the containment air return system, the hydrogen analyzer system (HAS) and the hydrogen mitigation system (HMS) which conform to 10 CFR 50.44 requirements.

6.2.5.1 Design Bases

In an accident more severe than the design-basis loss-of-coolant accident, combustible gas is predominantly generated within containment as a result of the following:

(1) Fuel clad-coolant reaction between the fuel cladding and the reactor coolant.

(2) Molten core-concrete interaction in a severe core melt sequence with a failed reactor vessel.

If a sufficient amount of combustible gas is generated, it may react with the oxygen present in the containment at a rate rapid enough to lead to a containment breach or a leakage rate in excess of Technical Specification limits. Additionally, damage to systems and components essential to continued control of the post-accident conditions could occur.

The systems provided for combustible gas control have the following functional and mechanical requirements:

(1) The air return fans enhance the ice condenser and containment spray heat removal operation by circulating air from the upper compartment to the lower compartment through the ice condenser, and then back to the upper compartment. Hydrogen concentration is limited in potentially stagnant regions by providing air flow in these regions.

(2) The HAS provides the capability for extracting a sample and obtaining the measurement necessary to determine the volume percent concentration for hydrogen present in the sample. The system provides indication and alarms of volume percent concentrations in the main control room. Indication is also provided at the remote control center.

(3) The HMS is designed to increase the containment capability to accommodate hydrogen that could be released during a degraged core accident. The system is based on the concept of controlled ignition using thermal igniters.

(4) The air return fans and HAS are designed to operate continuously during accident conditions. The HMS igniter assemblies are qualified for a 30 year life of operational cycles.

(5) The combustible gas control system is designed for periodic testing and inspection.

6.2.5.2 System Design

Containment Air Return System

Mixing of the containment atmosphere is accomplished by the containment air return system described in Section 6.8. The air return fans start automatically 9 ± 1 minutes after receipt of a Phase B isolation signal. In addition, the fans may be started manually.

The associated ductwork, which must remain intact following a LOCA to assure that no localized hydrogen concentration exceeds 4%, consists of (1) two 12-inch ducts (one associated with each air return fan intake) which draw air from the containment dome region, (2) one 8-inch duct which circles the containment removing air from accumulator rooms and other dead-ended spaces and terminates at each air return fan housing, (3) two 12-inch ducts which circle the crane wall, removing air from the steam generator and pressurizer compartments and terminate through two 8-inch ducts at each air return fan housing, (4) two 8-inch pipes (one connected to each air return fan housing) which remove air from the refueling canal, and (5) the main duct between upper and lower compartment through the divider deck, including the non-return dampers.

The ductwork described above is embedded in concrete, where possible, to prevent damage from buildup of pressure during a LOCA. Ductwork not protected by embedment is designed to withstand the LOCA environment. The air return system also includes heavy-duty backdraft dampers to prevent back flow from the lower compartment to the upper compartment under a differential pressure of 15 psig. These dampers prevent steam from bypassing the ice condenser during the initial blowdown. Figures 6.2.5-3, 6.2.5-4 and 6.2.5-5 are provided to show the routing of the recirculation ducts.

During the post-blowdown period, the pressure gradient between containment compartments is almost nonexistent and hydrogen can accumulate in potentially stagnant regions. The regions of concern are the ten dead-ended compartments: the four steam generator enclosures; the pressurizer enclosure; the four accumulator spaces; and the instrument room. The air return fans provide recirculation flow through the dead-ended compartments to prevent excessive hydrogen buildup. Each fan will mix 1,960 cfm form the enclosed areas in the lower compartment to the general lower compartment atmosphere.

Hydrogen Analyzer

The HAS provides the capability to extract air samples from containment and to determine volume percent concentration of hydrogen. The primary functions of the system include continuous sampling from a remote location, measurement of hydrogen partial pressure, visual indication of volume percent concentrations and hydrogen concentration alarms in the main control room.

The sampling system consists of a single, non-trained detection loop. The analyzer is fed by one process sample line and returns to containment on one process effluent line. This line is equipped with two manually controlled isolation valves on both the sample and return lines. The system is installed at two locations. The sample loop station, mounted inside the Annulus, consists of the detection chamber, pressure transducer, solenoid valves, condensate management components and check valves for directing sample through the loop.

The HAS remote control center is mounted is a mild environment in the Auxiliary Building where access is always permitted. The major components of the center include a PLC based signal conditioner/system controller, a remote touch screen display and the system switch panel.

Containment isolation valve hand switches, a hydrogen concentration indicator and alarms are provided in the main control room.

Upon actuation of the system, sample enters the loop assembly and passes through a “T” which separates the liquid and collects it in a condensate trap. The sample continues through a flow switch into the detection chamber. Inside the detection chamber, partial and total pressure measurements are obtained. The sample exits the detection chamber, passing through the sample pump which then drives the sample out of the loop assembly.

The analyzer is designed to continually measure hydrogen concentration following a beyond-design-basis accident. The analyzer is calibrated to measure hydrogen concentrations between zero and ten percent with an accuracy of ±0.2% hydrogen. A sample loop flow diagram is shown in Figure 6.2.5-6.

The hydrogen analyzer components are seismically supported.

Hydrogen Mitigation System

To assure that any hydrogen release would be ignited at containment locations as soon as the concentration exceeded the lower flammability limit, durable thermal igniters, capable of maintaining an adequate surface temperature, are used. An igniter developed by Tayco Engineering, operating at a nominal plant voltage of 120V AC, is used. The igniter has been shown by experiment to be capable of maintaining surface temperatures in excess of the required minimum for extended periods, initiating combustion and continuing to operate in various combustion environments.

The igniters in the HMS are equally divided into two redundant groups, each with independent and separate controls, power supplies and locations, to ensure adequate coverage even in the event of a single failure. Manual control of each group of igniters is provided in the main control room and the status (on-off) of each group is indicated there. A separate train of Class IE 480V AC auxiliary power is provided for each group of igniters and is backed by automatic loading onto the diesel generators upon loss of offsite power. Each individual circuit powers two igniters. See Figures 6.2.5-8 through 6.2.5-12 for igniter locations.

To assure adequate spatial coverage, 68 igniters are distributed throughout the various regions of the containment in which hydrogen could be released or to which it could flow in significant quantities (see Figures 6.2.5-8 through 6.2.5-12). There are at least two igniters, controlled and powered redundantly located in each of these regions. Following a degraded core accident, any hydrogen which is produced is released into the lower compartment inside the crane wall. To cover this region, 22 igniters (equally divided between trains) are provided. Eight of these are distributed on the reactor cavity wall exterior and crane wall interior at an intermediate elevation to ensure the partial burning that accompanies upward flame propagation.

Two igniters are located at the lower edge of each of the five enclosures for the four steam generators and the pressurizer, two in the top of the pressurizer enclosure and another pair above the reactor vessel in the cavity. These 22 lower compartment igniters help prevent flammable mixtures from entering the ice condenser. Any hydrogen not burned in the lower compartment is carried up through the ice condenser and into its upper plenum. Since steam is removed from the mixture as it is passed through the ice bed, mixtures that were nonflammable in the lower compartment tend to be flammable in the ice condenser upper plenum. This phenomenon is supported by the CLASIX containment analysis code which predicts more sequential burns to occur in the upper plenum than in any other region. Four igniters are located around the upper compartment dome, four at intermediate elevations on the outside of the steam generator enclosures, four more around the top inside of the crane wall and on above each of the two air return fans. The air return fans provide recirculation flow from the upper compartment through several dead-ended compartments (see Section 6.2.1.3.3) back into the main part of the lower compartment. To cover this region, there are pairs of igniters in each of the eight rooms (a total of 16 igniters) through which the recirculation flow passes. The location of the HMS igniters is shown in Figures 6.2.5-8 through 6.2.5-12.

The components of the HMS inside containment are seismically supported.

6.2.5.3 Design Evaluation

Containment pressure during the post blowdown phase of a loss-of-coolant accident is calculated with the LOTIC code which models the containment structural heat sinks and containment safeguards system. The long-term containment pressure analysis accounts for hydrogen partial pressure. This transient is discussed in Section 6.2.1 and 15.4.1.2.

The containment air return system is designed to reduce containment pressure after blowdown to prevent excessive hydrogen concentrations in pocketed areas, and circulate air through the ice condenser. The air return fans automatically start on a Phase B containment isolation signal and can be started manually. The fans provide a continuous mixing of the containment compartment atmosphere for the long-term post–blowdown environment. The system has redundancy, is single-failure-proof and will remain operable with a loss of onsite or offsite power.

The hydrogen analyzer is a highly reliable commerical grade, Category 3 instrument as defined in Regulatory Guide 1.97 and permitted by Regulatory Guide 1.7. The

system is capable of being energized and fully operational within 90 minutes. It is required to operate correctly and continuously following a beyond-design-basis accident.

The HMS, due to its igniter type and locations, redundancy, capability of functioning in a post-accident environment, seismic support, main control room actuation, and remote surviellance, performs its intended function in a manner that provides adequate safety margins. The Unit 2 containment structures can survive the effects of credible degraded core accidents when hydrogen hazards are mitigated by HMS.

6.2.5.4 Testing and Inspections

The combustible gas control system is subjected to periodic testing and inspection to demonstrate its availability.

The periodic test program for the containment air return system and the HMS are described in the Technical Specifications.

The periodic test program for the HAS is described in the Technical Requirements Manual.

Preoperational tests are described in Chapter 14.

6.2.5.5 Instrumentation Application

The instrumentation design details of the air return fans are shown on Figures 9.4-30 and 9.4-33. The logic, controls and instrumentation of this engineered safety feature system are such that a single failure of any component does not result in the loss of functional capability for the system.

The HAS instrument range is configured to measure from 0-10% hydrogen by volume. There are two configurable hydrogen concentration alarms, one on the remote control center and one in the main control room. The HAS also provides a trouble alarm to indicate failures of the sensor and pump. An equipment status display monitors pump pressure and flow.

Annunciation is provided in the main control room upon loss of power or undervoltage to the igniters. Each of the two HMS groups is placed in service from the main control room by a handswitch. The igniters are manually energized following any accident which indicates inadequate core cooling. This is done without waiting for a potential hydrogen buildup.

THIS PAGE INTENTIONALLY BLANK

Figure 6.2.5-1 Deleted by Amendment 95

Figure 6.2.5-2 Deleted By Amendment 62

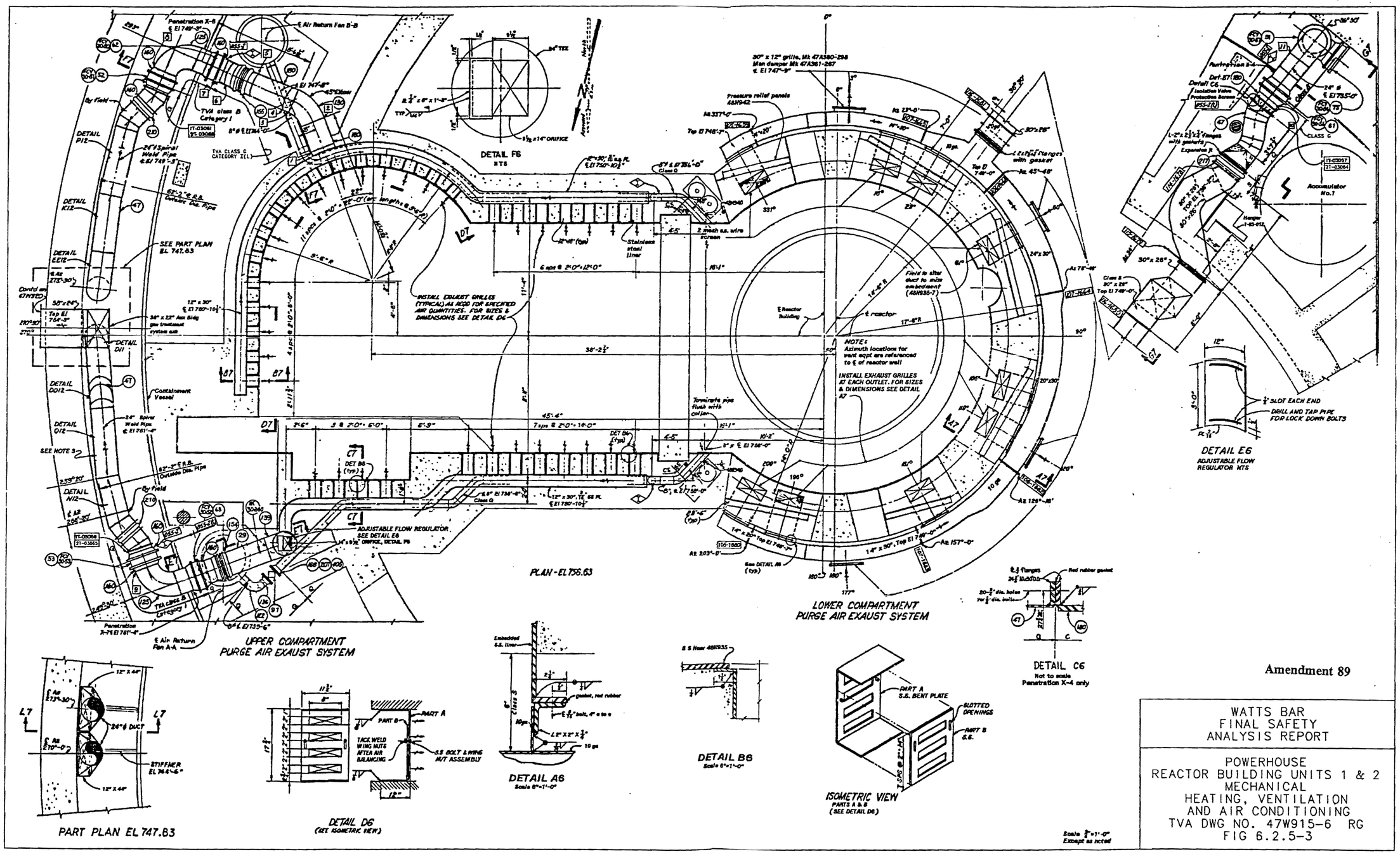

Figure 6.2.5-3 Powerhouse Reactor Building Units 1 & 2 - Mechanical Heating, Ventilating and Air Conditioning

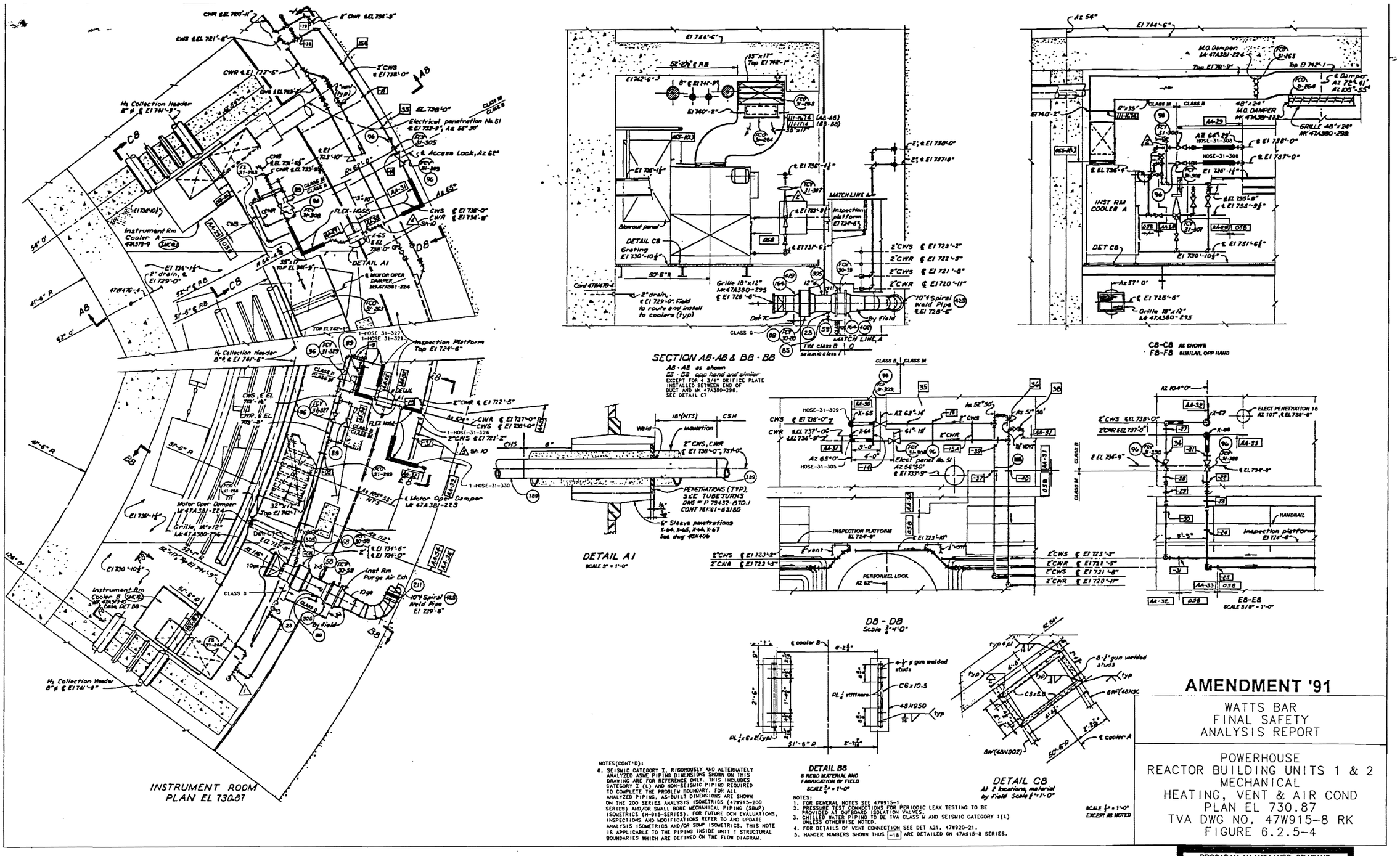

Figure 6.2.5-4 Powerhouse Reactor Building Units 1 & 2 - Mechanical Heating, Ventilating and Air Conditioning

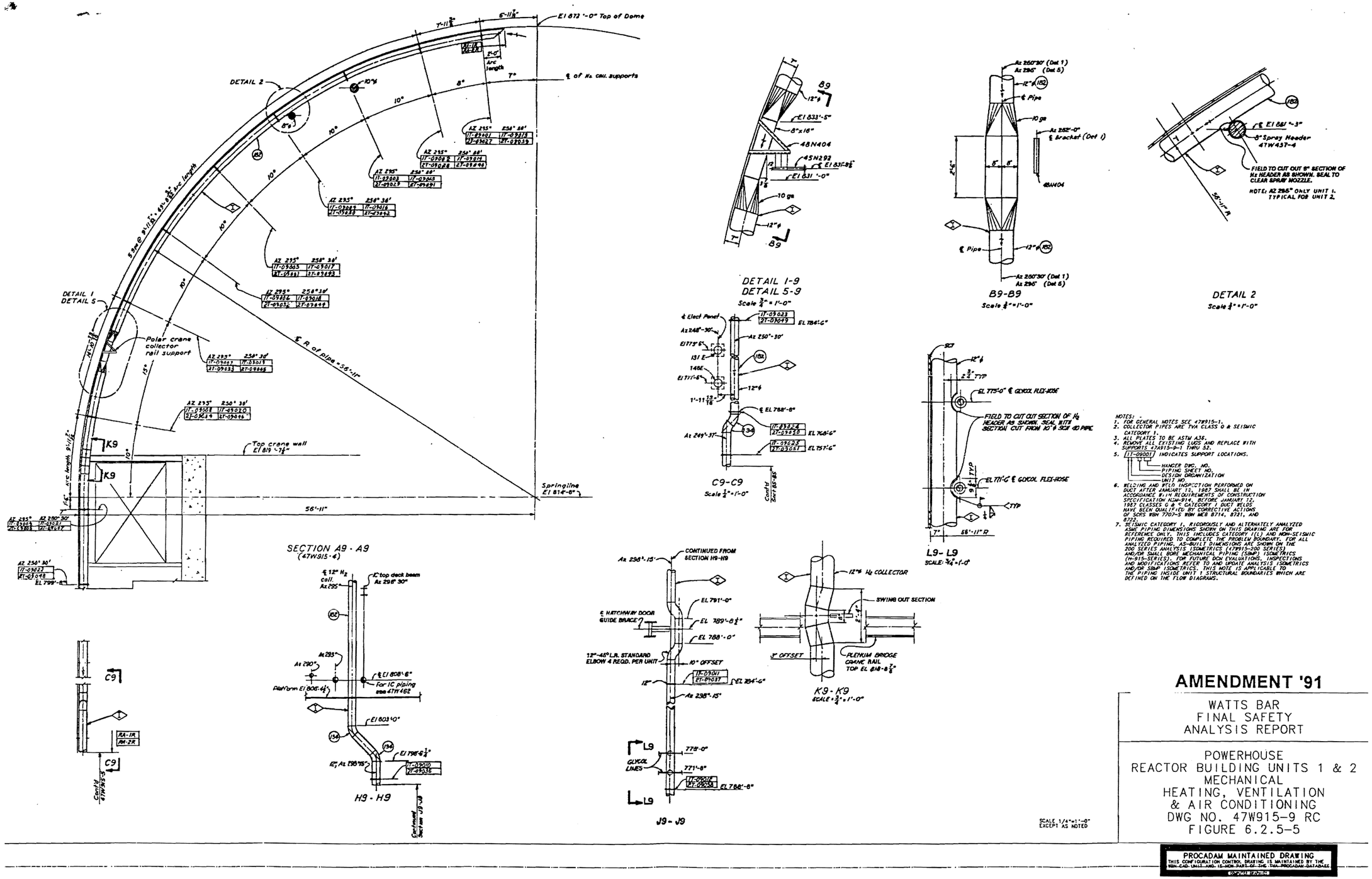

Figure 6.2.5-5 Powerhouse Reactor Building Units 1 & 2 - Mechanical Heating, Ventilation and Air Conditioning

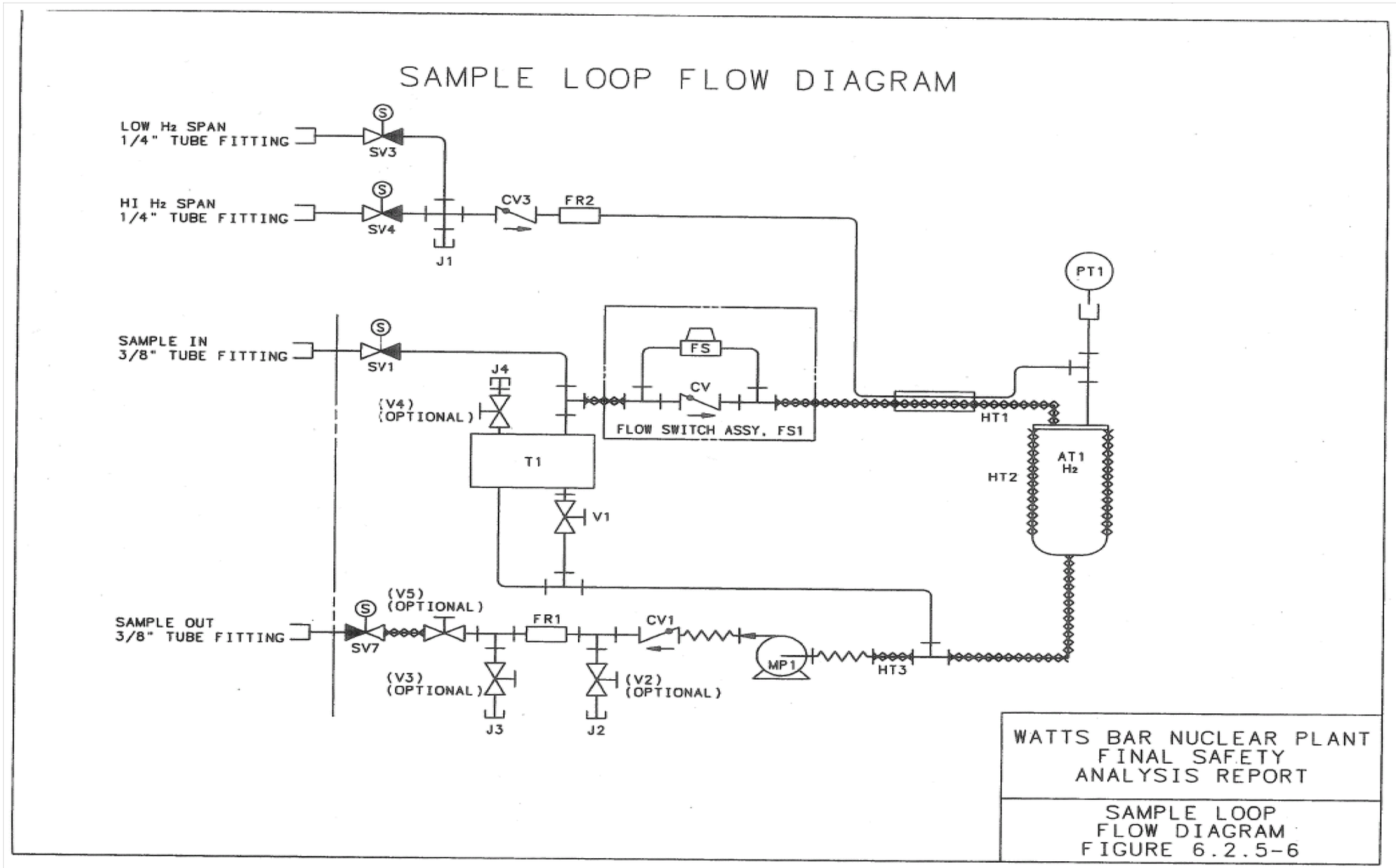

Figure 6.2.5-6 Sample Loop Flow Diagram

Figure 6.2.5-7 Deleted by Amendment 95

Figure 6.2.5-7a Deleted by Amendment 95

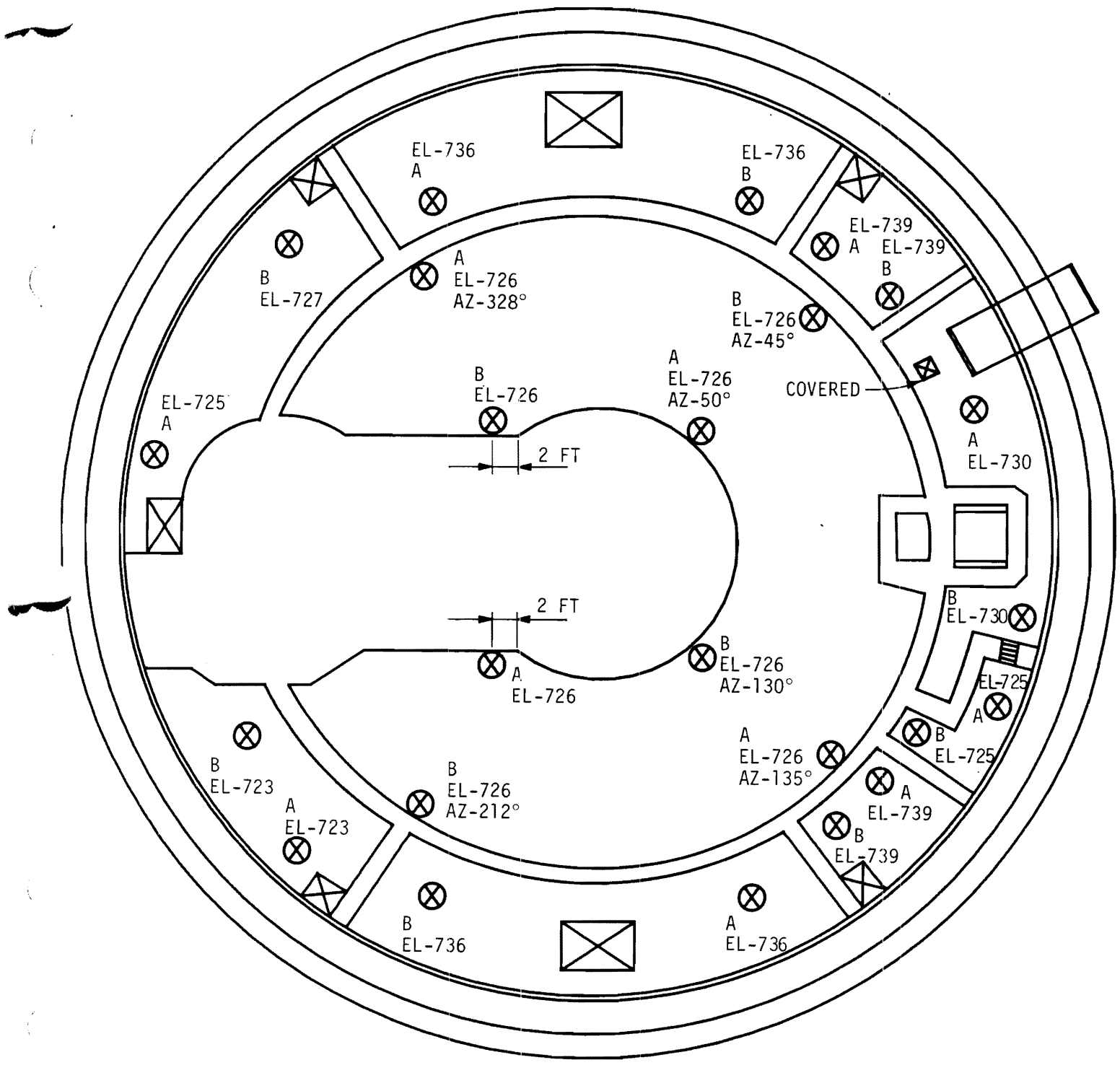

Figure 6.2.5-8 Igniter Locations - Lower Compartment and Dead Ended Compartments

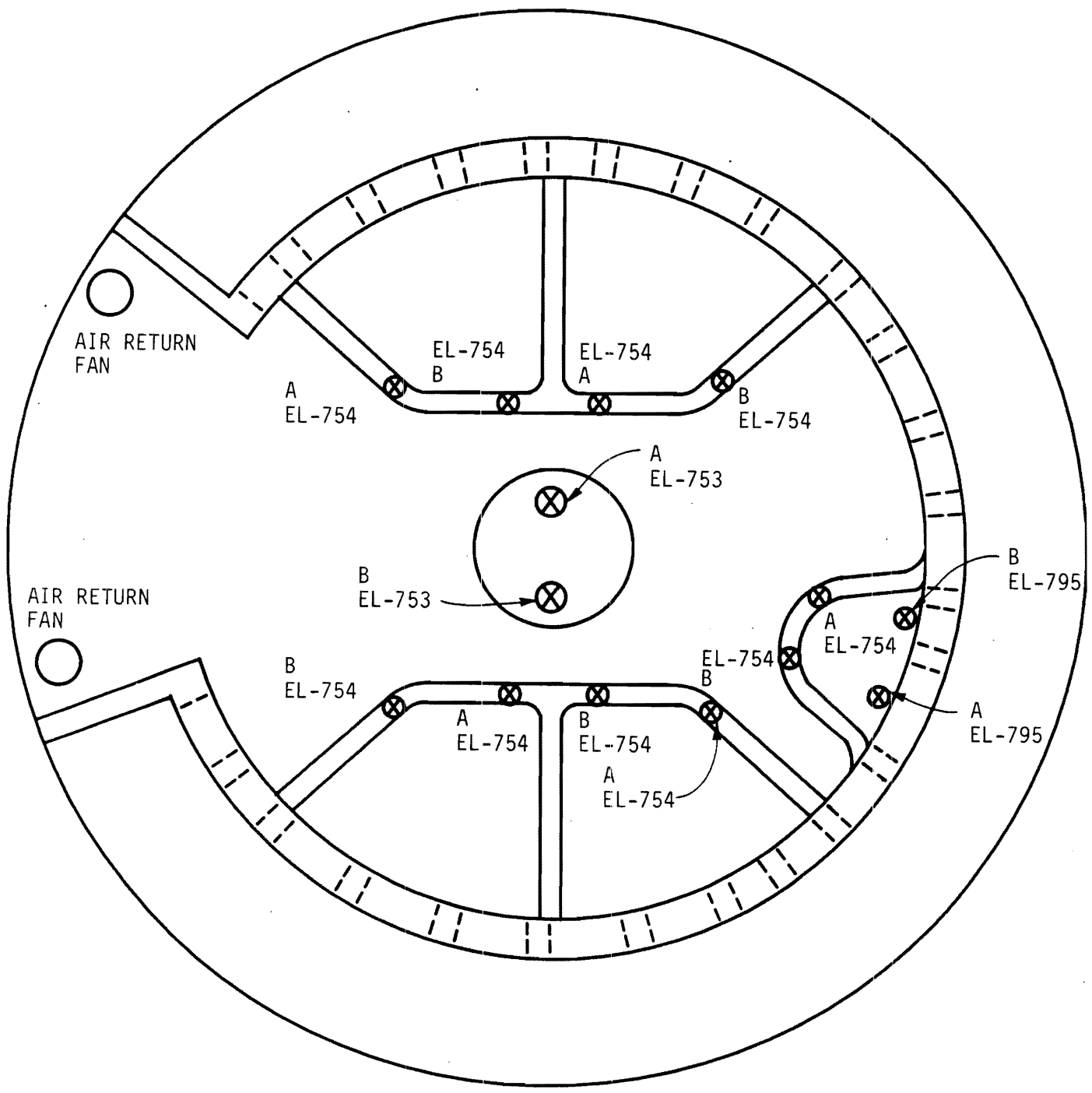

Figure 6.2.5-9 Igniter Locations - Lower Compartments

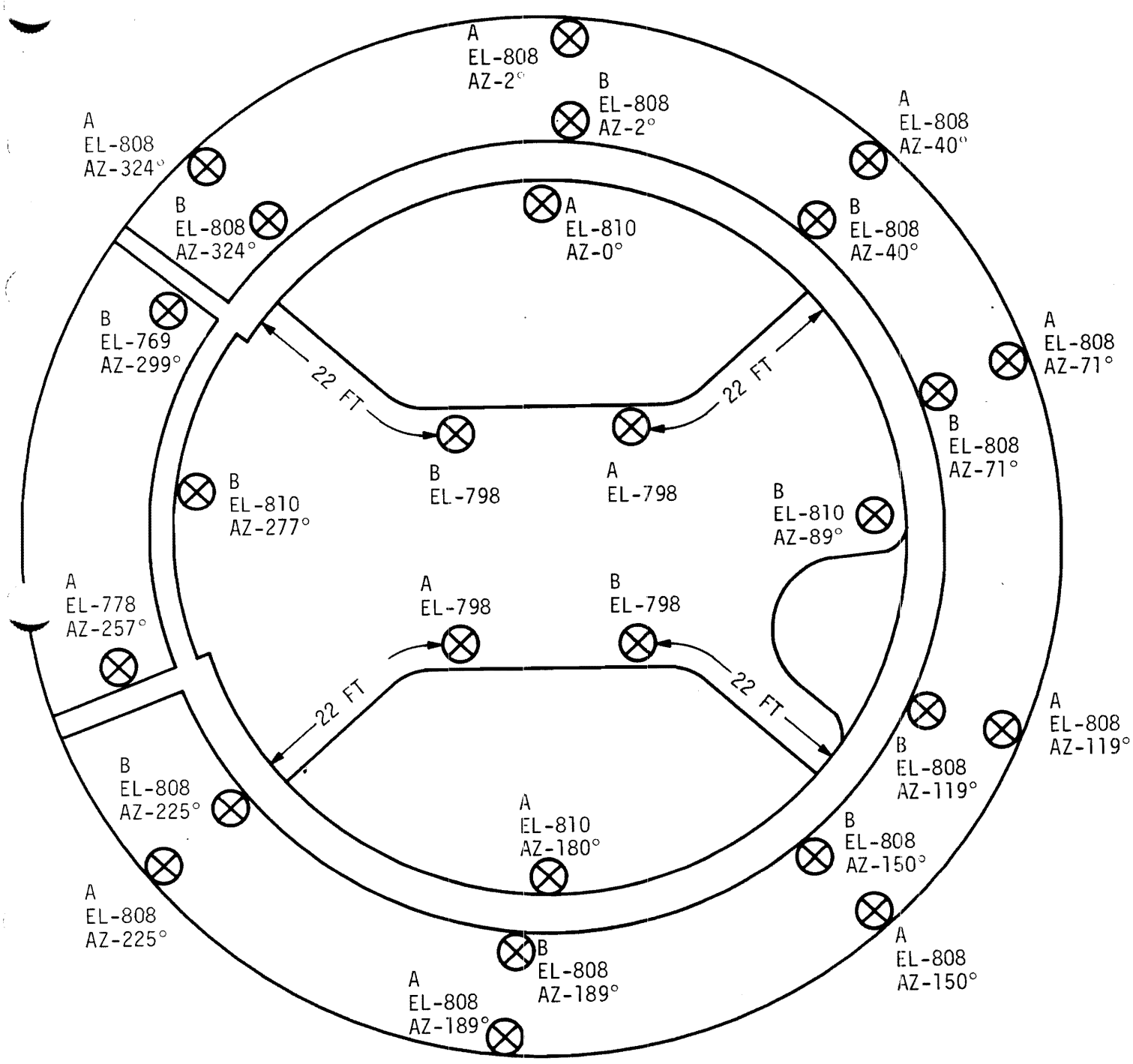

Figure 6.2.5-10 Igniter Locations - Upper Plenum and Upper Compartments

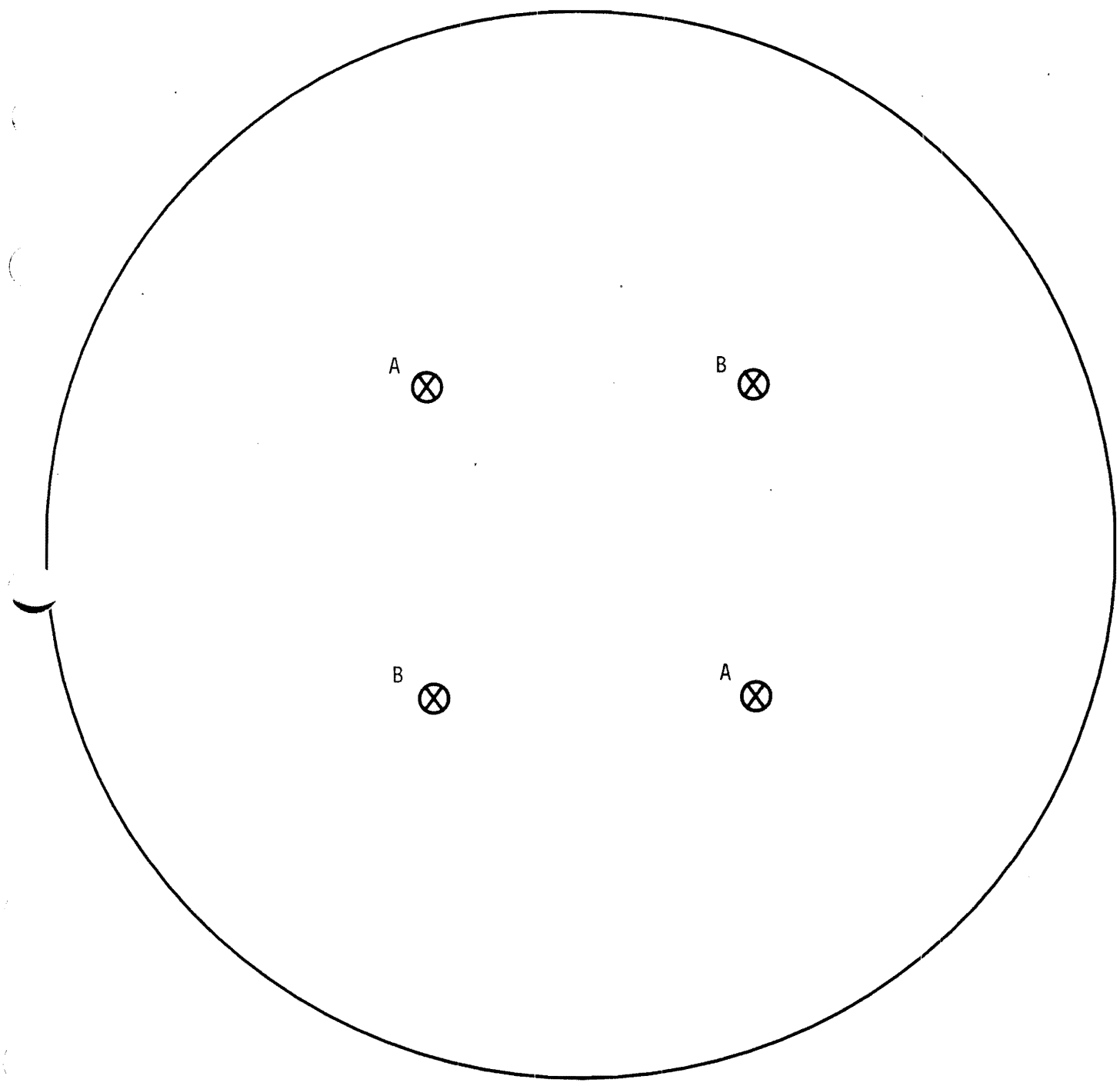

Figure 6.2.5-11 Igniter Locations - Dome

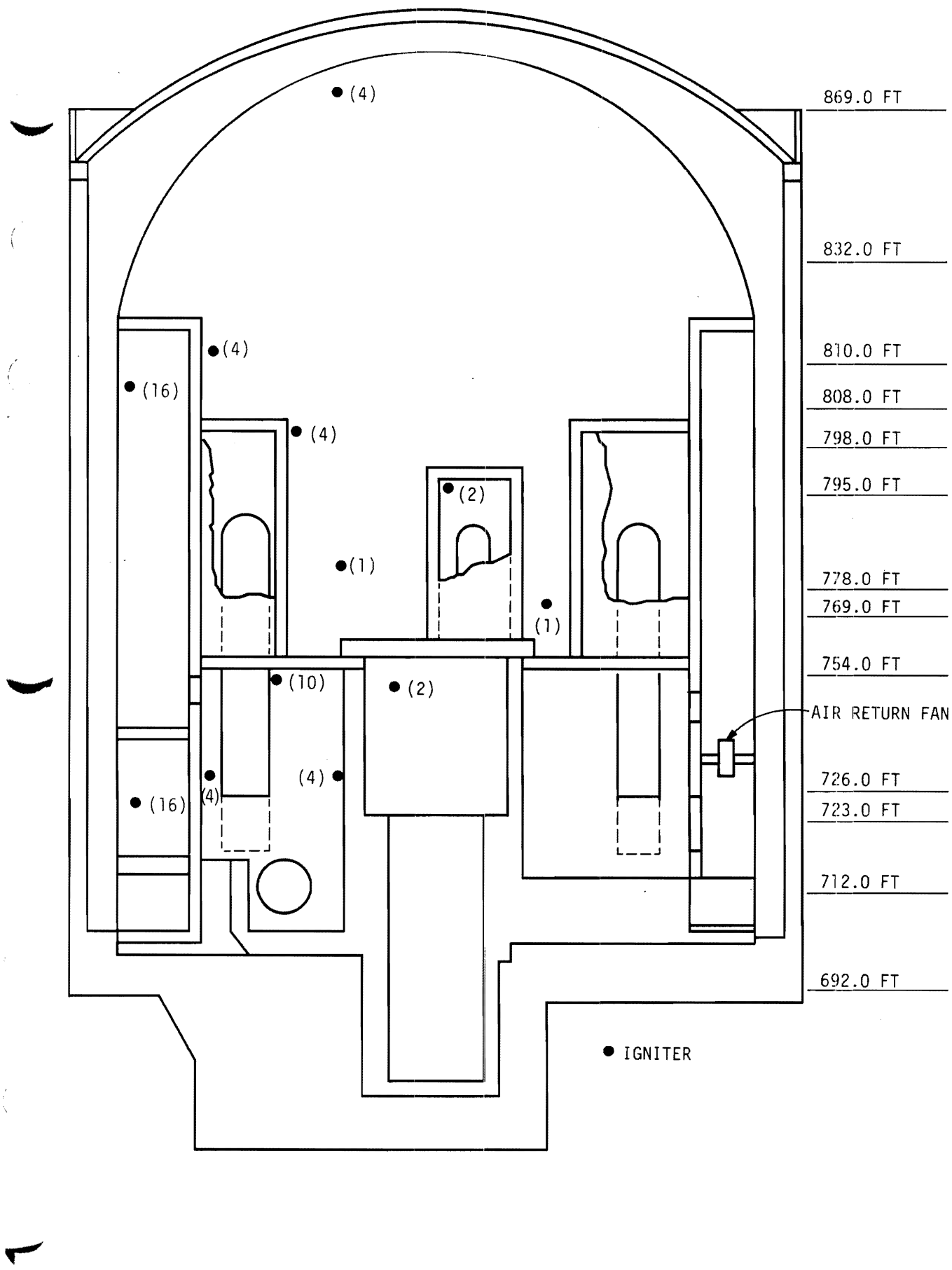

Figure 6.2.5-12 Igniter Locations - Elevation

THIS PAGE INTENTIONALLY BLANK

6.2.6 Containment Leakage Testing

Primary containment leakage tests and containment isolation system valve operability tests will be performed periodically to verify that leakage from the containment is maintained within acceptable limits set forth in the Technical Specifications. The types of leakage tests are as follows:

(1) Test Type A

Tests to measure the reactor primary containment overall integrated leakage rate. The containment leak rate test will be conducted in accordance with 10 CFR 50, Appendix J, Option B.

(2) Test Type B

Tests to detect and measure local leaks of containment penetrations, hatches, and personnel locks as required by 10 CFR 50, Appendix J, Option B.

(3) Test Type C

Test to detect and measure containment isolation valve leakage as described by 10 CFR 50, Appendix J, Option B.

The leakage rate testing pressure for the above tests, P_a (as defined in 10CFR50 Appendix J), has a nominal value of 15.0 psig with allowance for instrument error. Exceptions to this test pressure are noted elsewhere in this section.

6.2.6.1 Containment Integrated Leak Rate Test

The maximum allowable containment leakage rate for the Watts Bar Nuclear Plant is 0.25 weight percent per day as specified in the Technical Specifications. The preoperational testing will be conducted in full compliance with 10 CFR 50, Appendix J as shown in Table 14.2-1. Subsequent periodic testing will also be performed in accordance with Appendix J, Option B with approved exemptions.

Prior to conducting the integrated leak rate test, those lines which penetrate primary containment are aligned as shown in Table 6.2.6-4.

The containment is then pressurized in accordance with 10 CFR 50, Appendix J, and the Technical Specification requirements. When test pressure is reached, the containment is isolated from its pressure source and the following parameters are recorded at periodic intervals:

(1) Containment absolute pressure

(2) Dry bulb temperatures

(3) Water vapor pressures

(4) Outside containment pressure and temperature conditions

During the test, ventilation inside the containment is operated as necessary to enhance an even air temperature distribution. The test data are processed at periodic intervals during the test to determine test status and leakage conditions. If it appears that the leakage is excessive, the pressure plateau is either maintained on the test or aborted to perform repairs. The test is run for a prescribed time period to obtain assurance of the test leak rate.

Following the leak rate test, a second leak rate is performed to verify the information obtained in the first test. This verification test consists of slowly bleeding off pressure from containment at a known rate and measuring the total containment leak rate. The superimposed, measured flow is adjusted to a value which causes a change in the weight of air in the containment that is in the same order of magnitude as the allowable leakage rate.

The mass point equations are used to determine the integrated leak rate. The mass point equations will be used for preoperational testing as discussed in Table 14.2-1.

6.2.6.2 Containment Penetration Leakage Rate Test

Table 6.2.4-1 lists penetrations in the primary containment. The Type B test is performed on all operational electrical equipment and personnel hatch, fuel transfer tube, Incore Instrumentation Thimble Assembly renewal and ice blowing penetrations, and penetration bellows in accordance with 10 CFR 50, Appendix J, Option B. The dual-ply bellows on containment penetration will be tested at P_a by applying the pressure between the plies. Airlock door seals are tested at 6.0 psig per Technical Specification requirements. Experience has shown that pressurizing the space between the seals to greater than 6.5 psig on personnel airlock doors of the design used at Watts Bar will lift the door and induce gross leakage unless strongbacks are used. Since the door seal test is intended to prove integrity of the seals, it is our position that a test conducted at 6.0 psig will conservatively demonstrate that seal integrity is maintained.

Table 6.2.6-1 lists all penetrations subjected to type B testing. Spare electrical penetrations will be subjected to Type B testing as they become operational. Tables 6.2.4-1 through 6.2.4-4 and Figures 8.3-44 and 8.3-45 give details on these penetrations. The test is performed in full compliance with 10 CFR 50, Appendix J, Option B. The acceptance criteria as required by Appendix J,Option B are specified in the Technical Specifications.

Table 6.2.4-1 lists containment isolation valves. Table 6.2.6-2 identifies those valves that are tested during a Type C test.

Isolation valves that are part of closed systems that are in use after a design basis event and valves that are water sealed for at least 30 days after a design basis event are not tested in the Type C test program. Table 6.2.6-3 lists the valves exempted from type C leak testing. Bases for exemptions and exceptions from type C leakage rate testing on a penetration by penetration basis are as follows:

(I) Exemptions

(1) Feedwater Bypass - X-8A, X-8B, X-8C, X-8D

Feedwater - X-12A, X-12B, X-12C, X-12D

Main Steam - X-13A, X-13B, X-13C, X-13D

Steam Generator Blowdown - X-14A, X-14B, X-14C, X-14D

Steam Generator Blowdown sample line - X-27A, X-27B, X-27C, X-27D

Auxiliary Feedwater, X-40A, X-40B

These penetrations are directly connected to the secondary side of the steam generator. The main steam and feedwater lines of PWR containments are not required to be Type C tested (see definition of Type C test in 10 CFR 50, Appendix J). These lines are assumed not to rupture as a result of an accident (missile protected). Any leakage through these lines would be identified during operation by the leakage detection program. In addition, during a design basis accident, the secondary side of the steam generator is filled with water and would be at a higher pressure than the containment atmosphere thus preventing outleakage from containment. The integrity of the inside piping is also verified during the Type A test.

(2) CVCS Normal Charging Line, X-16

This penetration uses an inboard check valve and a closed loop outside containment (CLOC) as the means of containment isolation. Type C testing for this path is not required due to the seal pressure greater than 1.1 P_a and the 30-day water seal inventory as specified in 10 CFR 50, Appendix J. A positive pressure preventing air outleakage is assured by the pressure applied against FCV-62-90 and FCV-62-91 (both of which receive a Phase A signal) by the high head SI pumps. Water testing for piping integrity is performed in accordance with ASME XI.

(3) RHR Hot Leg Injection, X-17

This penetration uses inboard containment isolation valves and a CLOC for containment boundaries. Type C testing for this penetration is not required since a continuous water seal will be provided at a pressure greater than 1.1 P_a and a 30-day water seal is provided, as specified in 10 CFR 50, Appendix J. Testing is performed in accordance with ASME XI.

(4) RHR Pump Discharge, X-20A, X-20B

Same as for X-17.

(5) SIS Pump Discharge to Hot Leg Injection, X-21, X-32

These lines make use of inboard containment isolation valves and a CLOC for containment boundaries. These lines are postulated to be in-service post accident and the high head pumps will maintain a pressure seal greater than 1.1 P_a for greater than 30 days, as specified in 10 CFR 50, Appendix J.

(6) Charging Pump Discharge, X-22

This line makes use of inboard containment isolation valves and a CLOC for containment boundaries. Type C testing is not required for the same reasons as X-21 and X-32. Water seal is provided by the high head pumps.

(7) SIS to Low Head SI, X-33

Same as X-21 and X-32

(8) RCP Seal Injection, X-43A, X-43B, X-43C, X-43D

These lines made use of an inboard containment isolation valve and a CLOC for containment boundaries. Type C test is not required for the same reason as given for X-16.

(II) Exceptions

(1) Sump Suction to RHR, X-19A, X-19B

These lines make use of a containment isolation valve located outside of containment and a CLOC for containment isolation boundaries. During a design basis accident, these lines would be submerged under water which would preclude air outleakage. In addition, these valves are exposed to P_a during each Type A test.

(2) Relief Valve Discharge, X-24

The line uses an inboard containment isolation valve and a CLOC for containment boundaries. The maximum calculated containment accident pressure per 10 CFR 50 Appendix J (P_a) during the design basis accident would not create a substantial outleakage driving force and, in any case, tends to cause the relief valves to seat rather than lift. The systems feeding this line are ECCS and, due either to operating pressure or static head, outleakage would be prevented. Therefore, no Type C testing will be performed for this line. However, this line is exposed to the P_a test pressure during the Type A test.

(3) Containment Spray, X-48A, X-48B and RHR Spray, X-49A, X-49B

These lines make use of an inboard containment isolation check valve and a CLOC for containment boundaries of each line. Additionally, a water leg seal exists against a system valve outside containment in each line. This seal

prevents the outleakage of containment atmosphere. An inventory test is performed to ensure a 30-day seal water inventory at a pressure greater than 1.1 P_a, should one spray system shut down. The seal water inventory leakage rate test is performed in lieu of a Type C air leakage rate test of the containment isolation check valves.

(4) RHR Supply to Pumps, X-107

This line makes use of inboard containment isolation valves and a CLOC for containment boundaries. This penetration satisfies ANSI-N271-1976. In addition, an ASME Section XI water leakage test is performed to verify system integrity. Thus, no Type C test is required for this line.

Test connections and pressurizing means are provided to test isolation valves or barriers for leaktightness. Either air, nitrogen or water is used as the pressurizing medium, depending on the physical location and service of each line. Leak testing of individual valves and penetrations is accomplished by one of the following methods:

(1) Method 1, Pressure Decay

The test volume initially shall be pressurized with air or nitrogen to a test pressure greater than the pressure under accident conditions, P_{ac}. The final test pressure shall be greater than P_{ac}. The pressure and temperature shall be recorded at the start and end of the test. The leakage rate shall be calculated from the following formula:

$$L_i = \frac{TV}{t}\left[\frac{P_1}{T_1} - \frac{P_2}{T_2}\right]\frac{T_{stp}}{P_{stp}}$$

Where:

L_i = Local leak rate, cfm

TV = Test volume, ft^3

P_1 = Initial pressure, psia

P_2 = Final pressure, psia

T_1 = Initial temperature, °R

T_2 = Final temperature, °R

T_{stp} = Standard atmospheric temperature, °R

P_{stp} = Standard atmospheric pressure, psia

t = Test duration, min.

(2) Method 2, - Makeup Flow Rate

The test volume shall be pressured and maintained to at least 15 psig using a pressure regulator to maintain test pressure. Makeup fluid flow to the test volume required to maintain test pressure shall be used as the leakage rate of the barrier under test.

The acceptance criteria for the Type C test are given in the Technical Specification which complies with Appendix J to 10 CFR 50, Option B.

6.2.6.3 Scheduling and Reporting of Periodic Tests

Type A integrated containment leakage tests are performed prior to operation of the plant and subsequently in accordance with the Containment Leakage Rate Testing Program

Type B and Type C leakage rate tests are performed in accordance with the Containment Leakage Rate Testing Program.

Test reports are made in accordance with 10 CFR 50 Appendix J, Option B.

References

None

Table 6.2.6-1 Penetrations Subjected To Type B Testing (Page 1 of 3)

Penetration	Description
X-121E	RCP No. 1 - Non-Div.
X-122E	RCP No. 2 - Non-Div.
X-123E	RCP No. 3 - Non-Div.
X-124E	RCP No. 4 - Non-Div.
X-125E	480V Power - Non-Div.
X-126E	480V Power A
X-127E	480V Power B
X-128E	480V Power A
X-129E	480V Power B
X-130E	Control - Non-Div.
X-131E	480V Power - Non-Div.
X-132E	Control Rod Drive Power
X-133E	Control Rod Drive Power
X-134E	480V Power A
X-135E	480V Power A
X-136E	480V Power B
X-137E	480V Power B
X-138E	Low Level - Non-Div.
X-139E	Process Instr. Protection
X-140E	Incore Instrumentation
X-141E	480V Power A
X-142E	Incore Instrumentation
X-143E	NIS Channel III
X-144E	480V Power - Non-Div.
X-145E	Control Rod Pos. Detection
X-146E	Control Rod Drive Power
X-147E	Control A
X-148E	Process Inst. Control
X-149E	Low Level - Non-Div.
X-150E	Annunciation and Communication
X-151E	NIS Channel IV
X-152E	480V Power - Non-Div.
X-153E	Low Level - Non-Div.
X-154E	Process Inst. Control
X-155E	480V Power - Non-Div.
X-156E	Control B
X-157E	Annunciation
X-158E	Process Inst. Protection
X-159E	Process Inst. Control

Table 6.2.6-1 Penetrations Subjected To Type B Testing (Page 2 of 3)

Penetration	Description
X-160E	Annunciation and Communication
X-161E	480V Power - Non-Div.
X-163E	NIS Channel I
X-164E	Control A
X-165E	Process Inst. Protection
X-166E	Control - Non-Div.
X-167E	480V Power - Non-Div.
X-168E	Control - Non-Div.
X-169E	Process Inst. Protection
X-170E	Process Inst. Control
X-171E	Control - Non-Div.
X-172E	Control B
X-173E	Control - Non-Div.
X-174E	NIS Channel II
X-1	* (Resilient Seal)
X-2A	* (Resilient Seal)
X-2B	* (Resilient Seal)
X-3	* (Resilient Seal)
X-54	* (Resilient Seal)
X-79A	* (Resilient Seal)
X-13A	* (Bellows)
X-13B	* (Bellows)
X-13C	* (Bellows)
X-13D	* (Bellows)
X-12A	* (Bellows)
X-12B	* (Bellows)
X-12C	* (Bellows)
X-12D	* (Bellows)
X-17	* (Bellows)
X-107	* (Bellows)
X-14A	* (Bellows)
X-14B	* (Bellows)
X-14C	* (Bellows)
X-14D	* (Bellows)
X-15	* (Bellows)
X-20A	* (Bellows)
X-20B	* (Bellows)
X-21	* (Bellows)
X-22	* (Bellows)
X-24	* (Bellows)
X-40D	* (Resilient Seal)
X-79B	* (Resilient Seal)
X-8A	* (Bellows)
X-8B	* (Bellows)
X-8C	* (Bellows)
X-8D	* (Bellows)
X-30	* (Bellows)
X-32	* (Bellows)
X-33	* (Bellows)

Table 6.2.6-1 Penetrations Subjected To Type B Testing
(Page 3 of 3)

Penetration	Description
X-45	* (Bellows)
X-46	* (Bellows)
X-47A	* (Bellows)
X-47B	* (Bellows)
X-81	* (Bellows)
X-108	* (Resilient Seal)
X-108	* (Bellows)
X-109	* (Resilient Seal)
X-109	* (Bellows)
X-36	* (Resilient Seal)
X-37	* (Resilient Seal)
X-117	* (Resilient Seal)
X-118	* (Resilient Seal)

* See Table 6.2.4-1 for Description.

Table 6.2.6-2 Containment Isolation Valves Subjected to Type C Testing (Page 1 of 6)

Penetration No.	Isolation Valve No.	Description
X-4	30-56(1) 30-57	(2)
X-5	30-58(1) 30-59	(2)
X-6	30-50(1) 30-51	(2)
X-7	30-52(1) 30-53	(2)
X-9A	30-7 30-8(1)	(2)
X-9B	30-9 30-10(1)	(2)
X-10A	30-14 30-15(1)	(2)
X-10B	30-16 30-17(1)	(2)
X-11	30-19 30-20(1)	(2)
X-15	62-72 62-73 62-74 62-76 62-77 62-662(1)	(2)
X-23	43-318 43-319	(2)
X-25A	43-11 43-12	(2)
X-25D	43-2 43-3	(2)
X-26B	52-500 52-504	(2)
X-26A	52-501 52-505	(2)
X-28	43-341 43-834	(2)
X-29	70-89 70-92 70-698	(2)

Table 6.2.6-2 Containment Isolation Valves Subjected to Type C Testing (Page 2 of 6)

Penetration No.	Isolation Valve No.	Description
X-30	63-71 63-84 63-23 63-28	(2)
X-31	26-243 26-1296	(2)
X-34	32-111 32-338 32-343	(2)
X-35	70-85 70-703(1)	(2)
X-39A	63-64 77-868	(2)
X-39B	68-305 77-849	(2)
X-41	77-127 77-128 77-2874	(2)
X-42	81-12 81-502	(2)
X-44	62-61 62-63 62-639	(2)
X-45	77-18 77-19 77-20	(2)
X-46	77-9 77-10 84-530	(2)
X-47A	61-191 61-192 61-533 (Unit 1) 61-788 (Unit 2)	(2)
X-47B	61-193 61-194 61-680 (Unit 1) 61-935 (Unit 2)	(2)
X-50A	70-87 70-90 70-687	(2)

Table 6.2.6-2 Containment Isolation Valves Subjected to Type C Testing (Page 3 of 6)

Penetration No.	Isolation Valve No.	Description
X-50B	70-679 70-134	(2)
X-52	70-140 1-70-100 1-70-790	(2)
X-53	70-143	(2)
X-56A	67-107 1-67-113 1-67-1054D	(2)
X-57A	67-111 67-112 67-575D	(2)
X-58A	67-83 67-89 67-1054A	(2)
X-59A	67-87 67-88 67-575A	(2)
X-60A	67-99 67-105 67-1054B	(2)
X-61A	67-103 67-104 67-575B	(2)
X-62A	67-91 67-97 67-1054C	(2)
X-63A	67-95 67-96 67-575C	(2)
X-64	31-305 31-306 31-3421	(2)
X-65	31-309 31-308 31-3407	(2)
X-66	31-326 31-327 31-3392	(2)

Table 6.2.6-2 Containment Isolation Valves Subjected to Type C Testing (Page 4 of 6)

Penetration No.	Isolation Valve No.	Description
X-67	31-330 31-329 31-3378	(2)
X-68	67-141 67-580D	(2)
X-69	67-130 67-580A	(2)
X-70	67-139 67-297 67-585B	(2)
X-71	67-134 67-296 67-585C	(2)
X-72	67-142 67-298 67-585D	(2)
X-73	67-131 67-295 67-585A	(2)
X-74	67-138 67-580B	(2)
X-75	67-133 67-580C	(2)
X-76	33-713 (Unit 1) 33-714 (Unit 1) 33-732 (Unit 2) 33-733 (Unit 2)	(2)
X-77	59-522 59-698	(2)
X-78	26-240 26-1260	(2)
X-80	30-37 30-40	(2)
X-81	77-16 77-17	(2)
X-82	78-560 78-561	(2)
X-83	78-557 78-558	(2)

Table 6.2.6-2 Containment Isolation Valves Subjected to Type C Testing (Page 5 of 6)

Penetration No.	Isolation Valve No.	Description
X-84A	68-307 68-308	(2)
X-85A	43-75 43-77	(2)
X-85B	43-22 43-23	(2)
X-86A	43-288 43-287	(2)
X-86B	43-883 43-307	(2)
X-86C	43-342 43-841	(2)
X-90	32-103 32-318 32-323	(2)
X-91	32-81 32-328 32-333	(2)
X-92A	43-207 43-435	(2)
X-92B	43-208 43-436	(2)
X-92C	43-250 43-251	(2)
X-93	43-34 43-35	(2)
X-94B	90-110 90-111	(2)
X-94C	90-107 90-108 90-109	(2)
X-95B	90-116 90-117	(2)
X-95C	90-113 90-114 90-115	(2)
X-96A	52-506 52-502	(2)

Table 6.2.6-2 Containment Isolation Valves Subjected to Type C Testing (Page 6 of 6)

Penetration No.	Isolation Valve No.	Description
X-96B	52-507 52-503	(2)
X-99	43-202 43-434	(2)
X-100	43-201 43-433	(2)
X-114	61-110 61-122 61-745	(2)
X-115	61-96 61-97 61-692	(2)

Notes:

(1) These isolation valves are leakage rate tested in the reverse direction. This is acceptable since the results are equivalent or more conservative.

(2) See Table 6.2.4-1 for Description.

Table 6.2.6-3 Valves Exempted From Type C Leak Testing (Page 1 of 4)

Penetration No.	Valve No.	System	Justification
X-8A	FCV 3-236	Note 12	Note 1
	LCV 3-164		Note 1
	LCV 3-174		Note 1
	FCV 3-164A		Note 1
X-8B	FCV 3-239	Note 12	Note 1
X-8C	FCV 3-242	Note 12	Note 1
X-8D	FCV 3-245	Note 12	Note 1
	LCV 3-171		Note 1
	LCV 3-175		Note 1
	FCV 3-171A		Note 1
X-12A	FCV 3-33	Note 12	Note 1
	ISV 41-586		Note 1
X-12B	FCV 3-47	Note 12	Note 1
	ISV 41-589		Note 1
X-12C	FCV 3-87	Note 12	Note 1
	ISV 41-592		Note 1
X-12D	FCV 3-100	Note 12	Note 1
	ISV 41-595		Note 1
X-13A	FCV 1-4	Note 12	Note 1
	FCV 1-147		Note 1
	FCV 1-15		Note 1
	DRV 1-536		Note 1
	PCV 1-5		Note 1
	SFV 1-522		Note 1
	SFV 1-523		Note 1
	SFV 1-524		Note 1
	SFV 1-525		Note 1
	SFV 1-526		Note 1
X-13B	FCV 1-11	Note 12	Note 1
	FCV 1-148		Note 1
	PCV 1-12		Note 1
	DRV 1-534		Note 1
	SFV 1-517		Note 1
	SFV 1-518		Note 1
	SFV 1-519		Note 1
	SFV 1-520		Note 1
	SFV 1-521		Note 1

Table 6.2.6-3 Valves Exempted From Type C Leak Testing (Page 2 of 4)

Penetration No.	Valve No.	System	Justification
X-13C	FCV 1-22	Note 12	Note 1
	FCV 1-23		Note 1
	FCV 1-149		Note 1
	DRV 1-532		Note 1
	SFV 1-512		Note 1
	SFV 1-513		Note 1
	SFV 1-514		Note 1
	SFV 1-515		Note 1
	SFV 1-516		Note 1
X-13D	FCV 1-29	Note 12	Note 1
	FCV 1-150		Note 1
	PCV 1-30		Note 1
	DRV 1-538		Note 1
	FCV 1-16		Note 1
	SFV 1-527		Note 1
	SFV 1-528		Note 1
	SFV 1-529		Note 1
	FCV 1-530		Note 1
	SFV 1-531		Note 1
X-14A	FCV 1-14	Note 12	Note 1
X-14B	FCV 1-32	Note 12	Note 1
X-14C	FCV 1-25	Note 12	Note 1
X-14D	FCV 1-7	Note 12	Note 1
X-16	62-543*	Note 12	Note 3
X-17	63-640*	Note 12	Note 2
	63-643*		Note 2
	FCV 63-158		Note 2
X-19A	FCV 63-072	Note 12	Note 5
	FCV 72-044		Note 5
X-19B	FCV 63-073	Note 12	Note 5
	FCV 72-045		Note 5
X-20A	FCV 63-112	Note 12	Note 2
	63-633*		Note 2
	63-635*		Note 2
X-20B	FCV 63-111	Note 12	Note 2
	63-632*		Note 2
	63-634*		Note 2
X-21	FCV 63-167	Note 12	Note 6
	63-547*		Note 6
	63-549*		Note 6

Table 6.2.6-3 Valves Exempted From Type C Leak Testing (Page 3 of 4)

Penetration No.	Valve No.	System	Justification
X-22	FCV 63-174 63-581*	Note 12	Note 7 Note 7
X-24	68-559*	Note 12 Note 12 Note 12	Note 8
X-26C	30-43B/1 30-43B/2 30-310B/1 30-310B/2		Note 11
X-27A	FCV 43-55	Note 12	Note 1
X-27B	FCV 43-58	Note 12	Note 1
X-27C	FCV 43-61	Note 12	Note 1
X-27D	FCV 43-64	Note 12	Note 1
X-32	FCV 63-21 63-543* 63-545*	Note 12	Note 6 Note 6 Note 6
X-57B	30-44B/1 30-44B/2 30-311B/1 30-311B/2	Note 12	Note 11
X-60B	30-42B/1 30-42B/2	Note 12	Note 11
X-102	30-45B/1 30-45B/2	Note 12	Note 11

Table 6.2.6-3 Valves Exempted From Type C Leak Testing (Page 4 of 4)

Penetration No.	Valve No.	System	Justification
X-33	FCV 63-121	Note 12	Note 6
	63-551		Note 6
	63-553		Note 6
	63-555		Note 6
	63-557		Note 6
X-40A	LCV 3-156	Note 12	Note 1
	LCV 3-173		Note 1
	LCV 3-156A		Note 1
X-40B	LCV 3-148	Note 12	Note 1
	LCV 3-172		Note 1
	LXC 3-148A		Note 1
X-43A	62-562*	Note 12	Note 9
X-43B	62-561*	Note 12	Note 9
X-43C	62-563*	Note 12	Note 9
X-43D	62-560*	Note 12	Note 9
X-48A	72-548*	Note 12	Note 10
X-48B	72-549*	Note 12	Note 10
X-49A	72-562*	Note 12	Note 10
X-49B	72-563*	Note 12	Note 10
X-97	30-133B/1	Note 12	Note 11
	30-133B/2		
x-98	30-30CB/1	Note 12	Note 11
	30-30CB/2		
X-107	FCV 74-2	Note 12	Note 4
	FCV 74-8		Note 4
	RFV 74-505		Note 4
	FCV 63-185		Note 4

*Check Valve

Table 6.2.6-3 Valves Exempted From Type C Leak Testing

Note 1. This penetration is directly connected to the secondary side of the steam generator. The main steam, feedwater, and steam generator blowdown lines of PWR containments are not required to be tested (see definition of Type C test in 10 CFR 50, Appendix J). These lines are assumed not to rupture as a result of an accident (missile Protected). Any leakage through these lines would be identified during operation by the leakage detection program. In addition, during a design basis accident, the secondary side would be at a higher pressure than the containment atmosphere, thus preventing outleakage from containment. The integrity of the inside piping is also verified during the Type A test.

Note 2. This penetration uses inboard containment isolation valves and a CLOC for containment boundaries. Type C testing for this penetration is not required since a continuous water seal will be provided at a pressure greater than 1.1 P_a and a guaranteed 30-day water inventory. Testing will be performed in accordance with ASME XI.

Note 3. This penetration uses an inboard check valve and a closed loop outside containment (CLOC) as the means of containment isolation. Type C testing for this path is not required due to the presence of a 1.1 P_a pressure and a 30-day inventory criteria as specified in 10 CFR 50, Appendix J. A positive pressure preventing air outleakage is assured by the pressure applied against FCV-62-90 and FCV-62-91 (both of which receive a phase A signal) by the high-head SI pumps. Water testing for piping integrity is performed in accordance with ASME XI.

Note 4. This line makes use of inboard containment isolation valves an a CLOC for containment boundaries. This penetration satisfies ANSI-N271-1976. In addition, an ASME Section XI water leakage test will be performed to verify system integrity.

Note 5. This line makes use of a containment isolation valve located outside of containment and a CLOC for containment isolation boundaries. During a design basis accident, this line would be submerged under water which would preclude air outleakage. In addition, these valves are exposed to P_a during each Type A test.

Note 6. This line makes use of inboard containment isolation valves and a CLOC for containment boundaries. These lines are postulated to be inservice post-accident and when not in use, the pumps maintain a pressure seal greater than 1.1 P_a.

Table 6.2.6-3 Valves Exempted From Type C Leak Testing

Note 7. This line makes use of inboard containment isolation valves and a CLOC for containment boundaries. Type C testing is not required for the same reasons as X-21 and X-32 as stated in Note 6. Water seal is provided by the high-head pumps.

Note 8. This line uses an inboard containment isolation valve and a CLOC for containment boundaries. P_a during the design basis accident would not create a substantial outleakage driving force and, in any case, tend to cause the relief valves in the CLOC to seat rather than lift. The systems feeding this line are ECCS and, due either to operating pressure or static head outleakage would be prevented. This line is exposed to the P_a test pressure during the Type A test.

Note 9. This line makes use of an inboard containment isolation valve and a CLOC for containment boundaries. Type C testing is not required for the same reason as given for X-16 in Note 3.

Note 10. This line makes use of an inboard containment isolation valve and a CLOC for containment boundaries. An inventory test is performed to ensure a 30-day inventory at a pressure greater than 1.1 P_a exists, should one spray system shut down. This will prevent outleakage of containment atmosphere.

Note 11. This instrument line has a CLOC for containment boundary. This design is required as discussed in Section 6.2.4. This instrument is tested at P_a during the Type A test.

Note 12. See Table 6.2.4-1 for System information.

Table 6.2.6-4 Containment Vessel Pressure And Leak Test Reactor Building Containment Penetration Status (Page 1 of 7)

Penetration	Description	Status
A. PENETRATION STATUS DURING TEST PERFORMANCE		
X-1	(see Note 4.)	Closed
X-2A	(see Note 4.)	Closed
X-2B	(see Note 4.)	Closed
X-3	(see Note 4.)	Closed
X-4	(see Note 4.)	Vented
X-5	(see Note 4.)	Vented
X-6	(see Note 4.)	Vented
X-7	(see Note 4.)	Vented
X-8	(see Note 4.)	Vented (see Note 1)
X-8A	(see Note 4.)	Normal Lineup
X-8B	(see Note 4.)	Normal Lineup
X-8C	(see Note 4.)	Normal Lineup
X-8D	(see Note 4.)	Normal Lineup
X-9A	(see Note 4.)	Vented
X-9B	(see Note 4.)	Vented
X-10A	(see Note 4.)	Vented
X-10B	(see Note 4.)	Vented
X-11	(see Note 4.)	Vented
X-12A	(see Note 4.)	Normal Lineup
X-12B	(see Note 4.)	Normal Lineup
X-12C	(see Note 4.)	Normal Lineup
X-12D	(see Note 4.)	Normal Lineup
X-13A	(see Note 4.)	Normal Lineup
X-13B	(see Note 4.)	Normal Lineup
X-13C	(see Note 4.)	Normal Lineup
X-13D	(see Note 4.)	Normal Lineup
X-14A	(see Note 4.)	Normal Lineup
X-14B	(see Note 4.)	Normal Lineup
X-14C	(see Note 4.)	Normal Lineup
X-14D	(see Note 4.)	Normal Lineup
X-15	(see Note 4.)	See Note 3
X-16	(see Note 4.)	Normal Lineup
X-17	(see Note 4.)	Normal Lineup
X-18	(see Note 4.)	Vented (see Note 1)
X-19A	(see Note 4.)	Normal Lineup
X-19B	(see Note 4.)	Normal Lineup
X-20A	(see Note 4.)	Normal Lineup

Table 6.2.6-4 Containment Vessel Pressure And Leak Test Reactor Building Containment Penetration Status (Page 2 of 7)

Penetration	Description	Status
X-20B	(see Note 4.)	Normal Lineup
X-21	(see Note 4.)	Normal Lineup
X-22	(see Note 4.)	Normal Lineup
X-24	(see Note 4.)	Normal Lineup
X-25A	(see Note 4.)	See Note 3
X-25B	(see Note 4.)	Vented
X-25C	(see Note 4.)	Vented (See Note 1)
X-25D	(see Note 4.)	See Note 3
X-26A	(see Note 4.)	In Use (see Note 2)
X-26B	(see Note 4.)	In Use (see Note 2)
X-26C	(see Note 4.)	Vented
X-27A	(see Note 4.)	Normal Lineup
X-27B	(see Note 4.)	Normal Lineup
X-27C	(see Note 4.)	Normal Lineup
X-27D	(see Note 4.)	Normal Lineup
X-29	(see Note 4.)	See Note 3
X-30	(see Note 4.)	See Note 3
X-31	(see Note 4.)	See Note 3
X-32	(see Note 4.)	Normal Lineup
X-33	(see Note 4.)	Normal Lineup
X-34	(see Note 4.)	Vented
X-35	(see Note 4.)	See Note 3
X-36	(see Note 4.)	Vented (see Note 1)
X-37	(see Note 4.)	Vented (see Note 1)
X-38	(see Note 4.)	Vented (see Note 1)
X-39A	(see Note 4.)	Vented
X-39B	(see Note 4.)	Vented
X-39C	(see Note 4.)	Vented (see Note 1)
X-39D	(see Note 4.)	Vented (see Note 1)
X-40A	(see Note 4.)	Normal Lineup
X-40B	(see Note 4.)	Normal Lineup
X-40C	(see Note 4.)	Vented (see Note 1)
X-40D	(see Note 4.)	Vented
X-41	(see Note 4.)	See Note 3
X-42	(see Note 4.)	See Note 3
X-43A	(see Note 4.)	Normal Lineup
X-43B	(see Note 4.)	Normal Lineup
X-43C	(see Note 4.)	Normal Lineup
X-43D	(see Note 4.)	Normal Lineup
X-44	(see Note 4.)	See Note 3
X-45	(see Note 4.)	Vented
X-46	(see Note 4.)	See Note 3

Table 6.2.6-4 Containment Vessel Pressure And Leak Test Reactor Building Containment Penetration Status (Page 3 of 7)

Penetration	Description	Status
X-47A	(see Note 4.)	In Use
X-47B	(see Note 4.)	In Use
X-48A	(see Note 4.)	Normal Lineup
X-48B	(see Note 4.)	Normal Lineup
X-49A	(see Note 4.)	Normal Lineup
X-49B	(see Note 4.)	Normal Lineup
X-50A	(see Note 4.)	See Note 3
X-50B	(see Note 4.)	See Note 3
X-51	(see Note 4.)	Vented (see Note 1)
X-52	(see Note 4.)	See Note 3
X-53	(see Note 4.)	See Note 3
X-54	(see Note 4.)	In Use
X-55	(see Note 4.)	Vented (see Note 1)
X-56A	(see Note 4.)	See Note 3
X-56B	(see Note 4.)	Vented (see Note 1)
X-57A	(see Note 4.)	See Note 3
X-57B	(see Note 4.)	Vented
X-58A	(see Note 4.)	See Note 3
X-58B	(see Note 4.)	Normal Lineup
X-59A	(see Note 4.)	See Note 3
X-59B	(see Note 4.)	Vented (see Note 1)
X-60A	(see Note 4.)	See Note 3
X-60B	(see Note 4.)	Vented
X-61A	(see Note 4.)	See Note 3
X-61B	(see Note 4.)	Vented (see Note 1)
X-62A	(see Note 4.)	See Note 3
X-62B	(see Note 4.)	Vented (see Note 1)
X-63A	(see Note 4.)	See Note 3
X-63B	(see Note 4.)	Vented (see Note 1)
X-64	(see Note 4.)	See Note 3
X-65	(see Note 4.)	See Note 3
X-66	(see Note 4.)	See Note 3
X-67	(see Note 4.)	See Note 3
X-68	(see Note 4.)	See Note 3
X-69	(see Note 4.)	See Note 3
X-70	(see Note 4.)	See Note 3
X-71	(see Note 4.)	See Note 3
X-72	(see Note 4.)	See Note 3
X-73	(see Note 4.)	See Note 3
X-74	(see Note 4.)	See Note 3
X-75	(see Note 4.)	See Note 3
X-76	(see Note 4.)	Vented
X-77	(see Note 4.)	See Note 3

Table 6.2.6-4 Containment Vessel Pressure And Leak Test Reactor Building Containment Penetration Status (Page 4 of 7)

Penetration	Description	Status
X-78	(see Note 4.)	See Note 3
X-79A	(see Note 4.)	Vented
X-79B	(see Note 4.)	Vented
X-80	(see Note 4.)	Vented
X-81	(see Note 4.)	See Note 3
X-82	(see Note 4.)	See Note 3
X-83	(see Note 4.)	See Note 3
X-84B	(see Note 4.)	Normal Lineup
X-84C	(see Note 4.)	Normal Lineup
X-84D	(see Note 4.)	Normal Lineup
X-85A	(see Note 4.)	See Note 3
X-85B	(see Note 4.)	See Note 3
X-85C	(see Note 4.)	Vented (see Note 1)
X-85D	(see Note 4.)	Vented (see Note 1)
X-86D	(see Note 4.)	Vented (see Note 1)
X-87A	(see Note 4.)	Vented (see Note 1)
X-87B	(see Note 4.)	Normal Lineup
X-87C	(see Note 4.)	Normal Lineup
X-87D	(see Note 4.)	Normal Lineup
X-88	(see Note 4.)	Vented (see Note 1)
X-89	(see Note 4.)	Vented (see Note 1)
X-90	(see Note 4.)	Vented
X-91	(see Note 4.)	Vented
X-92A	(see Note 4.)	Vented
X-92B	(see Note 4.)	Vented
X-92D	(see Note 4.)	Vented (see Note 1)
X-93	(see Note 4.)	See Note 3
X-94A	(see Note 4.)	Vented (see Note 1)
X-94B	(see Note 4.)	Vented
X-94C	(see Note 4.)	Vented
X-95A	(see Note 4.)	Vented (see Note 1)
X-95B	(see Note 4.)	Vented
X-95C	(see Note 4.)	Vented
X-96A	(see Note 4.)	In Use (see Note 2)
X-96B	(see Note 4.)	In Use (see Note 2)
X-97	(see Note 4.)	Vented
X-98	(see Note 4.)	Vented (see Note 1)

Table 6.2.6-4 Containment Vessel Pressure And Leak Test Reactor Building Containment Penetration Status (Page 5 of 7)

Penetration	Description	Status
X-99	(see Note 4.)	Vented
X-100	(see Note 4.)	Vented
X-101	(see Note 4.)	Vented (see Note 1)
X-102	(see Note 4.)	Vented
X-103	(see Note 4.)	Vented (see Note 1)
X-104	(see Note 4.)	Vented (see Note 1)
X-105	(see Note 4.)	Vented
X-106	(see Note 4.)	See Note 3
X-107	(see Note 4.)	Normal Lineup
X-108	(see Note 4.)	Vented (see Note 1)
X-109	(see Note 4.)	Vented (see Note 1)
X-110	(see Note 4.)	Vented (see Note 1)
X-111	(see Note 4.)	Vented (see Note 1)
X-112	(see Note 4.)	Vented (see Note 1)
X-113	(see Note 4.)	Vented (see Note 1)
X-114	(see Note 4.)	In Use
X-115	(see Note 4.)	In Use
X-116	(see Note 4.)	Vented (see Note 1)
X-117	(see Note 4.)	Vented (see Note 1)
X-118	(see Note 4.)	In Use
X-119	(see Note 4.)	Vented (see Note 1)
X-120	Electrical Penetration	Vented (see Note 1)
X-121E	Electrical Penetration	Vented (see Note 1)
X-122E	Electrical Penetration	Vented (see Note 1)
X-123E	Electrical Penetration	Vented (see Note 1)
X-124E	Electrical Penetration	Vented (see Note 1)
X-125E	Electrical Penetration	Vented (see Note 1)
X-126E	Electrical Penetration	Vented (see Note 1)
X-127E	Electrical Penetration	Vented (see Note 1)
X-128E	Electrical Penetration	Vented (see Note 1)
X-129E	Electrical Penetration	Vented (see Note 1)
X-130E	Electrical Penetration	Vented (see Note 1)
X-131E	Electrical Penetration	Vented (see Note 1)
X-132E	Electrical Penetration	Vented (see Note 1)
X-133E	Electrical Penetration	Vented (see Note 1)
X-134E	Electrical Penetration	Vented (see Note 1)
X-135E	Electrical Penetration	Vented (see Note 1)
X-136E	Electrical Penetration	Vented (see Note 1)
X-137E	Electrical Penetration	Vented (see Note 1)
X-138E	Electrical Penetration	Vented (see Note 1)
X-139E	Electrical Penetration	Vented (see Note 1)
X-140E	Electrical Penetration	Vented (see Note 1)
X-141E	Electrical Penetration	Vented (see Note 1)
X-142E	Electrical Penetration	Vented (see Note 1)

Table 6.2.6-4 Containment Vessel Pressure And Leak Test Reactor Building Containment Penetration Status (Page 6 of 7)

Penetration	Description	Status
X-143E	Electrical Penetration	Vented (see Note 1)
X-144E	Electrical Penetration	Vented (see Note 1)
X-145E	Electrical Penetration	Vented (see Note 1)
X-146E	Electrical Penetration	Vented (see Note 1)
X-147E	Electrical Penetration	Vented (see Note 1)
X-148E	Electrical Penetration	Vented (see Note 1)
X-149E	Electrical Penetration	Vented (see Note 1)
X-150E	Electrical Penetration	Vented (see Note 1)
X-151E	Electrical Penetration	Vented (see Note 1)
X-152E	Electrical Penetration	Vented (see Note 1)
X-153E	Electrical Penetration	Vented (see Note 1)
X-154E	Electrical Penetration	Vented (see Note 1)
X-155E	Electrical Penetration	Vented (see Note 1)
X-156E	Electrical Penetration	Vented (see Note 1)
X-157E	Electrical Penetration	Vented (see Note 1)
X-158E	Electrical Penetration	Vented (see Note 1)
X-159E	Electrical Penetration	Vented (see Note 1)
X-160E	Electrical Penetration	Vented (see Note 1)
X-161E	Electrical Penetration	Vented (see Note 1)
X-162E	Seal Welded Spare	Vented (see Note 1)
X-163E	Electrical Penetration	Vented (see Note 1)
X-164E	Electrical Penetration	Vented (see Note 1)
X-165E	Electrical Penetration	Vented (see Note 1)
X-166E	Electrical Penetration	Vented (see Note 1)
X-167E	Electrical Penetration	Vented (see Note 1)
X-168E	Electrical Penetration	Vented (see Note 1)
X-169E	Electrical Penetration	Vented (see Note 1)
X-170E	Electrical Penetration	Vented (see Note 1)
X-171F	Electrical Penetration	Vented (see Note 1)
X-172E	Electrical Penetration	Vented (see Note 1)
X-173E	Electrical Penetration	Vented (see Note 1)
X-174E	Electrical Penetration	Vented (see Note 1)

Table 6.2.6-4 Containment Vessel Pressure And Leak Test Reactor Building Containment Penetration Status (Page 7 of 7)

Penetration	Description	Status
B. TESTABLE PENETRATIONS REQUIRED TO BE INSERVICE DURING TEST PERFORMANCE		
X-26A X-26B	(see Note 4)	Isolation valves required to be open to monitor containment pressure (see Note 2)
X-47A	(see Note 4)	Glycol cooling supply to air handling units in ice condenser required to ensure ice condition is maintained
X-47B	(see Note 4)	Same as X-47A
X-54	(see Note 4)	Used as pressurization point for air compressors
X-96A X-96B	(see Note 4)	Isolation valves required to be open to monitor containment pressure (see Note 2)
X-107	(see Note 4)	Residual heat removal system required inservice to remove decay heat from fuel
X-114	(see Note 4)	Glycol return from air handling units required to ensure ice condition is maintained
X-115	(see Note 4)	Same as X-114
X-118	(see Note 4)	Used as source for verification flow and post-test depressurization; opened during DBF event to drain water from annulus to Reactor Building floor and equipment drain sump

Table 6.2.6-4 Containment Vessel Pressure And Leak Test Reactor Building Containment Penetration Status

Notes:

1. These penetrations are closed. Venting is provided by the design of the penetration such that any leakage is detectable by the integrated leak rate test.

2. These penetrations are designed to facilitate ILRT performance. It may not be necessary to utilize all of the penetrations. If not in use, the penetration is vented.

3. These penetrations may remain water filled and/or unvented to facilitate planning and scheduling or for ALARA consideration provided they have been Type B or C tested within the previous 24 months.

4. See Table 6.2.4-1 for Description.

THIS PAGE INTENTIONALLY LEFT BLANK