Pacific Gas and
Electric Company

Lawrence F. Womack
Vice President
Nuclear Services

Diablo Canyon Power Plant
P.O. Box 56
Avila Beach, CA 93424

805.545.4600
Fax: 805.545.4234

December 21, 2001

PG&E Letter DIL-01-004

U.S. Nuclear Regulatory Commission
ATTN: Document Control Desk
Washington, DC 20555-0001

Docket No. 72-26
Diablo Canyon Independent Spent Fuel Storage Installation
Submittal of Non-Proprietary Calculation Packages

Dear Commissioners and Staff:

By letter dated December 21, 2001, Pacific Gas and Electric Company (PG&E) submitted an application to the Nuclear Regulatory Commission (NRC) requesting a site-specific license for an Independent Spent Fuel Storage Installation (ISFSI) at the Diablo Canyon Power Plant (DCPP). The application included a Safety Analysis Report, Environmental Report, and other required documents in accordance with 10 CFR 72.

Pertinent calculations performed in support of the Diablo Canyon ISFSI license application are enclosed as 24 non-proprietary attachments. Proprietary versions of the Holtec calculations (Attachments 1 through 10) are being transmitted to the NRC in a separate submittal (PG&E Letter DIL-01-007, dated December 21, 2001). These calculation packages are intended for use by the NRC staff in their review of the application.

If you have any questions regarding the enclosed calculations, please contact Mr. Terence Grebel at (805)595-6382.

Sincerely,

Lawrence F. Womack

cc: Timothy J. Kobetz
Ellis W. Merschoff
David L. Proulx
Girija S. Shukla w/o Enclosure
David A. Repka
Brian Gutherman w/o Enclosure
Thomas A. Moulia w/o Enclosure
Roy B. Willis w/o Enclosure
Diablo Distribution w/o Enclosure

Enclosure

NMSS01 1/2 SETS

Paper Cy Files T. Kobetz

LIST OF ATTACHED NON-PROPRIETARY CALCULATION PACKAGES

1. Structural Evaluation of Diablo Canyon Cask Transfer Facility
   Calculation HI-2012626

2. Analysis of Transmission Tower Collapse Accidents at the Diablo Canyon ISFSI Pad and CTF
   Calculation HI-2012634

3. Dose Evaluation for the ISFSI at the Diablo Canyon Power Station
   Calculation HI-2002563

4. Diablo Canyon ISFSI Site Boundary Confinement Analysis
   Calculation HI-2002513

5. Analysis of Anchored HI-STORM Casks at the Diablo Canyon ISFSI
   Calculation HI-2012618

6. Transporter Stability on Diablo Canyon Dry Storage Travel Paths
   Calculation HI-2012768

7. Design Basis Wind and Tornado Evaluation for DCPP
   Calculation HI-2002497

8. Evaluation of Site-Specific Blasts and Explosions for the Diablo Canyon ISFSI
   Calculation HI-2002512

9. Evaluation of the Effects of Lightning and a 500kV Line Break on Holtec Casks
   Calculation HI-2002559

10. Evaluation of Site-Specific Wild Fires for the Diablo Canyon ISFSI
    Calculation HI-2012615

11. ISFSI Cask Storage Pad Seismic Analysis
    Calculation PGE-009-CALC-003

12. Embedment Support Structure
    Calculation PGE-009-CALC-001

13. Cask Transfer Facility (Reinforced Concrete)
    Calculation PGE-009-CALC-002

14. Non-Linear Seismic Sliding Analysis of ISFSI Pad
    Calculation 52.27.100.704

15. Determination of Rock Anchor Design Parameters for DCPP ISFSI Cutslope
    Calculation GEO.DCPP.01.08; PG&E Calculation 52.27.100.718

16. Analysis of Bedrock Stratigraphy and Geologic Structure at the DCPP ISFSI Site
    Calculation GEO.DCPP.01.21; PG&E Calculation 52.27.100.731

17. Kinematic Stability Analysis for Cutslopes at DCPP ISFSI Site
    Calculation GEO.DCPP.01.22; PG&E Calculation 52.27.100.732

18. Pseudostatic Wedge Analysis of DCPP ISFSI Cutslopes (SWEDGE Analysis)
    Calculation GEO.DCPP.01.23; PG&E Calculation 52.27.100.733

19. Stability and Yield Acceleration Analysis of Cross Section I-I'
    Calculation GEO.DCPP.01.24; PG&E Calculation 52.27.100.734

20. Determination of Seismic Coefficient Time Histories for Potential Sliding Masses Along Cut Slope Behind ISFSI Pad
    Calculation GEO.DCPP.01.25; PG&E Calculation 52.27.100.735

21. Determination of Earthquake Induced Displacements of Potential Sliding Masses on ISFSI Slope
    Calculation GEO.DCPP.01.26; PG&E Calculation 52.27.100.736

22. Stability and Yield Acceleration Analysis of Potential Sliding Masses Along DCPP ISFSI Transport Route
    Calculation GEO.DCPP.01.28; PG&E Calculation 52.27.100.738

23. Determination of Seismic Coefficient Time Histories for Potential Sliding Masses on DCPP ISFSI Transport Route
    Calculation GEO.DCPP.01.29; PG&E Calculation 52.27.100.739

24. Determination of Earthquake Induced Displacements of Potential Sliding Masses Along DCPP ISFSI Transport Route
    Calculation GEO.DCPP.01.30; PG&E Calculation 52.27.100.740

NON-PROPRIETARY CALCULATIONS

Book 1 of 8

Attachments to PG&E Letter DIL-01-004
Dated December 21, 2001

HOLTEC
INTERNATIONAL

Holtec Center, 555 Lincoln Drive West, Marlton, NJ 08053
Telephone (856) 797- 0900
Fax (856) 797 - 0909

STRUCTURAL EVALUATION OF DIABLO CANYON CASK TRANSFER FACILITY

FOR

PG&E

Holtec Report No: HI-2012626

Holtec Project No: 1073

Report Class : SAFETY RELATED

NON-PROPRIETARY VERSION

DOCUMENT NAME: Structural Evaluation of Diablo Canyon Cask Transfer Facility

DOCUMENT NO.:	2012626	CATEGORY: ☐ GENERIC
PROJECT NO.:	1073	X PROJECT SPECIFIC

Rev. No. [2]	Date Approved	Author's Initials	VIR #	Rev. No.	Date Approved	Author's Initials	VIR #
0	2/17/01	LIT	196988	3	9/14/01	AIS	168459
1	3/29/01	LIT	598640	4	10/02/01	AIS	518379
2	5/25/01	LIT	727601	5	11/6/01	AIS	744218

DOCUMENT CATEGORIZATION

In accordance with the Holtec Quality Assurance Manual and associated Holtec Quality Procedures (HQPs), this document is categorized as a:

X Calculation Package[3] (Per HQP 3.2)

☐ Technical Report (Per HQP 3.2) (Such as a Licensing Report)

☐ Design Criterion Document (Per HQP 3.4)

☐ Design Specification (Per HQP 3.4)

☐ Other (Specify):

DOCUMENT FORMATTING

The formatting of the contents of this document is in accordance with the instructions of HQP 3.2 or 3.4 except as noted below:

DECLARATION OF PROPRIETARY STATUS

This document is labeled:

X Nonproprietary ☐ Holtec Proprietary ☐ TOP SECRET

Documents labeled TOP SECRET contain extremely valuable intellectual/commercial property of Holtec International. They cannot be released to external organizations or entities without explicit approval of a company corporate officer. The recipient of Holtec's proprietary or Top Secret document bears full and undivided responsibility to safeguard it against loss or duplication.

DOCUMENT NAME: Structural Evaluation of Diablo Canyon Cask Transfer Facility

DOCUMENT NO.:	2012626	CATEGORY: ☐	GENERIC
PROJECT NO.:	1073	X	PROJECT SPECIFIC

Rev. No.[2]	Date Approved	Author's Initials	VIR #	Rev. No.	Date Approved	Author's Initials	VIR #
6	12/4/01	AIS	20537	9			
7	12/10/01	AIS	703005	10			
8				11			

DOCUMENT CATEGORIZATION

In accordance with the Holtec Quality Assurance Manual and associated Holtec Quality Procedures (HQPs), this document is categorized as a:

X Calculation Package[3] (Per HQP 3.2)

☐ Technical Report (Per HQP 3.2) (Such as a Licensing Report)

☐ Design Criterion Document (Per HQP 3.4)

☐ Design Specification (Per HQP 3.4)

☐ Other (Specify):

DOCUMENT FORMATTING

The formatting of the contents of this document is in accordance with the instructions of HQP 3.2 or 3.4 except as noted below:

DECLARATION OF PROPRIETARY STATUS

This document is labeled:

X Nonproprietary ☐ Holtec Proprietary ☐ TOP SECRET

Documents labeled TOP SECRET contain extremely valuable intellectual/commercial property of Holtec International. They cannot be released to external organizations or entities without explicit approval of a company corporate officer. The recipient of Holtec's proprietary or Top Secret document bears full and undivided responsibility to safeguard it against loss or duplication.

Notes

1. This document has been subjected to review, verification and approval process set forth in the Holtec Quality Assurance Procedures Manual. Password controlled signatures of Holtec personnel who participated in the preparation, review, and QA validation of this document are saved in the N drive of the company's network. The Validation Identifier Record (VIR) number is a random number that is generated by the computer after the specific revision of this document has undergone the required review and approval process, and the appropriate Holtec personnel have recorded their password controlled electronic concurrence to the document.

2. A revision to this document will be ordered by the Project Manager and carried out if any of its contents is materially affected during evolution of this project. The determination as to the need for revision will be made by the Project Manager with input from others, as deemed necessary by him.

3. Revisions to Calculation Packages may be made by adding supplements to the document and replacing the "Table of Contents" and the "Revision Log".

HOLTEC SAFETY SIGNIFICANT DOCUMENTS

To gain acceptance as a *safety significant* document in the company's quality assurance system, this document is required to undergo a prescribed review and concurrence process that requires the preparer and reviewer(s) of the document to answer a long list of questions crafted to ensure that the document has been purged of all errors of any material significance. A record of the review and verification activities is maintained in electronic form within the company's network to enable future retrieval and recapitulation of the programmatic acceptance process leading to the acceptance and release of this document under the company's QA system. Among the numerous requirements that this document must fulfill, as applicable, to muster approval within the company's QA program are:

The preparer(s) and reviewer(s) are technically qualified to perform their activities per the applicable Holtec Quality Procedure (HQP).

The input information utilized in the work effort is drawn from referencable sources. Any assumed input data is so identified.

All significant assumptions are stated.

The analysis methodology is consistent with the physics of the problem.

Any computer code and its specific versions used in the work have been formally admitted for use within the company's QA system.

The format and content of the document is in accordance with the applicable Holtec quality procedure.

The material content of the report is understandable to a reader with the requisite academic training and experience in the underlying technical disciplines.

Once a safety significant document, completes its review and certification cycle, it should be free of any materially significant error and should not require a revision unless its scope of treatment needs to be altered. Except for regulatory interface documents (i.e., those that are submitted to the NRC in support of a license amendment and request), editorial revisions to Holtec *safety significant* documents are not made unless such editorial changes are deemed necessary by the Holtec Project Manager to prevent erroneous conclusions from being inferred by the reader. In

other words, the focus in the preparation of this document is to ensure correctness of the technical content rather than the cosmetics of presentation".

REVISION LOG

Revision 0 – Original issue.

Revision 1 – This revision is issued to incorporate the editorial changes suggested by PG&E. Attachment C is added to this revision, which reanalyzes the seismic loads on the CTF in order to assess the magnifications of dynamic response due to the structural flexibility in vertical direction.

Revision 2 - This revision is issued to incorporate the design changes made to the CTF structural components and revise the seismic analysis of the structure. Attachment D that presents the finite element analysis of the jack support plate is added to this revision. In this revision, maximum acceleration values, rather than ZPA values, from the response spectra curves are used in order to provide bounding estimates of restraint loads.

Revision 3 - This revision incorporates client comments on Rev. 2. Analyses and text are revised accordingly, as applicable. The analyses and drawings are reconciled as necessary. Attachment D revised to reflect FEA with discrete support rather than continuous support. Attachment C revised to use 2% damping curve for DDE. Attachment A revised to reflect all comments necessitating revision to calculations. Attachment A also revised to allow for increase of 1.33 for Level B allowables.

Additional comments incorporated after a review by PG&E of a Rev. 3 Draft. A note on natural frequencies added to Attach. D, Attachment A added a calculation on local stiffeners. Main text in Section 1.2 added statements on the design of the HI-TRAC restraint lugs and the mating device.

Revision 4 Attachment A revised to add a paragraph in subsection 10.6.1 noting addition of ring in lieu of web stiffeners. Affected documents are that Attachment plus main section review log. Revised docs stored as Rev4 subdirectory.

Revision 5 Addresses some comments by the Professional Engineer. Increased weights of mating device (from 11000 lb. To 15000 lb.) and lift platform and jacks (from 26000 lb. To 29000 lb.) to ensure upper bound. Affected components are in the main text (sec. 4.1) and Attachment A (where updated increased weights causes slight change in safety factors). A "rev 5" directory holds these changed files.

Revision 6 At client's request, analysis was revised to eliminate upper restraint of HI-TRAC during transfer. This required an increase in the bending capacity of the mating device. The net result is that instead of requiring that HI-TRAC top restraints be added to support a specified load (with the implicit assumption that stiffnesses can be assigned to ensure that the full load can be developed), the requirement is that we provide a mating device and strengthen adjacent HI-TRAC and HI-STORM as required to meet a specified bending moment capacity. Actual revisions to the report are:

Attachment E completely replaced with new calculation and new FE analysis reflecting an overhung beam.

Attachment C reprinted with new "g" values reflecting response at lowest frequency as determined from Attachment E.

Attachment A redone to reflect new (lower) input seismic values. Also modified in Rev. 6 are some input weights, which are increased to provide more conservatism.

The text has been modified as necessary to reflect the new values and results in accordance with the attachment modifications.

Revision 7 Minor typographical changes per client e-mail of 12/8/01 No change in calculations; all are clarifications. The changed components are the main text and Attachment C.

"The revision status of Holtec documents cited above is subject to updates as the project progresses. This document will be revised if a revision to any of the above-referenced Holtec work products materially affects the instructions, results, conclusions or analyses contained in this document. Otherwise, a revision to this document will not be made and the latest revision of the referenced Holtec documents shall be assumed to supersede the revision numbers cited above. The Holtec Project Manager bears the undivided responsibility to ensure that there is no intra-document conflict with respect to the information contained in all Holtec generated documents on a safety significant project".

TABLE OF CONTENTS

HOLTEC SAFETY SIGNIFICANT DOCUMENTS 4

REVISION LOG 5

TABLE OF CONTENTS 8

1.1 INTRODUCTION 10
1.2 LOAD PATHS 12
1.3 SCOPE 14

2.0 METHODOLOGY AND ACCEPTANCE CRITERIA 16

2.1 METHODOLOGY 16
2.2 ACCEPTANCE CRITERIA 18

3.0 ASSUMPTIONS 24

4.0 DESIGN INPUT 26

4.1 INPUT WEIGHTS (FOR CTF STRUCTURE DESIGN IN ATTACHMENT A) 26
4.2 INPUT GEOMETRY 27
4.3 INPUT MATERIAL PROPERTIES 28
4.4 INPUT LOADS 29

5.0 REFERENCE DOCUMENTS AND COMPUTER FILES 32

5.1 REFERENCES 32
5.2 COMPUTER CODES AND COMPUTER FILES 33

6.0 CALCULATIONS 38

7.0 SUMMARY AND CONCLUSIONS 39

7.1 LOADS ON THE RESTRAINTS AND SURROUNDING CONCRETE 39
7.2 SAFETY FACTORS FOR CTF STRUCTURAL COMPONENTS 39

8.0 FIGURES 40

Attachment A: Analyses of Diablo Canyon CTF Structure

Attachment B: Facsimile Message for Joyce Screw Jacks

Attachment C: Seismic Response of the CTF Structure

Attachment D: FE Analysis of Jack Support Plate

Attachment E: Calculation of Lowest Natural Frequency of the Stacked HI-TRAC/HI-STORM Considered as an Overhung Beam

1.0 INTRODUCTION AND SCOPE

1.1 Introduction

The Cask Transfer Facility (CTF) at the Diablo Canyon Power Plant (DCPP) is used in conjunction with the transporter to effectuate MPC transfers between the HI-TRAC transfer cask, HI-STORM 100SA overpack and HI-STAR 100 overpack. Prior to the transfer operation, the empty HI-STORM 100SA or HI-STAR 100 overpack is placed in the CTF using the cask transporter. The CTF lowers the overpack to the full down position where it can be mated to the HI-TRAC 125D transfer cask by using a mating device lid. The mating device load carrying capacity is presumed to be sufficient to support the HI-TRAC without the need for any tie-down of the HI-TRAC to the transporter or to ground. After the MPC is transferred to the HI-STORM 100SA overpack, the top lid and the lifting brackets are installed. The transporter, with lifting attachments installed on its lift beam, is then positioned directly over the overpack lifting brackets. The CTF raises the loaded overpack until it is in a position where it can be mated with the lifting attachments on the transporter lifting beam. In this position, the transporter raises the overpack out of the cask transfer facility to place it on the ISFSI pad for storage.

Figure 8.1 presents a general layout of the Cask Transfer Facility. Per Holtec Drawing [5.3], the cask transfer facility includes the following main structural components (item numbers refer to callouts on the various drawing sheets):

Main Shell (Item 1) – A cylindrical shell forms the opening in the ground into which the overpack is lowered and provides the support for the lifting jacks. Three U-shaped extensions run the length of the cylinder shell and provide columns to transfer the vertical loads from the jacks to the base. The overpack sits on the lifting platform (a built-up plate structure) that is supported by the screw jacks. A cylindrical platform base support (by others), located at the

bottom of the shell, provides a set down location and direct compression member for the lifting platform when the lifting platform is fully lowered. Removable seismic restraints that resist horizontal loads at the top of the CTF shell secure the cask from overturning during earthquakes. Any radial gap between the restraint and the cask outer shell is minimized to avoid load amplifications due to impact. The area surrounding and external to the main shell is backfilled with concrete after CTF shell installation. The concrete backing (by others) serves to transfer the loads form the CTF to the surrounding rock.

Lifting Jacks (Item 13) – Three lifting jacks provide the means to raise and lower the lifting platform. They are located in the extensions on the circumference of the main shell. The jacks are supported at the top and have traveling nuts that operate in unison to keep the platform level during vertical motion. The lifting load results in tension in the lifting jacks. The connection between the jack and the platform ensures that no lateral loads from the lifting platform during a seismic event are transferred to the jacks but are transferred directly to the backing concrete.

Jack Support Platform – Jack platform support plate (Item 4 in [5.3]) is bolted on the top of the shell extension to provide support for the lifting jack. The jack plate transfers the load to the CTF shell through vertical jack support bars (Items 8 and 12 in [5.3]) welded to the CTF shell extension. The reactions from the platform plate are distributed to the vertical bars through a jack seat plate (Item9 in [5.3]).

CTF Base Support Blocks – In a full down position, the CTF lifting platform is supported directly by the base support blocks (Items 36). The blocks transfer the vertical loads from the overpack/transfer cask stack from the lifting platform to the base concrete. The top cover sheets of material with a low friction resistance minimize the transfer of horizontal loads from the lifting platform to the base blocks. The base support blocks are provided by others and are installed after the CTF shell is in place and leveled.

Lifting Platform – A lifting platform provides the support of the HI-STORM or HI-STAR Overpack and transmits the vertical force from the overpack to the three lifting jacks. Horizontal forces are transmitted directly to the concrete. During the lifting operation, a uniform loading of the lifting platform is afforded by the location and controlled movement of the jacks. Outer and inner support plates (Items 17 to 21 in [5.3]), together with the top and bottom platform cover plates (Items 14 and 15), form the lifting platform structural frame. The top cover plate (Item 15) provides a base onto which the overpack rests. Four vent plates (Item 28), welded to the top cover plate and positioned in the air inlet ducts of HI-STORM, transfer horizontal loads from the overpack to the platform if sliding friction is overcome during a seismic event. These vent plates also serve to position the overpack on the lifting platform. The platform has extensions that enter into each main shell extensions to interface with the lifting jacks. The lateral load from the lifting platform is transferred directly to the surrounding concrete through sets of solid vertical bars (Items 27, and 31 in [5.3]) welded on the lifting platform and the CTF shell extensions. The loads that are applied close to the periphery of the top cover plate are transferred directly to the CTF base support blocks through compression drum plates welded to platform plates around the platform periphery (Items 29 and 30 in [5.3]). The peripheral plates are connected to the platform frames outer plates (Item 17) with gussets (Item 20). Support plates (Items 19 and 21) bridge the gap between the outer support plates (Item 17) at the platform extensions.

1.2 Load Paths

This section contains a brief description of the various load paths; three distinct configurations are discussed: 1) Lifting/Lowering; 2) MPC Transfer; and 3) Seismic. Of the three configurations, only the seismic configuration results in lateral loads being applied to the CTF components.

Lifting/Lowering – During lifting (or lowering), the vertical load from a loaded HI-STORM/HI-STAR is supported by bending of the main members of the platform. The lifting platform is supported at three points by the screw jacks. The screw jack is supported by the screw jack support platform, and the screw jack support platform is supported on three sides by discrete jackscrew vertical support bars.

MPC Transfer – During MPC transfer, the HI-TRAC transfer cask is attached to the top of the HI-STORM/HI-STAR (through the mating device). The MPC is attached to the transporter, which provides the lifting/lowering support to the MPC. However, prior to initiating the transfer operation, the MPC is supported by the pool lid of the HI-TRAC so the entire weight of the HI-TRAC, the loaded MPC, and the empty HI-STORM/HI-STAR must be supported by the CTF. In this configuration, the CTF lifting platform is in the full down position and rests on the concrete base support blocks. The screw jacks are not loaded and the total vertical load is transferred from the platform to the base support blocks and from there into the foundation. Once the transporter is positioned over the HI-STORM and a mating between HI-TRAC and HI-STORM/HI-STAR has been effected, the transporter must be restrained against sliding. This restraint must remain in place until the transporter is ready to move to ensure that if a seismic event occurs at any time during the transfer operation, no transporter movement occurs relative to the stacked HI-TRAC and HI-STORM/HI-STAR.

Seismic - During a seismic event that occurs during MPC transfer (with the transfer cask stacked on the storage or transport cask), the net vertical load may increase and horizontal loads develop. These horizontal loads act at the centroid of the various components and are proportional to the mass of the component times the acceleration from the horizontal response spectra at the lowest natural frequency of the system (to account for system flexibility). The input seismic excitations are determined from a natural frequency analysis of the stacked system considered as a beam that is supported against lateral displacement at the base and at the top of

the CTF. The vertical loads are the mass of a component multiplied by the zero period acceleration from the vertical response spectrum since the components are rigid in the vertical direction. The horizontal loads result in an overturning moment on the stacked configuration that is resisted by a combination of lateral resistance through contact with the surrounding reinforced concrete structure (at the level of the lifting platform and at grade level) and by a resisting moment at the base of the lifting platform due to a shift in the center of pressure of the net vertical load. During a seismic event that occurs during a lifting operation, the center of pressure of the vertical load from the lifted cask shifts on the lifting platform so as to provide a resisting moment. Additional lateral support is provided by contact with the CTF shell backed by the surrounding reinforced concrete structure. All lateral loads imparted to the lifting platform are transmitted to the walls of the extension shell and finally reacted by the surrounding reinforced concrete structure. During all seismic events evaluated in this report, it is assumed that the transporter is "attached" to ground. Once the loaded HI-STORM/HI-STAR has been raised from the CTF and pinned to the lifting attachments on the transporter lift beam, the restraint of the transporter to ground is removed. At this point in time, the tranporter/cask assemblage must be considered for wind and seismic loading. The response of the assemblage to environmental excitations is addressed in Reference [5.22]. The transporter is itself rigid (is designed to have a lowest global natural frequency in excess of 33 Hz) in determining its response to environmental excitations.

1.3 Scope

This Design Report documents the structural analyses and evaluations of the Cask Transfer Facility (CTF) at the Diablo Canyon ISFSI. The capacity of the following CTF structural components is evaluated: the lifting jacks, the jack support platforms, the shell extensions, and the lifting platform. The calculations provide the loads on the CTF platform base support, the CTF shell and surrounding concrete under the specified service Level A load conditions and

seismic Level B and Level D load conditions. Mating device capacity required to ensure stabilization of the stacked assemblage during a seismic event occurring during the transfer operation, is also provided.

Four different loading scenarios are considered: (1) lifted HI-STORM, (2) lifted HI-STAR, (3) HI-TRAC stacked on lowered HI-STORM, and (4) HI-TRAC stacked on lowered HI-STAR. The analysis of the CTF response under loads from the lifted HI-STORM or HI-STAR overpacks provides the tensile stresses in the lifting jacks as well as bending stresses in the jack support plates and lifting platform frames. The compressive stresses in the CTF shell extension under lifting jack load are also evaluated and used for design of the shell and shell extension channels. The static and quasi-static seismic analyses of the stack configurations provide the magnitude of the loads on the lifting platform, base support blocks, the mating device, the shell top restraints, and demonstrate that under none of the loading scenarios are top restraints on HI-TRAC required. The results from the seismic analysis are used for design of the lifting platform vent plates and periphery plates.

The load path through the mating device is not described in this section and the qualification of the mating device is not considered in this report. In Attachment A, however, it is shown that if the mating device has an appropriate moment capacity, then no additional restraint of HI-TRAC is required. The loading on the mating device, (not part of the CTF) is also determined in Sections A.8.6 and A.9.6 for Level B and D load levels, respectively. The final design analysis of the mating device will use these loads as design inputs.

2.0 METHODOLOGY AND ACCEPTANCE CRITERIA

2.1 Methodology

The analysis evaluates the loads on the CTF structural components under static loads (dead weight and apparent dead weight loads) and quasi-static loads (seismic and wind loads) by considering force and moment equilibrium.

The bounding values for the weights of the spent fuel casks and canisters are used to evaluate the dead loads applied on the CTF structure. In accordance with [5.1 and 5.2], the apparent dead loads consider the inertia amplification during the lifting operation by increasing (by 15%) the dead load from the lifted HI-STORM and HI-STAR overpacks that loaded with the MPC. The methodology specified in Section 6 of the ASCE 7-88 Standard [5.11] is used to evaluate the quasi-static wind pressures on the casks in compliance with requirements of Section 6.2.1.2 in PG&E Specification [5.10]. The stresses in the lifting platform frames, the shell extensions, lifting jacks, and the jack support plates are evaluated under the combined action of the apparent dead loads and the design wind loads and then compared with the Level A allowables.

Quasi-static stability analyses provide magnitudes of the seismic loads on the CTF structure during the specified earthquake excitations. The stack configuration (Figure 8.3) is qualified using the most limiting combination of design loads for two different loading scenarios that include the HI-TRAC stacked on lowered HI-STORM or the HI-TRAC stacked on lowered HI-STAR. The transfer of the MPC (the confinement boundary) occurs while the HI-TRAC and HI-STORM or HI-STAR overpack are in the stacked configuration. The analysis is performed for the most limiting case when the MPC is in the HI-TRAC.

The driving quasi-static inertia forces are obtained as the product of the casks inertia and the seismic coefficients obtained from the ground accelerations spectra for the four specified design

basis seismic events, designated as: Design Earthquake (DE), Double Design Earthquake (DDE), Hosgri Earthquake (HE), and Long Term Seismic Program (LTSP). The appropriate spectral values from the ground acceleration spectra (rather than the Zero Period Acceleration values) are selected as horizontal seismic coefficients in order to account for possible amplifications of the horizontal accelerations (due to structure flexibility) of the stack. Attachment E provides the supporting evaluation to justify the absence of any additional "multi-mode" amplification. Attachment E has determined the first three modes of the stacked system, considered as a beam with varying geometry and inertia properties reflecting the HI-STORM and the HI-TRAC. The first mode has a natural frequency of 19.851 Hz and is the lowest lateral vibration mode. The second mode has a natural frequency of 65.7 Hz and is a longitudinal mode. The third mode has a natural frequency of 76.906 and is the second horizontal mode. Based on the results, the seismic accelerations are taken at the first mode frequency since this is beyond the peak of the spectra curve and is the only frequency below 33 Hz. Zero Period Acceleration (ZPA) values are used for the vertical seismic coefficients since the stacked units are essentially resting on the ground when a seismic analysis is considered.

The stresses in the CTF structural components are evaluated under the combined action of the dead loads and the Design Basis DE seismic loads and are compared with the Level B allowables. The analysis also compares the reactions from the seismic inertia forces on CTF from all of the three Level D design basis earthquakes to establish the most critical combinations of the seismic load components. The Newmark 100-40-40 Method is used to combine the three specified directions of the LTSP and HE seismic load in accordance with Section 6.2.5 v of the PG&E Specification [5.10]. The DE and DDE seismic loads are combined with 100% of their magnitudes in each direction in accordance with the PG&E Specification [5.10]. The response of the CTF structural components under the most critical combination of seismic loads is evaluated and compared with the Level D allowables.

Strength-of-materials solutions from the theory of elasticity provide the stresses in the CTF structural components and weld connections. The ratio of the allowable stresses to the calculated stresses in the components and welds defines safety factors for Level A, Level B and Level D load conditions.

2.2 Acceptance Criteria

The condition when the stresses in the CTF structural components and weld connections under combination of wind loads or DE seismic loads and dead or apparent dead loads are lower than the stresses allowed by the Section III, Subsection NF of the ASME Code [5.7] establishes the condition for their structural acceptability for service (Level A and Level B) loading conditions. The lifting jacks, as primary lifting components, must meet the requirements of Section 4.2 of ANSI N14.6 [5.6] under the combination of apparent dead load and design wind load. The condition when the stresses in the CTF structural components and weld connections under combination of severe seismic (DDE, HE, and LTSP) loads and dead loads are lower than the stresses mandated by the ASME Code Section III, Appendix F [5.9] establishes the structural acceptability of the CTF structure for Level D loading conditions.

The following are the allowables mandated by the governing codes:

NF Requirements for Linear Structures per NF-3320

The stress limits presented below are derived from the ASME Code, Section III, Subsection NF [5.7]. The parameters and the terminology are in accordance with the ASME Code. Material properties are obtained from the ASME Code [5.8].

(i) Normal Conditions (Level A)

Section NF-3322 of ASME Code [5.7] specifies the following allowable stresses for normal loading condition (Level A or Level B):

a. Allowable stress in tension on a net section:

$$F_t = 0.6\ S_y \qquad \text{[Eq. 1]}$$

Where, S_y = yield stress at temperature, and F_t is equivalent to primary membrane stress.

b. Allowable stress in shear on a net section [5.7, NF-3322 (b) Eq. 3a]:

$$F_v = 0.4\ S_y \qquad \text{[Eq. 3a]}$$

c. Allowable stress in compression on a net section:

$$F_a = \frac{(1-(kl/r)^2/(2C_c^2))S_y}{5/3+(3kl/r)/8C_c-(kl/r)^3/8C_c^3} \qquad \text{[Eq. 4]}$$

where kl/r is based on the full height and cross section of the region, does not exceed 120 for all sections, and is less than C_c.

$$C_c = \sqrt{2\pi^2 E/S_y}$$

In the above equation,

l = unsupported length of component

k = length coefficient which gives influence of boundary conditions. The following values are appropriate for the described end conditions:

- 1 (simple support both ends)

- 2 (cantilever beam)
- ½ (clamped at both ends)

r = radius of gyration of component

Where kl/r > C_c, then per Eq. 7 in Section NF-3222 of [5.7], the allowable stress in compression shall be:

$$F_a = \frac{12\pi^2 E}{23(kl/r)^2}$$ E = Young's Modulus of the steel.

d. Maximum allowable bending stress at the outermost fiber of a net section, due to flexure about one plane of symmetry:

$F_b = 0.60\ S_y$ (equivalent to primary bending) [Eq. 16]

e. Combined bending and compression on a net section satisfies:

$$\frac{f_a}{F_a} + \frac{C_{mx} f_{bx}}{D_x F_{bx}} + \frac{C_{my} f_{by}}{D_y F_{by}} < 1$$ [Eq. 20]

where:

f_a = Direct compressive stress in the section

f_{bx} = Maximum bending stress along x-axis

f_{by} = Maximum bending stress along y-axis

C_{mx} = 0.85

$C_{my} = 0.85$

$D_x = 1 - (f_a/F'_{ex})$

$D_y = 1 - (f_a/F'_{ey})$

$F'_{ex,ey} = (\pi^2 E)/(2.15\ (kl/r)^2_{x,y})$

E = Young's Modulus

and subscripts x,y reflect the particular bending plane.

f. Combined flexure and compression (or tension) on a net section:

$$\frac{f_a}{0.6 S_y} + \frac{f_{bx}}{F_{bx}} + \frac{f_{by}}{F_{by}} < 1.0 \qquad \text{[Eq. 21]}$$

The above requirements are to be met for both direct tension and compression.

g. Fillet Welds

Per Table NF-3324.5 (a)-1, the allowable maximum shear stress on the net section of a fillet weld is given by:

$F_w = 0.3\ S_u$

where S_u is the weld material ultimate strength at temperature. For fillet weld legs in contact with base metal, the shear stress on the gross section is limited to $0.4S_y$, where S_y is the base metal material yield strength at temperature.

(ii) <u>Dead plus Live plus DE Seismic Load Condition (Level B)</u>

Per Table NF-3523(b)-1, a multiplier of 1.33 may be applied to direct, bending, shear, buckling, and weld limits (subject to upper limits on buckling and weld throat shear stress.

(iii) Extreme Environmental Conditions (Level D)

Section F-1334 (ASME Section III, Appendix F) [5.9], states that the limits for the Level D condition are the minimum of 1.2 (S_y/F_t) or ($0.7S_u/F_t$) times the corresponding limits for the Level A condition. S_u is ultimate tensile stress at the specified design temperature.

Exceptions to the above general multiplier are the following:

a) Stresses in shear shall not exceed the lesser of $0.72S_y$ or $0.42S_u$.

b) Axial Compression Loads shall be limited to 2/3 of the calculated buckling load.

c) Combined Axial Compression and Bending - The equations for Level A conditions shall apply except that:

F_a = 0.667 x Buckling Load / Gross Section Area,

and the terms F'_{ex} and F'_{ey} may be increased by the factor 1.65.

d) For welds, the Level D allowable maximum weld stress is not specified in Appendix F of the ASME Code. An appropriate limit for weld throat stress is conservatively set here as:

$$F_w = (0.42\ S_u)$$

This limit has been accepted by the USNRC in similar applications where NF limits are imposed.

Strength Requirements per ANSI N14.6

Per ANSI N14.6 code [5.6], the applicable components must have primary stress levels below the minimum of one-sixth the yield strength or one-tenth the ultimate strength at the design temperature under the lifted load (including a 15% dynamic load factor).

3.0 ASSUMPTIONS

The necessary assumptions governing each separate analysis are documented in the respective attachments to this calculation package. The following assumptions are applicable to all analyses undertaken to support this document.

3.1 The buckling analysis of the CTF shell extension conservatively neglects the stiffness of the remaining shell and the support provided by the surrounding concrete when evaluating the allowable compressive load.

3.2 The calculations conservatively neglect the stiffness of the inner plates when evaluating the capacity of the lifting platform frame. It is assumed that the beams formed by the three outer support plates resist all of the loads that are applied on the platform.

3.3 The analysis of the lifting platform frame conservatively assumes that each of the three beams formed by the outer support plates takes load with magnitude equal the sum of the forces in the lifting jacks supporting the beam.

3.4 The quasi-static analysis of the restrained stacked configuration uses spectral values corresponding to the lowest stacked natural frequency values from the ground accelerations spectra to calculate the driving horizontal inertia forces. The use of these g-values accounts for possible amplification due to rotations of the HI-TRAC that is essentially cantilevered from the mating device emplaced at the top of HI-STORM. This is a realistic assumption.

3.5 No additional dynamic impact factors are applied in the analyses even though there are small gaps that exist between the HI-STORM and the CTF shell at grade level and between components of the lift platform and the shell extension vertical bars. Even

though appropriate structure will be emplaced to close the gap (CTF-to-HI-STORM) at the top of the CTF, it is expected that slight gaps will remain. These gaps are small, compared to the scale of the structural members; however, during a seismic event, impacts cannot be ruled out. However, we are only interested in the loads arising from the low frequency seismic event in the structural evaluation of the CTF in accordance with ASME Section III, Subsection NF; we neglect any impact effects, which are by their nature, high frequency, short time occurrences that will not influence the primary state of stress in the structure. This is a realistic assumption.

3.6 The mating device structural analysis is not part of this report. A design input to this report is the bending moment capacity of the mating device under a Level D loading; the analysis demonstrates that with this capacity, no restraints to the transporter or to ground are required at the top of the HI-TRAC transfer cask.

4.0 DESIGN INPUT

4.1 Input Weights (for CTF structure design in Attachment A)

HI-STORM 100SA	270,000 lb.	[5.1, Table 3.2.1])
MPC	90,000 lb.	[5.1, Table 3.2.1])
HI-STAR 100	151,000 lb.	[5.2, Table 3.2.1]
HI-TRAC 125D (no MPC)	142,000 lb.	[5.5] (bounds actual value)
Mating Device	20,000 lb.	[5.4] (bounds actual value)
CTF Lifting Platform and jacks	30,000 lb.	[5.3] (bounds actual value)

4.2 *Input Geometry*

The structural analyses uses the following input for the cask geometry:

Cask	Height	Outer Diameter at Base*	CG Height	Reference
HI-STORM 100SA	217 in.(to lower surface of bottom 2" lidplate); 211 in. to top of overpack body	146.25 in.	118.5 in. (1)	[5.13 and 5.14]
HI-STAR 100	203.125 in.	83.25 in.	101.8 in. (2)	[5.12]
HI-TRAC 125D	196.75 in.	93.0 in.	95 in. (1)	[5.5, Sheet 3]

(1) per Table 3.2.3 in [5.1] (2) per Table 3.2.3 in [5.2]

* The diameters shown are the contact diameter with the CTF platform. The cylindrical diameter of the HI-STORM above the base is approximately 132.5". The cylindrical diameter of HI-STAR is 96", and the cylindrical diameter of HI-TRAC is 93" (except there is a 104" diameter bottom flange – see Dwg. 3438).

Drawing 3405 [5.3] provides the input geometry of the CTF structural members that is used in calculations. The manufacturer provided the information in Attachment B used in the analysis of the lifting screw jacks (Item 13). Drawings [5.4] and [5.5] provide the input geometry of the mating device and the HI-TRAC 125D transfer cask.

4.3 Input Material Properties

The analyses use the following mechanical properties of the SA-516-Grade 70 structural steel from ASME Code [5.8] (@ 150 degrees (design temperature per Section 2.3.3.1 B(viii) of FSAR)

- Yield Strength 36.35 ksi
- Ultimate Strength 70 ksi
- Young's modulus 29,100 ksi

ASME Code [5.8] specified the following strength properties for the SA 36 steel bars:

- Yield Strength 36 ksi
- Ultimate Strength 58 ksi

Attachment B gives detailed information about the Joyce lifting screw jacks that is provided by the manufacturer. The following are the input material properties of the lifting jacks (Item 13):

- Yield Strength 77 ksi
- Ultimate Strength 91 ksi

The manufacturer's catalog (see Attachment B) provided the following lower bound values for the material properties of the WELDOX 130 steel plates:

- Yield Strength 120 ksi
- Ultimate Strength 123 ksi

Per Reference [5.16], the calculations of the sliding stability use a conservatively low value of 0.25 for the friction coefficient at the steel-to-steel interfaces.

4.4 Input Loads

Section 6.2.1.1 of Specification [5.10], specifies a design wind loading with the following characteristics:

- Wind velocity 80 miles/hour
- Gust factor 1.1
- Exposure class C

The seismic inputs for the dynamic analyses are obtained from ground acceleration response spectra that have been provided to Holtec. Appendix A of Specification [5.10] provides the spectra for the specified DE, HE, and LTSP design earthquakes. The magnitude of the DDE seismic excitation is twice the DE values. Vertical seismic coefficients are selected that use the ZPA values from the ground acceleration spectra, because the high stiffness of the CTF structure, the surrounding concrete and the stacked casks. The actual spectral values from the ground accelerations spectra (at the lowest natural frequency of the stacked system) are selected for the horizontal seismic coefficients to account for possible amplification due to rotations of the restrained cask stack. It is shown in Attachment E that only a single natural frequency lies below 33 Hz. The following damping ratio curves of the design earthquakes spectra were used for selection of the horizontal seismic coefficients (see Assumption 3.4):

Earthquake	DE	DDE	HE	LTSP
% Critical Damping	2	2	7	5

The analysis of the CTF seismic response in Attachment C, demonstrate that the seismic loads from the LTSP earthquake are the most critical for the CTF structural capacity under Level D stress conditions. In accordance with Section 6.2.55 V of Specification [5.10], the Newmark 100-40-40 Method is used to combine the three specified directions of the LTSP seismic load; when combining the DE and DDE earthquake loads, 100% of one horizontal component earthquake components is considered.

The quasi-static analysis uses the following seismic coefficients to evaluate the inertia loads during DE and LTSP earthquakes (based on the analysis in Attachment E):

Earthquake	**Seismic Coefficient**		
	Horizontal # 1	Horizontal # 2	Vertical
DE	0.225	0	0.1335
LTSP	1.120	1.120	0.725

Note that the seismic accelerations are selected at horizontal frequency 19.851 Hz. Vertical accelerations are selected at frequency 65.7 Hz..

The quasi-static analysis of the structural response under DE seismic loads considers two combinations of the earthquake directions:

1. Upward vertical inertia (Ax + Ay +Az)

2. Downward vertical inertia (Ax + Ay - Az)

Ax and Ay are the horizontal seismic coefficients, and Az is the vertical seismic coefficient (the negative sign indicates downward vertical inertia.

Per calculations in Attachment C, the analysis considers the following limiting combinations of the LTSP earthquake directions:

3. Maximum horizontal inertia with upward vertical inertia (0.4 Az + Ax + 0.4 Ay)

4. Maximum horizontal inertia with downward vertical inertia (-0.4 Az + Ax + 0.4 Ay)

5. Maximum downward vertical inertia (-Az + 0.4 Ax + 0.4 Ay)

5.0 REFERENCE DOCUMENTS AND COMPUTER FILES

5.1 References

[5.1] Holtec Report HI-2002444, HI-STORM FSAR, Chapter 3, Proposed Revision 1.

[5.2] Holtec Report HI-2012610, HI-STAR 100 FSAR, Chapter 3, Revision 0.

[5.3] Holtec Drawing 3405, Diablo Canyon HI-STORM Cask Transfer Facility, Revision 0.

[5.4] Holtec Drawing 3437, Mating Device, Revision 4.

[5.5] Holtec Drawing 3438, HI-TRAC 125D Version CGS Assembly, Revision 4.

[5.6] ANSI N14.6-1993, "American National Standard for Special Lifting Devices for Shipping Containers Weighing 10000 Pounds (4500 kg) or More for Nuclear Materials," American National Standards Institute, Inc.

[5.7] ASME Boiler & Pressure Vessel Code, Section III, Division 1-Subsection NF, 1998.

[5.8] ASME Boiler & Pressure Vessel Code, Section II, Part D, 1998.

[5.9] ASME Boiler & Pressure Vessel Code, Section III, Division 1-Appendices, 1998.

[5.10] Specification 10012-N-NPG, Section 6, Site Specific Conditions and Requirements, Edition 10/03/00.

[5.11] ASCE 7-88, Minimum Design Loads for Buildings and Other Structures, American Society of Civil Engineers, December 1988.

[5.12] Holtec Drawing 1763, HI-STAR 100 Assembly, Revision 4.

[5.13] Holtec Drawing 3068, Cross-section Z-Z of HI-STORM 100S, Revision 0.

[5.14] Holtec Drawing 3570, Cask Anchor Stud and Sector Lug Arrangement, , Revision 2.

[5.15] Holtec Report HI-2012618, Seismic Analysis of Anchored HI-STORM 100 Casks at Diablo Canyon ISFSI. Revision 5.

[5.16] Rothbart, H., Mechanical Design and Systems Handbook, 2nd Edition, McGraw-Hill, Section 6.

[5.17] Strength of Materials, Timoshenko, 3rd Edition. D. Van Nostrand Co., Section 17.

[5.18] MATHCAD 2000 (Professional), Mathsoft, Inc.; MS WORD 2000, Microsoft

[5.19] Pressure Component Construction (Design and Materials Application), J.F. Harvey, VNR, 1980.

[5.20] Mechanics of Materials, Timoshenko and Gere, 2nd Edition, CBS Publishers and Distribution,1984.

[5.21] ANSYS Version 5.6.2, 5.7, ANSYS INC.

[5.22] Holtec Report HI-2012768, Transporter Stability on Diablo Canyon Dry Storage Travel Paths, Rev. 2.

5.2 Computer Codes and Computer Files

The main section of this report is written using Microsoft Word (Office 2000). MATHCAD 2000 electronic calculation code [5.18] serves as a platform for the calculations and the preparation of Attachments A and C. All relevant computer files associated with this calculation package are archived on the Holtec Server in directory (Note that drive letters may be changed over time as different storage comes on line; however, the file paths are preserved).

G:\projects\1073\ais\reports\hi2012626\rev3 (affected files for Rev 4 are stored in rev4 subdirectory):

Finite element files for Attachments D and E are in subdirectories. (Ansys 5.6.2 on Windows OS)

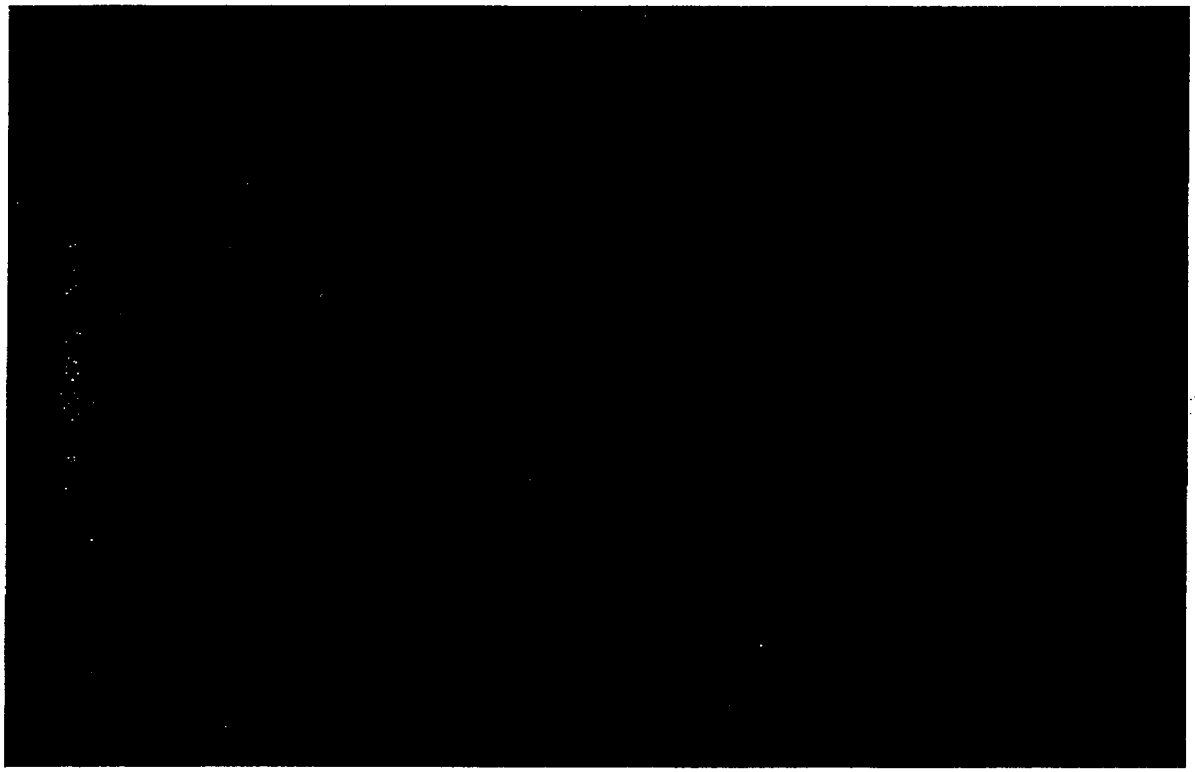

FEA subdirectory for attach D analysis

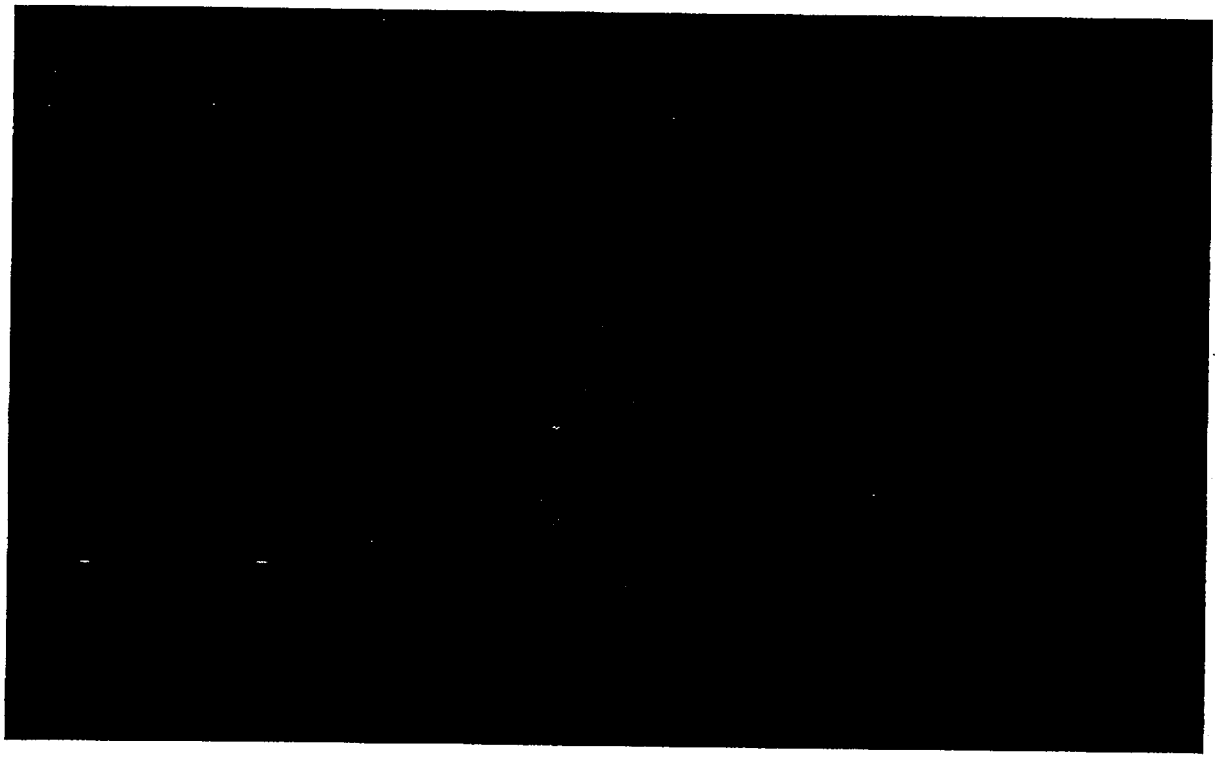

FEA subdirectory for frequency analysis

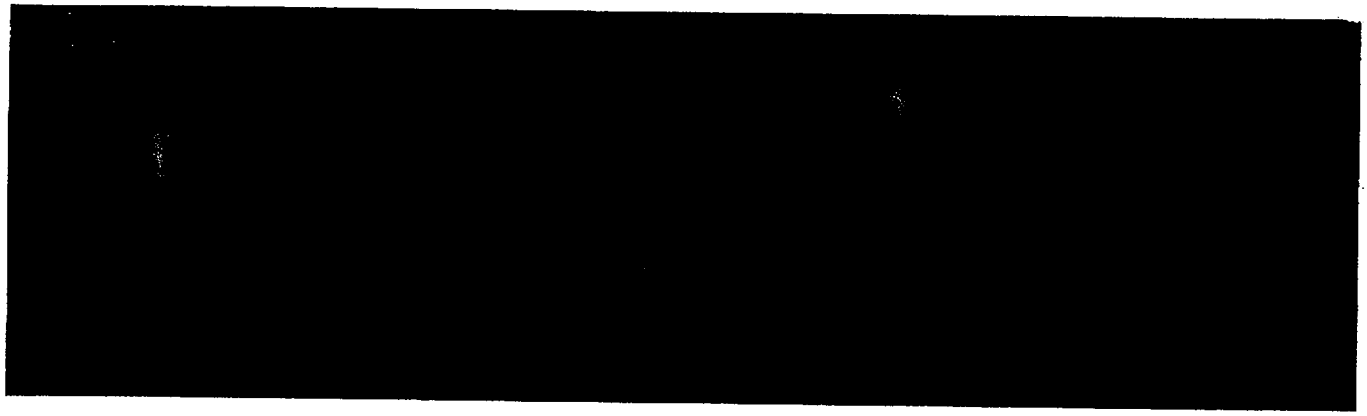

Revision 5 is issued to respond to questions by the PE. These questions required us to update the text and Attachment A. A new Rev 5 subdirectory contains the changed files (although if Attachment C is revised then both files need to be placed in the rev 3 subfolder to ensure that links are updated in Attachment A. (see the readme file)

[redacted]

For Revision 6, all changed files are located in a subdirectory entitled Rev 6 in G:\projects\1073\ais\reports\hi2012626. The FE analysis files (using ANSYS 5.7) for the revision to Attachment E are in the "zip" file located in the subdirectory.

For Revision 7, a subdirectory "Rev 7" contains this updated MS Word Document and the revised Attachment C.

[redacted]

6.0 CALCULATIONS

Attachment A presents the calculations related to the structural analyses of the Diablo Canyon CTF. Attachment C presents the supporting calculations to determine the most critical combinations of directions of the Level D seismic loads. Attachment E contains the calculations that determine the lowest natural frequencies of the stacked system. The inputs, the models, the methodology, and the results are contained within the attachments. The calculations and the text in Attachments A, C and E are prepared using the MATHCAD 2000 electronic calculation code.

The mathematical language used in MATHCAD uses special notation to reflect its internal programming language. For example, some notation used in the various analyses are explained below:

:= means "assignment"

= means a computed result

¦ appearing in the upper right corner of an equation means that this equation is treated as a text block with no calculations performed

x := if(a,b,c) means if a is true, then x=b, otherwise x=c.

For other special notation, the reader needs to consult the MATHCAD help document or the user manual.

7.0 SUMMARY AND CONCLUSIONS

This report provides the necessary calculations to demonstrate that the Cask Transfer Facility (CTF) at the Diablo Canyon Power Plant (DCPP) meets the structural acceptance criteria associated with each of its structural components. The calculations in Attachment A compare calculated values of load/stress with allowable values dictated by the applicable codes and/or standards applied to the design. The loads on the CTF shell and surrounding concrete are evaluated. A summary of the results in tabular form to demonstrate the safety factors implicit in the structure is provided in Attachment A.

7.1 Loads on the Restraints and Surrounding Concrete

Section A.11.1 summarizes the magnitudes, calculated in Attachment A, of the loads applied on the restraints and the concrete surrounding the CTF structure. The design magnitudes of the loads on the mating device and the HI-TRAC restraints are summarized in Section A.11.2 of Attachment A.

7.2 Safety Factors for CTF Structural Components

Section A.11.3 lists the minimum safety factors for the structural components and welds obtained as result of the CTF structural capacity evaluation in Attachment A. The safety factors, all greater than 1.0, demonstrate that the structural component or weld has additional margin above and beyond that required by the particular design requirements. It is concluded from the results that the CTF meets all structural code limits set forth by the governing documents.

8.0 FIGURES

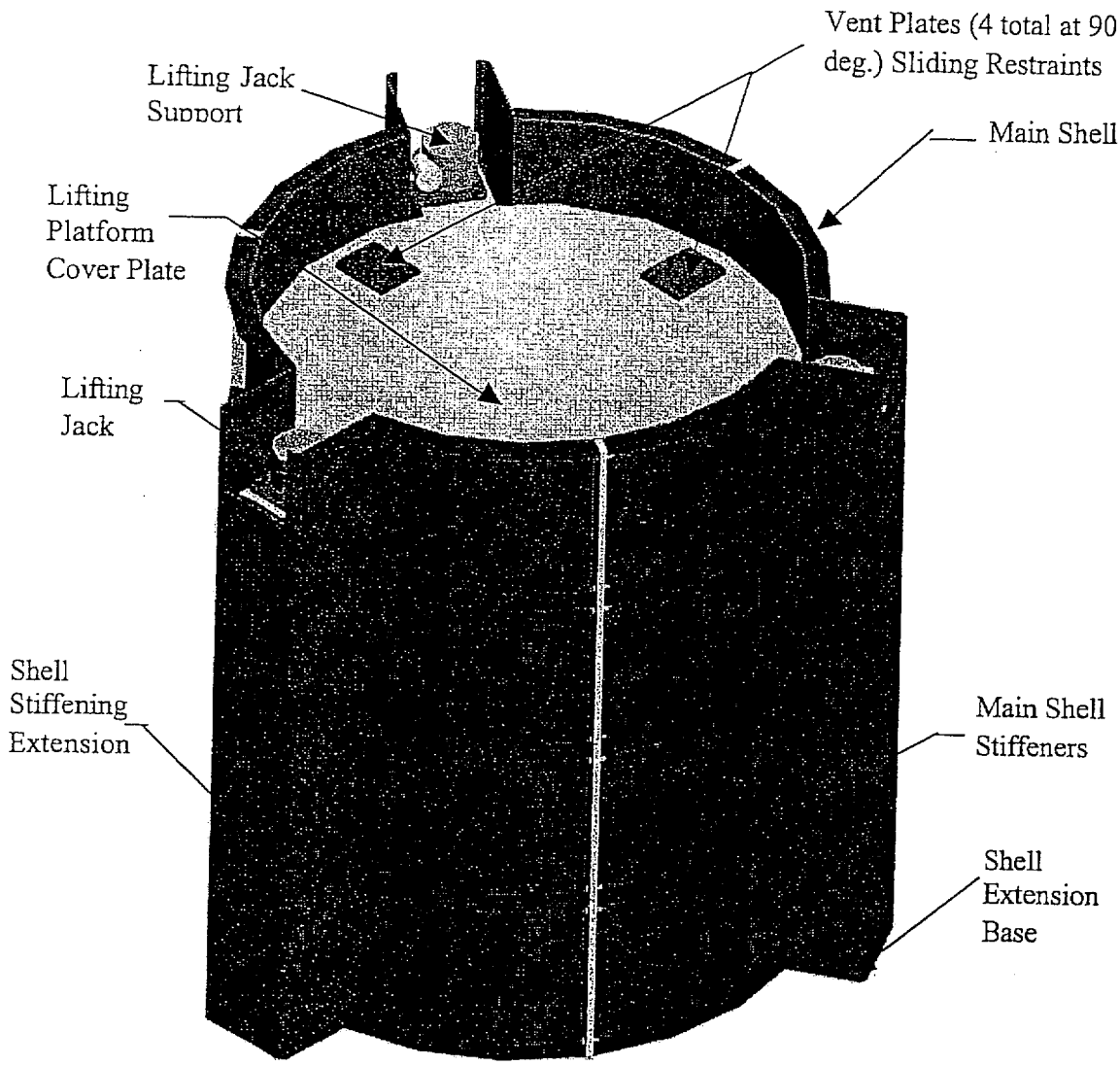

FIGURE 8.1: CASK TRANSFER FACILITY GENERAL LAYOUT

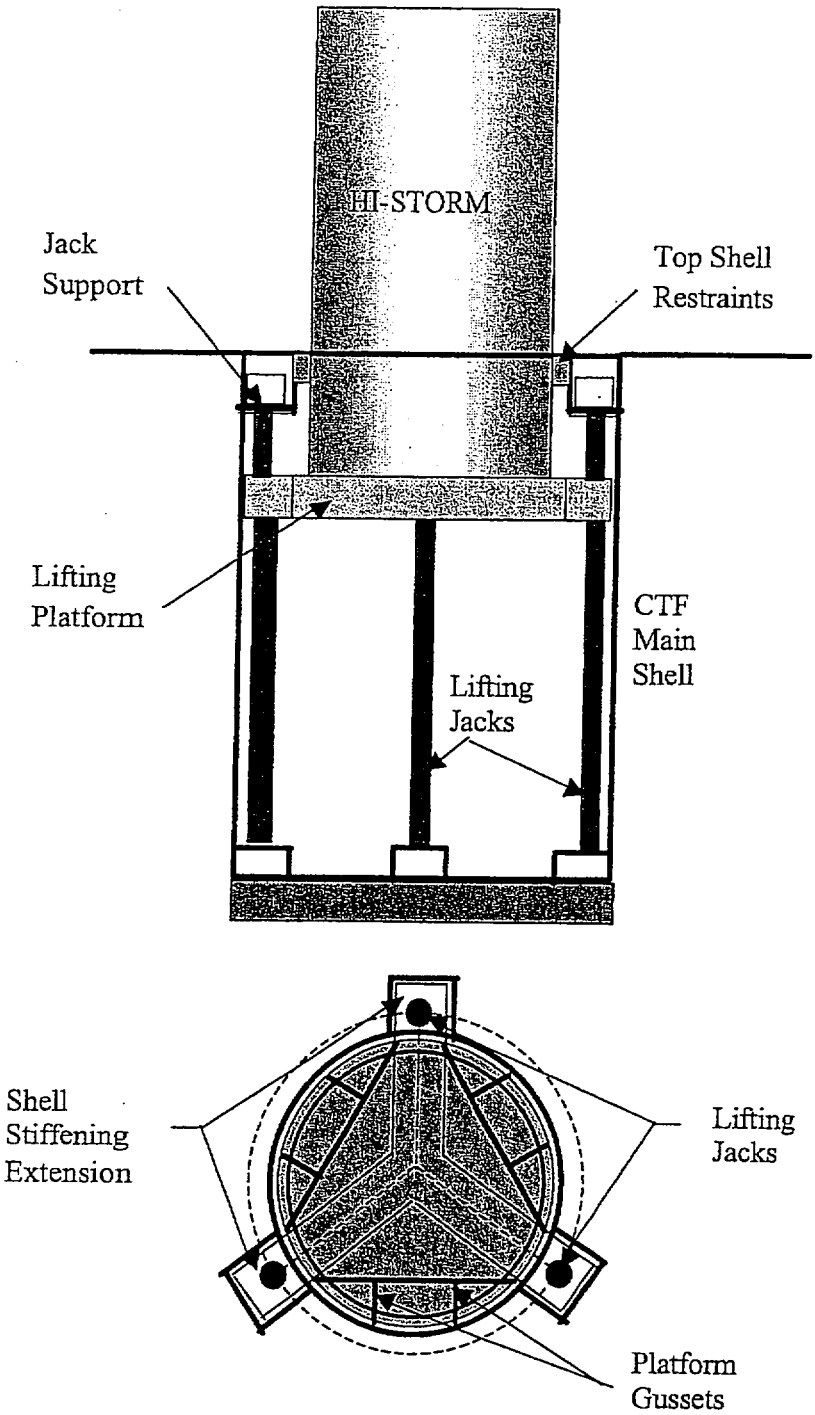

FIGURE 8.2: CTF IN FULL UP POSITION (HI-STORM LIFTED)

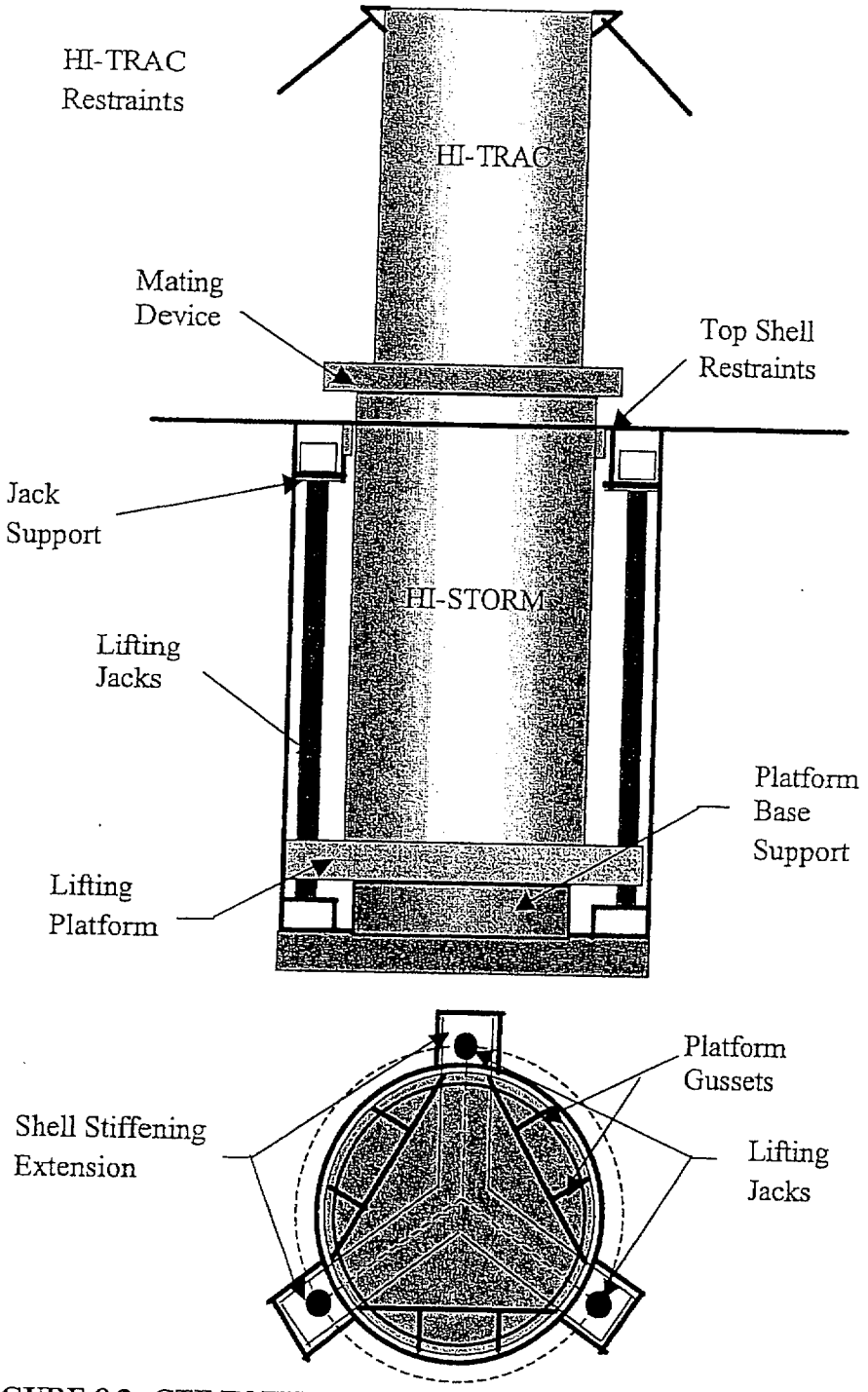

FIGURE 8.3: CTF IN FULL DOWN POSITION WITH CASK STACK

ATTACHMENT A

[HOLTEC PROPRIETARY]

Attachment B

facsimile message

To: LUBEN TODOROVSKY Dept: ENGINEERING
Company: HOLTEC INTERNATIONAL, MARLTON Date: 2/6/01
From: Tom Sell

Sell Industrial, 14 S. Bryn Mawr Ave., Bryn Mawr, PA 19010
Linear Motion Components

Number of pages (including this page) THREE
We are transmitting from FAX (610) 525-6646
If you have any questions, please PHONE (610) 525-6606

Dear Luben:

According to Joyce Application Engineering, the ultimate strength of the steel we use on the 150 ton rated lifting screw is 91,000 psi and the yield strength is 77,000 psi.

Please see the following analysis produced from our proprietary softwear program "JAX". Steve Agace, I know, has a copy of this program and I would be happy to provide you with one as well.

Please call me if you have any questions.

Regards,

JOYCE®

Detailed Jack Information

2/ 6/01

Jack Model Number: WJ12150-160-INV-T1 KFTN
Qty. **System:**
Description of Jack: 150 Ton capacity* worm gear machine screw jack, 12:1 ratio gearset, inverted configuration, traveling nut (rotating screw) design, T1 (plain) end condition.
Notes:

Selected Jack Data

Screw Diameter:	7 Inches
Screw Pitch (ACME screws only):	1 Inches
Screw Lead:	1 Inches
Gear Ratio:	12
Screw Thread Root Dia.:	6 Inches
Static Load:	300,000 Pounds
Dynamic Load:	142,000 Pounds
Rise:	160 Inches
Linear (Travel) Speed:	1 in/min
Loading Type:	Tension
Unsupported Length:	N/A
Column End Fixity:	N/A
Max. Column Load (to column buckling):	N/A

Performance Details

Input Speed:	12 rpm
Screw Torque (Raising):	84,542.643 in*lb
Screw Torque (Lowering):	38,646.635 in*lb
Input Starting Torque (Raising):	19,058.028 in*lb
Input Starting Torque (Lowering):	10,193.469 in*lb
Input Running Torque (Raising):	13,925.102 in*lb
Input Running Torque (Lowering):	6,365.525 in*lb
Input Running Power (Raising):	2.651 HP
Input Running Power (Lowering):	1.212 HP

Stress & Factors of Safety	**Stress**	safety factor yield **FSy**	safety factor ultimate **FSu**
Screw Stress (ACME screws only):	1.14E+04 lb/in^2	7:1	8:1
Nut Thread Bending Stress (ACME screws only):	4.50E+03 lb/in^2	8:1	20:1
Nut Thread Shear Stress (ACME screws only):	8.36E+02 lb/in^2	21:1	81:1
Input Shaft Torsional Stress:	1.48E+04 lb/in^2	2:1	5:1
Sleeve Cap (Bolt) Tensile Stress (Wormgear jacks only):	4.58E+04 lb/in^2	2:1	3:1
Sleeve Cap (Bolt) Thread Shear Stress (Wormgear jacks only):	1.26E+04 lb/in^2	2:1	4:1
Worm Cap Bolt Stress (Wormgear jacks only):	9.70E+03 lb/in^2	9:1	12:1
Worm Cap Bolt Thread Shear Stress (Wormgear jacks only):	2.36E+03 lb/in^2	20:1	38:1

Misc. Data

Allowable Continous Travel (Wormgear ACME jacks only):	241.41 Inches
Thrust Bearing Travel Life:	4.74E+08 Inches
Input Shaft Bearing Travel Life:	2.21E+06 Inches
Ballnut Travel Life (WB and BB jacks only):	N/A
Allowable Axial Screw Endplay at Capacity (ACME screws only):	0.31 Inches
Allowable Axial Screw Endplay at Load (ACME screws only):	0.31 Inches
Nominal Axial Screw Endplay no Load (ACME screws only):	0.024 Inches

Disclamer:
It is the responsibility of the user to verify the suitability of a jack for their application.
Joyce/Dayton Corp. shall not be liable in any manner whatsoever for the results obtained through the use of the software.

Joyce/Dayton Corp.
P.O. Box 1630
Dayton, OH 45401
(937) 294-6261
(937) 297-7173 fax

NOTES:
*Capacity is maximum rated capacity for the jack, actual capacity limitations may vary with jack loading conditions.
N/A may appear if the data does not apply to the jack that has been selected.

Report HI-2012626

B-2

JOYCE®

System Printout

Jack Model Number: WJ12150-160-Inverted-T1 KFTN
System Number: 6
Notes:

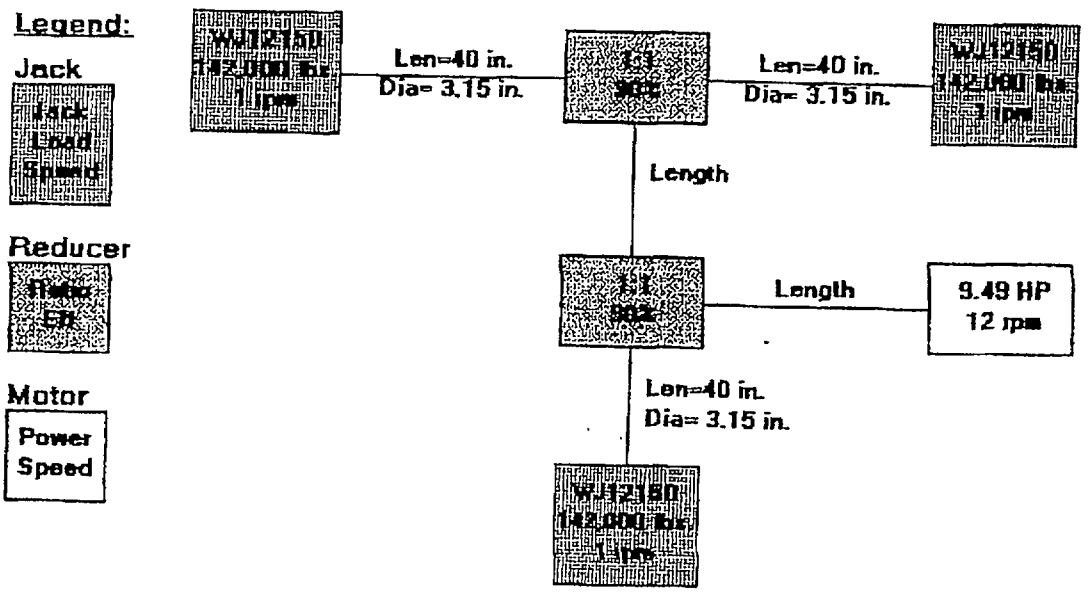

Report HI-2012626

®

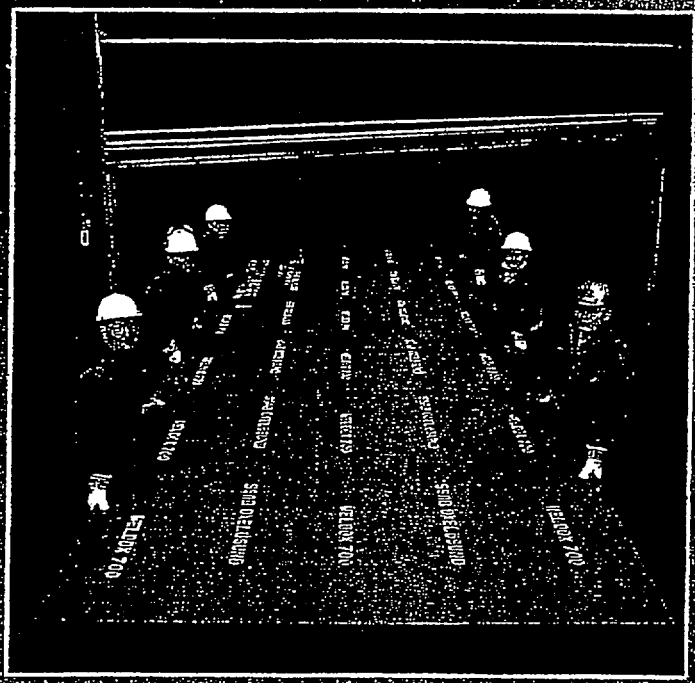

SSAB
OXELÖSUND

HI 20/2626

B-4

General

To ensure good overall performance, all WELDOX steels have low carbon equivalent (CEV) and good toughness. *

All grades produced are characterized by very good flatness and surface quality.

Shotblasting and painting

All WELDOX steels can be shotblasted to surface finish SA 2.5 as per ISO 8501-1 and prime painted. *

Designation	Thickness mm	$R_{p0.2}$ ** min MPa	R_m ** MPa	Other specifications EN	ASTM
WELDOX 100	5/32–2	100	110–130		A 514 S
	(2)–4	94	110–135	10 137-2	
WELDOX 130	5/32–2	130	136–160	10 137-2	
	(2)–3 1/8	120	123–160	10 137-2	
WELDOX 140	5/32–2	140	143–160	10 137-2	
WELDOX 160 [2]	3/16–1 1/2	160	181–225		

*) For further information on the sales program and on shotblasting and painting etc. – see our data sheets and the brochure HARDOX & WELDOX General Information (E-5).

**) $R_{p0.2}$ = Yield strength
R_m = Ultimate tensile strength

1) In some cases, WELDOX steels do not cover the whole of the standard range. For more detailed information, please refer to our data sheets.

2) Product in the course of development. The upper limit of thickness and the requirements have not yet been finalized.

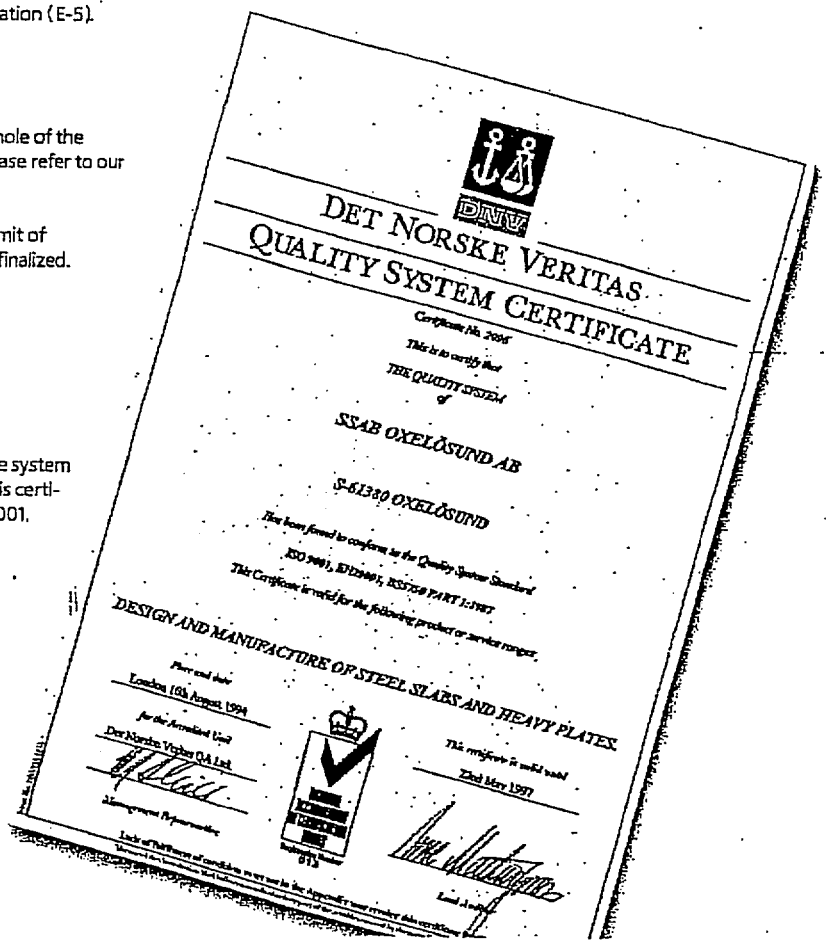
DET NORSKE VERITAS
QUALITY SYSTEM CERTIFICATE
SSAB OXELÖSUND AB
S-61330 OXELÖSUND
DESIGN AND MANUFACTURE OF STEEL SLABS AND HEAVY PLATES

The Quality Assurance system at SSAB Oxelösund is certified to ISO 9001.

HI-2012626

ATTACHMENT C

[HOLTEC PROPRIETARY]

ATTACHMENT D

[HOLTEC PROPRIETARY]

ATTACHMENT E

[HOLTEC PROPRIETARY]

HOLTEC
INTERNATIONAL

Holtec Center, 555 Lincoln Drive West, Marlton, NJ 08053
Telephone (856) 797- 0900
Fax (856) 797 - 0909

ANALYSIS OF TRANSMISSION TOWER COLLAPSE ACCIDENTS AT THE DIABLO CANYON ISFSI PAD AND CTF

FOR

DIABLO CANYON

Holtec Report No: HI-2012634 - NP Rev. 1

Holtec Project No: 1073

Report Class : SAFETY RELATED

NON-PROPRIETARY VERSION

DOCUMENT NAME: Analysis of Transmission Tower Collapse Accidents at the Diablo Canyon ISFSI Pad and CTF

DOCUMENT NO.:	2012634	CATEGORY: ☐ GENERIC
PROJECT NO.:	1073	X PROJECT SPECIFIC

Rev. No.[2]	Date Approved	Author's Initials	VIR #	Rev. No.	Date Approved	Author's Initials	VIR #
0	02/20/01	JZ	101689				
1	03/21/01	JZ	410772				

DOCUMENT CATEGORIZATION

In accordance with the Holtec Quality Assurance Manual and associated Holtec Quality Procedures (HQPs), this document is categorized as a:

X Calculation Package[3] (Per HQP 3.2)

☐ Technical Report (Per HQP 3.2) (Such as a Licensing Report)

Design Criterion Document (Per HQP 3.4)

☐ Design Specification (Per HQP 3.4)

☐ Other (Specify):

DOCUMENT FORMATTING

The formatting of the contents of this document is in accordance with the instructions of HQP 3.2 or 3.4 except as noted below:

DECLARATION OF PROPRIETARY STATUS

This document is labeled:

☒ Nonproprietary ☐ Holtec Proprietary ☐ TOP SECRET

Documents labeled TOP SECRET contain extremely valuable intellectual/commercial property of Holtec International. They cannot be released to external organizations or entities without explicit approval of a company corporate officer. The recipient of Holtec's proprietary or Top Secret document bears full and undivided responsibility to safeguard it against loss or duplication.

Notes

1. This document has been subjected to review, verification and approval process set forth in the Holtec Quality Assurance Procedures Manual. Password controlled signatures of Holtec personnel who participated in the preparation, review and QA validation of this document are saved in the N-drive of the company's network. The Validation Identifier Record (VIR) number is a random number that is generated by the computer after the specific revision of this document has undergone the required review and approval process, and the appropriate Holtec personnel have recorded their password-controlled electronic concurrence to the document.
2. A revision to this document will be ordered by the Project Manager and carried out if any of its contents is materially affected during evolution of this project. The determination as to the need for revision will be made by the Project Manager with input from others as deemed necessary by him.
3. Revisions to Calculation Packages may be made by adding supplements to the document and replacing the "Table of Contents" and the "Revision Log".

TABLE OF CONTENTS

TABLE OF CONTENTS 1

REVISION LOG 3

1.0 INTRODUCTION 4

1.1 PURPOSE AND SCOPE 4

1.2 ABOUT THIS REPORT 5

2.0 METHODOLOGY 8

3.0 ACCEPTANCE CRITERIA 9

4.0 ASSUMPTIONS 10

5.0 INPUT DATA 11

6.0 COMPUTER CODES 13

7.0 ANALYSES 14

8.0 COMPUTER FILES 15

9.0 RESULTS OF ANALYSES 16

10.0 SUMMARY AND CONCLUSIONS 18

11.0 REFERENCES 19

12.0 TABLES 20

TOTAL NUMBER OF TABLES IN THIS DOCUMENT = (0) 20

13.0 FIGURES **21**

TOTAL NUMBER OF FIGURES IN THIS DOCUMENT = (10) 21

Figure 1 Schematics of the Transmission Tower (ANSYS Model) *22*

Figure 2 Tower Collapse at the ISFSI Pad - Finite Element Model (Side View) *23*

Figure 3 Tower Collapse at the ISFSI Pad - Finite Element Model (Plan View) *24*

Figure 4 Tower Collapse at the ISFSI Pad – Deformed Shape (Side View) *25*

Figure 5 Tower Collapse at the ISFSI Pad – Deformed Shape (Local Isometric View) *26*

Figure 6 Tower Collapse at the ISFSI Pad – Impact Force Time History *27*

Figure 7 Tower Collapse at the CFT - Finite Element Model (Side View) *28*

Figure 8 Tower Collapse at the CFT – Deformed Shape (Side View) *29*

Figure 9 Tower Collapse at the CFT – Deformed Shape (Local Isometric View) *30*

Fig. 10 Tower Collapse at the CFT – Impact Force Time History *31*

Appendix A (4 pages)

REVISION LOG

Revision 0 – Original Issue

Revision 1 – Revision 1 incorporates the client's comments dated on March 8, 2001. In particular, tower yield strength was increased and all simulations were rerun.

1.0 INTRODUCTION

1.1 PURPOSE AND SCOPE

The Diablo Canyon Power Plant 500 kV transmission towers located between the power-block and the 500 kV switchyard are typically four-legged latticed type steel structures with bolted connections. A typical tower, type 2HVR, is shown in Figure 1 for illustration. The structural members are almost exclusively single angle sections. Except for full dead-end towers, internal guys are installed to provide resistance in the transverse direction. Tower legs and guys are anchored to reinforced concrete drilled piers.

Two 500 kV transmission towers are located in the vicinity of the Diablo Canyon ISFSI storage pad and Cask Transfer Facility (CTF): Tower 5-1 (Type 3HVL) and tower 5-2 (Type 2HVR). The physical characteristics of the two transmission towers are:

1) Tower 5-1 has a height of approximately 125 ft, measured from the ground to the highest point. It is located, at its nearest foundation, approximately 100 ft west of the ISFSI pad and 60 ft south of the Cask Transfer Facility (CTF). It has a total structural weight of approximately 25 kips.

2) Tower 5-2 has a height of approximately 135 ft, measured from the ground to the highest point. It is located, at its nearest foundation, approximately 60 ft east of the ISFSI pad. Tower 5-2 has a total structural weight of approximately 31 kips.

At extreme wind speeds above 84 mph, the transmission tower may collapse by hinging of the legs and failure of braces without incident of leg or pile foundation pullout or lateral failure, and may subsequently hit the spent fuel storage cask at the ISFSI pad and the CTF [11.1]. The distance of the towers to the ISFSI pad and CTF are subject to any changes in the pad size and layout. However, changes if any are made are not expected to be significant, i.e. the notion of a tower impacting a cask will still stand.

The purpose of this calculation package is to evaluate the consequences of potential tower collapse accidents due to extreme wind load. Based on the orientation of the towers, two bounding tower-collapse scenarios are conservatively identified and analyzed for the governing tower 5-2. Referring to Figure 1, the first tower collapse scenario assumes that the flat side of the horizontal section of the falling tower hits the top of a HI-STORM 100SA cask on the ISFSI pad. The second scenario postulates that the pointed end of the horizontal section of the falling tower hits the top lid of a MPC stored in the HI-STORM overpack located in the underground CTF during the cask transfer operation. It should be pointed out that a loaded HI-TRAC transfer cask is protected from a falling transmission tower by the structure of the cask transporter at all times and is not analyzed here.

Transient finite element analyses are performed for the two postulated tower collapse events. Results of the analyses will demonstrate if the acceptance criteria specified in Ref. [11.1] can be met.

1.2 ABOUT THIS REPORT

In order to gain acceptance as a *safety significant* document in the company's quality assurance system, this document is required to undergo a prescribed review and concurrence process that

requires the preparer and reviewer(s) of the document to answer a long list of questions crafted to ensure that the document has been purged of all errors of any material significance. A record of the review and verification activities is maintained in electronic form within the company's network to enable future retrieval and recapitulation of the programmatic acceptance process leading to the acceptance and release of this document under the company's QA system. Among the numerous requirements that this document must fulfill, as applicable, to muster approval within the company's QA program are:

- The preparer(s) and reviewer(s) are technically qualified to perform their activities per the applicable Holtec Quality Procedure (HQP).
- The input information utilized in the work effort is drawn from referencable sources. Any assumed input data is so identified.
- All significant assumptions are stated.
- The analysis methodology is consistent with the physics of the problem.
- Any computer code and its specific versions used in the work have been formally admitted for use within the company's QA system.
- The format and content of the document is in accordance with the applicable Holtec quality procedure.

- The material content of the report is understandable to a reader with the requisite academic training and experience in the underlying technical disciplines.

Once a safety significant document, such as this report, completes its review and certification cycle, it should be free of any materially significant error and should not require a revision unless its scope of treatment needs to be altered. Except for regulatory interface documents (i.e., those that are submitted to the NRC in support of a license amendment and request), editorial revisions to Holtec *safety significant* documents are not made unless such editorial changes are deemed necessary by the Holtec Project Manager to prevent erroneous conclusions from being inferred by the reader. In other words, the focus in the preparation of this document is to ensure correctness of the technical content rather than the cosmetics of presentation.

2.0 METHODOLOGY

The impact analyses for the postulated transmission tower collapse accidents are performed using the dynamic finite element code LS-DYNA [11.3]. This Holtec QA validated computer code has been used for various spent fuel cask drop and tipover analyses documented in the HI-STORM 100 FSAR [11.5] and has been used for numerous Holtec reracking projects accepted by USNRC.

An energy approach is used to determine the angular velocity of the falling transmission tower immediately before impacting the target as shown in Appendix A. To perform the initial impact angular velocity calculation, the center of gravity and the mass moment of inertia of the governing tower are determined by an ANSYS analysis that is discussed also in Appendix A.

The maximum impact forces obtained from the LS-DYNA analyses are compared with the allowable impact loads documented in a separate design basis evaluation for HI-STORM storage cask and MPC under various tornado missile impacts [11.6].

3.0 ACCEPTANCE CRITERIA

Acceptance criteria for the 500 kV transmission tower collapse accident are provided in Ref. [11.1] and summarized below (italics added by Holtec for clarification):

(a) Impact from a falling tower shall preclude tip-over of a Cask, or damage or loss of function of the Storage Cask anchorage to the pad.

(b) The resultant material stresses, *away from the vicinity of the impact*, in the Cask and Spent Fuel do not exceed allowable values.

(c) There is no loss of shielding function of the Cask, which allows a dose greater than any loss of shielding accident evaluated in the Supplier's SAR.

(d) There is no loss of confinement from a sealed MPC.

(e) There is no loss of retrievability of a spent fuel assembly from the MPC.

4.0 ASSUMPTIONS

1. The falling transmission tower is assumed to rotate about the lowest point of its longest leg; the rotation axis is either parallel or perpendicular to the plane of the tower. This is conservative since the impact energy is maximized by the assumption.

2. The impacted target is assumed to be rigid, which conservatively maximizes the impact force between the fallen tower and the target.

3. The tower is assumed to rotate 90 degrees to impact the target in calculating the initial impact angular velocity. This is conservative, since the actual degree of rotation of the falling tower before hitting a target is smaller than 90 degrees as shown by the configurations of the two assumed accidents in Figs. 2 and 7, respectively.

4. It is assumed that, during a tower collapse accident, the tower legs furthest from the impact target are separated from the foundation thus allowing tower rotation about the nearest legs. This assumption is conservative due to the less rotation resistance developed. In addition, the resisting moment due to the plastic hinging at the nearest tower legs is conservatively neglected.

5. The transmission tower structural steel is conservatively assumed to behave as a bi-linear elastoplastic material in the accidents with a failure strain of 19% [11.7].

5.0 INPUT DATA

Weight of the transmission tower is verified by the ANSYS calculation (Appendix A, total mass = 79.486) to be 31.0 kips approximately estimated in Ref. [11.1]

The dimensions of the transmission tower structural components are obtained from Ref. [11.2]. Dimension of HI-STORM 100SA is obtained from Ref. [11.5].

The following material properties for tower structural steels are used [11.2, 11.8]

Young's Modulus = 2.9×10^7 psi
Yield Stress = 45,000 psi
Failure Stress = 62,000 psi

Center of Gravity (CG) and Mass Moment of Inertia of the Tower (calculated by ANSYS in Appendix A):

CENTROID (in)	MOM. OF INERTIA ABOUT ORIGIN (lbf-in-sec^2)	MOM. OF INERTIA ABOUT CENTROID (lbf-in-sec^2)
XC = -17.038	IXX = 0.2363E+08	IXX = 0.1515E+08
YC = -0.60502E-01	IYY = 0.2973E+08	IYY = 0.2122E+08
ZC = -326.63	IZZ = 0.7595E+07	IZZ = 0.7572E+07
	IXY = -1117.	IXY = -1035.
	IYZ = 714.4	IYZ = 2285.
	IZX = -0.1415E+07	IZX = -0.9726E+06

Initial Impact Angular Velocities of the Tower (calculated in Appendix A):

Tower Collapse at ISFSI: 0.846 radians/sec

Tower Collapse at CTF: 0.563 radians/sec

6.0 COMPUTER CODES

The transmission tower collapse analyses are performed using the Holtec QA validated dynamic finite element code, LS-DYNA , Version 950 [11.3].

This report is written using Microsoft Word (Office 2000). Appendix A is written using the commercial electronic scratchpad code MATHCAD 2000 (Mathsoft, Inc.). The calculation package also uses the QA validated finite element code ANSYS [11.4] in Appendix A.

7.0 ANALYSES

As described in Section 1, two tower-collapse accidents are identified and analyzed in this calculation package: tower collapse at the ISFSI pad and tower collapse at the CTF. The impact target is the HI-STORM 100SA storage cask located on the ISFSI pad for the first event, and, for the second event, the MPC in the HI-STORM overpack located in the underground CTF during the cask transfer operation. Two LS-DYNA finite element models are developed to simulate the postulated tower-collapse accidents based on the structural input information of the governing tower provided in Ref. [11.2]. Figures 2, 3 and 7 show the two models, respectively.

The two tower collapse models are conservatively developed to result in maximum damage to the target. As shown in Figures 2 and 7, the configurations of the impact accidents are established to maximize the impact forces sustained by the targets. In addition, various conservative assumptions are made in Section 4.0 to maximize the impact energy by conservatively estimating the initial impact velocity and neglecting the energy absorption in the target.

Supporting calculations for the development of the two LS-DYNA models are presented in Appendix A. This appendix also evaluates the structural integrity of the target.

8.0 COMPUTER FILES

All relevant computer files associated with this calculation package are archived on the Holtec network server under the following directory:

G:\projects\1073\jz\Tower

This MS-Word and MathCad files of this report are saved under the subdirectory ...\Report; the LS-DYNA files for the two accidents are saved under the subdirectories ...\ISFSI and ...\CTF, respectively.

9.0 RESULTS OF ANALYSES

Figures 4 to 5 show the deformed shape of the transmission tower for the postulated accident at the ISFSI pad. The deformation result indicates that the tower truss components are locally damaged in the collapse accident. The time history of the impact force between the tower and the HI-STORM 100SA spent fuel storage cask is shown in Figure 6. The unfiltered maximum impact force is less than 531.2 kips, which can be converted to an equivalent load of 1.48 g's on the 360-kip cask. The HI-STORM 100SA structure is designed to withstand a 45-g load, and the MPC is designed to withstand a load of 45 g's when it is inside the HI-STORM [11.5]. Therefore, the impact of the force due to the transmission tower collapse is bounded with significant margin and therefore, no loss of the cask shielding function, MPC confinement, and retrievability of spent fuel assembly is postulated. Since the impact force exerted to cask is almost in the vertical direction as shown in Fig. 2, the horizontal component of the impact force is less than 93 kips for an approximate impact angle of 10 degrees from the vertical direction (estimated in Section A.2.1 of Appendix A), which is much smaller than the combined horizontal wind and large tornado missile load (475 kips, Ref. [11.6]). Therefore, the large missile and tornado wind evaluation that demonstrates the cask will not tipover is bounding. In summary, the acceptance requirements set forth in Section 3.0 are met for the postulated tower collapse accident at ISFSI pad, where the tower impacts the HI-STORM.

For the postulated impact between a pointed end of the horizontal section of the transmission tower and the exposed MPC lid, the deformation result is shown in Figures 8 and 9. Similar to the deformation result of the assumed accident at the ISFSI pad, the postulated accident at the CTF also results in local damage to the tower structure. The unfiltered maximum impact force

applied to the MPC lid is less than 499.2 kips, as shown in the impact force time history result in Figure 10. This impact force is much smaller than the allowable impact force for the weld (2,789 kips) determined in the tornado missile analysis [11.6], and thus will not cause a breach of the MPC confinement boundary. The maximum local stress of the MPC lid due to the impact is calculated as 17.09 ksi in Appendix A, which is smaller than the yield stress of the lid material (18.8 ksi). Finally, tipover of the HI-STORM 100SA overpack that houses the impacted MPC is not a concern in this postulated accident, as the overpack is positioned in the underground CTF. In summary, the postulated tower collapse accident at the CTF also meets the acceptance criteria set forth in Section 3.0.

10.0 SUMMARY AND CONCLUSIONS

Analyses of the consequences of two postulated tower collapse accidents at the Diablo Canyon ISFSI pad and CTF have been performed in this calculation package. The unfiltered maximum impact forces obtained from the LS-DYNA finite element analyses are 531.2 kips and 499.2 kips, respectively, for the two events. It has been shown, under the calculated maximum impact forces, the acceptance criteria set forth by Ref. [11.1] are met for both of the postulated tower collapse accidents. In reality, the calculated safety factors are considerably larger than would be indicated by use of the unfiltered results. Following the guidelines in the HI-STORM FSAR, we could filter the forces to remove energy above 350 Hz; this would lower the peak force that is used to compare structural limits.

11.0 REFERENCES

[11.1] Diablo Canyon 500 KV Tower Collapse Evaluation Criteria, Revision 0.

[11.2] SAP Input Data (2hvr-dcpp-1.EKO) for the Governing Tower 2HVR, Dated on 01/12/01 (provided by PG&E).

[11.3] LS-DYNA, Version 950, Livermore Software, 1999.

[11.4] ANSYS, Version 5.6, Swanson Analysis Systems, Inc., 2000.

[11.5] HI-STORM 100 FSAR, Holtec Report HI-2002444, Revision 0, 2000.

[11.6] Design Basis Wind and Tornado Evaluation for DCPP, Holtec Report HI-2002497, Rev. 0, 2000.

[11.7] Atlas of Stress-Strain Curves, H. E. Boyer, ASM International, 1987

[11.8] PG&E drawings No. 442327 and No. 440346.

Note: The revision status of Holtec documents cited above is subject to updates as the project progresses. This document will be revised if a revision to any of the above-referenced Holtec work products materially affects the instructions, results, conclusions or analyses contained in this document. Otherwise, a revision to this document will not be made and the latest revision of the referenced Holtec documents shall be assumed to supersede the revision numbers cited above. The Holtec Project Manager bears the undivided responsibility to ensure that there is no intra-document conflict with respect to the information contained in all Holtec generated documents on a safety significant project.

12.0 TABLES

Total Number of Tables in this Document = (0)

13.0 FIGURES

Total Number of Figures in This Document = (10)

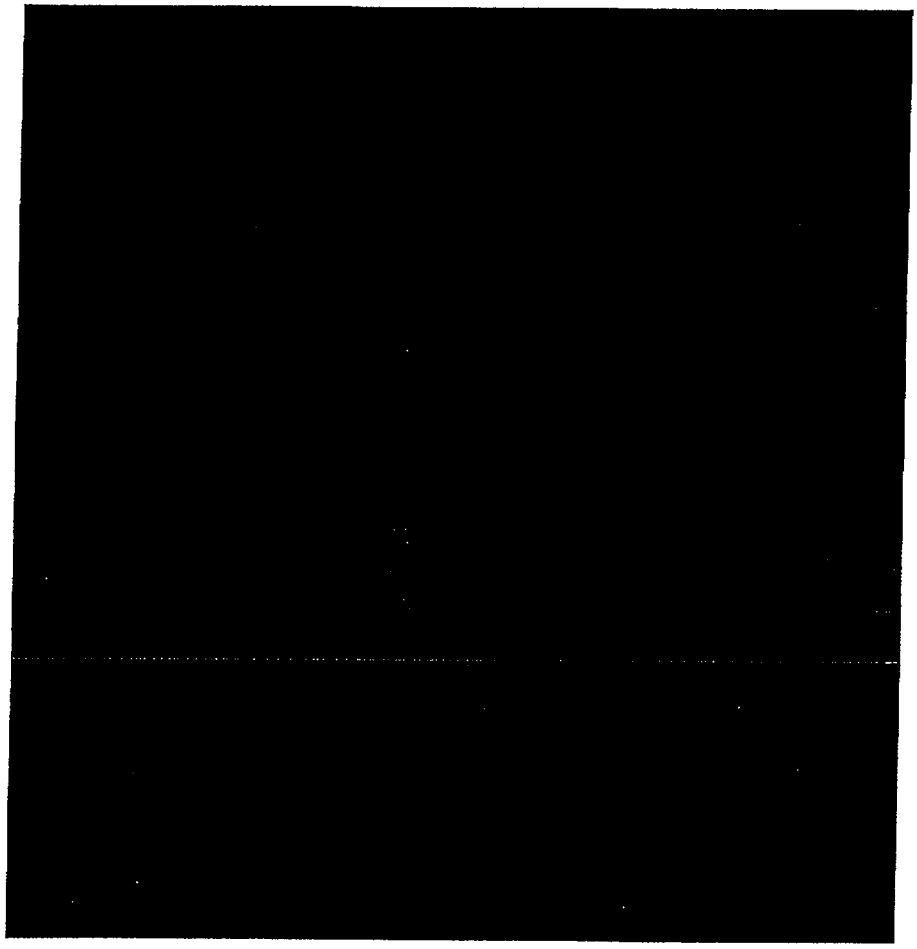

Figure 1 Schematics of the Transmission Tower (ANSYS Model)

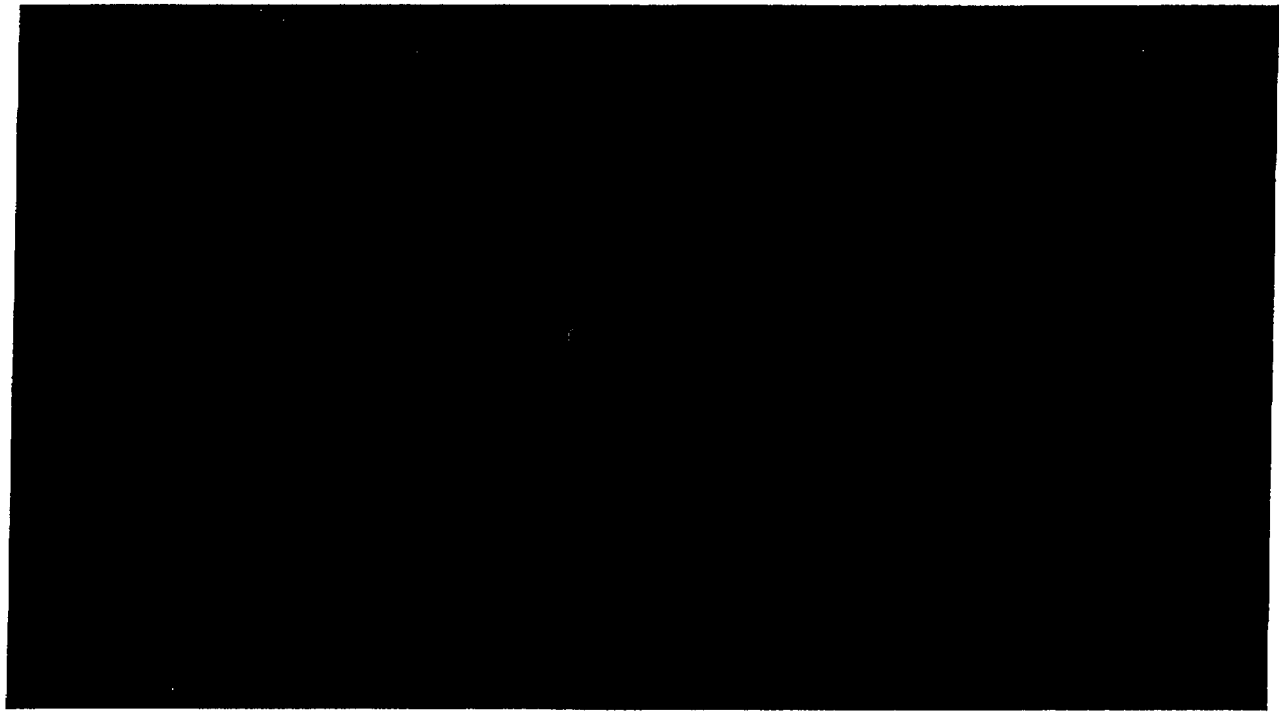

Figure 2 Tower Collapse at the ISFSI Pad - Finite Element Model (Side View)

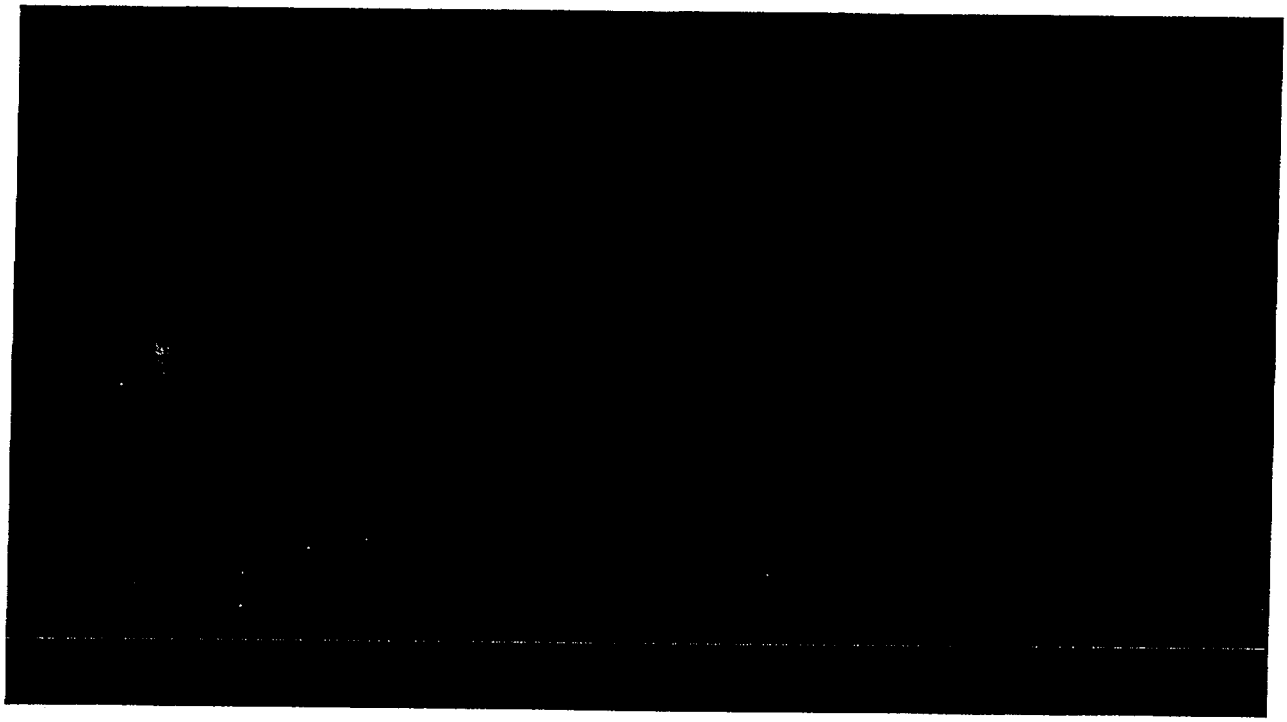

Figure 3 Tower Collapse at the ISFSI Pad - Finite Element Model (Plan View)

Figure 4 Tower Collapse at the ISFSI Pad – Deformed Shape (Side View)

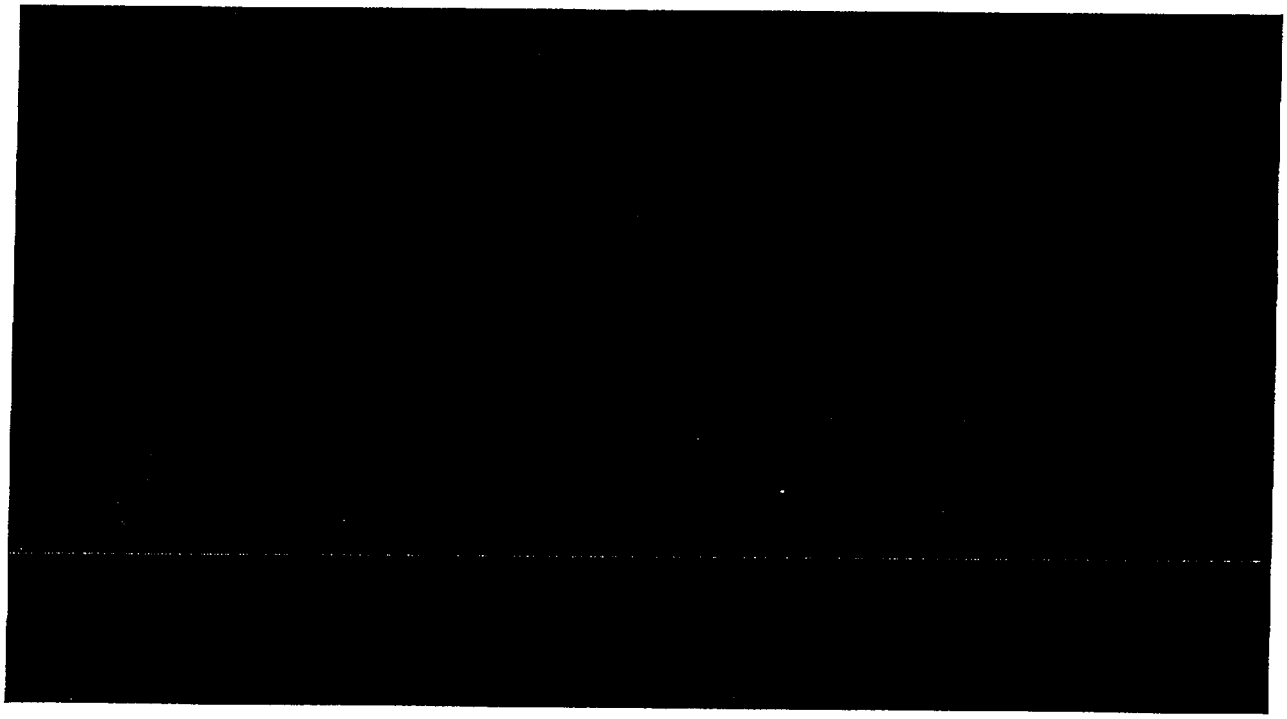

Figure 5 Tower Collapse at the ISFSI Pad – Deformed Shape (Local Isometric View)

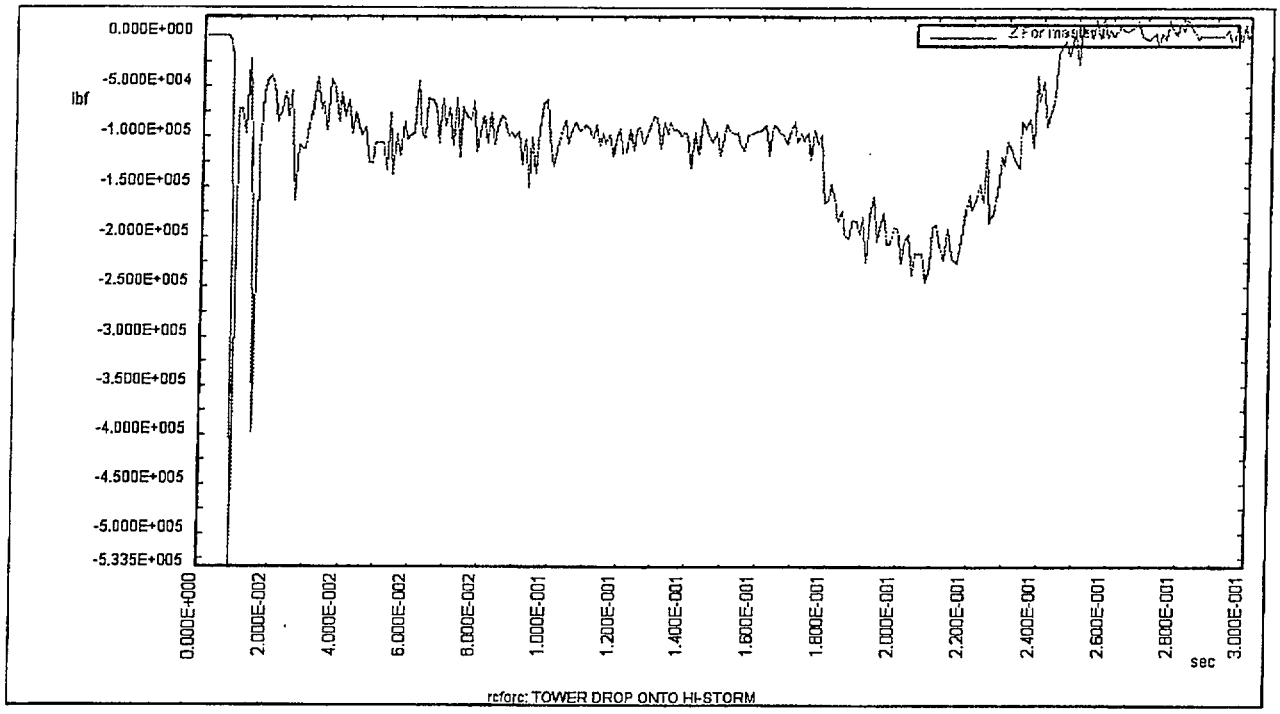

Figure 6 Tower Collapse at the ISFSI Pad – Impact Force Time History

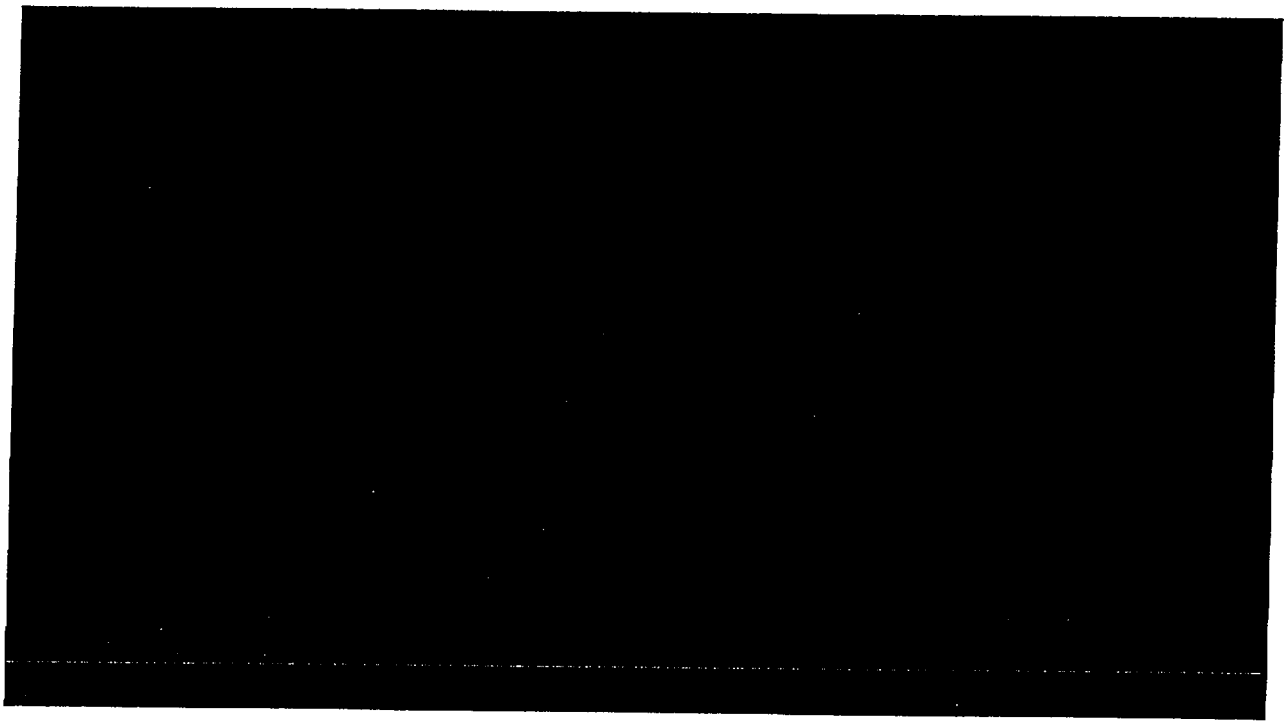

Figure 7 Tower Collapse at the ~~CFT~~ - Finite Element Model (Side View)

CTF

Figure 8 Tower Collapse at the ~~CFT~~ – Deformed Shape (Side View)

CTF

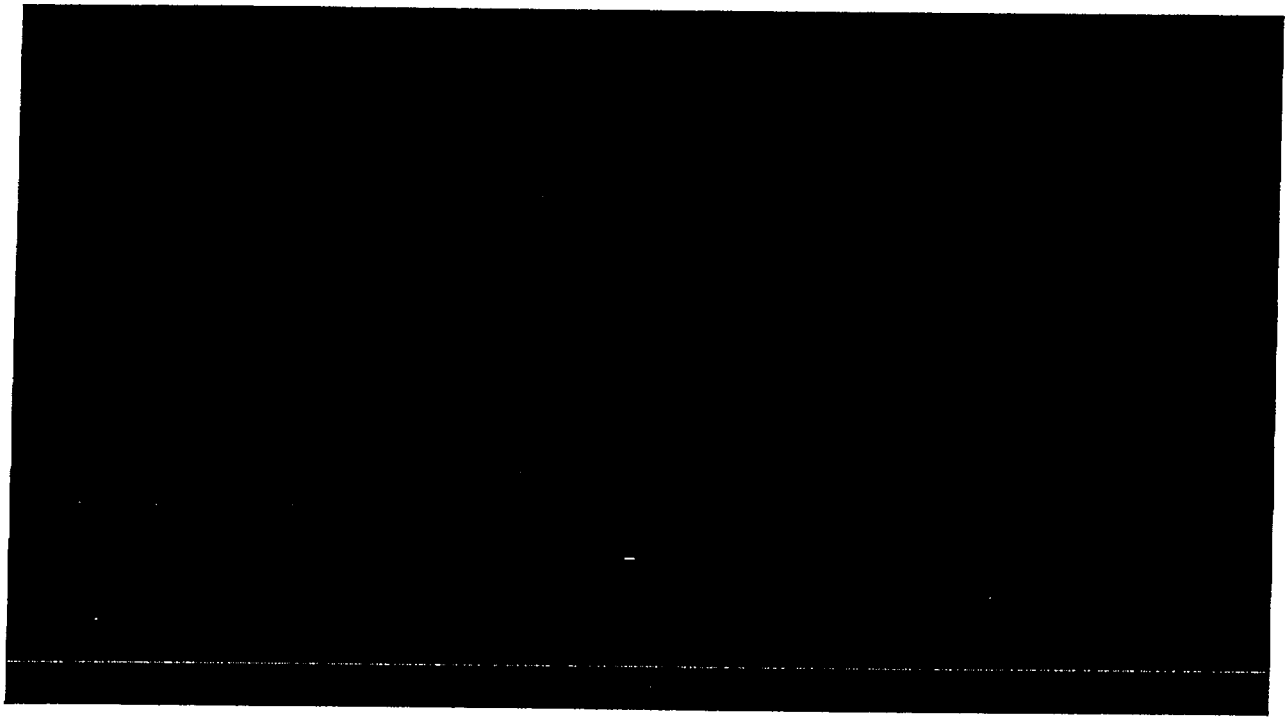

Figure 9 Tower Collapse at the ~~CFT~~ – Deformed Shape (Local Isometric View)
CTE

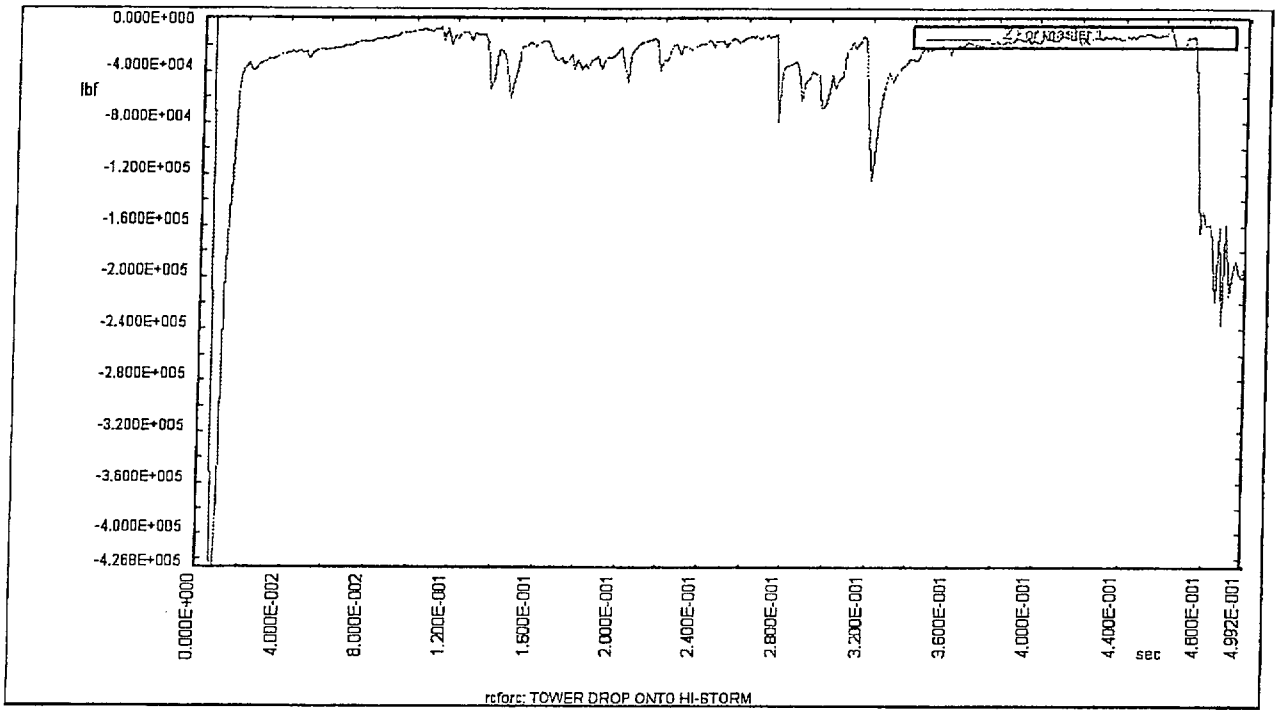

Fig. 10 Tower Collapse at the CFT – Impact Force Time History

CTF

Appendix A Miscellaneous Calculations

This appendix contains miscellaneous calculations to support the analysis of the postulated transmission tower collapse accidents.

A.1 Center of Gravity and Mass Moment of Inertia of the Transmission Tower

To calculate the initial impact angular velocity of a falling tower, the CG and mass momentum of inertia of the tower are needed. To this purpose, an ANSYS model of the governing tower 5-2 is developed by extracting the finite element information from the provided SAP input file [11.2]. The ANSYS model and its coordinate system are shown in Figure 1 of this report. By applying a gravity load to the model, ANSYS can calculate the CG and mass moment of inertia of the tower. The results of this calculation are listed in Section 5.0.

A.2 Initial Impact Angular Velocity

A.2.1 Scenario 1 (Collapse at the ISFSI Pad)

z-coordinate of the rotation point of the longest tower leg $Z_{min} := -1182 \cdot in$ [11.8]

z-coordinate of the CG $Z_C := -326.63 \cdot in$ [Sec. 5]

maximum vertical change of CG (90 degree rotation of the tower) $H_{max} := Z_C - Z_{min}$ $H_{max} = 855.37\,in$

mass moment of inertia about CG $J_{C1} := 0.1515 \cdot 10^8 \cdot lbf \cdot sec^2 \cdot in$ [Sec. 5]

mass of the tower $M_T := 79.4862 \cdot \frac{lbf \cdot sec^2}{in}$ [Sec. 5]

mass moment of inertia about rotation axis can be calculated as follows

$J_1 := J_{C1} + M_T \cdot H_{max}^2$ $J_1 = 7.331 \times 10^7\, lbf \cdot sec^2 \cdot in$

Using the energy approach, the angular velocity of the tower as it begins to hit the target Hi-STORM 100SA overpack is calculated as

$$\omega_{T1} := \sqrt{\frac{2 \cdot M_T \cdot g \cdot H_{max}}{J_1}} \qquad \omega_{T1} = 0.846 \frac{rad}{sec}$$

To calculate the horizontal componet of the impact force apllied to the cask for the assumed tower collapse configuration, the angle between the impact force and the cask axial direction needs to be be calculaed.

Horizontal length between the tower rotation axis and the impact location $L_{T1} := 1302 \cdot in$ [11.8]

Height of HI-STORM 100SA $H_{T1} := 231 \cdot in$ [11.5]

The angle between the impact force and the cask axial direction is

$$Ang_{T1} := atan\left(\frac{H_{T1}}{L_{T1}}\right) \qquad Ang_{T1} = 10.061\ deg$$

A.2.2 Scenario 2 (Collapse at the CTF)

x-coordinate of the rotation point of the longest tower leg $X_{min} := -388.2 \cdot in$ [11.8]

x-coordinate of the CG $X_C := -17.038 \cdot in$ [Sec. 5]

The distance between the CG and the rotation axis is

$$D_C := \sqrt{(X_C - X_{min})^2 + (Z_C - Z_{min})^2} \qquad D_C = 932.426\ in$$

mass moment of inertia about CG $J_{C2} := 0.2122 \cdot 10^8 \cdot lbf \cdot sec^2 \cdot in$ [Sec. 5]

mass moment of inertia about rotation axis can be calculated as follows

$$J_2 := J_{C2} + M_T \cdot D_C^2 \qquad J_2 = 9.033 \times 10^7\ lbf \cdot sec^2 \cdot in$$

maximum vertical change of CG (for 90 degree rotation of the tower, per the conservative assumption 3 in Section 4.0) $H_{max2} := H_{max} + X_{min}$ $H_{max2} = 467.17\,in$

A more accurate calculation of the maximum vertical chnage of CG is performed below

The CG position at impact $H_{min} := (522 - 17.038)\cdot in$ [11.8] $H_{min} = 504.962\,in$

$H_{max2} := D_C - H_{min}$ $H_{max2} = 427.464\,in$

For conservatisim, use the biggest H_{max2} in the angular velocity calculation

$$H_{max2} := 467.17\cdot in$$

Using the energy approach, the angular velocity of the tower as it begins to hit the target at the CFT is calculated as

$$\omega_{T2} := \sqrt{\frac{2\cdot M_T\cdot g\cdot H_{max2}}{J_2}} \qquad \omega_{T2} = 0.563\,\frac{rad}{sec}$$

A.3 MPC Lid Stress

The MPC lid is stressed under the impact force in the tower collapse accident at the CTF. The following stress calculation evaluates the structure integrity of the MPC lid.

maximum impact force $P_{MPC} := 4.992\cdot 10^5\cdot lbf$ [Fig.10]

This impact force is much smaller than the impact force to shear off the MPC lid weld (2789 kips, ref. [11.6]). Therefore, the MPC confinement can be maintained in the postulated accident. To calculate the stress in the MPC lid, the pointed horizontal end of the tower is assumed to hit the center of the MPC lid, and the contact area is conservatively assumed to be a circular area with a radius of 0.5 inches.

assumed contact radius $c := 0.5\cdot in$

impact pressure $p_c := \frac{P_{MPC}}{\pi\cdot c^2}$ $p_c = 6.356\times 10^5\,psi$

thickness of MPC lid $T_{mpclid} := 9.5\cdot in$ [11.5]

radius of MPC lid $R_{mpclid} := 33.625 \cdot in$ [11.5]

Poisson ratio of lid material $\nu := 0.3$

Deleted Text (Proprietary)

This stress is less than the yield stress of the MPC lid material (18.8 ksi, Ref. [11.5] and therefore acceptable.

HOLTEC
INTERNATIONAL

Holtec Center, 555 Lincoln Drive West, Marlton, NJ 08053
Telephone (856) 797- 0900
Fax (856) 797 - 0909

DOSE EVALUATION FOR THE ISFSI AT DIABLO CANYON POWER STATION

FOR

Pacific Gas and Electric Company

Holtec Report No: HI-2002563

Holtec Project No: 1073

Report Class : SAFETY RELATED

HOLTEC INTERNATIONAL

DOCUMENT ISSUANCE AND REVISION STATUS[1]

DOCUMENT NAME: Dose Evaluation for the ISFSI at Diablo Canyon Power Station

DOCUMENT NO.:	HI-2002563	CATEGORY: ☐ GENERIC	
PROJECT NO.:	1073	☒ PROJECT SPECIFIC	

Rev. No.[2]	Date Approved	Author's Initials	VIR #	Rev. No.	Date Approved	Author's Initials	VIR #
0	2/20/01	ERD	683951	3	9/28/01	ERD	223887
1	3/22/01	ERD	193245	4	10/24/01	ERD	163444
2	4/5/01	ERD	637775				

DOCUMENT CATEGORIZATION

In accordance with the Holtec Quality Assurance Manual and associated Holtec Quality Procedures (HQPs), this document is categorized as a:

☒ Calculation Package[3] (Per HQP 3.2)

☐ Technical Report (Per HQP 3.2) (Such as a Licensing Report)

☐ Design Criterion Document (Per HQP 3.4)

☐ Design Specification (Per HQP 3.4)

☐ Other (Specify):

DOCUMENT FORMATTING

The formatting of the contents of this document is in accordance with the instructions of HQP 3.2 or 3.4 except as noted below:

DECLARATION OF PROPRIETARY STATUS

☒ Nonproprietary ☐ Holtec Proprietary ☐ TOP SECRET

Documents labeled TOP SECRET contain extremely valuable intellectual/commercial property of Holtec International. They cannot be released to external organizations or entities without explicit approval of a company corporate officer. The recipient of Holtec's proprietary or Top Secret document bears full and undivided responsibility to safeguard it against loss or duplication.

Notes

1. This document has been subjected to review, verification and approval process set forth in the Holtec Quality Assurance Procedures Manual. Password controlled signatures of Holtec personnel who participated in the preparation, review, and QA validation of this document are saved in the N-drive of the company's network. The Validation Identifier Record (VIR) number is a random number that is generated by the computer after the specific revision of this document has undergone the required review and approval process, and the appropriate Holtec personnel have recorded their password-controlled electronic concurrence to the document.
2. A revision to this document will be ordered by the Project Manager and carried out if any of its contents is materially affected during evolution of this project. The determination as to the need for revision will be made by the Project Manager with input from others, as deemed necessary by him.
3. Revisions to this document may be made by adding supplements to the document and replacing the "Table of Contents", this page and the "Revision Log".

Summary of Revisions

Revision 0

Original Issue

Revision 1

1. All changes noted with revision bars.
2. Added Section 1.2 in accordance with Holtec administrative memos. The introduction from Revision 0 has been moved into Section 1.1.
3. Made changes per PG&E comments.
4. A footnote was added to the reference section in accordance with Holtec administrative memos.
5. Four was changed to three in Figure 2 caption.
6. The table of contents was changed appropriately.

Revision 2

1. All changes noted with revision bars. Revision bars from rev 1 have been removed.
2. Fixed an incorrect reference to a section.
3. Removed a paragraph discussing analysis of the dose at the nuisance fence behind and on the sides of the array. This analysis is not contained in the appendices that were referenced.

Revision 3

1. The HI-STORM 100S drawings were updated to include design changes. The significant change from the perspective of this report was the removal of the inner shield shell and the increase in the concrete density of the body to compensate. The lid design was also changed to include the shear bar as part of the lid design. This affected the calculation of the dose from a HI-STORM without a lid. All analyses of the HI-STORM 100S in this report were updated accordingly. In some cases the previous models of the overpacks were used but justification is appropriately provided.
2. Revision bars mark all revisions to text. The following pages of results were completely replaced: A2-A9, D4-D7, E2-E14, F3-F11, G3-G14, H5-H14, I2, K2-K11, L5-L7, M19-M21.

Revision 4

1. Appendix N was added to discuss the determination of the allowable burnup and cooling times for the BPRAs and TPDs.
2. The approved computer code list in Attachment A was updated to show the report number in the footer and the version of the code used.

Table of Contents

1. Introduction 2
   1.1 Statement of Purpose 2
   1.2 About This Document 2
2. General Methodology 4
3. Acceptance Criteria 4
4. Assumptions 5
5. Input Data 7
   5.1 ISFSI Geometry 8
6. Computer Codes 8
7. Analysis and Results 9
   7.1 Source Terms 9
   7.2 MCNP Modeling of the MPC, HI-STORM Overpack, and 125-ton HI-TRAC Transfer Cask 9
   7.3 Method of Tallying 10
   7.4 Choice of Design Basis Burnup and Cooling Time 10
   7.5 Dose Calculations for the HI-STORM 100S on the ISFSI 11
      7.5.1 MCNP Surface Source Calculations 11
      7.5.2 Dose Rates Adjacent to the Overpack 12
      7.5.3 Cask Configurations for Dose Versus Distance Calculations 12
      7.5.4 Final Dose Rate Calculations 14
   7.6 Dose Rates from the HI-STORM 100S Without a Lid 14
   7.7 Dose Rates from the 125-ton HI-TRAC Transfer Cask 15
      7.7.1 Normal Conditions 15
      7.7.2 Accident Conditions 16
   7.8 Doses During Loading and Unloading Operations 17
8. Computer Files 17
9. Summary 23
10. References 28
   10.1 Drawings 29
Appendix A: Bounding Burnup and Cooling Time for HI-STORM A-1
Appendix B: Bounding Burnup and Cooling Time for the 125-ton HI-TRAC B-1
Appendix C: Source Terms C-1
Appendix D: Near Dose Rates for HI-STORM Overpack D-1
Appendix E: Single Cask Dose Rates Versus Distance E-1
Appendix F: Results of Various Overpack Configuration Analyses F-1
Appendix G: Final ISFSI Dose Rate Calculations G-1
Appendix H: Annual Personnel Doses from ISFSI Operations H-1
Appendix I: Dose Rates from a HI-STORM 100S Without a Lid I-1
Appendix J: Dose Rates from the 125-ton HI-TRAC Transfer Cask J-1
Appendix K: Occupational Exposures During Loading and Unloading Operations K-1
Appendix L: Effect of Air Composition on Dose Calculations L-1
Appendix M: Comparison of B&W 15x15 and W 17x17 Assemblies M-1
Appendix N: Allowable Burnup and Cooling Times for BPRAs and TPDs N-1
Attachment A: List of Approved Computer Codes (4 pages)

1. Introduction

1.1 Statement of Purpose

This report documents the radiation shielding analysis that was performed for the Independent Spent Fuel Storage Installation (ISFSI) at Diablo Canyon Power Plant (DCPP). This shielding analysis includes calculation of the dose rates from the HI-STORM 100S overpack on the ISFSI and in the Cask Transfer Facility (CTF), the 125-ton HI-TRAC transfer cask, and the entire ISFSI filled with HI-STORM 100S overpacks. Occupational exposures during loading and unloading operations of a HI-STORM 100S overpack and maintenance and surveillance operations around the ISFSI are estimated in this report. This report also addresses the radiation consequences of a lead slump in the 125-ton HI-TRAC resulting from a drop accident. This report only considers the direct radiation source emanating off the sides and top of the overpack and the sides, top, and bottom of the transfer cask. Since the MPC is seal welded there is no effluent release of radiation. However, the current NRC regulations require the calculation of the off-site dose rate associated with normal, off-normal, and accident effluent release of radiation. These calculations are performed in reference [8] and are summarized in this report in Section 9.

In its fully implemented final configuration, this facility will consist of 140 HI-STORM 100S casks loaded with the MPC-24 or MPC-32. Up to seven ISFSI pads may be constructed with each pad able to store a 4x5 array of casks [12]. At the completion of the ISFSI, the casks would be in a 5x28 configuration. The center to center pitch between HI-STORM casks is 17 feet [12]. The pads will be constructed in such a manner as to maintain the 17 foot pitch between casks on adjacent pads. Dose rates from the cask array are calculated as a function of distance. Distances include relevant onsite and offsite dose locations. For offsite dose rates, the results presented in this report must be added to the dose rates from other Uranium Fuel Cycle operations to determine whether the regulatory requirements for normal (10CFR72.104) conditions are met.

1.2 About This Document

This work product has been labeled a safety-significant document in Holtec's QA System. In order to gain acceptance as a safety-significant document in the company's quality assurance system, this document is required to undergo a prescribed review and concurrence process that requires the preparer and reviewer(s) of the document to answer a long list of questions crafted to ensure that the document has been purged of all errors of any material significance. A record of the review and verification activities is maintained in electronic form within the company's network to enable future retrieval and recapitulation of the programmatic acceptance process leading to the acceptance and release of this document under the company's QA system. Among the numerous requirements that a document of this genre must fulfill to muster approval within the company's QA program are:

- The preparer(s) and reviewer(s) are technically qualified to perform their activities per the applicable Holtec Quality Procedure (HQP).
- The input information utilized in the work effort must be drawn from referencable sources. Any assumed input data is so identified.
- All significant assumptions, as applicable, are stated.
- The analysis methodology, if utilized, is consistent with the physics of the problem.
- Any computer code and its specific versions that may be used in this work has been formally admitted for use within the company's QA system.
- The format and content of the document is in accordance with the applicable Holtec quality procedure.
- The material content of this document is understandable to a reader with the requisite academic training and experience in the underlying technical disciplines.

Once a safety significant document produced under the company's QA System completes its review and certification cycle, it should be free of any materially significant error and should not require a revision unless its scope of treatment needs to be altered. Except for regulatory interface documents (i.e., those that are submitted to the NRC in support of a license amendment and request), revisions to Holtec *safety-significant* documents to amend grammar, to improve diction, or to add trivial calculations are made only if such editorial changes are warranted to prevent erroneous conclusions from being inferred by the reader. In other words, the focus in the preparation of this document is to ensure accuracy of the technical content rather than the cosmetics of presentation.

In accordance with the foregoing, this Calculation Package has been prepared pursuant to the provisions of Holtec Quality Procedures HQP 3.0 and 3.2, which require that all analyses utilized in support of the design of a safety-related or important-to-safety structure, component, or system be fully documented such that the analyses can be reproduced at *any time in the future* by a specialist trained in the discipline(s) involved. HQP 3.2 sets down a rigid format structure for the content and organization of Calculation Packages that are intended to create a document that is complete in terms of the exhaustiveness of content. The Calculation Packages, however, lack the narrational smoothness of a Technical Report, and are not intended to serve as a Technical Report.

Because of its function as a repository of all analyses performed on the subject of its scope, this document will require a revision only if an error is discovered in the computations or the equipment design is modified. Additional analyses in the future may be added as numbered supplements to this Package. Each time a supplement is added or the existing material is revised, the revision status of this Package is advanced to the next number and the Table of Contents is amended. Calculation Packages are Holtec proprietary documents. They are shared with a client only under strict controls on their use and dissemination.

This Calculation Package will be saved as a Permanent Record under the company's QA System.

2. General Methodology

The analysis of the 140 cask ISFSI can be separated into two distinct parts. The first is the generation of the radiation source terms to represent the spent nuclear fuel at the appropriate burnup and cooling time. The second part is the radiation transport simulation to calculate the dose rates near and far from a cask and an array of casks.

The radiation source terms were calculated using the SAS2H and ORIGEN-S modules from the SCALE 4.3 [1,2] code system from Oak Ridge National Laboratory. This is a widely accepted means of generating radiation source terms from spent nuclear fuel.

The radiation transport simulation was performed with MCNP 4A [3] from Los Alamos National Laboratory. This is a state of the art Monte Carlo code that offers coupled neutron-gamma transport using continuous energy cross sections in a full three-dimensional geometry.

The specifics of the radiation source term calculations and radiation transport simulation are discussed below.

3. Acceptance Criteria

The acceptance criteria for offsite dose rates are dictated by 10CFR72.104 and 10CFR72.106 and are summarized below.

Normal condition requirements from 10CFR72.104.

1. During normal operations and anticipated occurrences, the annual dose equivalent to any real individual who is located beyond the controlled area, must not exceed 25 mrem to the whole body, 75 mrem to the thyroid and 25 mrem to any other critical organ.
2. Operational restrictions must be established to meet as low as reasonably achievable (ALARA) objectives for radioactive materials in effluents and direct radiation.

Accident condition requirements from 10CFR72.106

> Any individual located on or beyond the nearest boundary of the controlled area may not receive from any design basis accident the more limiting of a total effective dose equivalent of 5 Rem, or the sum of the deep-dose equivalent and the committed dose equivalent to any individual organ or tissue (other than the lens of the eye) of 50 Rem. The lens dose equivalent shall not exceed 15 Rem and the shallow dose equivalent to skin or to any extremity shall not exceed 50 rem. The minimum distance from the spent fuel or high level radioactive waste handling and storage facilities to the nearest boundary of the controlled area shall be at least 100 meters.

References [4] and [10] and the Diablo Canyon SAR demonstrate that there are no accidents which would significantly affect shielding effectiveness of the HI-STORM. References [4] and [10] further demonstrate that the requirements of 10CFR72.106 are easily met by the HI-STORM

100 system. Therefore, explicit analysis of an accident scenario and demonstration of compliance with 10CFR72.106 was not performed. References [4] and [10] offer further discussion on this topic.

This report demonstrates that the ISFSI meets the above stated acceptance criteria.

For onsite dose rates, the following dose rate limits are used which are consistent with the requirements specified in 10CFR20:

5 rem/year for personnel with dose rate monitors (10CFR20.1201)

0.5 rem/year for personnel without dose rate monitors (10CFR20.1201 and 1502)

2 mrem in any one hour and 100 mrem/year for individual members of the public (10CFR20.1301)

This report demonstrates that the ISFSI is capable of meeting the above stated acceptance criteria. Compliance with 10CFR20 will be demonstrated by personnel dose monitoring in accordance with the DCPP Health Physics Program.

4. Assumptions

The following assumptions are used in this analysis:

1. It is assumed that the occupancy factor for the closest resident beyond the site boundary is 8760 hr, which is full occupancy for the entire year.
2. In compliance with the applicable portions of [9], it is assumed that the occupancy factor for the nearest site boundary, exclusion area boundary and unrestricted area boundary is 2080 hr. This assumption is based on the approach to identify individuals within the geographic location of the ISFSI, and estimate their maximum radiological exposure. The area directly outside the unrestricted area boundary is uninhabited. As a bounding approach, it is estimated that the individual with the maximum exposure would be an individual working outside the boundary for the entire year. The occupancy is then calculated based on a working week of 40 hours and 52 weeks/year.
3. It is assumed that the occupancy factor for the occupational dose rate is 2080 hr, which is based on a working week of 40 hours and 52 weeks/year.
4. It is assumed that the occupancy time for individual members of the public is administratively limited to ensure compliance with the dose rate limitation of 100 mrem/year specified by 10CFR20. Therefore, only compliance with the 2 mrem in any one hour limitation is evaluated for members of the public in this report. Compliance is demonstrated by showing that the dose rate is less than 2 mrem/hr.
5. All PWR fuel assemblies are assumed to be B&W 15x15. This is the design basis fuel assembly from reference [4]. This assembly type has a higher source term than all 17x17 assembly types used at DCPP, as demonstrated in [4]. Additional discussion on this assumption is provided in Appendix M.

6. The analyses account for the increase in cooling time of the fuel in each cask over the years of operation of the facility. Cooling times are calculated based on the assumption that 8 casks are placed into the ISFSI per year. It is assumed in the analysis that each pad is completely filled before the next pad is put into use. It is also assumed that the casks with the youngest fuel are placed closest to the front of the ISFSI and therefore the highest dose rate contribution is calculated. At a rate of eight casks per year, it will take 17.5 years to fill the ISFSI to capacity for a total minimum cooling time after core discharge of 22.5 years for the first casks deployed. However, the oldest fuel in the casks in the ISFSI was conservatively assumed to be 20 years old. No credit was taken for additional cooling from 20-22.5 years. Note that this approach also conservatively assumes that all fuel is loaded in the HI-STORM 100 System casks at 5 years' cooling time - the shortest cooling time allowed by the Technical Specifications. The distribution of cooling times within the ISFSI is shown in Figure 1.
7. It is assumed that the facility is filled to its maximum capacity in each phase, and that all HI-STORM casks are loaded with the MPC-32 with fuel of 32,500 MWD/MTU burnup, 2.9 wt% initial enrichment, and 5 year cooling time at the time of loading. This burnup and cooling time was chosen based on a comparison of the dose rates for different burnup and cooling times. It is demonstrated in Appendix A that this burnup and cooling time in the MPC-32 for the HI-STORM 100S bounds other burnup and cooling times for the MPC-32 and MPC-24 based on the allowable burnup and cooling times.
8. The burnup and cooling time assumed for the 125 ton HI-TRAC analysis is 55,000 MWD/MTU and 12-year cooling. This is based on a comparison of the dose rate for different burnup and cooling times on the side of the 125-ton HI-TRAC loaded with the MPC-24 and MPC-32. Appendix B presents the results of the comparisons and demonstrates that the burnup and cooling time chosen is bounding. The 55,000 MWD/MTU differs slightly from the value of 57,500 MWD/MTU used in reference [10]. The 55,000 MWD/MTU is basically the same value as the allowable for the MPC-24E at 12 year cooling for uniform loading.
9. The enrichment assumed for the 32,500 MWD/MTU was 2.9 wt.% ^{235}U which is consistent with reference [4]. The enrichment used for 55,000 MWD/MTU was 4.0 wt.% ^{235}U which is less than, and more conservative, than the value used in reference [4]. These values were chosen based on a review of the current DCPP fuel inventory provided in [5].
10. The cobalt-59 impurity level was assumed to be 1.0 gm/kg for the hardware above and below the active fuel region and for the grid spacers. This is a conservative value for the cobalt-59 impurity level as modern fuel is manufactured with cobalt impurity levels typically 0.3-0.5 gm/kg or less. Consistent with reference [10], the cobalt-59 impurity level in the steel in the BPRAs was assumed to be 0.8 gm/kg and in the inconel it was assumed to be 4.7 gm/kg.
11. It is conservatively assumed that all in-core grid spacers are non-zircaloy with a cobalt-59 impurity level of 1.0 gm/kg. Some of the fuel assemblies in the core periphery locations at Diablo Canyon use fuel straps which provide additional support for the fuel rods. These fuel straps are inconel and it is assumed that the mass of these straps is 30 gm/each and it is assumed that there are 10 straps per assembly. This results in an additional 300 gm of inconel in the active fuel region in addition to the 4.9 kg assumed for the grid spacers. This is a slightly more than 6% increase in the mass. Since the cobalt-59 impurity level being used for the grid spacers is 1.0 gm/kg, which is more than 20% conservative, the fuel straps are bounded by the grid spacers and therefore are not explicitly analyzed.

12. It is assumed that each fuel assembly in the ISFSI contains a BPRA with stainless steel clad and a cooling time of 13 years at the time of loading. The activation of the BPRA is based on an assembly burnup of 40,000 MWD/MTU and 24 rods per BPRA. These are conservative assumptions based on the current inventory. The current fuel inventory [11] lists only a total of 324 BPRAs, compared to a maximum of up to 4480 assemblies in the ISFSI. On average, the BPRAs have less than 14 rods each. Out of the 324 BPRAs, only 284 have stainless steel clad. The remaining 40 BPRAs have Zr-4 clad which results in lower dose rates. BPRAs have only been used in the first 3 operational cycles of the plants and it is anticipated that there is no further use of BPRAs in the future. At the time the first casks are loaded, the cooling time of the BPRAs will therefore exceed 13 years.
13. The current inventory shows 194 thimble plugs (TPs), and no future use of TPs is anticipated [5]. Typically, TPs have a lower activation than BPRAs, as TPs do not protrude into the active region of the assemblies. Each assembly can only accommodate a BPRA or a TP, but not both. Therefore, the presence of TPs is bounded by the conservative assumption regarding BPRAs (see previous assumption) and no further evaluations are required for TPs.
14. The air density in the dose versus distance calculations was assumed to be 1.17E-03 gm/cc and the air was assumed to be composed of only Nitrogen and Oxygen. Appendix L provides additional discussion on this assumption.
15. Occupancy times and dose rates for surveillance, maintenance and repair of the ISFSI are based on the following assumptions

    - Daily walk-down of the ISFSI to inspect all casks and vent openings. This requires a person to walk the full length of the ISFSI (approximately 493 ft) outside the pads and between the lines of casks on each pad. The individual will walk a maximum of 6 ISFSI lengths. This walk-down would occur once a day every day. For 1 person, the time for this walk is estimated as less than 20 min. This is based on an assumed walking speed of 2 miles/hour, the length of the ISFSI and the number of lines of casks. This results in a total occupancy of 122 hours/year.
    - Repair operations: 1 repair operation per month, 1 hour each repair, 2 persons. This results in a total occupancy of 12 hours/year/person.

    These occupancy times are estimated to demonstrate that the ISFSI can be operated within the requirements specified by 10CFR20 (see Section 3). Compliance with 10CFR20 will be demonstrated by personnel dose monitoring in accordance with the DCPP Health Physics Program. Therefore, these occupancy times do not represent any limitations or requirements.

Other assumptions are stated in the text as necessary. Since the MCNP models used in this report are based on previous HI-STORM analyses, additional assumptions and discussion can be found in references [4], [6], and [10].

5. Input Data

The input data for generating the radiation source terms is provided in references [4] and [10] and can be found in Appendix C. The input data for the MCNP models of the overpack and the MPC, including the density and composition of all materials used in the models is also available

in these references. In addition, input data for the HI-STORM 100S and a discussion of the modeling can be found in reference [15].

5.1 ISFSI Geometry

The ISFSI configuration is specified in [12] and illustrated in Figure 1. The number associated with each cask location in Figure 1 is the minimum cooling time of the fuel in each cask (see Section 4, Assumption 6). There are a maximum of 7 pads being constructed, each of which will hold a 4x5 array of HI-STORM 100S casks. In the final configuration the ISFSI will be a 5x28 array of casks. The center to center pitch for the casks is 17 feet and the pads will be positioned such that the pitch between casks on adjacent pads is maintained at 17 feet. An overpack is 11 feet 1/2 inch in diameter. There will be a security fence and two nuisance fences placed around the ISFSI. The outer nuisance fence will be located to maintain the dose rate below 2 mrem/hr. The ISFSI site is cut into a hill slightly. Only one of the long sides of the ISFSI is on the same level with the surrounding area. This is the front side facing the controlled area boundary. The sides and the back of the ISFSI face the excavated slopes of the hill.

Dose rates are calculated as a function of distance from the cask array. The distances include the following dose locations:

Offsite dose locations:

Nearest resident	1.5 miles / 2414 m	[7]
Unrestricted Area Boundary	1400 ft / 426.7 m	[7]

Onsite dose locations:

Aux. Building Wall	798 ft / 243.2 m	[7]
Make-up water Facility	223 ft / 68.0 m	[7]
Nuisance Fence, Front	100 ft / 31.4 m	assumed

It is conservatively assumed that there are no obstructions (i.e. hills, buildings, earth berms) between the cask array and any of the dose locations.

6. Computer Codes

The computer codes used for these calculations were the following.

1. SAS2H module from SCALE 4.3 - reference [1]
2. ORIGEN-S module from SCALE 4.3 - reference [2]
3. MCNP 4A - references [3] and [6]

7. Analysis and Results

This section of the report describes the calculations that were performed to determine the dose rates for various distances and locations. The basic development of the MCNP models, including source terms and tally normalization, had already been accomplished during the HI-STORM 100 project. This information is appropriately referenced as needed.

7.1 Source Terms

There are three distinct primary radiation source terms that must be accounted for in the analysis of the HI-STORM 100 system. These are:

1. Neutron source from the decay of spent nuclear fuel.
2. Photon source from the decay of spent nuclear fuel.
3. Photons from the decay of Cobalt-60 in the end-fittings of the fuel assemblies. This source represents the activation of the steel components in the fuel assemblies.

These radiation source terms were calculated using the SAS2H and ORIGEN-S modules of SCALE 4.3. A full description of the methodology can be found in reference [4]. The source terms for the 32,500 and 55,000 MWD/MTU design basis fuel can be found in Appendix C.

A secondary source of radiation is from the following:

1. Secondary neutrons from fast fission in the fuel.
2. Secondary photons from prompt neutron interactions in the MPC and overpack.

These secondary sources are automatically accounted for during the MCNP calculation by running a coupled neutron-gamma calculation.

Curies of Cobalt-60 in the BPRAs are also listed in Appendix C. The allowable burnup and cooling times for BPRAs and TPDs are calculated in Appendix N.

7.2 MCNP Modeling of the MPC, HI-STORM Overpack, and 125-ton HI-TRAC Transfer Cask

All MCNP calculations are performed for a HI-STORM 100S loaded with the MPC-24. Results for the HI-STORM loaded with the MPC-32 are obtained from the MPC-24 results through multiplication with the ratio of assemblies in each MPC. This is slightly conservative, as it neglects the increased self shielding within the MPC-32.

The MPC and the overpack were modeled in full three-dimensional detail using MCNP. The description of the modeling process can be found in references [4], [6], and [10].

References [4], [6], and [10] identify a couple of modeling discrepancies between the MCNP model of the overpack and the design basis drawings. These discrepancies are:

1. The steel channels in the cavity between the MPC and overpack were not modeled. This is conservative since it removes steel that would provide a small amount of additional shielding.
2. The bolt anchor blocks were not explicitly modeled. Concrete was used instead. These are small localized items and will not impact dose rates.
3. The exit vents in the overpack were modeled as being inline with the inlet vents. In practice, they are rotated 45 degrees and positioned above the short radial plates. Therefore, this modeling change has the exit vents positioned above the full length radial plates. This modeling change has minimal impact on the dose rates at the exit vents.
4. The short radial plates in the overpack were modeled in MCNP event though they are optional on the drawings.

The MCNP models of the 125-ton HI-TRAC described in References [4], [6], and[10] have been updated to incorporate the latest Engineering Change Orders (ECOs). The only difference between the models used in this analysis and the design of the 125-ton HI-TRAC is the following.

- The pocket trunnions on the 125-ton HI-TRAC transfer cask have been removed.

Section 10.1 provides a listing of the drawings that were used to generate the MCNP models used in this report. In certain calculations, an earlier version of the HI-STORM 100S design was used for some of the MCNP models. This is described in more detail and justified in Section 10.1.

7.3 Method of Tallying

In MCNP, the calculation of a user requested quantity (e.g. dose rate) is referred to as tallying. The tally results calculated in MCNP are normalized per starting particle. Therefore, the MCNP results must be normalized to the actual source strength for the system being analyzed. This normalization is done after the computer runs are completed and is done in EXCEL. The method of the tally normalization is described in reference [6].

7.4 Choice of Design Basis Burnup and Cooling Time

The burnup and cooling times used in this analysis were chosen based on a review of the dose rates from the HI-STORM 100S and the 125-ton HI-TRAC with different burnup and cooling times from the allowable burnup and cooling times. The results indicate that the 32,500 MWD/MTU and 5 year cooling for the MPC-32 bound the allowable burnup and cooling times for both the MPC-24 and MPC-32 for the HI-STORM 100S. The results also indicate that 55,000 MWD/MTU and 12 year cooling for the MPC-24 bound the allowable burnup and cooling times for both the MPC-24 and MPC-32 for the 125-ton HI-TRAC analysis. The results of these comparisons are presented in Appendices A and B for the HI-STORM and HI-TRAC respectively.

The burnup and cooling times analyzed were for uniform loading. Results presented in reference [10] indicate that the dose rates for the HI-TRAC transfer cask from burnup and cooling times taken from the allowable contents for uniform loading bound or are equivalent to the dose rates from burnup and cooling times for regionalized loading. The same conclusions would be true for the HI-STORM cask. Therefore, explicit analysis of the regionalized loading pattern was not performed.

7.5 Dose Calculations for the HI-STORM 100S on the ISFSI

7.5.1 MCNP Surface Source Calculations

MCNP offers the capability to generate a surface source file in one calculation which can then be used in other calculations. The surface source file contains information for particle tracks that cross user designated surfaces. Particles are either neutrons or photons. This method of using a surface source file has a major benefit because the user can generate a surface source file for particles leaving the overpack and then use this file in different runs with different overpack arrangements. The advantage is that, for each overpack arrangement, the user does not have to waste valuable computer time tracking particles out of the overpack since this information is already contained on the surface source file.

Reference [6] describes in detail the use of the surface source file for analysis of the HI-STORM 100 system.

Since there are three separate radiation sources (neutron, gamma, and Cobalt-60) a minimum of three different MCNP calculations had to be performed. A brief description of these MCNP calculations is provided here. The computer input file names are listed in Section 8.

1. A coupled neutron-gamma calculation using the neutron source was performed to generate a surface source file for particles leaving the side and top of the overpack.
2. A gamma only calculation was performed using the decay gamma source. This run generated a surface source file for particles leaving the side and top of the overpack. The energy range of starting particles was 0.7 MeV to 1.5 MeV.
3. A gamma only calculation was performed using the decay gamma source. This run generated a surface source file for particles leaving the side and top of the overpack. The energy range of starting particles was 1.5 MeV to 3.0 MeV.
4. A gamma only calculation was performed using the decay gamma source. This run generated a surface source file for particles leaving the side and top of the overpack. The energy range of starting particles was 0.3 MeV to 0.7 MeV.
5. A gamma only calculation using the Cobalt-60 source was performed. This calculation generated a surface source file for particles leaving the side and top of the overpack.

In some cases, the MCNP runs that generated the surface source file for the side and top of the HI-STORM overpack were different. The specifics of each MCNP calculation are listed in Section 8. The surface source technique was only used for the HI-STORM analysis.

7.5.2 Dose Rates Adjacent to the Overpack

MCNP calculations were performed to determine the dose rate at the surface of the overpack and at a distance of 1 meter from the overpack. The computer input files used for the calculations are listed in Section 8.

Appendix D contains the EXCEL output showing the doses at the surface and 1 meter from the HI-STORM 100S overpack. Theses dose rates are expressed in mrem/hr. A summary of the important dose locations is provided in Section 9.

7.5.3 Cask Configurations for Dose Versus Distance Calculations

Figure 1 shows a diagram of the ISFSI. The estimation of the dose from a facility of this size and orientation is a complicated calculation. It is almost impossible and certainly impractical to try to model the entire facility in MCNP or any other computer code. Therefore, numerous smaller calculations had to be performed. The results from these smaller calculations were combined in a conservative fashion to estimate the dose from the entire facility.

The radiation source from this facility can be separated into two components. The first will be referred to as the top-dose. This is the dose from radiation that leaves the tops of the overpacks. The second component will be referred to as side-dose. This is the dose from radiation that leaves the sides of the overpacks.

The geometry of the facility will impact each of these dose components in a different fashion. The total top-dose will be a summation of the top-doses from all 140 casks where the actual distance from the dose location to the individual cask is accounted for.

The total side-dose will be a summation of the side-doses from all 140 casks where the distances within the facility and the self-shielding of one row of casks to another row are accounted for. Since the side-dose is from particles leaving the side of the overpack, this dose contribution will be greatly reduced if the cask is situated behind another cask. The front cask blocks radiation from reaching the site-boundary. However, it is incorrect to say that the front cask completely blocks all radiation from the back cask. The fraction of radiation blocked was therefore calculated with MCNP and used in the determination of the total side-dose.

Dose locations along the long side of the cask array are facing 28 casks directly, i.e. without being shielded by other casks. Dose locations along the short side of the array only face 5 casks directly. Dose rates at dose points along the long side of the array will therefore always be higher than dose rates at dose points along the short side of the array. As a bounding approach, dose rates are generally calculated for the long side of the array, regardless of the actual orientation of the dose location relative to the cask array. In the particular case of the ISFSI shown in Figure 1, the peak dose location is perpendicular to the long side of the array but is not in the center of the array. Rather the peak dose location is approximately in the center of Pad 6 in the North direction.

Figure 2 shows three different overpack configurations that were analyzed to determine the self-shielding effects. Since particles leaving the top of the overpack are not self-shielded, only

particles leaving the side of the overpack were used in the sources for these configurations. Therefore, the results from these configurations will apply only to the side-dose. These configurations are described in detail below.

7.5.3.1 Configuration 1

Configuration 1 is a single cask surrounded by 1050 meters of air in the radial direction and 700 meters of air in altitude. The cask is sitting on an infinite slab of dirt. This configuration was used to calculate the average dose rate versus distance for a single cask. The dose rate from particles leaving the side of the cask was calculated separately from the dose rate from particles leaving the top of the cask. The total dose rate was also calculated.

These dose rates were combined in a manner, which is discussed later, to determine the dose rate from the entire facility at the site boundary and security fence.

The MCNP input files used to analyze this configuration are listed in Section 8. All three sources (neutron, photon, and cobalt) were analyzed in this configuration. The results for this configuration are presented in Appendix E.

7.5.3.2 Configuration 2

[

]

7.5.3.3 Configuration 3

[

]

7.5.4 Final Dose Rate Calculations

[

]

Appendix G presents the results of the calculations to determine the dose rate as a function of distance from the ISFSI. [

] The results are summarized in Section 9.

The dose rates at a distance of 1.5 miles were estimated by extrapolation using appropriate curves. The curves were calculated by fitting the data from the total dose rates versus distance for the entire cask array for distances between 300 and 600 m. The curves reproduce the calculated dose rates between 300 m and 600 m within less than 2.5 %.

Based on the assumed occupancy times and ISFSI dose rates, personnel dose values for the operation and maintenance of the ISFSI are calculated in Appendix H. The accumulated dose for the construction of the last pad is also calculated in Appendix H. Since these operations will occur inside the ISFSI array, a conservative calculation was performed to estimate the dose rate. [

] The results are presented in Appendix H and summarized in Section 9. The MCNP calculations are listed in Section 8.

7.6 Dose Rates from the HI-STORM 100S Without a Lid

The MPC transfer operations from the 125-ton HI-TRAC transfer cask to the HI-STORM 100S overpack will occur outside the Part 50 structure at the Cask Transfer Facility (CTF). As a result of this, the off-site dose rate from the HI-STORM overpack in the CTF must be calculated. The overpack configuration in the CTF and on the ISFSI are essentially identical with the following exception. After the MPC has been lowered into the HI-STORM overpack and the HI-TRAC transfer cask has been removed, the HI-STORM overpack will be temporarily without a lid. This lidless configuration will permit a significant amount of radiation streaming out the top of the

overpack because of the annular gap between the MPC and the overpack. Therefore, the dose rate as a function of distance from a lidless overpack in the CTF was calculated.

The dose rate was calculated only for radiation leaving the top surface of the lidless overpack. The dose rate from radiation leaving the side of the overpack is already accounted for in the ISFSI dose rate calculations. [

] The surrounding air and ground region were as described in Section 7.5.3.1. The MCNP surface source technique, as described in Section 7.5.1, was used for these calculations. The specific input files are listed in Section 8.

The results of these calculations are presented in Appendix I.

7.7 Dose Rates from the 125-ton HI-TRAC Transfer Cask

The 125-ton HI-TRAC transfer cask will be used at DCPP for loading the MPC and transferring the MPC to the HI-STORM overpack. Therefore, the dose rates from the 125-ton HI-TRAC were calculated for use in estimating the occupational exposure during loading operations.

7.7.1 Normal Conditions

The physical configuration of the HI-TRAC used for calculating the dose rate from radiation leaving the side of the overpack was as described in Section 7.2. [

]

The normal condition for the 125-ton HI-TRAC may or may not have water in the water jacket and may or may not have water in the MPC. These conditions vary depending on the process being performed in the loading evolution. For example, water is not present in the water jacket when the HI-TRAC is removed from the spent fuel pool; however, water is in the MPC. For all models, the outer water jacket was assumed to be filled with water and the MPC was assumed to be dry. This is the configuration that exists after the MPC has been seal welded and undergone the moisture removal process.

The configuration with water in the water jacket and no water in the MPC was used for all personnel dose calculations. After the MPC is removed from the spent fuel pool there is water in the MPC and no water in the water jacket. The HI-TRAC is then placed in the cask washdown area where the water jacket is filled to provide additional shielding before significant work begins. This configuration of water in both the water jacket and the MPC exists through the MPC closure operations until the moisture removal phase begins. Therefore, the dose calculations with water in the water jacket but not in the MPC are conservative for the conditions existing prior to the moisture removal since the additional shielding provided by the water in the MPC is not

accounted for. The temporary shielding which will be placed above the water jacket surrounding the HI-TRAC transfer cask consists primarily of water. Credit was taken for this shielding in one set of calculations.

The following three variations of the normal configuration were analyzed.

- Normal conditions with water in the water jacket and no water in the MPC. HI-TRAC lid is installed.
- Normal conditions with water in the water jacket and no water in the MPC. HI-TRAC lid is not installed.
- Normal conditions with water in the water jacket and no water in the MPC. HI-TRAC lid is not installed but the temporary shielding is installed. The temporary shielding was modeled as water extending from the water jacket upward to the top of the upper forging and out radially to the edge of the water jacket.

The results of these calculations are presented in Appendix J and the input files used are listed in Section 8.

7.7.2 Accident Conditions

In addition to the normal condition dose rates, the dose rate around the transfer cask was calculated for a postulated accident scenario in which the transfer cask undergoes a vertical drop. The potential consequence of this vertical drop is a slump in the lead below the upper forging and below the lifting trunnion. The magnitude of this lead slump was calculated to be less than 0.7 inches in reference [13]. Conservatively, the lead slump was modeled as 0.8 inches. The dose rate was calculated in a localized area around the lifting trunnion. This area was the width of the lifting trunnion and 4.125 inches in height and fully encompassed the lead slump below the lifting trunnion. The region of highest dose for the lead slump accident occurs below the lifting trunnion since this region is closest to the active fuel zone.

The dose rate was calculated over the same area at radial distances equal to the edge of the water jacket, and 6 inches, 1 foot, 2 foot, and 1 meter from the edge of the water jacket. For the lead slump calculations, the water in the water jacket and MPC were not modeled. The dose rate was calculated before and after the lead slump event.

The results of these calculations are presented in Appendix J and the input files used are listed in Section 8. The dose consequences from the accidental loss of the water jacket are reported in references [4] and [10].

7.8 Doses During Loading and Unloading Operations

The results from the calculation of dose rates around the HI-STORM overpack and the HI-TRAC transfer cask with design basis fuel were used to estimate the occupational exposure during the loading and unloading operations. The results of this estimate are presented in Appendix K.

The sequence of steps listed for loading and unloading is meant to be representative of the loading and unloading process and not an exhaustive list of the processes. The estimated duration of the step is provided as well as the time in the dose field. The difference between the two is that the process may take X amount of time but the workers only have to be near the cask for Y amount of time. Consistent with ALARA principles, the workers will be in an area of lower dose when their presence is not required around the transfer or storage cask. Likewise, the number of workers around the transfer or storage cask will be kept to a minimum. The dose rates reported in Appendix K were calculated by taking the number of workers times the dose at the location times the time in the dose field. Appendix K provides additional discussion about the dose calculations for the occupational exposure estimates.

As mentioned in Section 7.7, the MPC will be filled with water during a portion of the loading and unloading operations. Conservatively, this additional shielding was not credited in the analysis.

8. Computer Files

All computer runs listed here were made on PCs at Holtec's main office. All files are stored on the Holtec computer server in directory \projects\1073\eredmond.

The following is a list of all MCNP runs that were used in this report. See Section 7 for details of the calculations.

Input File	Description
MCNP HI-STORM 100S calculations for the ISFSI	
h4c5d11	
h4c5d12	
h4c5e07	
h4n5d11	
h4n5d12	
h4n5e07	

Input File	Description
h4p5d11	
h4p5d12	
h4q5d11	
h4q5d12	
h4r5d11	
h4r5d12	
h4p5e08	
h4p5e11	
h4q5e07	
h4q5e10	
h4r5e07	
h4r5e10	
h4c5d21	
h4n5d15	
h4p5d15	
h4q5d15	
h4r5d15	
h4c5d22	
h4n5d16	
h4p5d16	
h4q5d16	

Input File	Description
h4r5d16	
MCNP HI-STORM 100S calculations inside the ISFSI	
h4c5d23	
h4n5d17	
h4p5d17	
h4q5d17	
h4r5d17	
h4p5e14	
h4q5e13	
h4r5e13	
MCNP HI-STORM 100S without a lid calculations	
h4c5e05	MPC-24 cobalt run to generate surface source out top of overpack without lid
h4c5e06	MPC-24 run using h4c5e05 calculating dose versus distance
h4n5e05	MPC-24 neutron run to generate surface source out top of overpack without lid
h4n5e06	MPC-24 run using h4n5e05 calculating dose versus distance
h4p5e09	MPC-24 photon run to generate surface source out top of overpack without lid - 0.7-1.5 MeV
h4p5e10	MPC-24 run using h4p5e09 calculating dose versus distance
h4q5e08	MPC-24 photon run to generate surface source out top of overpack without lid - 1.5-3.0 MeV
h4q5e09	MPC-24 run using h4q5e08 calculating dose versus distance
h4r5e08	MPC-24 photon run to generate surface source out top of overpack without lid - 0.3-0.7 MeV
h4r5e09	MPC-24 run using h4r5e08 calculating dose versus distance
h4c3d03	
h4p3d03	
h4q3d03	
h4r3d03	
h4n3d03	
h4c5d24	

Input File	Description
h4c5d25	
h4n5d19	
h4n5d21	
h4p5d19	
h4p5d23	
h4q5d19	
h4q5d23	
h4r5d19	
h4r5d23	
MCNP 125-ton HI-TRAC calculations with tallies along the axial length at various radial distances - normal conditions with water in the water jacket but not in the MPC	
u4c5a02	MPC-24 cobalt source - HI-TRAC lid installed
u4p5a02	MPC-24 photon source - HI-TRAC lid installed - 0.7-3.0 MeV
u4q5a02	MPC-24 photon source - HI-TRAC lid installed - 0.45-0.7 MeV
u4n5a02	MPC-24 neutron source - HI-TRAC lid installed
u4c5a04	MPC-24 cobalt source - HI-TRAC lid not installed
u4p5a04	MPC-24 photon source - HI-TRAC lid not installed - 0.7-3.0 MeV
u4q5a04	MPC-24 photon source - HI-TRAC lid not installed - 0.45-0.7 MeV
u4n5a04	MPC-24 neutron source - HI-TRAC lid not installed
u4c5a05	MPC-24 cobalt source - HI-TRAC lid not installed - temporary shielding installed
u4p5a05	MPC-24 photon source - HI-TRAC lid not installed - temporary shielding installed - 0.7-3.0 MeV
u4q5a05	MPC-24 photon source - HI-TRAC lid not installed - temporary shielding installed - 0.45-0.7 MeV
u4n5a05	MPC-24 neutron source - HI-TRAC lid not installed - temporary shielding installed
MCNP 125-ton HI-TRAC calculations with tallies along the axial length at various radial distances - accident conditions with no water in the water jacket or the MPC	
u4c5c04	MPC-24 cobalt source - HI-TRAC lid installed
u4c5c05	MPC-24 cobalt source - HI-TRAC lid installed - 0.8 inch lead slump
u4p5c04	MPC-24 photon source - HI-TRAC lid installed - 0.7-3.0 MeV
u4p5c05	MPC-24 photon source - HI-TRAC lid installed - 0.8 inch lead slump - 0.7-3.0 MeV

Input File	Description
u4q5c04	MPC-24 photon source - HI-TRAC lid installed - 0.45-0.7 MeV
u4q5c05	MPC-24 photon source - HI-TRAC lid installed - 0.8 inch lead slump - 0.45-0.7 MeV
u4n5c04	MPC-24 neutron source - HI-TRAC lid installed
u4n5c05	MPC-24 neutron source - HI-TRAC lid installed - 0.8 inch lead slump
MCNP 125-ton HI-TRAC calculations with radial tallies along the top and bottom surface - normal conditions with water in the water jacket but not in the MPC	
ht24c03	MPC-24 cobalt source - HI-TRAC lid installed - pool lid installed
ht24n03	MPC-24 neutron source - HI-TRAC lid installed - pool lid installed
ht24p03	MPC-24 photon source - HI-TRAC lid installed - pool lid installed - 0.7-3.0 MeV
ht24p23	MPC-24 photon source - HI-TRAC lid installed - pool lid installed - 0.45-0.7 MeV
u4c5a06	MPC-24 cobalt source – HI-TRAC lid installed – pool lid with 2.5 inches Holtite-A on bottom
u4n5a06	MPC-24 neutron source – HI-TRAC lid installed – pool lid with 2.5 inches Holtite-A on bottom
u4p5a06	MPC-24 photon source – HI-TRAC lid installed – pool lid with 2.5 inches Holtite-A on bottom - 0.7-3.0 MeV
u4q5a06	MPC-24 photon source – HI-TRAC lid installed – pool lid with 2.5 inches Holtite-A on bottom - 0.45-0.7 MeV
u4c3a01	
u4p3a01	
u4q3a01	
u4n3a01	
B&W 15x15 ORIGEN-S and SAS2H input files	
a70a4a1a.inp	SAS2H input file for 70,000 MWD/MTU 4.0 wt.% ^{235}U B&W 15x15
a45a4a3a.inp	ORIGEN-S input file for 45,000 MWD/MTU 4.0 wt.% ^{235}U B&W 15x15
a45a4a3c.inp	ORIGEN-S input file for 45,000 MWD/MTU 4.0 wt.% ^{235}U B&W 15x15 with 1 gm Co-59
a50a4a3a.inp	ORIGEN-S input file for 50,000 MWD/MTU 4.0 wt.% ^{235}U B&W 15x15
a50a4a3c.inp	ORIGEN-S input file for 50,000 MWD/MTU 4.0 wt.% ^{235}U B&W 15x15 with 1 gm Co-59
a52m4a3a.inp	ORIGEN-S input file for 52,500 MWD/MTU 4.0 wt.% ^{235}U B&W 15x15
a52m4a3c.inp	ORIGEN-S input file for 52,500 MWD/MTU 4.0 wt.% ^{235}U B&W 15x15 with 1 gm Co-59
a55a4a3a.inp	ORIGEN-S input file for 55,000 MWD/MTU 4.0 wt.% ^{235}U B&W 15x15
a55a4a3c.inp	ORIGEN-S input file for 55,000 MWD/MTU 4.0 wt.% ^{235}U B&W 15x15 with 1 gm Co-59
a70a4k1a.inp	SAS2H input file for 70,000 MWD/MTU 4.5 wt.% ^{235}U B&W 15x15
a60a4k3a.inp	ORIGEN-S input file for 60,000 MWD/MTU 4.5 wt.% ^{235}U B&W 15x15

Input File	Description
a60a4k3c.inp	ORIGEN-S input file for 60,000 MWD/MTU 4.5 wt.% ^{235}U B&W 15x15 with 1 gm Co-59
15bw_xsc.in	SAS2H input file for 42,500 MWD/MTU 2.9 wt.% ^{235}U B&W 15x15
15bw325.in	ORIGEN-S input file for 32,500 MWD/MTU 2.9 wt.% ^{235}U B&W 15x15
15bw325c.in	ORIGEN-S input file for 32,500 MWD/MTU 2.9 wt.% ^{235}U B&W 15x15 with 1 gm Co-59
15bw_xsd.in	SAS2H input file for 42,500 MWD/MTU 3.2 wt.% ^{235}U B&W 15x15
15bw375.in	ORIGEN-S input file for 37,500 MWD/MTU 3.2 wt.% ^{235}U B&W 15x15
15bw375c.in	ORIGEN-S input file for 37,500 MWD/MTU 3.2 wt.% ^{235}U B&W 15x15 with 1 gm Co-59
15bw_xs.in	SAS2H input file for 45,000 MWD/MTU 3.4 wt.% ^{235}U B&W 15x15
15bw415.in	ORIGEN-S input file for 41,500 MWD/MTU 3.4 wt.% ^{235}U B&W 15x15
15bw415c.in	ORIGEN-S input file for 41,500 MWD/MTU 3.4 wt.% ^{235}U B&W 15x15 with 1 gm Co-59
15bw_xse.in	SAS2H input file for 50,000 MWD/MTU 3.6 wt.% ^{235}U B&W 15x15
15bw475.in	ORIGEN-S input file for 47,500 MWD/MTU 3.6 wt.% ^{235}U B&W 15x15
15bw475c.in	ORIGEN-S input file for 47,500 MWD/MTU 3.6 wt.% ^{235}U B&W 15x15 with 1 gm Co-59
Westinghouse 17x17 ORIGEN-S and SAS2H input files	
17w29xs.in	SAS2H input file for 42,500 MWD/MTU 2.9 wt.% ^{235}U W17x17
17w40xs.in	SAS2H input file for 60,000 MWD/MTU 4.0 wt.% ^{235}U W17x17
17w325.in	ORIGEN-S input file for 32,500 MWD/MTU 2.9 wt.% ^{235}U W17x17
17w325c.in	ORIGEN-S input file for 32,500 MWD/MTU 2.9 wt.% ^{235}U W17x17 with 1 gm Co-59
17w550.in	ORIGEN-S input file for 55,000 MWD/MTU 4.0 wt.% ^{235}U W17x17
17w550c.in	ORIGEN-S input file for 55,000 MWD/MTU 4.0 wt.% ^{235}U W17x17 with 1 gm Co-59

9. Summary

The shielding analysis of the Independent Spent Fuel Storage Installation (ISFSI) at Diablo Canyon Power Plant (DCPP) is presented in this report. The facility consists of up to 140 HI-STORM 100S casks and is assumed to be filled with fuel of 32,500 MWD/MTU and a minimum cooling time of 5 years. Figure 1 shows the ISFSI configuration with the age of the fuel in the cask shown inside the circle representing the cask. The dose rates were calculated for a single cask and the entire array. The results of the single cask analysis are presented below for the surface and 1 meter dose rates.

Dose Rates on the Surface of the HI-STORM 100S
32,500 MWD/MTU and 5 Year Cooling
(mrem/hr)

Location	Neutron	Photon†	Cobalt	Total
Bottom duct	2.90	6.80	17.01	26.72
Fuel midplane	0.76	33.92	0.11	34.79
Top duct	2.55	9.90	18.32	30.77
Top of overpack, above shield block	0.91	1.56	1.47	3.93
Top of overpack, above exit ducts	13.00	2.45	13.42	28.87

† photons from neutron interactions are included in the photon dose

Dose Rates at 1 meter from the HI-STORM 100S
32,500 MWD/MTU and 5 Year Cooling
(mrem/hr)

Location	Neutron	Photon†	Cobalt	Total
Bottom duct	0.34	4.84	5.33	10.50
Fuel midplane	0.35	17.04	0.57	17.95
Top duct	0.37	4.64	5.00	10.02
Top of overpack	0.42	0.39	0.51	1.32

† photons from neutron interactions are included in the photon dose

For the operation of the ISFSI, the following dose rates are calculated.

Operation	Persons	Occupancy (hours/year)	Dose Rate (mrem/hr)	Dose (person-rem/year)
Walk-down	1	122	15.0	1.83
Repairs	2	12	65.0	1.56
Construction of ISFSI pad 7	15	480	6.02	43.3

For other on-site and off-site dose locations, the following dose rates are calculated. Distances specified are distances from the cask surface.

Location	Distance		Occupancy	Dose	
	m	ft	hours	mrem/hr	mrem/year
Nuisance Fence, Front	30.48	100	n/a	1.87	n/a
Make-up Water Facility	67.97	223	2080	5.08E-01	1.06E+3
Reactor	243.23	798	2080	2.23E-02	4.65E+01
Site Boundary	426.72	1400	2080	2.72E-03	5.65
Nearest Resident	2414	7920	8760	4.03E-08	3.53E-04

The hourly and annual dose rates from the cask array as a function of distance are presented in the following table. The annual dose rates are specified for occupancy factors of 8760 hrs/yr and for 2080 hrs/yr. The doses were calculated at locations that were perpendicular to the long side of the array at distances ranging from 40 feet to 600 m from the array. Doses for the distance of 1.5 miles (nearest resident) were determined by extrapolation. Up to 600 m, linear interpolation can be used to determine the dose at intermediate distances.

Hourly and Annual Dose Rates at Distances from the ISFSI

Distance		Dose		
m	ft	mrem/yr (8760 hrs/yr)	mrem/yr (2080 hrs/yr)	mrem/hr
4.57	15.00	1.05E+05	2.50E+04	1.20E+01
6.10	20.00	8.73E+04	2.07E+04	9.97E+00
15.24	50.00	3.92E+04	9.31E+03	4.47E+00
30.48	100.00	1.64E+04	3.89E+03	1.87E+00
33.53	110.00	1.43E+04	3.40E+03	1.63E+00
42.67	140.00	9.73E+03	2.31E+03	1.11E+00
45.72	150.00	8.67E+03	2.06E+03	9.90E-01
60.96	200.00	5.35E+03	1.27E+03	6.11E-01
67.97	223.00	4.45E+03	1.06E+03	5.08E-01
79.25	260.00	3.32E+03	7.89E+02	3.79E-01
91.44	300.00	2.46E+03	5.85E+02	2.81E-01
105.16	345.00	1.85E+03	4.39E+02	2.11E-01
135.64	445.00	1.01E+03	2.41E+02	1.16E-01
243.23	798.00	1.96E+02	4.65E+01	2.23E-02
250.00	820.21	1.79E+02	4.26E+01	2.05E-02
300.00	984.25	9.90E+01	2.35E+01	1.13E-02
350.00	1148.29	5.50E+01	1.31E+01	6.28E-03
400.00	1312.34	3.14E+01	7.45E+00	3.58E-03
426.72	1400.00	2.38E+01	5.65E+00	2.72E-03
450.00	1476.38	1.88E+01	4.46E+00	2.14E-03
500.00	1640.42	1.17E+01	2.77E+00	1.33E-03
550.00	1804.46	7.51E+00	1.78E+00	8.57E-04
600.00	1968.50	4.99E+00	1.18E+00	5.69E-04
2414.02	7920 (1.5 miles)	3.53E-04	8.38E-05	4.03E-08

The following tables contain total dose rates from effluent release and direct radiation compared to regulatory limits. Dose rates from effluent release were taken from [8]. The first table lists dose rates for normal and off-normal conditions. The second table lists doses for accident conditions for a 30 day period. Both tables are for an individual at the site boundary (1400 ft).

	Dose Rate from Effluent Release (mrem/year) **Reference [8] 8760 hours/yr**	**Direct Dose Rate (mrem/year)** **This report 2080 hours/yr**	**Total Dose Rate (mrem/year)**	**Regulatory Limit (mrem/year)**
10CFR72.104(a) – Normal (140 casks)				
Whole Body ADE	0.27	5.65	5.92	25
Thyroid ADE	0.043	5.65	5.693	75
Critical Organ ADE (Max)	1.46	5.65	7.11	25
10CFR72.104(a) – Off-Normal (140 casks)				
Whole Body ADE	0.75	5.65	6.40	25
Thyroid ADE	0.06	5.65	5.71	75
Critical Organ ADE (Max)	5.49	5.65	11.14	25
ADE: Annual Dose Equivalent				

It has to be noted that the dose rates from other Uranium Fuel Cycle operations have to be added to the values listed above to determine whether the regulatory requirements for normal conditions (10CFR72.104) are met.

	Dose from Effluent Release (mrem/30 days) Reference [8]	Direct Dose Rate (mrem/30 days) (This report)	Total Dose (mrem/30 days)	Regulatory Limit (mrem/30 days)
10CFR72.106(b) – Accident (1 cask)				
TEDE	0.83	1.96	2.79	5000
TODE = DDE + CDE (Max)	6.36	1.96	8.32	50000
LDE	0.022	1.96	1.982	15000
SDE	0.026	1.96	1.986	50000
ADE: Annual Dose Equivalent; TEDE: Total Effective Dose Equivalent; TODE: Total Organ Dose Equivalent; DDE: Deep Dose Equivalent; LDE: Lens Dose Equivalent; SDE: Shallow Dose Equivalent				

Please note that the direct dose under accident conditions is identical to the direct dose under normal conditions since there are no accidents which significantly affect the shielding of the HI-STORM overpack. Therefore, as a conservative estimate, the dose from the complete ISFSI at the site boundary over a period of 30 days (2.72E-03 mrem/hr * 30 days * 24 hr/day) is used in above table.

10. References†

[1] O. W. Hermann, C. V. Parks, *SAS2H: A Coupled One-Dimensional Depletion and Shielding Analysis Module*, NUREG/CR-0200, Revision 5, (ORNL/NUREG/CSD-2/V2/R5), Oak Ridge National Laboratory, September 1995.

[2] O. W. Hermann, R. M. Westfall, *ORIGEN-S: SCALE System Module to Calculate Fuel Depletion, Actinide Transmutation, Fission Product Buildup and Decay, and Associated Radiation Source Terms*, NUREG/CR-0200, Revision 5, (ORNL/NUREG/CSD-2/V2/R5), Oak Ridge National Laboratory, September 1995.

[3] J. F. Briesmeister, editor, *MCNP - A General Monte Carlo N-Particle Transport Code,* LA-12625-M, Los Alamos National Laboratory, November 1993.

[4] *Final Safety Analysis Report for the HI-STORM 100 Cask System,* HI-2002444, Rev. 0, Holtec International (US NRC Docket No. 72-1014).

[5] PG&E Specification 10012-N-NPG.

[6] *HI-STORM Shielding Design and Analysis for Storage,* HI-971608, Rev. 13, Holtec International.

[7] "Diablo Canyon ISFSI Project – Diablo Canyon Units 1 and 2 – Transmittal of design inputs, site information and reference identification", Letter from R. L. Klimczak (PG&E) to E. Lewis (Holtec), January 23th, 2001.

[8] *Diablo Canyon ISFSI Site Boundary Confinement Analysis*, HI-2002513, Rev. 4, Holtec International.

[9] *Real Individual*, USNRC Interim Staff Guidance (ISG) No. 13, Rev. 0, May 2000.

[10] HI-STORM 100 License Amendment Request (LAR) 1014-1, Revision 2, July 2001.

---

† Note: This revision status of Holtec documents cited above is subject to updates as the project progresses. This document will be revised if a revision to any of the above-referenced Holtec work products materially affects the instructions, results, conclusions or analyses contained in this document. Otherwise, a revision to this document will not be made and the latest revision of the referenced Holtec documents shall be assumed to supersede the revision numbers cited above. The Holtec Project Manager bears the undivided responsibility to ensure that there is no intra-document conflict with respect to the information contained in all Holtec-generated documents on a *safety-significant* project. The latest revision number of all documents produced by Holtec International in a *safety-significant* project is readily available from the company's Document Transmittal Form (DTF) database.

[11] "Diablo Canyon ISFSI Project – Diablo Canyon Units 1 and 2 – Transmittal of PG&E design inputs", Letter from Richard Klimczak (PG&E) to Eric Lewis (Holtec), November 17, 2000.

[12] "Diablo Canyon ISFSI Project – Diablo Canyon Units 1 and 2 Transmittal of design inputs, site information and reference identification.", Letter from Richard Klimczak (PG&E) to Eric Lewis (Holtec), February 19, 2001.

[13] *Structural Analysis Of HI-TRAC -Vertical Drops And Tipover In Diablo Canyon Fuel Building,* HI-2002506, Rev. 0, Holtec International.

[14] *HI-STAR Shielding Design and Analysis for Transport and Storage,* HI-951322, Rev. 12, Holtec International.

[15] *HI-STORM 100 System Additional Shielding Calculations,*HI-2012702, Rev. 4, Holtec International.

10.1 Drawings

The following is a list of the applicable drawings and Engineering Change Orders (ECOs) that were used to generate the MCNP models used in this analysis.

The HI-STORM 100S design was enhanced and as a result the analysis in this report was updated to include the new design. The significant differences between the old design and the new design were the removal of the inner shield shell and compensating change in concrete density and minor changes to the lid. From the exterior of the overpack, these changes are not noticeable. All MCNP calculations were rerun in revision 3 of this report. However, all calculations that used the surface source files utilized the older model. This is acceptable because in these MCNP runs the source is being started on the exterior of the overpack and the outer steel shell of the overpack was unaffected in the design enhancements. Therefore, scattering off the exterior of the overpack is unaffected.

Revision 3 of the HI-STORM 100S drawings introduced a variable height for the body of the overpack. Conservatively, the shorter version of the HI-STORM 100S was analyzed. This shorter version of the HI-STORM 100S was the same overpack configuration that was analyzed in Reference [10] and therefore this analysis is consistent with HI-STORM FSAR and license amendments.

Drawing Number	Revision Number	Drawing Number	Revision Number
HI-STORM 100S			
3443	3		
HI-STORM 100S – Earlier Design			
3067	0	3074	0
3068	0	3075	0
3070	0	BM-3065	0

Drawing Number	Revision Number	Drawing Number	Revision Number
3073	0	BM-3066	0
MPC-24			
1395 Sheet 1 of 4	12	1396 Sheet 1 of 6	15
1395 Sheet 2 of 4	10	BM 1478 Sheet 1 of 2	10
1395 Sheet 3 of 4	11	BM 1478 Sheet 2 of 2	13
125-ton HI-TRAC			
1880 Sheet 1 of 10	8	1880 Sheet 7 of 10	8
1880 Sheet 2 of 10	9	1880 Sheet 8 of 10	8
1880 Sheet 3 of 10	8	BM 1880 Sheet 1 of 2	8
1880 Sheet 4 of 10	9	BM 1880 Sheet 2 of 2	6
1880 Sheet 5 of 10	9	ECO 1025-5	1
1880 Sheet 6 of 10	9	ECO 1025-6	0

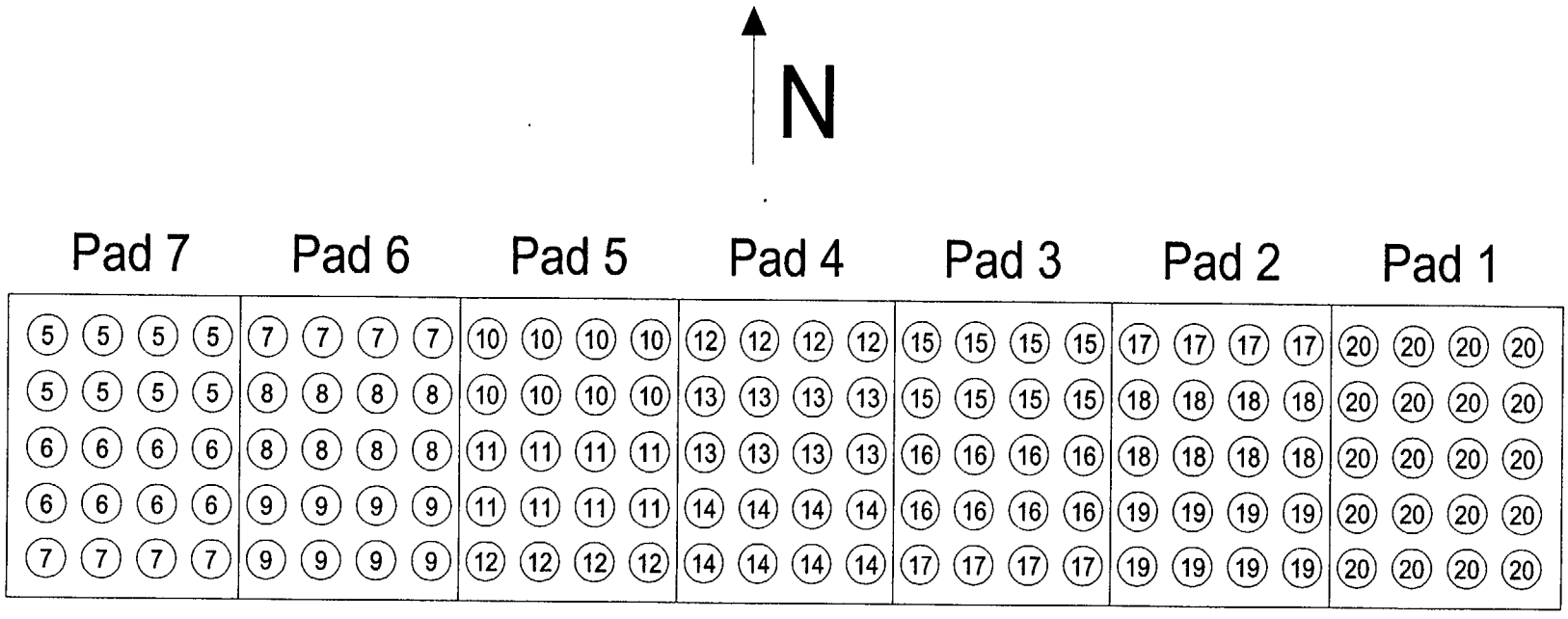

Figure 1: Arrangement of the ISFSI at DCPP with assumed cooling time for each cask position.

PROPRIETARY

Figure 2: The three different MCNP models used in the analysis of the ISFSI at DCPP are depicted above.

Appendix A: Bounding Burnup and Cooling Time for HI-STORM

This appendix determines the bounding MPC with the bounding burnup and cooling time for the HI-STORM analysis.

The following burnup and cooling times were analyzed from the allowable burnup and cooling times. The enrichment used for the analysis is also shown.

MPC	Burnup (MWD/MTU)	Cooling Time (years)	Enrichment (wt.% ^{235}U)
24	41,500	5	3.4
24	45,000	6	4.0
24	50,000	8	4.0
24	52,500	10	4.0
24	55,000	12	4.0
32	32,500	5	2.9
32	37,500	7	3.2
32	45,000	8	4.0

The last burnup and cooling time for the MPC-32 has a conservatively higher burnup for the allowable cooling time of 8 years.

The results presented on the pages that follow are summary results from EXCEL for the dose rate on the surface and one meter away from the side and top of the overpack. A brief description of the format of these pages can be found in Appendix D. The dose locations shown in the left hand column are the same locations that are used in the LAR to the HI-STORM FSAR [10]. The segments listed are the segments on the MCNP surfaces that give the highest dose rate. Appendix D provides a detailed description of the dose locations and presents detailed results for the bounding burnup and cooling time.

The results indicate that the bounding MPC is the MPC-32 with a burnup and cooling time of 32,500 MWD/MTU and 5 year cooling. This combination has the highest dose rate on the radial surface of the cask. The highest dose rate on the top of the cask is achieved with a different burnup and cooling time combination. However, since the contribution to the off-site dose rate from the top of the overpack is a small fraction of the total dose from the overpack, the MPC-32 with 32,500 MWD/MTU and 5 year cooling also produces the highest off-site dose. This is demonstrated in Appendix E.

41,500 MWD/MTU burnup - B&W 15x15 fuel element BPRA Curies 331.00
3.4 w/o U235 TP Curies 0.00

5.0 YR	5.0 YR	5.0 YR	5.0 YR		dwg3443				
	h4n5d11m		h4n5d11m	h4p5d11m	4q5d11m	h4c5d11n		num fuel	24
				h4r5d11m					
				h4p5e08m	h4q5e07m				
				h4r5e07m					
	neutron		phot (n,p)	phot		cobalt		total	
	value	rel err	value	rel err	value	rel err	value	rel err	value	rel err
TSAR dose locations										
adjacent										
segs										
1	1	4.41	0.03	0.42	0.03	6.35	0.07	14.66	0.01	25.84	0.02
2	7	1.15	0.04	1.26	0.02	30.30	0.01	0.09	0.41	32.81	0.01
3	1	3.87	0.03	0.17	0.06	9.63	0.06	15.46	0.01	29.14	0.02
4	5	1.38	0.02	0.56	0.02	1.14	0.05	1.24	0.04	4.31	0.02
4a	1	19.75	0.02	0.50	0.04	1.96	0.04	11.33	0.02	33.54	0.01
one meter											
1	1	0.51	0.08	0.20	0.17	4.43	0.07	4.59	0.04	9.73	0.04
2	8	0.53	0.03	0.61	0.02	15.21	0.01	0.49	0.11	16.84	0.01
3	1	0.57	0.07	0.10	0.13	4.39	0.08	4.22	0.03	9.27	0.04
4	6	0.63	0.02	0.19	0.03	0.25	0.05	0.43	0.03	1.50	0.02

adjacent	neutrons	fuel gam	co-60	total
1	4.41	6.77	14.66	25.84
2	1.15	31.56	0.09	32.81
3	3.87	9.80	15.46	29.14
4	1.38	1.70	1.24	4.31
4a	19.75	2.46	11.33	33.54
one meter				
1	0.51	4.63	4.59	9.73
2	0.53	15.82	0.49	16.84
3	0.57	4.49	4.22	9.27
4	0.63	0.44	0.43	1.50

45,000 MWD/MTU BW 15x15 4.0 wt% U235
4.0 wt% U235
6.0 YR 6.0 YR 6.0 YR 6.0 YR

BPRA Curies	331.00
TP Curies	0.00
num fuel	24

		neutron		phot (n,p)		phot		cobalt		total	
		h4n5d11m		h4n5d11m		h4p5d11m h4r5d11m h4p5e08m h4r5e07m	dwg3443 4q5d11m h4q5e07m	h4c5d11n			
	segs	value	rel err	value	rel err	value	rel err	value	rel err	value	rel err
TSAR dose locations											
adjacent											
1	1	4.49	0.03	0.43	0.03	5.38	0.07	12.70	0.01	23.01	0.02
2	7	1.17	0.04	1.29	0.02	22.72	0.02	0.08	0.41	25.25	0.01
3	1	3.94	0.03	0.18	0.06	8.42	0.06	13.69	0.01	26.23	0.02
4	5	1.40	0.02	0.57	0.02	0.94	0.06	1.10	0.04	4.01	0.02
4a	1	20.12	0.02	0.51	0.04	1.50	0.04	10.03	0.02	32.17	0.01
one meter											
1	1	0.52	0.08	0.20	0.17	3.54	0.08	3.98	0.04	8.24	0.04
2	8	0.54	0.03	0.62	0.02	11.36	0.01	0.43	0.11	12.94	0.01
3	1	0.58	0.07	0.10	0.13	3.70	0.09	3.74	0.03	8.12	0.04
4	1	0.74	0.04	0.29	0.04	0.14	0.04	0.26	0.06	1.44	0.03

adjacent	neutrons	fuel gam	co-60	total
1	4.49	5.81	12.70	23.01
2	1.17	24.00	0.08	25.25
3	3.94	8.60	13.69	26.23
4	1.40	1.51	1.10	4.01
4a	20.12	2.01	10.03	32.17
one meter				
1	0.52	3.74	3.98	8.24
2	0.54	11.98	0.43	12.94
3	0.58	3.80	3.74	8.12
4	0.74	0.44	0.26	1.44

50,000 MWD/MTU BW 15x15 4.0 wt% U235 BPRA Curies 331.00
4.0 wt% U235 TP Curies 0.00

8.0 YR		8.0 YR	8.0 YR	8.0 YR			dwg3443				
		h4n5d11m		h4n5d11m		h4p5d11m	4q5d11m	h4c5d11n		num fuel	24
						h4r5d11m					
						h4p5e08m	h4q5e07m				
						h4r5e07m					
		neutron		phot (n,p)		phot		cobalt		total	
		value	rel err	value	rel err	value	rel err	value	rel err	value	rel err
TSAR dose locations											
adjacent											
segs											
1	1	6.35	0.03	0.61	0.03	4.27	0.08	10.71	0.01	21.94	0.02
2	8	1.88	0.04	1.95	0.02	15.93	0.02	0.04	0.46	19.79	0.01
3	1	5.57	0.03	0.25	0.06	6.90	0.06	11.89	0.01	24.62	0.02
4	1	2.89	0.03	1.37	0.03	0.01	0.07	0.20	0.13	4.47	0.02
4a	1	28.44	0.02	0.72	0.04	1.09	0.05	8.71	0.02	38.97	0.02
one meter											
1	1	0.74	0.08	0.28	0.17	2.69	0.08	3.35	0.04	7.07	0.04
2	8	0.76	0.03	0.87	0.02	8.07	0.01	0.36	0.11	10.07	0.01
3	1	0.81	0.07	0.14	0.13	2.98	0.09	3.25	0.03	7.18	0.04
4	1	1.04	0.04	0.42	0.04	0.11	0.05	0.23	0.06	1.79	0.03

adjacent	neutrons	fuel gam	co-60	total
1	6.35	4.87	10.71	21.94
2	1.88	17.87	0.04	19.79
3	5.57	7.15	11.89	24.62
4	2.89	1.38	0.20	4.47
4a	28.44	1.82	8.71	38.97
one meter				
1	0.74	2.97	3.35	7.07
2	0.76	8.95	0.36	10.07
3	0.81	3.12	3.25	7.18
4	1.04	0.52	0.23	1.79

BW 15x15 4.0 wt% U235
52,500 MWD/MTU

10.0 YR		10.0 YR	10.0 YR	10.0 YR			dwg3443			BPRA Curies	331.00
		h4n5d11m		h4n5d11m		h4p5d11m	4q5d11m	h4c5d11n		TP Curies	0.00
						h4r5d11m				num fuel	24
						h4p5e08m	h4q5e07m				
						h4r5e07m					
		neutron		phot (n,p)		phot		cobalt		total	
		value	rel err	value	rel err	value	rel err	value	rel err	value	rel err
TSAR dose locations											
adjacent											
segs											
1	1	7.12	0.03	0.68	0.03	3.50	0.09	8.60	0.01	19.90	0.02
2	8	2.11	0.04	2.18	0.02	12.60	0.02	0.03	0.46	16.92	0.01
3	1	6.25	0.03	0.28	0.06	5.77	0.07	9.98	0.01	22.28	0.02
4	1	3.24	0.03	1.54	0.03	0.01	0.07	0.17	0.13	4.95	0.02
4a	1	31.89	0.02	0.81	0.04	0.87	0.05	7.31	0.02	40.87	0.02
one meter											
1	1	0.83	0.08	0.32	0.17	2.19	0.09	2.69	0.04	6.03	0.04
2	8	0.85	0.03	0.98	0.02	6.39	0.01	0.29	0.12	8.51	0.01
3	1	0.91	0.07	0.16	0.13	2.50	0.09	2.73	0.03	6.30	0.04
4	1	1.17	0.04	0.47	0.04	0.09	0.05	0.19	0.06	1.91	0.03

adjacent	neutrons	fuel gam	co-60	total
1	7.12	4.18	8.60	19.90
2	2.11	14.78	0.03	16.92
3	6.25	6.05	9.98	22.28
4	3.24	1.55	0.17	4.95
4a	31.89	1.68	7.31	40.87
one meter				
1	0.83	2.50	2.69	6.03
2	0.85	7.37	0.29	8.51
3	0.91	2.65	2.73	6.30
4	1.17	0.55	0.19	1.91

BW 15x15 4.0 wt% U235 BPRA Curies 331.00
55,000 MWD/MTU TP Curies 0.00

12.0 YR	12.0 YR h4n5d11m	12.0 YR	12.0 YR h4n5d11m		h4p5d11m h4r5d11m h4p5e08m h4r5e07m	dwg3443 4q5d11m h4q5e07m	h4c5d11n		num fuel	24
	neutron		phot (n,p)		phot		cobalt		total	
	value	rel err	value	rel err	value	rel err	value	rel err	value	rel err
TSAR dose locations										
adjacent										
segs										
1	1	7.89	0.03	0.76	0.03	3.05	0.09	6.88	0.01	18.58	0.02
2	8	2.34	0.04	2.42	0.02	10.69	0.02	0.02	0.46	15.46	0.01
3	1	6.92	0.03	0.31	0.06	5.11	0.07	8.43	0.01	20.78	0.02
4	1	3.59	0.03	1.70	0.03	0.01	0.07	0.14	0.13	5.44	0.02
4a	1	35.34	0.02	0.90	0.04	0.73	0.05	6.17	0.02	43.15	0.02
one meter											
1	1	0.92	0.08	0.35	0.17	1.90	0.10	2.15	0.04	5.32	0.04
2	8	0.94	0.03	1.08	0.02	5.42	0.01	0.24	0.12	7.68	0.01
3	1	1.01	0.07	0.17	0.13	2.22	0.09	2.31	0.03	5.71	0.04
4	1	1.30	0.04	0.52	0.04	0.07	0.05	0.16	0.06	2.05	0.03

adjacent	neutrons	fuel gam	co-60	total
1	7.89	3.81	6.88	18.58
2	2.34	13.10	0.02	15.46
3	6.92	5.42	8.43	20.78
4	3.59	1.71	0.14	5.44
4a	35.34	1.63	6.17	43.15
one meter				
1	0.92	2.25	2.15	5.32
2	0.94	6.50	0.24	7.68
3	1.01	2.39	2.31	5.71
4	1.30	0.59	0.16	2.05

32,500 MWD/MTU burnup - B&W 15x15 fuel element
2.9 w/o U235

										BPRA Curies	331.00
										TP Curies	0.00
5.0 YR		5.0 YR	5.0 YR	5.0 YR			dwg3443				
		h4n5d11m		h4n5d11m		h4p5d11m	4q5d11m	h4c5d11n		num fuel	32
						h4r5d11m					
						h4p5e08m	h4q5e07m				
						h4r5e07m					
		neutron		phot (n,p)		phot		cobalt		total	
		value	rel err	value	rel err	value	rel err	value	rel err	value	rel err
TSAR dose locations											
adjacent											
segs											
1	1	2.90	0.03	0.28	0.03	6.53	0.07	17.01	0.01	26.72	0.02
2	7	0.76	0.04	0.83	0.02	33.09	0.01	0.11	0.41	34.79	0.01
3	1	2.55	0.03	0.11	0.06	9.79	0.06	18.32	0.01	30.77	0.02
4	5	0.91	0.02	0.37	0.02	1.19	0.05	1.47	0.04	3.93	0.02
4a	1	13.00	0.02	0.33	0.04	2.12	0.04	13.42	0.02	28.87	0.01
one meter											
1	1	0.34	0.08	0.13	0.17	4.71	0.06	5.33	0.04	10.50	0.04
2	8	0.35	0.03	0.40	0.02	16.64	0.01	0.57	0.11	17.95	0.01
3	1	0.37	0.07	0.06	0.13	4.58	0.08	5.00	0.03	10.02	0.04
4	6	0.42	0.02	0.12	0.03	0.26	0.05	0.51	0.03	1.32	0.02

adjacent	neutrons	fuel gam	co-60	total
1	2.90	6.80	17.01	26.72
2	0.76	33.92	0.11	34.79
3	2.55	9.90	18.32	30.77
4	0.91	1.56	1.47	3.93
4a	13.00	2.45	13.42	28.87
one meter				
1	0.34	4.84	5.33	10.50
2	0.35	17.04	0.57	17.95
3	0.37	4.64	5.00	10.02
4	0.42	0.39	0.51	1.32

37,500 MWD/MTU burnup - B&W 15x15 fuel element | BPRA Curies 331.00
3.2 w/o U235 | TP Curies 0.00

7.0 YR	7.0 YR	7.0 YR	7.0 YR			dwg3443				
	h4n5d11m		h4n5d11m		h4p5d11m	4q5d11m	h4c5d11n		num fuel	32
					h4r5d11m					
					h4p5e08m	h4q5e07m				
					h4r5e07m					
	neutron		phot (n,p)		phot		cobalt		total	
	value	rel err	value	rel err	value	rel err	value	rel err	value	rel err
TSAR dose locations										
adjacent										
segs										
1	1	4.05	0.03	0.39	0.03	4.91	0.08	14.14	0.01	23.49	0.02
2	7	1.05	0.04	1.16	0.02	19.96	0.02	0.09	0.41	22.26	0.01
3	1	3.55	0.03	0.16	0.06	7.81	0.06	15.73	0.01	27.25	0.02
4	5	1.26	0.02	0.51	0.02	0.85	0.06	1.26	0.04	3.89	0.02
4a	1	18.12	0.02	0.46	0.04	1.33	0.05	11.52	0.02	31.44	0.01
one meter											
1	1	0.47	0.08	0.18	0.17	3.19	0.08	4.43	0.04	8.27	0.04
2	8	0.48	0.03	0.56	0.02	9.96	0.01	0.48	0.11	11.48	0.01
3	1	0.52	0.07	0.09	0.13	3.42	0.09	4.30	0.03	8.33	0.04
4	6	0.58	0.02	0.17	0.03	0.18	0.06	0.44	0.03	1.37	0.02

adjacent	neutrons	fuel gam	co-60	total
1	4.05	5.30	14.14	23.49
2	1.05	21.11	0.09	22.26
3	3.55	7.97	15.73	27.25
4	1.26	1.36	1.26	3.89
4a	18.12	1.79	11.52	31.44
one meter				
1	0.47	3.37	4.43	8.27
2	0.48	10.51	0.48	11.48
3	0.52	3.51	4.30	8.33
4	0.58	0.35	0.44	1.37

45,000 MWD/MTU BW 15x15 4.0 wt% U235 BPRA Curies 331.00
4.0 wt% U235 TP Curies 0.00
8.0 YR 8.0 YR 8.0 YR 8.0 YR dwg3443
h4n5d11m h4n5d11m h4p5d11m 4q5d11m h4c5d11n num fuel 32
h4r5d11m
h4p5e08m h4q5e07m
h4r5e07m

		neutron		phot (n,p)		phot		cobalt		total	
		value	rel err	value	rel err	value	rel err	value	rel err	value	rel err
TSAR dose locations											
adjacent											
segs											
1	1	5.56	0.03	0.53	0.03	5.04	0.08	13.03	0.01	24.17	0.02
2	7	1.45	0.04	1.59	0.02	19.26	0.02	0.08	0.41	22.38	0.02
3	1	4.88	0.03	0.22	0.06	8.16	0.06	14.73	0.01	27.98	0.02
4	5	1.74	0.02	0.70	0.02	0.86	0.06	1.18	0.03	4.47	0.02
4a	1	24.90	0.02	0.63	0.04	1.29	0.05	10.79	0.02	37.62	0.02
one meter											
1	1	0.65	0.08	0.25	0.17	3.19	0.09	4.08	0.04	8.17	0.04
2	8	0.66	0.03	0.76	0.02	9.60	0.01	0.44	0.12	11.47	0.01
3	1	0.71	0.07	0.12	0.13	3.53	0.09	4.03	0.03	8.39	0.04
4	1	0.91	0.04	0.36	0.04	0.13	0.05	0.28	0.06	1.69	0.03

adjacent	neutrons	fuel gam	co-60	total
1	5.56	5.57	13.03	24.17
2	1.45	20.85	0.08	22.38
3	4.88	8.38	14.73	27.98
4	1.74	1.56	1.18	4.47
4a	24.90	1.93	10.79	37.62
one meter				
1	0.65	3.44	4.08	8.17
2	0.66	10.36	0.44	11.47
3	0.71	3.65	4.03	8.39
4	0.91	0.49	0.28	1.69

Appendix B: Bounding Burnup and Cooling Time for the 125-ton HI-TRAC

This appendix determines the bounding MPC with the bounding burnup and cooling time for the HI-TRAC analysis.

The following burnup and cooling times were analyzed from the allowable burnup and cooling times. The enrichment used for the analysis is also shown.

MPC	Burnup (MWD/MTU)	Cooling Time (years)	Enrichment (wt.% ^{235}U)
24	41,500	5	3.4
24	45,000	6	4.0
24	50,000	8	4.0
24	52,500	10	4.0
24	55,000	12	4.0
24	60,000	15	4.5
32	32,500	5	2.9
32	45,000	8	4.0
32	47,500	15	3.6

The second to last burnup and cooling time for the MPC-32 has a conservatively higher burnup for the allowable cooling time of 8 years.

The results presented on the pages that follow are summary results from EXCEL for the dose rate on the surface and one meter away from the side and top of the overpack. The dose locations are described below. A brief description of the format of these pages can be found in Appendix D. The segments listed are the segments on the MCNP surfaces that give the highest dose rate. Appendix J provides a detailed description of the dose locations and presents detailed results for the bounding burnup and cooling time.

The design basis MPC and burnup and cooling time was based on a comparison of the radial dose rates along the outer surface of the HI-TRAC. The combination that had the highest dose rate at the midplane of the cask was chosen as the bounding condition. These results indicate that the bounding MPC is the MPC-24 with a burnup and cooling time of 55,000 MWD/MTU and 12 year cooling. This combination had the highest dose rate on the radial surface of the cask at the midplane while a couple of the other dose locations are slightly higher at other burnup and cooling times.

Dose Locations

Adjacent/ Surface of HI-TRAC	
817	Next to lower water jacket
825	Outer surface of water jacket at peak dose location
(830 831)	Next to lifting trunnion in water jacket cutout area
832	Above water jacket and below top forge
One Meter from HI-TRAC	
829 segment 10	1 meter from outer water jacket at axial height of lower water jacket
829 other segment	1 meter from outer water jacket at peak dose location
(1829 2829)	Next to lifting trunnion in water jacket cutout area at distance of 1 meter from water jacket
829 segment 29	1 meter from water jacket at axial height above water jacket and below top forging

41,500 MWD/MTU burnup - B&W 15x15 fuel element BPRA curies 331.000
3.4 w/o U235

5.0 YR	5.0 YR	5.0 YR	5.0 YR			side125t				num fuel	24
	u4n5a02m		u4n5a02m		u4p5a02m	u4q5a02m	u4c5a02m				
	neutron		phot (n,p)		phot		cobalt			total	
	value	rel err	value	rel err	value	rel err	value	rel err		value	rel err
adjacent dose rates											
surf seg											
817	74.68	0.02	13.01	0.02	5.26	0.03	77.77	0.01		170.72	0.01
825 19	49.33	0.02	34.97	0.01	69.34	0.02	0.01	0.24		153.64	0.01
(830 831)	232.37	0.04	4.59	0.11	2.18	0.12	115.50	0.02		354.64	0.03
832	146.10	0.02	2.35	0.07	1.01	0.07	46.45	0.01		195.91	0.01
one meter dose rates											
829 10	11.26	0.03	4.76	0.02	9.62	0.02	8.67	0.01		34.30	0.01
829 18	17.70	0.02	11.20	0.01	32.02	0.01	0.60	0.01		61.51	0.01
(1829 2829)	11.18	0.10	2.93	0.09	6.40	0.07	11.22	0.02		31.73	0.04
829 29	9.42	0.03	3.00	0.03	5.36	0.02	7.30	0.03		25.07	0.02

adjacent	neutrons	fuel gam	co-60	total
817	74.68	18.27	77.77	170.72
825 19	49.33	104.31	0.01	153.64
(830 831)	232.37	6.77	115.50	354.64
832	146.10	3.36	46.45	195.91
one meter				
829 10	11.26	14.37	8.67	34.30
829 18	17.70	43.21	0.60	61.51
(1829 2829)	11.18	9.33	11.22	31.73
829 29	9.42	8.35	7.30	25.07

45,000 MWD/MTU BW 15x15 4.0 wt% U235 BPRA curies 331.000
4.0 wt% U235

6.0 YR		6.0 YR	6.0 YR	6.0 YR		side125t				num fuel	24
		u4n5a02m		u4n5a02m		u4p5a02m	u4q5a02m	u4c5a02m			
		neutron		phot (n,p)		phot		cobalt		total	
		value	rel err	value	rel err	value	rel err	value	rel err	value	rel err
adjacent dose rates											
surf	seg										
817		76.08	0.02	13.25	0.02	3.87	0.04	67.38	0.01	160.58	0.01
825	19	50.25	0.02	35.62	0.01	52.18	0.02	0.01	0.24	138.05	0.01
(830 831)		236.71	0.04	4.68	0.11	1.57	0.14	102.17	0.02	345.13	0.03
832		148.83	0.02	2.40	0.07	0.71	0.08	41.09	0.01	193.03	0.01
one meter dose rates											
829	10	11.47	0.03	4.84	0.02	7.23	0.02	7.51	0.01	31.05	0.01
829	18	18.03	0.02	11.40	0.01	24.11	0.02	0.52	0.01	54.06	0.01
(1829 2829)		11.39	0.10	2.98	0.09	4.79	0.08	9.94	0.02	29.10	0.04
829	29	9.59	0.03	3.05	0.03	4.01	0.03	6.47	0.03	23.13	0.02

adjacent		neutrons	fuel gam	co-60	total
817		76.08	17.12	67.38	160.58
825	19	50.25	87.79	0.01	138.05
(830 831)		236.71	6.25	102.17	345.13
832		148.83	3.10	41.09	193.03
one meter					
829	10	11.47	12.07	7.51	31.05
829	18	18.03	35.51	0.52	54.06
(1829 2829)		11.39	7.77	9.94	29.10
829	29	9.59	7.07	6.47	23.13

50,000 MWD/MTU BW 15x15 4.0 wt% U235 BPRA curies 331.000
4.0 wt% U235

8.0 YR	8.0 YR	8.0 YR	8.0 YR			side125t				num fuel	24
	u4n5a02m		u4n5a02m		u4p5a02m	u4q5a02m	u4c5a02m				
	neutron		phot (n,p)		phot		cobalt			total	
	value	rel err	value	rel err	value	rel err	value	rel err		value	rel err
adjacent dose rates											
surf seg											
817	107.52	0.02	18.73	0.02	2.73	0.04	56.81	0.01		185.79	0.01
825 19	71.02	0.02	50.34	0.01	37.88	0.03	0.01	0.24		159.25	0.01
(830 831)	334.56	0.04	6.61	0.11	1.06	0.16	88.62	0.02		430.85	0.03
832	210.35	0.02	3.39	0.07	0.48	0.10	35.64	0.01		249.86	0.01
one meter dose rates											
829 10	16.21	0.03	6.85	0.02	5.24	0.02	6.33	0.01		34.62	0.02
829 18	25.48	0.02	16.12	0.01	17.49	0.02	0.44	0.01		59.53	0.01
(1829 2829)	16.10	0.10	4.21	0.09	3.44	0.09	8.64	0.02		32.40	0.05
829 29	13.56	0.03	4.32	0.03	2.89	0.03	5.62	0.03		26.39	0.02

adjacent	neutrons	fuel gam	co-60	total
817	107.52	21.46	56.81	185.79
825 19	71.02	88.22	0.01	159.25
(830 831)	334.56	7.68	88.62	430.85
832	210.35	3.87	35.64	249.86
one meter				
829 10	16.21	12.08	6.33	34.62
829 18	25.48	33.61	0.44	59.53
(1829 2829)	16.10	7.66	8.64	32.40
829 29	13.56	7.21	5.62	26.39

BW 15x15 4.0 wt% U235 BPRA curies 331.000
52,500 MWD/MTU

10.0 YR		10.0 YR	10.0 YR	10.0 YR		side125t				num fuel	24
		u4n5a02m		u4n5a02m		u4p5a02m	u4q5a02m	u4c5a02m			
		neutron		phot (n,p)		phot		cobalt		total	
		value	rel err	value	rel err	value	rel err	value	rel err	value	rel err
adjacent dose rates											
surf	seg										
817		120.54	0.02	21.00	0.02	2.18	0.04	45.59	0.01	189.32	0.02
825	19	79.63	0.02	56.44	0.01	30.54	0.03	0.00	0.24	166.61	0.01
(830 831)		375.10	0.04	7.42	0.11	0.82	0.16	74.23	0.02	457.57	0.03
832		235.84	0.02	3.80	0.07	0.38	0.10	29.86	0.01	269.88	0.01
one meter dose rates											
829	10	18.17	0.03	7.68	0.02	4.22	0.03	5.08	0.01	35.15	0.02
829	18	28.57	0.02	18.07	0.01	14.08	0.02	0.36	0.01	61.08	0.01
(1829 2829)		18.05	0.10	4.72	0.09	2.76	0.09	7.26	0.02	32.80	0.06
829	29	15.20	0.03	4.84	0.03	2.32	0.03	4.73	0.03	27.09	0.02

adjacent		neutrons	fuel gam	co-60	total
817		120.54	23.18	45.59	189.32
825	19	79.63	86.99	0.00	166.61
(830 831)		375.10	8.24	74.23	457.57
832		235.84	4.18	29.86	269.88
one meter					
829	10	18.17	11.89	5.08	35.15
829	18	28.57	32.15	0.36	61.08
(1829 2829)		18.05	7.48	7.26	32.80
829	29	15.20	7.16	4.73	27.09

BW 15x15 4.0 wt% U235 BPRA curies 331.000
55,000 MWD/MTU

12.0 YR	12.0 YR	12.0 YR	12.0 YR			side125t				num fuel	24
	u4n5a02m		u4n5a02m		u4p5a02m		u4q5a02m		u4c5a02m		
	neutron		phot (n,p)		phot				cobalt		total
	value	rel err	value	rel err	value	rel err			value	rel err	value	rel err
adjacent dose rates											
surf seg											
817	133.59	0.02	23.28	0.02	1.86	0.04	36.49	0.01	195.23	0.02
825 19	88.25	0.02	62.56	0.01	26.22	0.03	0.00	0.24	177.04	0.01
(830 831)	415.72	0.04	8.22	0.11	0.69	0.16	62.56	0.02	487.19	0.03
832	261.38	0.02	4.21	0.07	0.33	0.11	25.17	0.01	291.09	0.01
one meter dose rates										
829 10	20.14	0.03	8.51	0.02	3.62	0.03	4.07	0.01	36.34	0.02
829 18	31.66	0.02	20.03	0.01	12.07	0.02	0.29	0.01	64.05	0.01
(1829 2829)	20.00	0.10	5.24	0.09	2.36	0.09	6.14	0.02	33.74	0.06
829 29	16.85	0.03	5.36	0.03	1.99	0.03	4.00	0.03	28.20	0.02

adjacent	neutrons	fuel gam	co-60	total
817	133.59	25.14	36.49	195.23
825 19	88.25	88.78	0.00	177.04
(830 831)	415.72	8.91	62.56	487.19
832	261.38	4.54	25.17	291.09
one meter				
829 10	20.14	12.13	4.07	36.34
829 18	31.66	32.10	0.29	64.05
(1829 2829)	20.00	7.60	6.14	33.74
829 29	16.85	7.35	4.00	28.20

BW 15x15 4.5 wt% U235
60,000 MWD/MTU

BPRA curies 331.000

num fuel 24

15.0 YR	15.0 YR	15.0 YR	15.0 YR			side125t					
	u4n5a02m		u4n5a02m		u4p5a02m	u4q5a02m	u4c5a02m				
	neutron		phot (n,p)		phot		cobalt		total		
	value	rel err	value	rel err	value	rel err	value	rel err	value	rel err
adjacent dose rates										
surf seg										
817	136.11	0.02	23.71	0.02	1.57	0.04	25.00	0.01	186.40	0.02
825 19	89.91	0.02	63.73	0.01	22.12	0.03	0.00	0.24	175.76	0.01
(830 831)	423.53	0.04	8.37	0.11	0.57	0.16	47.82	0.02	480.30	0.04
832	266.29	0.02	4.29	0.07	0.28	0.11	19.25	0.01	290.11	0.02
one meter dose rates										
829 10	20.52	0.03	8.67	0.02	3.05	0.03	2.79	0.01	35.03	0.02
829 18	32.26	0.02	20.41	0.01	10.17	0.02	0.20	0.01	63.04	0.01
(1829 2829)	20.38	0.10	5.33	0.09	1.99	0.09	4.73	0.02	32.43	0.07
829 29	17.16	0.03	5.46	0.03	1.68	0.03	3.09	0.03	27.39	0.02

adjacent	neutrons	fuel gam	co-60	total
817	136.11	25.28	25.00	186.40
825 19	89.91	85.85	0.00	175.76
(830 831)	423.53	8.95	47.82	480.30
832	266.29	4.57	19.25	290.11
one meter				
829 10	20.52	11.72	2.79	35.03
829 18	32.26	30.58	0.20	63.04
(1829 2829)	20.38	7.32	4.73	32.43
829 29	17.16	7.14	3.09	27.39

32,500 MWD/MTU burnup - B&W 15x15 fuel element BPRA curies 331.000
2.9 w/o U235

5.0 YR		5.0 YR	5.0 YR	5.0 YR		side125t				num fuel	32
		u4n5a02m		u4n5a02m		u4p5a02m	u4q5a02m	u4c5a02m			
		neutron		phot (n,p)		phot		cobalt		total	
		value	rel err	value	rel err	value	rel err	value	rel err	value	rel err
adjacent dose rates											
surf	seg										
817		49.14	0.02	8.56	0.02	5.82	0.03	90.21	0.01	153.73	0.01
825	18	30.74	0.02	23.16	0.01	78.11	0.02	0.01	0.21	132.02	0.01
(830 831)		152.87	0.04	3.02	0.11	2.40	0.12	136.70	0.02	295.00	0.02
832		96.12	0.02	1.55	0.07	1.13	0.07	54.98	0.01	153.78	0.01
one meter dose rates											
829	10	7.41	0.03	3.13	0.02	10.59	0.02	10.05	0.01	31.18	0.01
829	18	11.65	0.02	7.36	0.01	35.22	0.01	0.70	0.01	54.92	0.01
(1829 2829)		7.36	0.10	1.92	0.09	7.05	0.07	13.30	0.02	29.64	0.03
829	29	6.20	0.03	1.97	0.03	5.89	0.02	8.65	0.03	22.71	0.01

adjacent		neutrons	fuel gam	co-60	total
817		49.14	14.38	90.21	153.73
825	18	30.74	101.26	0.01	132.02
(830 831)		152.87	5.42	136.70	295.00
832		96.12	2.68	54.98	153.78
one meter					
829	10	7.41	13.72	10.05	31.18
829	18	11.65	42.58	0.70	54.92
(1829 2829)		7.36	8.97	13.30	29.64
829	29	6.20	7.87	8.65	22.71

45,000 MWD/MTU BW 15x15 4.0 wt% U235 BPRA curies 331.000
4.0 wt% U235

8.0 YR		8.0 YR	8.0 YR	8.0 YR		side125t				num fuel	32
		u4n5a02m		u4n5a02m		u4p5a02m	u4q5a02m	u4c5a02m			
		neutron		phot (n,p)		phot		cobalt		total	
		value	rel err	value	rel err	value	rel err	value	rel err	value	rel err
adjacent dose rates											
surf	seg										
817		94.13	0.02	16.40	0.02	3.25	0.04	69.13	0.01	182.91	0.01
825	19	62.18	0.02	44.06	0.01	45.15	0.03	0.01	0.24	151.40	0.01
(830 831)		292.87	0.04	5.79	0.11	1.26	0.16	109.67	0.02	409.59	0.03
832		184.14	0.02	2.97	0.07	0.57	0.10	44.11	0.01	231.79	0.01
one meter dose rates											
829	10	14.19	0.03	5.99	0.02	6.24	0.02	7.71	0.01	34.13	0.01
829	18	22.31	0.02	14.11	0.01	20.84	0.02	0.54	0.01	57.80	0.01
(1829 2829)		14.09	0.10	3.69	0.09	4.10	0.09	10.71	0.02	32.59	0.05
829	29	11.87	0.03	3.78	0.03	3.45	0.03	6.97	0.03	26.06	0.02

adjacent		neutrons	fuel gam	co-60	total
817		94.13	19.65	69.13	182.91
825	19	62.18	89.21	0.01	151.40
(830 831)		292.87	7.05	109.67	409.59
832		184.14	3.54	44.11	231.79
one meter					
829	10	14.19	12.23	7.71	34.13
829	18	22.31	34.95	0.54	57.80
(1829 2829)		14.09	7.79	10.71	32.59
829	29	11.87	7.22	6.97	26.06

47,500 MWD/MTU burnup - B&W 15x15 fuel element BPRA curies 331.000
3.6 w/o U235

15.0 YR	15.0 YR	15.0 YR	15.0 YR			side125t				num fuel	32
	u4n5a02m		u4n5a02m		u4p5a02m	u4q5a02m	u4c5a02m				
	neutron		phot (n,p)		phot		cobalt			total	
	value	rel err	value	rel err	value	rel err	value	rel err		value	rel err
adjacent dose rates											
surf seg											
817	106.73	0.02	18.59	0.02	1.72	0.05	30.40	0.01		157.44	0.02
825 19	70.50	0.02	49.96	0.01	24.34	0.03	0.00	0.24		144.80	0.01
(830 831)	332.06	0.04	6.56	0.11	0.63	0.17	59.99	0.02		399.24	0.03
832	208.78	0.02	3.36	0.07	0.30	0.11	24.15	0.01		236.60	0.01
one meter dose rates											
829 10	16.09	0.03	6.80	0.02	3.36	0.03	3.39	0.01		29.63	0.02
829 18	25.30	0.02	16.00	0.01	11.19	0.02	0.25	0.01		52.73	0.01
(1829 2829)	15.98	0.10	4.18	0.09	2.19	0.09	5.94	0.02		28.29	0.06
829 29	13.46	0.03	4.28	0.03	1.84	0.03	3.88	0.03		23.46	0.02

adjacent	neutrons	fuel gam	co-60	total
817	106.73	20.31	30.40	157.44
825 19	70.50	74.30	0.00	144.80
(830 831)	332.06	7.19	59.99	399.24
832	208.78	3.67	24.15	236.60
one meter				
829 10	16.09	10.15	3.39	29.63
829 18	25.30	27.19	0.25	52.73
(1829 2829)	15.98	6.37	5.94	28.29
829 29	13.46	6.12	3.88	23.46

Appendix C: Source Terms

Table 1 shows the fuel characteristics that were used in generating the source terms [4]. Table 2 shows the characteristics of the BPRA [10]. The calculation of the BPRA source is described in reference [14].

Table 1: Fuel Assembly Parameters for Source Term Calculation

Assembly type	B&W 15x15
Active fuel length (in.)	144
No. of fuel rods	208
Rod Pitch (in.)	0.568
Cladding material	Zircaloy-4
Rod diameter (in.)	0.428
Cladding thickness (in.)	0.0230
Pellet diameter (in.)	0.3742
Pellet material	UO_2
Pellet density (gm/cc)	10.412 (95% of theoretical)
Enrichment (wt.% ^{235}U)	2.9 and 4.0
Burnup (MWD/MTU)	32,500 and 55,000
Cooling time (years)	5 to 20
Specific power (MW/MTU)	40

Table 2: Physical Characteristics of BPRA

Region	Mass of material (kg)
Upper end fitting (steel)	2.62
Upper end fitting (inconel)	0.42
Gas plenum spacer (steel)	0.77488
Gas plenum springs (steel)	0.67512
In-core (steel)	13.2

The enrichments that were chosen for this analysis were based on a review of the Diablo Canyon inventory provided in reference [5]. Table 3 shows the average enrichment and median enrichment for different burnup ranges based on the inventory.

Table 3: Enrichments for Various Ranges for Fuel in Diablo Canyon Spent Fuel Pool

Burnup Range GWD/MTU	Average Burnup MWD/MTU	Average Enrichment wt% U235	Median Enrichment wt% U235	Number of Assemblies
15 to 20	17711.10	2.111	2.097	102
20 to 25	22320.33	2.230	2.123	36
25 to 30	27644.82	2.845	2.615	71
30 to 35	32702.12	3.015	3.091	172
35 to 40	37013.26	3.654	3.419	311
40 to 45	42656.28	4.102	4.007	358
45 to 50	46831.56	4.337	4.397	355
50 to 55	51210.40	4.186	4.396	70
55 to 60	55735.82	3.998	3.998	1

Pages C-3 through C-5 show the neutron and gamma source term for 32,500 MWD/MTU.
Pages C-6 through C-8 show the neutron and gamma source term for 55,000 MWD/MTU.
Pages C-9 and C-10 show the cobalt-60 source in the non-fuel hardware for a burnup of 32,500 MWD/MTU.
Pages C-11 and C-12 show the cobalt-60 source in the non-fuel hardware for a burnup of 55,000 MWD/MTU.
Page C-13 shows the cobalt-60 source for the BPRA at a burnup of 40,000 MWD/MTU.

32,500 MWD/MTU burnup - B&W 15x15 fuel element
2.9 w/o U235

NEUTRON GROUP STRUCTURE

1	6.43E+00	-	2.00E+01
2	3.00E+00	-	6.43E+00
3	1.85E+00	-	3.00E+00
4	1.40E+00	-	1.85E+00
5	9.00E-01	-	1.40E+00
6	4.00E-01	-	9.00E-01
7	1.00E-01	-	4.00E-01

PHOTON GROUP STRUCTURE

18	1.0000E-02	TO	2.0000E-02
17	2.0000E-02	TO	3.0000E-02
16	3.0000E-02	TO	4.5000E-02
15	4.5000E-02	TO	7.0000E-02
14	7.0000E-02	TO	1.0000E-01
13	1.0000E-01	TO	1.5000E-01
12	1.5000E-01	TO	3.0000E-01
11	3.0000E-01	TO	4.5000E-01
10	4.5000E-01	TO	7.0000E-01
9	7.0000E-01	TO	1.0000E+00
8	1.0000E+00	TO	1.5000E+00
7	1.5000E+00	TO	2.0000E+00
6	2.0000E+00	TO	2.5000E+00
5	2.5000E+00	TO	3.0000E+00
4	3.0000E+00	TO	4.0000E+00
3	4.0000E+00	TO	6.0000E+00
2	6.0000E+00	TO	8.0000E+00
1	8.0000E+00	TO	1.1000E+01

NEUTRON SPECTRUM

	3.0 YR	4.0 YR	5.0 YR	6.0 YR	7.0 YR	8.0 YR	9.0 YR
1	3.373E+06	3.232E+06	3.108E+06	2.993E+06	2.882E+06	2.775E+06	2.673E+06
2	3.826E+07	3.661E+07	3.523E+07	3.394E+07	3.271E+07	3.153E+07	3.039E+07
3	4.227E+07	4.051E+07	3.902E+07	3.764E+07	3.632E+07	3.505E+07	3.382E+07
4	2.382E+07	2.284E+07	2.199E+07	2.118E+07	2.042E+07	1.968E+07	1.897E+07
5	3.225E+07	3.091E+07	2.975E+07	2.865E+07	2.760E+07	2.659E+07	2.561E+07
6	3.519E+07	3.372E+07	3.244E+07	3.123E+07	3.008E+07	2.897E+07	2.790E+07
7	6.889E+06	6.601E+06	6.350E+06	6.114E+06	5.888E+06	5.670E+06	5.461E+06
TOT	1.821E+08	1.744E+08	1.679E+08	1.617E+08	1.559E+08	1.503E+08	1.448E+08

	10.0 YR	11.0 YR	12.0 YR	13.0 YR	14.0 YR	15.0 YR	16.0 YR
1	2.574E+06	2.479E+06	2.388E+06	2.300E+06	2.215E+06	2.134E+06	2.056E+06
2	2.930E+07	2.825E+07	2.723E+07	2.626E+07	2.532E+07	2.441E+07	2.354E+07
3	3.265E+07	3.151E+07	3.042E+07	2.937E+07	2.836E+07	2.739E+07	2.645E+07
4	1.829E+07	1.764E+07	1.701E+07	1.640E+07	1.581E+07	1.525E+07	1.471E+07
5	2.468E+07	2.378E+07	2.291E+07	2.208E+07	2.128E+07	2.051E+07	1.976E+07
6	2.688E+07	2.589E+07	2.494E+07	2.402E+07	2.314E+07	2.230E+07	2.148E+07
7	5.260E+06	5.067E+06	4.881E+06	4.702E+06	4.529E+06	4.363E+06	4.203E+06
TOT	1.396E+08	1.346E+08	1.298E+08	1.251E+08	1.207E+08	1.164E+08	1.122E+08

	17.0 YR	18.0 YR	19.0 YR	20.0 YR
1	1.980E+06	1.908E+06	1.838E+06	1.771E+06
2	2.271E+07	2.190E+07	2.113E+07	2.038E+07
3	2.555E+07	2.468E+07	2.384E+07	2.304E+07
4	1.419E+07	1.368E+07	1.320E+07	1.274E+07
5	1.905E+07	1.836E+07	1.770E+07	1.706E+07
6	2.069E+07	1.994E+07	1.921E+07	1.851E+07
7	4.050E+06	3.902E+06	3.760E+06	3.623E+06
TOT	1.082E+08	1.044E+08	1.007E+08	9.712E+07

GAMMA SPECTRUM

	3.0 YR	4.0 YR	5.0 YR	6.0 YR	7.0 YR	8.0 YR	9.0 YR
18	1.374E+15	8.482E+14	6.009E+14	4.798E+14	4.172E+14	3.820E+14	3.602E+14
17	8.132E+14	5.039E+14	3.549E+14	2.795E+14	2.388E+14	2.149E+14	1.994E+14
16	9.351E+14	5.856E+14	4.237E+14	3.449E+14	3.036E+14	2.796E+14	2.638E+14
15	6.621E+14	4.030E+14	2.820E+14	2.238E+14	1.944E+14	1.785E+14	1.691E+14
14	5.035E+14	2.956E+14	1.991E+14	1.527E+14	1.291E+14	1.162E+14	1.083E+14
13	6.170E+14	3.434E+14	2.202E+14	1.628E+14	1.344E+14	1.190E+14	1.096E+14
12	4.614E+14	2.692E+14	1.791E+14	1.355E+14	1.134E+14	1.014E+14	9.426E+13
11	2.512E+14	1.475E+14	9.721E+13	7.166E+13	5.789E+13	4.991E+13	4.487E+13
10	3.728E+15	3.018E+15	2.562E+15	2.255E+15	2.041E+15	1.885E+15	1.767E+15
9	1.037E+15	7.347E+14	5.282E+14	3.844E+14	2.829E+14	2.105E+14	1.587E+14
8	1.630E+14	1.143E+14	8.533E+13	6.703E+13	5.478E+13	4.611E+13	3.970E+13
7	1.354E+13	7.279E+12	4.294E+12	2.827E+12	2.074E+12	1.663E+12	1.418E+12
6	1.547E+13	6.621E+12	2.855E+12	1.242E+12	5.462E+11	2.436E+11	1.108E+11
5	3.422E+11	1.721E+11	8.670E+10	4.374E+10	2.212E+10	1.122E+10	5.729E+09
4	4.205E+10	2.128E+10	1.078E+10	5.461E+09	2.771E+09	1.409E+09	7.198E+08
3	7.848E+06	7.515E+06	7.228E+06	6.960E+06	6.702E+06	6.455E+06	6.218E+06
2	9.038E+05	8.655E+05	8.324E+05	8.015E+05	7.719E+05	7.434E+05	7.160E+05
1	1.040E+05	9.955E+04	9.575E+04	9.219E+04	8.878E+04	8.550E+04	8.236E+04
TOT	1.058E+16	7.277E+15	5.540E+15	4.562E+15	3.970E+15	3.585E+15	3.316E+15

	10.0 YR	11.0 YR	12.0 YR	13.0 YR	14.0 YR	15.0 YR	16.0 YR
18	3.449E+14	3.331E+14	3.232E+14	3.143E+14	3.062E+14	2.986E+14	2.914E+14
17	1.883E+14	1.798E+14	1.728E+14	1.668E+14	1.614E+14	1.565E+14	1.520E+14
16	2.522E+14	2.428E+14	2.346E+14	2.273E+14	2.205E+14	2.142E+14	2.082E+14
15	1.628E+14	1.582E+14	1.544E+14	1.511E+14	1.480E+14	1.452E+14	1.425E+14
14	1.029E+14	9.882E+13	9.541E+13	9.240E+13	8.966E+13	8.709E+13	8.468E+13
13	1.031E+14	9.812E+13	9.389E+13	9.014E+13	8.672E+13	8.354E+13	8.056E+13
12	8.945E+13	8.584E+13	8.287E+13	8.027E+13	7.790E+13	7.569E+13	7.359E+13
11	4.142E+13	3.886E+13	3.684E+13	3.518E+13	3.375E+13	3.250E+13	3.138E+13
10	1.674E+15	1.599E+15	1.537E+15	1.483E+15	1.436E+15	1.394E+15	1.356E+15
9	1.212E+14	9.400E+13	7.412E+13	5.948E+13	4.860E+13	4.045E+13	3.427E+13
8	3.476E+13	3.084E+13	2.764E+13	2.496E+13	2.268E+13	2.071E+13	1.898E+13
7	1.257E+12	1.140E+12	1.046E+12	9.674E+11	8.981E+11	8.358E+11	7.790E+11
6	5.192E+10	2.554E+10	1.356E+10	8.049E+09	5.459E+09	4.209E+09	3.580E+09
5	2.958E+09	1.560E+09	8.549E+08	4.988E+08	3.190E+08	2.280E+08	1.818E+08
4	3.708E+08	1.940E+08	1.043E+08	5.870E+07	3.541E+07	2.342E+07	1.715E+07
3	5.989E+06	5.769E+06	5.557E+06	5.354E+06	5.157E+06	4.969E+06	4.787E+06
2	6.897E+05	6.643E+05	6.399E+05	6.164E+05	5.938E+05	5.721E+05	5.512E+05
1	7.932E+04	7.641E+04	7.360E+04	7.090E+04	6.830E+04	6.580E+04	6.339E+04
TOT	3.117E+15	2.961E+15	2.834E+15	2.726E+15	2.633E+15	2.550E+15	2.474E+15

	17.0 YR	18.0 YR	19.0 YR	20.0 YR
18	2.844E+14	2.777E+14	2.712E+14	2.649E+14
17	1.478E+14	1.438E+14	1.400E+14	1.364E+14
16	2.024E+14	1.970E+14	1.917E+14	1.866E+14
15	1.399E+14	1.374E+14	1.349E+14	1.326E+14
14	8.237E+13	8.016E+13	7.804E+13	7.600E+13
13	7.775E+13	7.509E+13	7.256E+13	7.016E+13
12	7.158E+13	6.965E+13	6.780E+13	6.601E+13
11	3.036E+13	2.942E+13	2.855E+13	2.773E+13
10	1.320E+15	1.286E+15	1.254E+15	1.224E+15
9	2.951E+13	2.580E+13	2.287E+13	2.050E+13
8	1.745E+13	1.608E+13	1.485E+13	1.374E+13
7	7.269E+11	6.788E+11	6.344E+11	5.932E+11
6	3.242E+09	3.043E+09	2.911E+09	2.811E+09
5	1.580E+08	1.456E+08	1.388E+08	1.349E+08
4	1.378E+07	1.190E+07	1.076E+07	1.002E+07
3	4.612E+06	4.444E+06	4.282E+06	4.126E+06
2	5.310E+05	5.116E+05	4.930E+05	4.750E+05
1	6.107E+04	5.884E+04	5.669E+04	5.463E+04
TOT	2.404E+15	2.339E+15	2.277E+15	2.219E+15

GAMMA SPECTRUM - MEV/SEC

	3.0 YR	4.0 YR	5.0 YR	6.0 YR	7.0 YR	8.0 YR	9.0 YR
18	2.060E+13	1.272E+13	9.013E+12	7.198E+12	6.258E+12	5.731E+12	5.403E+12
17	2.033E+13	1.260E+13	8.873E+12	6.989E+12	5.970E+12	5.371E+12	4.984E+12
16	3.507E+13	2.196E+13	1.589E+13	1.293E+13	1.138E+13	1.048E+13	9.893E+12
15	3.807E+13	2.317E+13	1.622E+13	1.287E+13	1.117E+13	1.026E+13	9.721E+12
14	4.280E+13	2.513E+13	1.692E+13	1.298E+13	1.097E+13	9.875E+12	9.206E+12
13	7.712E+13	4.292E+13	2.753E+13	2.035E+13	1.679E+13	1.487E+13	1.370E+13
12	1.038E+14	6.056E+13	4.030E+13	3.049E+13	2.552E+13	2.282E+13	2.121E+13
11	9.421E+13	5.533E+13	3.645E+13	2.687E+13	2.171E+13	1.871E+13	1.683E+13
10	2.144E+15	1.735E+15	1.473E+15	1.297E+15	1.173E+15	1.084E+15	1.016E+15
9	8.818E+14	6.245E+14	4.490E+14	3.267E+14	2.404E+14	1.789E+14	1.349E+14
8	2.038E+14	1.429E+14	1.067E+14	8.379E+13	6.847E+13	5.764E+13	4.962E+13
7	2.370E+13	1.274E+13	7.514E+12	4.947E+12	3.630E+12	2.911E+12	2.482E+12
6	3.481E+13	1.490E+13	6.424E+12	2.795E+12	1.229E+12	5.481E+11	2.493E+11
5	9.411E+11	4.734E+11	2.384E+11	1.203E+11	6.082E+10	3.086E+10	1.575E+10
4	1.472E+11	7.450E+10	3.772E+10	1.911E+10	9.697E+09	4.931E+09	2.519E+09
3	3.924E+07	3.758E+07	3.614E+07	3.480E+07	3.351E+07	3.228E+07	3.109E+07
2	6.327E+06	6.058E+06	5.827E+06	5.610E+06	5.403E+06	5.204E+06	5.012E+06
1	9.876E+05	9.458E+05	9.096E+05	8.758E+05	8.434E+05	8.123E+05	7.824E+05
TOT	3.721E+15	2.785E+15	2.214E+15	1.846E+15	1.597E+15	1.422E+15	1.294E+15

	10.0 YR	11.0 YR	12.0 YR	13.0 YR	14.0 YR	15.0 YR	16.0 YR
18	5.174E+12	4.996E+12	4.847E+12	4.715E+12	4.593E+12	4.479E+12	4.370E+12
17	4.708E+12	4.495E+12	4.320E+12	4.169E+12	4.035E+12	3.913E+12	3.800E+12
16	9.457E+12	9.104E+12	8.799E+12	8.524E+12	8.270E+12	8.032E+12	7.806E+12
15	9.362E+12	9.095E+12	8.876E+12	8.686E+12	8.512E+12	8.348E+12	8.193E+12
14	8.749E+12	8.400E+12	8.110E+12	7.854E+12	7.621E+12	7.403E+12	7.197E+12
13	1.289E+13	1.226E+13	1.174E+13	1.127E+13	1.084E+13	1.044E+13	1.007E+13
12	2.013E+13	1.931E+13	1.865E+13	1.806E+13	1.753E+13	1.703E+13	1.656E+13
11	1.553E+13	1.457E+13	1.382E+13	1.319E+13	1.266E+13	1.219E+13	1.177E+13
10	9.626E+14	9.196E+14	8.837E+14	8.530E+14	8.260E+14	8.017E+14	7.795E+14
9	1.030E+14	7.990E+13	6.300E+13	5.055E+13	4.131E+13	3.438E+13	2.913E+13
8	4.345E+13	3.855E+13	3.455E+13	3.120E+13	2.835E+13	2.589E+13	2.373E+13
7	2.200E+12	1.994E+12	1.831E+12	1.693E+12	1.572E+12	1.463E+12	1.363E+12
6	1.168E+11	5.746E+10	3.052E+10	1.811E+10	1.228E+10	9.470E+09	8.055E+09
5	8.135E+09	4.291E+09	2.351E+09	1.372E+09	8.772E+08	6.270E+08	4.998E+08
4	1.298E+09	6.790E+08	3.651E+08	2.055E+08	1.239E+08	8.197E+07	6.002E+07
3	2.994E+07	2.884E+07	2.779E+07	2.677E+07	2.579E+07	2.484E+07	2.394E+07
2	4.828E+06	4.650E+06	4.479E+06	4.315E+06	4.157E+06	4.004E+06	3.858E+06
1	7.536E+05	7.258E+05	6.992E+05	6.735E+05	6.488E+05	6.250E+05	6.022E+05
TOT	1.197E+15	1.122E+15	1.062E+15	1.013E+15	9.713E+14	9.353E+14	9.035E+14

	17.0 YR	18.0 YR	19.0 YR	20.0 YR
18	4.266E+12	4.165E+12	4.068E+12	3.973E+12
17	3.694E+12	3.594E+12	3.499E+12	3.409E+12
16	7.591E+12	7.386E+12	7.189E+12	6.998E+12
15	8.043E+12	7.899E+12	7.758E+12	7.622E+12
14	7.001E+12	6.814E+12	6.634E+12	6.460E+12
13	9.718E+12	9.386E+12	9.070E+12	8.770E+12
12	1.611E+13	1.567E+13	1.526E+13	1.485E+13
11	1.139E+13	1.103E+13	1.071E+13	1.040E+13
10	7.589E+14	7.395E+14	7.212E+14	7.036E+14
9	2.508E+13	2.193E+13	1.944E+13	1.742E+13
8	2.181E+13	2.010E+13	1.856E+13	1.717E+13
7	1.272E+12	1.188E+12	1.110E+12	1.038E+12
6	7.295E+09	6.847E+09	6.549E+09	6.325E+09
5	4.346E+08	4.004E+08	3.818E+08	3.709E+08
4	4.825E+07	4.164E+07	3.766E+07	3.505E+07
3	2.306E+07	2.222E+07	2.141E+07	2.063E+07

2	3.717E+06	3.581E+06	3.451E+06	3.325E+06
1	5.802E+05	5.590E+05	5.386E+05	5.190E+05
TOT	8.749E+14	8.487E+14	8.245E+14	8.017E+14

BW 15x15 4.0 wt% U235
55,000 MWD/MTU

NEUTRON GROUP STRUCTURE

1	6.43E+00 - 2.00E+01
2	3.00E+00 - 6.43E+00
3	1.85E+00 - 3.00E+00
4	1.40E+00 - 1.85E+00
5	9.00E-01 - 1.40E+00
6	4.00E-01 - 9.00E-01
7	1.00E-01 - 4.00E-01

PHOTON GROUP STRUCTURE

18	1.0000E-02	TO	2.0000E-02
17	2.0000E-02	TO	3.0000E-02
16	3.0000E-02	TO	4.5000E-02
15	4.5000E-02	TO	7.0000E-02
14	7.0000E-02	TO	1.0000E-01
13	1.0000E-01	TO	1.5000E-01
12	1.5000E-01	TO	3.0000E-01
11	3.0000E-01	TO	4.5000E-01
10	4.5000E-01	TO	7.0000E-01
9	7.0000E-01	TO	1.0000E+00
8	1.0000E+00	TO	1.5000E+00
7	1.5000E+00	TO	2.0000E+00
6	2.0000E+00	TO	2.5000E+00
5	2.5000E+00	TO	3.0000E+00
4	3.0000E+00	TO	4.0000E+00
3	4.0000E+00	TO	6.0000E+00
2	6.0000E+00	TO	8.0000E+00
1	8.0000E+00	TO	1.1000E+01

NEUTRON SPECTRUM

	3.0 YR	4.0 YR	5.0 YR	6.0 YR	7.0 YR	8.0 YR	9.0 YR
1	1.612E+07	1.544E+07	1.483E+07	1.426E+07	1.371E+07	1.319E+07	1.269E+07
2	1.816E+08	1.739E+08	1.670E+08	1.606E+08	1.545E+08	1.487E+08	1.431E+08
3	1.993E+08	1.910E+08	1.835E+08	1.765E+08	1.699E+08	1.636E+08	1.575E+08
4	1.131E+08	1.084E+08	1.042E+08	1.002E+08	9.639E+07	9.276E+07	8.929E+07
5	1.537E+08	1.473E+08	1.415E+08	1.361E+08	1.309E+08	1.259E+08	1.212E+08
6	1.680E+08	1.610E+08	1.547E+08	1.487E+08	1.430E+08	1.376E+08	1.324E+08
7	3.290E+07	3.152E+07	3.028E+07	2.911E+07	2.799E+07	2.693E+07	2.591E+07
TOT	8.647E+08	8.286E+08	7.960E+08	7.655E+08	7.364E+08	7.087E+08	6.821E+08

	10.0 YR	11.0 YR	12.0 YR	13.0 YR	14.0 YR	15.0 YR	16.0 YR
1	1.221E+07	1.176E+07	1.132E+07	1.090E+07	1.049E+07	1.010E+07	9.730E+06
2	1.378E+08	1.327E+08	1.278E+08	1.231E+08	1.185E+08	1.142E+08	1.100E+08
3	1.517E+08	1.462E+08	1.408E+08	1.357E+08	1.308E+08	1.261E+08	1.215E+08
4	8.596E+07	8.278E+07	7.972E+07	7.679E+07	7.397E+07	7.126E+07	6.866E+07
5	1.166E+08	1.123E+08	1.081E+08	1.041E+08	1.003E+08	9.657E+07	9.302E+07
6	1.274E+08	1.226E+08	1.181E+08	1.137E+08	1.095E+08	1.054E+08	1.015E+08
7	2.494E+07	2.401E+07	2.311E+07	2.225E+07	2.143E+07	2.063E+07	1.987E+07
TOT	6.566E+08	6.323E+08	6.090E+08	5.865E+08	5.650E+08	5.443E+08	5.243E+08

	17.0 YR	18.0 YR	19.0 YR	20.0 YR
1	9.371E+06	9.026E+06	8.694E+06	8.374E+06
2	1.060E+08	1.022E+08	9.844E+07	9.487E+07
3	1.172E+08	1.130E+08	1.089E+08	1.050E+08
4	6.616E+07	6.375E+07	6.144E+07	5.921E+07
5	8.961E+07	8.632E+07	8.316E+07	8.013E+07
6	9.778E+07	9.418E+07	9.072E+07	8.739E+07
7	1.914E+07	1.844E+07	1.776E+07	1.711E+07
TOT	5.053E+08	4.869E+08	4.691E+08	4.521E+08

GAMMA SPECTRUM

	3.0 YR	4.0 YR	5.0 YR	6.0 YR	7.0 YR	8.0 YR	9.0 YR
18	1.880E+15	1.231E+15	9.187E+14	7.608E+14	6.758E+14	6.258E+14	5.931E+14
17	1.101E+15	7.175E+14	5.278E+14	4.289E+14	3.734E+14	3.395E+14	3.168E+14
16	1.271E+15	8.518E+14	6.516E+14	5.499E+14	4.935E+14	4.587E+14	4.346E+14
15	8.914E+14	5.728E+14	4.206E+14	3.451E+14	3.055E+14	2.832E+14	2.692E+14
14	6.686E+14	4.158E+14	2.954E+14	2.357E+14	2.042E+14	1.860E+14	1.744E+14
13	8.028E+14	4.814E+14	3.329E+14	2.607E+14	2.230E+14	2.011E+14	1.867E+14
12	6.142E+14	3.777E+14	2.646E+14	2.084E+14	1.790E+14	1.624E+14	1.519E+14
11	3.336E+14	2.046E+14	1.406E+14	1.072E+14	8.873E+13	7.767E+13	7.048E+13
10	6.597E+15	5.340E+15	4.508E+15	3.935E+15	3.529E+15	3.231E+15	3.007E+15
9	2.126E+15	1.519E+15	1.098E+15	8.007E+14	5.896E+14	4.385E+14	3.298E+14
8	2.992E+14	2.185E+14	1.680E+14	1.345E+14	1.111E+14	9.411E+13	8.125E+13
7	1.888E+13	1.076E+13	6.820E+12	4.828E+12	3.762E+12	3.145E+12	2.752E+12
6	1.739E+13	7.504E+12	3.267E+12	1.437E+12	6.401E+11	2.897E+11	1.342E+11
5	4.652E+11	2.344E+11	1.183E+11	5.988E+10	3.043E+10	1.559E+10	8.099E+09
4	5.762E+10	2.919E+10	1.481E+10	7.529E+09	3.845E+09	1.979E+09	1.034E+09
3	3.729E+07	3.574E+07	3.434E+07	3.303E+07	3.177E+07	3.058E+07	2.943E+07
2	4.295E+06	4.117E+06	3.956E+06	3.804E+06	3.660E+06	3.522E+06	3.389E+06
1	4.941E+05	4.736E+05	4.551E+05	4.376E+05	4.210E+05	4.051E+05	3.899E+05
TOT	1.662E+16	1.195E+16	9.336E+15	7.774E+15	6.777E+15	6.102E+15	5.618E+15

	10.0 YR	11.0 YR	12.0 YR	13.0 YR	14.0 YR	15.0 YR	16.0 YR
18	5.693E+14	5.503E+14	5.341E+14	5.195E+14	5.060E+14	4.932E+14	4.811E+14
17	3.002E+14	2.871E+14	2.762E+14	2.667E+14	2.582E+14	2.504E+14	2.432E+14
16	4.160E+14	4.005E+14	3.869E+14	3.746E+14	3.632E+14	3.525E+14	3.424E+14
15	2.595E+14	2.520E+14	2.457E+14	2.402E+14	2.350E+14	2.302E+14	2.257E+14
14	1.661E+14	1.596E+14	1.540E+14	1.491E+14	1.446E+14	1.404E+14	1.364E+14
13	1.760E+14	1.673E+14	1.599E+14	1.531E+14	1.470E+14	1.412E+14	1.359E+14
12	1.446E+14	1.389E+14	1.342E+14	1.299E+14	1.260E+14	1.224E+14	1.189E+14
11	6.542E+13	6.159E+13	5.852E+13	5.596E+13	5.375E+13	5.180E+13	5.004E+13
10	2.832E+15	2.693E+15	2.578E+15	2.482E+15	2.398E+15	2.324E+15	2.257E+15
9	2.513E+14	1.942E+14	1.524E+14	1.217E+14	9.892E+13	8.184E+13	6.891E+13
8	7.121E+13	6.316E+13	5.654E+13	5.100E+13	4.628E+13	4.220E+13	3.861E+13
7	2.473E+12	2.257E+12	2.078E+12	1.922E+12	1.783E+12	1.657E+12	1.542E+12
6	6.439E+10	3.270E+10	1.812E+10	1.130E+10	8.042E+09	6.438E+09	5.610E+09
5	4.323E+09	2.418E+09	1.458E+09	9.724E+08	7.270E+08	6.022E+08	5.380E+08
4	5.544E+08	3.107E+08	1.862E+08	1.222E+08	8.876E+07	7.085E+07	6.083E+07
3	2.833E+07	2.727E+07	2.626E+07	2.528E+07	2.435E+07	2.345E+07	2.258E+07
2	3.263E+06	3.141E+06	3.024E+06	2.912E+06	2.804E+06	2.700E+06	2.601E+06
1	3.753E+05	3.613E+05	3.479E+05	3.349E+05	3.225E+05	3.106E+05	2.991E+05
TOT	5.255E+15	4.970E+15	4.739E+15	4.545E+15	4.379E+15	4.232E+15	4.100E+15

	17.0 YR	18.0 YR	19.0 YR	20.0 YR
18	4.695E+14	4.583E+14	4.474E+14	4.369E+14
17	2.365E+14	2.301E+14	2.240E+14	2.182E+14
16	3.328E+14	3.235E+14	3.147E+14	3.062E+14
15	2.213E+14	2.170E+14	2.129E+14	2.090E+14
14	1.326E+14	1.290E+14	1.256E+14	1.223E+14
13	1.309E+14	1.261E+14	1.216E+14	1.173E+14
12	1.156E+14	1.125E+14	1.094E+14	1.065E+14
11	4.843E+13	4.695E+13	4.556E+13	4.426E+13
10	2.195E+15	2.138E+15	2.084E+15	2.032E+15
9	5.899E+13	5.127E+13	4.517E+13	4.026E+13
8	3.544E+13	3.261E+13	3.007E+13	2.776E+13
7	1.435E+12	1.337E+12	1.246E+12	1.163E+12
6	5.150E+09	4.868E+09	4.672E+09	4.520E+09
5	5.040E+08	4.850E+08	4.734E+08	4.654E+08
4	5.485E+07	5.093E+07	4.810E+07	4.585E+07
3	2.175E+07	2.095E+07	2.018E+07	1.944E+07
2	2.505E+06	2.413E+06	2.324E+06	2.239E+06
1	2.881E+05	2.775E+05	2.673E+05	2.575E+05
TOT	3.979E+15	3.866E+15	3.761E+15	3.662E+15

GAMMA SPECTRUM - MEV/SEC

	3.0 YR	4.0 YR	5.0 YR	6.0 YR	7.0 YR	8.0 YR	9.0 YR
18	2.819E+13	1.847E+13	1.378E+13	1.141E+13	1.014E+13	9.386E+12	8.897E+12
17	2.752E+13	1.794E+13	1.320E+13	1.072E+13	9.335E+12	8.488E+12	7.920E+12
16	4.765E+13	3.194E+13	2.443E+13	2.062E+13	1.851E+13	1.720E+13	1.630E+13
15	5.125E+13	3.294E+13	2.418E+13	1.984E+13	1.757E+13	1.628E+13	1.548E+13
14	5.684E+13	3.534E+13	2.511E+13	2.004E+13	1.736E+13	1.581E+13	1.482E+13
13	1.003E+14	6.018E+13	4.161E+13	3.259E+13	2.788E+13	2.514E+13	2.333E+13
12	1.382E+14	8.499E+13	5.953E+13	4.690E+13	4.028E+13	3.653E+13	3.418E+13
11	1.251E+14	7.672E+13	5.271E+13	4.021E+13	3.327E+13	2.912E+13	2.643E+13
10	3.793E+15	3.071E+15	2.592E+15	2.263E+15	2.029E+15	1.858E+15	1.729E+15
9	1.807E+15	1.291E+15	9.331E+14	6.806E+14	5.011E+14	3.727E+14	2.804E+14
8	3.739E+14	2.731E+14	2.100E+14	1.681E+14	1.389E+14	1.176E+14	1.016E+14
7	3.304E+13	1.883E+13	1.194E+13	8.449E+12	6.584E+12	5.504E+12	4.815E+12
6	3.912E+13	1.689E+13	7.352E+12	3.234E+12	1.440E+12	6.518E+11	3.019E+11
5	1.279E+12	6.446E+11	3.254E+11	1.647E+11	8.369E+10	4.286E+10	2.227E+10
4	2.017E+11	1.022E+11	5.183E+10	2.635E+10	1.346E+10	6.927E+09	3.619E+09
3	1.864E+08	1.787E+08	1.717E+08	1.651E+08	1.589E+08	1.529E+08	1.471E+08
2	3.007E+07	2.882E+07	2.769E+07	2.663E+07	2.562E+07	2.465E+07	2.373E+07
1	4.694E+06	4.499E+06	4.323E+06	4.157E+06	3.999E+06	3.849E+06	3.704E+06
TOT	6.623E+15	5.030E+15	4.009E+15	3.326E+15	2.852E+15	2.513E+15	2.263E+15

	10.0 YR	11.0 YR	12.0 YR	13.0 YR	14.0 YR	15.0 YR	16.0 YR
18	8.540E+12	8.255E+12	8.011E+12	7.792E+12	7.589E+12	7.399E+12	7.217E+12
17	7.505E+12	7.178E+12	6.904E+12	6.667E+12	6.454E+12	6.260E+12	6.080E+12
16	1.560E+13	1.502E+13	1.451E+13	1.405E+13	1.362E+13	1.322E+13	1.284E+13
15	1.492E+13	1.449E+13	1.413E+13	1.381E+13	1.351E+13	1.324E+13	1.298E+13
14	1.412E+13	1.356E+13	1.309E+13	1.267E+13	1.229E+13	1.193E+13	1.160E+13
13	2.200E+13	2.092E+13	1.998E+13	1.914E+13	1.837E+13	1.766E+13	1.699E+13
12	3.254E+13	3.126E+13	3.019E+13	2.923E+13	2.836E+13	2.754E+13	2.676E+13
11	2.453E+13	2.310E+13	2.195E+13	2.099E+13	2.016E+13	1.942E+13	1.876E+13
10	1.629E+15	1.548E+15	1.483E+15	1.427E+15	1.379E+15	1.336E+15	1.298E+15
9	2.136E+14	1.651E+14	1.296E+14	1.034E+14	8.408E+13	6.956E+13	5.857E+13
8	8.901E+13	7.894E+13	7.068E+13	6.376E+13	5.785E+13	5.274E+13	4.827E+13
7	4.328E+12	3.950E+12	3.636E+12	3.364E+12	3.120E+12	2.900E+12	2.698E+12
6	1.449E+11	7.358E+10	4.077E+10	2.542E+10	1.809E+10	1.449E+10	1.262E+10
5	1.189E+10	6.651E+09	4.008E+09	2.674E+09	1.999E+09	1.656E+09	1.479E+09
4	1.940E+09	1.087E+09	6.518E+08	4.277E+08	3.107E+08	2.480E+08	2.129E+08
3	1.416E+08	1.364E+08	1.313E+08	1.264E+08	1.217E+08	1.172E+08	1.129E+08
2	2.284E+07	2.199E+07	2.117E+07	2.038E+07	1.963E+07	1.890E+07	1.820E+07
1	3.565E+06	3.432E+06	3.305E+06	3.182E+06	3.064E+06	2.951E+06	2.842E+06
TOT	2.075E+15	1.930E+15	1.815E+15	1.722E+15	1.644E+15	1.578E+15	1.520E+15

	17.0 YR	18.0 YR	19.0 YR	20.0 YR
18	7.042E+12	6.874E+12	6.711E+12	6.554E+12
17	5.912E+12	5.752E+12	5.600E+12	5.455E+12
16	1.248E+13	1.213E+13	1.180E+13	1.148E+13
15	1.272E+13	1.248E+13	1.224E+13	1.202E+13
14	1.127E+13	1.097E+13	1.067E+13	1.039E+13
13	1.636E+13	1.576E+13	1.520E+13	1.467E+13
12	2.602E+13	2.530E+13	2.462E+13	2.395E+13
11	1.816E+13	1.760E+13	1.709E+13	1.660E+13
10	1.262E+15	1.229E+15	1.198E+15	1.168E+15
9	5.014E+13	4.358E+13	3.839E+13	3.422E+13
8	4.431E+13	4.077E+13	3.758E+13	3.470E+13
7	2.512E+12	2.340E+12	2.181E+12	2.035E+12
6	1.159E+10	1.095E+10	1.051E+10	1.017E+10
5	1.386E+09	1.334E+09	1.302E+09	1.280E+09
4	1.920E+08	1.783E+08	1.684E+08	1.605E+08
3	1.087E+08	1.047E+08	1.009E+08	9.719E+07

2	1.753E+07	1.689E+07	1.627E+07	1.567E+07
1	2.737E+06	2.636E+06	2.539E+06	2.446E+06
TOT	1.469E+15	1.423E+15	1.380E+15	1.341E+15

32,500 MWD/MTU burnup - B&W 15x15 fuel element
2.9 w/o U235 - 1 gm Co59 initially

CURIES

	3.0 YR	4.0 YR	5.0 YR	6.0 YR	7.0 YR	8.0 YR	9.0 YR
CO 60	9.57E+01	8.39E+01	7.36E+01	6.45E+01	5.65E+01	4.96E+01	4.35E+01

	10.0 YR	11.0 YR	12.0 YR	13.0 YR	14.0 YR	15.0 YR	16.0 YR
CO 60	3.81E+01	3.34E+01	2.93E+01	2.57E+01	2.25E+01	1.97E+01	1.73E+01

	17.0 YR	18.0 YR	19.0 YR	20.0 YR
CO 60	1.52E+01	1.33E+01	1.17E+01	1.02E+01

Calculated Gamma Sources from Cobalt Mass of Cobalt in source term calc (gm) 1

Additional fuel source in group 8 (1.0-1.5 MeV) curies
Mass (kg) 4.9 Frac tot 1 impurity level (gm.kg) 1

3.0 YR	4.0 YR	5.0 YR	6.0 YR	7.0 YR	8.0 YR	9.0 YR
468.93	411.11	360.64	316.05	276.85	243.04	213.15

10.0 YR	11.0 YR	12.0 YR	13.0 YR	14.0 YR	15.0 YR	16.0 YR
186.69	163.66	143.57	125.93	110.25	96.53	84.77

17.0 YR	18.0 YR	19.0 YR	20.0 YR
74.48	65.17	57.33	49.98

Bottom Nozzle - curies
Mass (kg) 9.46 Frac tot 0.2 impurity level (gm.kg) 1

3.0 YR	4.0 YR	5.0 YR	6.0 YR	7.0 YR	8.0 YR	9.0 YR
181.06	158.74	139.25	122.03	106.90	93.84	82.30

10.0 YR	11.0 YR	12.0 YR	13.0 YR	14.0 YR	15.0 YR	16.0 YR
72.09	63.19	55.44	48.62	42.57	37.27	32.73

17.0 YR	18.0 YR	19.0 YR	20.0 YR
28.76	25.16	22.14	19.30

Plenum Springs - curies

Mass (kg)	0.72176	Frac tot	0.2	impurity level (gm.kg)	1

3.0 YR	4.0 YR	5.0 YR	6.0 YR	7.0 YR	8.0 YR	9.0 YR
13.81	12.11	10.62	9.31	8.16	7.16	6.28

10.0 YR	11.0 YR	12.0 YR	13.0 YR	14.0 YR	15.0 YR	16.0 YR
5.50	4.82	4.23	3.71	3.25	2.84	2.50

17.0 YR	18.0 YR	19.0 YR	20.0 YR
2.19	1.92	1.69	1.47

Plenum Spacer - curies

Mass (kg)	0.82824	Frac tot	0.1	impurity level (gm.kg)	1

3.0 YR	4.0 YR	5.0 YR	6.0 YR	7.0 YR	8.0 YR	9.0 YR
7.93	6.95	6.10	5.34	4.68	4.11	3.60

10.0 YR	11.0 YR	12.0 YR	13.0 YR	14.0 YR	15.0 YR	16.0 YR
3.16	2.77	2.43	2.13	1.86	1.63	1.43

17.0 YR	18.0 YR	19.0 YR	20.0 YR
1.26	1.10	0.97	0.84

Top End Fitting - curies

Mass (kg)	9.28	Frac tot	0.1	impurity level (gm.kg)	1

3.0 YR	4.0 YR	5.0 YR	6.0 YR	7.0 YR	8.0 YR	9.0 YR
88.81	77.86	68.30	59.86	52.43	46.03	40.37

10.0 YR	11.0 YR	12.0 YR	13.0 YR	14.0 YR	15.0 YR	16.0 YR
35.36	31.00	27.19	23.85	20.88	18.28	16.05

17.0 YR	18.0 YR	19.0 YR	20.0 YR
14.11	12.34	10.86	9.47

BW 15x15 4.0 wt% U235 - 1.0 gm Co59 originally
55,000 MWD/MTU

CURIES

	3.0 YR	4.0 YR	5.0 YR	6.0 YR	7.0 YR	8.0 YR	9.0 YR
CO 60	1.30E+02	1.14E+02	9.96E+01	8.73E+01	7.66E+01	6.71E+01	5.89E+01

	10.0 YR	11.0 YR	12.0 YR	13.0 YR	14.0 YR	15.0 YR	16.0 YR
CO 60	5.16E+01	4.52E+01	3.97E+01	3.48E+01	3.05E+01	2.67E+01	2.34E+01

	17.0 YR	18.0 YR	19.0 YR	20.0 YR
CO 60	2.05E+01	1.80E+01	1.58E+01	1.38E+01

Calculated Gamma Sources from Cobalt Mass of Cobalt in source term calc (gm) 1

Additional fuel source in group 8 (1.0-1.5 MeV) curies
Mass (kg) 4.9 Frac tot 1 impurity level (gm.kg) 1

3.0 YR	4.0 YR	5.0 YR	6.0 YR	7.0 YR	8.0 YR	9.0 YR
637.00	558.60	488.04	427.77	375.34	328.79	288.61

10.0 YR	11.0 YR	12.0 YR	13.0 YR	14.0 YR	15.0 YR	16.0 YR
252.84	221.48	194.53	170.52	149.45	130.83	114.66

17.0 YR	18.0 YR	19.0 YR	20.0 YR
100.45	88.20	77.42	67.62

Bottom Nozzle - curies
Mass (kg) 9.46 Frac tot 0.2 impurity level (gm.kg) 1

3.0 YR	4.0 YR	5.0 YR	6.0 YR	7.0 YR	8.0 YR	9.0 YR
245.96	215.69	188.44	165.17	144.93	126.95	111.44

10.0 YR	11.0 YR	12.0 YR	13.0 YR	14.0 YR	15.0 YR	16.0 YR
97.63	85.52	75.11	65.84	57.71	50.52	44.27

17.0 YR	18.0 YR	19.0 YR	20.0 YR
38.79	34.06	29.89	26.11

Plenum Springs - curies

Mass (kg)	0.72176	Frac tot	0.2	impurity level (gm.kg)	1

3.0 YR	4.0 YR	5.0 YR	6.0 YR	7.0 YR	8.0 YR	9.0 YR
18.77	16.46	14.38	12.60	11.06	9.69	8.50

10.0 YR	11.0 YR	12.0 YR	13.0 YR	14.0 YR	15.0 YR	16.0 YR
7.45	6.52	5.73	5.02	4.40	3.85	3.38

17.0 YR	18.0 YR	19.0 YR	20.0 YR
2.96	2.60	2.28	1.99

Plenum Spacer - curies

Mass (kg)	0.82824	Frac tot	0.1	impurity level (gm.kg)	1

3.0 YR	4.0 YR	5.0 YR	6.0 YR	7.0 YR	8.0 YR	9.0 YR
10.77	9.44	8.25	7.23	6.34	5.56	4.88

10.0 YR	11.0 YR	12.0 YR	13.0 YR	14.0 YR	15.0 YR	16.0 YR
4.27	3.74	3.29	2.88	2.53	2.21	1.94

17.0 YR	18.0 YR	19.0 YR	20.0 YR
1.70	1.49	1.31	1.14

Top End Fitting - curies

Mass (kg)	9.28	Frac tot	0.1	impurity level (gm.kg)	1

3.0 YR	4.0 YR	5.0 YR	6.0 YR	7.0 YR	8.0 YR	9.0 YR
120.64	105.79	92.43	81.01	71.08	62.27	54.66

10.0 YR	11.0 YR	12.0 YR	13.0 YR	14.0 YR	15.0 YR	16.0 YR
47.88	41.95	36.84	32.29	28.30	24.78	21.72

17.0 YR	18.0 YR	19.0 YR	20.0 YR
19.02	16.70	14.66	12.81

40,000 MWD/MTU burnup - B&W 15x15 fuel element flux
3.4 w/o U235 - Hybrid of W 17x17 and W 15x15 BPRA

CURIES TOTAL

	3.0 YR	4.0 YR	5.0 YR	6.0 YR	7.0 YR	8.0 YR	9.0 YR
CO 60	1.23E+03	1.08E+03	9.48E+02	8.31E+02	7.29E+02	6.39E+02	5.60E+02

	10.0 YR	11.0 YR	12.0 YR	13.0 YR	14.0 YR	15.0 YR	16.0 YR
CO 60	4.91E+02	4.31E+02	3.78E+02	3.31E+02	2.90E+02	2.54E+02	2.23E+02

	17.0 YR	18.0 YR	19.0 YR	20.0 YR
CO 60	1.96E+02	1.71E+02	1.50E+02	1.32E+02

CURIES TOP ZONE Fraction of total: 0.036545

	3.0 YR	4.0 YR	5.0 YR	6.0 YR	7.0 YR	8.0 YR	9.0 YR
CO 60	4.50E+01	3.95E+01	3.46E+01	3.04E+01	2.66E+01	2.34E+01	2.05E+01

	10.0 YR	11.0 YR	12.0 YR	13.0 YR	14.0 YR	15.0 YR	16.0 YR
CO 60	1.79E+01	1.58E+01	1.38E+01	1.21E+01	1.06E+01	9.28E+00	8.15E+00

	17.0 YR	18.0 YR	19.0 YR	20.0 YR
CO 60	7.16E+00	6.25E+00	5.48E+00	4.82E+00

CURIES PLENUM SPACER Fraction of total: 0.005566

	3.0 YR	4.0 YR	5.0 YR	6.0 YR	7.0 YR	8.0 YR	9.0 YR
CO 60	6.85E+00	6.01E+00	5.28E+00	4.63E+00	4.06E+00	3.56E+00	3.12E+00

	10.0 YR	11.0 YR	12.0 YR	13.0 YR	14.0 YR	15.0 YR	16.0 YR
CO 60	2.73E+00	2.40E+00	2.10E+00	1.84E+00	1.61E+00	1.41E+00	1.24E+00

	17.0 YR	18.0 YR	19.0 YR	20.0 YR
CO 60	1.09E+00	9.52E-01	8.35E-01	7.35E-01

CURIES PLENUM SPRING Fraction of total: 0.009699

	3.0 YR	4.0 YR	5.0 YR	6.0 YR	7.0 YR	8.0 YR	9.0 YR
CO 60	1.19E+01	1.05E+01	9.19E+00	8.06E+00	7.07E+00	6.20E+00	5.43E+00

	10.0 YR	11.0 YR	12.0 YR	13.0 YR	14.0 YR	15.0 YR	16.0 YR
CO 60	4.76E+00	4.18E+00	3.67E+00	3.21E+00	2.81E+00	2.46E+00	2.16E+00

	17.0 YR	18.0 YR	19.0 YR	20.0 YR
CO 60	1.90E+00	1.66E+00	1.45E+00	1.28E+00

CURIES IN CORE Fraction of total: 0.948000

	3.0 YR	4.0 YR	5.0 YR	6.0 YR	7.0 YR	8.0 YR	9.0 YR
CO 60	1.17E+03	1.02E+03	8.99E+02	7.88E+02	6.91E+02	6.06E+02	5.31E+02

	10.0 YR	11.0 YR	12.0 YR	13.0 YR	14.0 YR	15.0 YR	16.0 YR
CO 60	4.65E+02	4.09E+02	3.58E+02	3.14E+02	2.75E+02	2.41E+02	2.11E+02

	17.0 YR	18.0 YR	19.0 YR	20.0 YR
CO 60	1.86E+02	1.62E+02	1.42E+02	1.25E+02

Appendix D: Near Dose Rates for HI-STORM Overpack

This appendix presents the dose rates calculated at the surface and 1 meter from the HI-STORM overpack. This output, which is at the end of this section, is for a burnup and cooling time of 32,500 MWD/MTU and 5-year cooling and is presented in the form of tables printed from EXCEL. A more detailed discussion of the calculations is provided in Section 7.

Some pages have labels "sur" on the far left. These refer to MCNP surfaces. A description of the MCNP surfaces and segmentation are provided before the results.

A brief description of the EXCEL output.

The first two lines are title lines indicating the burnup, enrichment and decay time. The next few lines list the runs from which the data is taken. After the runs, the next line describes which dose component each column represents. The phot(n,p) means photons from neutron interactions in the surrounding material. Phot refers to photons coming from decay of fission products in the fuel region and from decay of cobalt-60 in the in-core grid spacers. Cobalt refers to the cobalt source in the end fittings. The line after the dose components titles the columns value or rel err. The value means dose and the rel err refers to relative error which is defined as the standard deviation over the mean. In order to calculate the standard deviation of a value listed in the value column, one would take the associated rel err number and multiply by the number in the value column. The numbers listed under the total column are total doses. The rel err of the total values are statistically calculated from the standard deviations of the components.

Dose rates from sections of the BPRA located in the active region of the fuel are included in the columns labeled Phot. Dose rates from sections of the BPRA located above the active region are included in the cobalt columns.

Axial Tally Segments

Segment	start MCNP pos cm	finish MCNP pos cm	start pos rel to bottom feet	finish pos rel to bottom feet		
1	-33.02	-15.24	0.00	0.58		bottom of overpack -33.02
2	-15.24	15.24	0.58	1.58		
3	15.24	45.72	1.58	2.58		
4	45.72	76.2	2.58	3.58		
5	76.2	106.68	3.58	4.58		
6	106.68	137.16	4.58	5.58		
7	137.16	167.64	5.58	6.58		
8	167.64	198.12	6.58	7.58		
9	198.12	228.6	7.58	8.58	<------	center of bwr fuel 223.227 cm
10	228.6	259.08	8.58	9.58	<------	center of pwr fuel 236.16 cm
11	259.08	289.56	9.58	10.58		
12	289.56	320.04	10.58	11.58		
13	320.04	350.52	11.58	12.58		
14	350.52	381	12.58	13.58		
15	381	411.48	13.58	14.58		
16	411.48	441.96	14.58	15.58		
17	441.96	472.44	15.58	16.58		
18	472.44	502.92	16.58	17.58		
19	502.92	533.4	17.58	18.58		
20	533.4	563.88	18.58	19.58	<------	top of overpack 553.72
21	563.88	594.36	19.58	20.58		
22	594.36	624.84	20.58	21.58		
23	624.84	655.32	21.58	22.58		
24	655.32	761.975	22.58	26.08		

Radial tally surfaces using segmentation above

surface	radius	distance from edge meters	distance from edge feet
edge overpack	168.275		
720	168.775	0.005	0.016404
728	199.255	0.3098	1.016404
731	229.735	0.6146	2.016404
724	268.525	1.0025	3.289042

Tally surfaces for ducts - area is same as area of duct

surface	radius	distance from edge meters	distance from edge feet	
edge overpack	168.275			
718	168.525	0.0025	0.01	bottom duct 15 inch wide by 10 inch tall
1716	168.175	-0.001	0.00	bottom duct 3.08 in tall by 4.5 in wide in center of duct and DPA
726	199.005	0.3073	1.01	bottom duct 15 inch wide by 10 inch tall
729	229.485	0.6121	2.01	bottom duct 15 inch wide by 10 inch tall
722	268.275	1	3.28	bottom duct 15 inch wide by 10 inch tall
719	168.525	0.0025	0.01	top duct 6 in tall by 25 inches wide
727	199.005	0.3073	1.01	top duct 6 in tall by 25 inches wide
730	229.485	0.6121	2.01	top duct 6 in tall by 25 inches wide
723	268.275	1	3.28	top duct 6 in tall by 25 inches wide

Tally surfaces on top of overpack

surface	axial loc	distance from edge meters	distance from edge feet
top of overpack	553.72		
918	554.72	0.01	0.03
919	653.72	1	3.28

Radial segments on top of overpack

Segment	start cm	finish cm	width cm	width in	start pos rel to center feet	finish pos rel to center feet		
1	0	15.24	15.24	6.00	0.00	0.50		
2	15.24	45.72	30.48	12.00	0.50	1.50		
3	45.72	76.2	30.48	12.00	1.50	2.50		
4	76.2	86.83625	10.64	4.19	2.50	2.85		
5	86.83625	93.3451	6.51	2.56	2.85	3.06	<------	Annulus between
6	93.3451	106.68	13.33	5.25	3.06	3.50		MPC and overpack
7	106.68	137.16	30.48	12.00	3.50	4.50		is between
8	137.16	167.64	30.48	12.00	4.50	5.50		86.83625 and 93.345 cm
9	167.64	168.275	0.64	0.25	5.50	5.52		

Cell tallys on lid directly above ducts

Cells are 25 inches wide in the following locations

ID (cm)	OD (cm)	width (cm)	width (in)	
109.22	124.46	15.24	6	109.22 is the OD of the concrete on HI-STORM lid
124.46	139.7	15.24	6	
139.7	154.94	15.24	6	

32,500 MWD/MTU burnup - B&W 15x15 fuel element 2.9 w/o U235 BPRA Curies 331.00

5.0 YR 5.0 YR 5.0 YR 5.0 YR dwg3443 TP Curies 0.00

h4n5d11m h4n5d11m h4p5d11m 4q5d11m h4c5d11n Num of assemblies 32

h4r5d11m

h4p5e08m h4q5e07m

h4r5e07m

		neutron value	rel err	phot (n,p) value	rel err	phot value	rel err	cobalt value	rel err	total value	rel err
sur		720									
	1	0.611	0.033	0.091	0.035	1.541	0.063	4.205	0.010	6.448	0.017
	2	0.316	0.033	0.129	0.036	1.675	0.022	6.355	0.012	8.476	0.010
	3	0.163	0.074	0.222	0.029	5.550	0.011	12.287	0.021	18.221	0.014
	4	0.330	0.067	0.382	0.026	15.108	0.011	10.904	0.030	26.724	0.014
	5	0.557	0.052	0.555	0.022	26.534	0.011	3.518	0.055	31.163	0.011
	6	0.778	0.045	0.741	0.020	31.093	0.012	0.558	0.128	33.170	0.012
	7	0.756	0.043	0.830	0.019	33.092	0.013	0.110	0.405	34.788	0.013
	8	0.859	0.043	0.889	0.017	32.598	0.013	0.057	0.455	34.402	0.012
	9	0.857	0.044	0.901	0.018	32.253	0.013	0.034	0.410	34.045	0.013
	10	0.848	0.043	0.876	0.018	32.022	0.013	0.013	0.495	33.759	0.013
	11	0.770	0.041	0.826	0.019	31.530	0.013	0.022	0.595	33.148	0.013
	12	0.775	0.045	0.760	0.018	31.560	0.013	0.032	0.381	33.126	0.013
	13	0.593	0.044	0.637	0.019	29.673	0.013	0.117	0.279	31.019	0.013
	14	0.487	0.051	0.503	0.022	26.745	0.012	1.043	0.118	28.778	0.012
	15	0.309	0.063	0.338	0.025	18.134	0.011	4.772	0.052	23.553	0.013
	16	0.143	0.071	0.226	0.034	8.414	0.011	9.370	0.027	18.154	0.015
	17	0.063	0.069	0.127	0.035	2.661	0.011	9.085	0.020	11.937	0.016
	18	0.104	0.032	0.065	0.032	0.640	0.020	4.237	0.017	5.045	0.015
	19	0.634	0.020	0.055	0.035	1.705	0.052	4.346	0.009	6.741	0.015
	20	0.825	0.016	0.048	0.019	0.156	0.047	0.648	0.040	1.677	0.018
	21	0.844	0.018	0.057	0.019	0.201	0.049	0.809	0.017	1.912	0.012
	22	0.617	0.021	0.067	0.019	0.254	0.081	0.872	0.016	1.809	0.015
	23	0.445	0.024	0.065	0.017	0.203	0.071	0.750	0.017	1.463	0.015
	24	0.258	0.017	0.054	0.012	0.144	0.067	0.423	0.017	0.878	0.014
sur		724.000									
	1	0.164	0.046	0.107	0.055	2.766	0.018	2.616	0.023	5.654	0.014
	2	0.186	0.034	0.122	0.035	4.009	0.012	3.169	0.020	7.486	0.011
	3	0.201	0.036	0.167	0.028	6.083	0.010	3.502	0.024	9.953	0.010
	4	0.215	0.036	0.219	0.025	8.914	0.009	3.174	0.031	12.522	0.010
	5	0.250	0.034	0.260	0.024	11.993	0.009	2.559	0.039	15.062	0.010
	6	0.294	0.032	0.329	0.023	14.362	0.009	1.620	0.047	16.605	0.009
	7	0.320	0.031	0.357	0.021	15.866	0.009	0.854	0.063	17.397	0.009
	8	0.346	0.031	0.399	0.021	16.637	0.009	0.571	0.113	17.954	0.009
	9	0.331	0.029	0.394	0.020	16.837	0.009	0.339	0.100	17.901	0.008
	10	0.345	0.030	0.391	0.020	16.896	0.009	0.297	0.112	17.929	0.008
	11	0.339	0.030	0.371	0.020	16.399	0.009	0.374	0.109	17.482	0.009
	12	0.304	0.031	0.354	0.022	15.654	0.009	0.481	0.093	16.793	0.009
	13	0.267	0.032	0.307	0.024	14.341	0.009	0.946	0.073	15.861	0.009
	14	0.218	0.035	0.248	0.024	12.191	0.009	1.611	0.053	14.268	0.010
	15	0.174	0.037	0.206	0.030	9.510	0.009	2.144	0.045	12.035	0.011
	16	0.136	0.042	0.160	0.027	6.576	0.010	2.597	0.033	9.469	0.011
	17	0.119	0.040	0.112	0.034	4.223	0.011	2.779	0.025	7.233	0.011
	18	0.160	0.044	0.083	0.042	2.712	0.013	2.511	0.021	5.466	0.012

32,500 MWD/MTU burnup - B&W 15x15 fuel element 2.9 w/o U235 BPRA Curies 331.00

5.0 YR	5.0 YR	5.0 YR	5.0 YR			dwg3443			TP Curies		0.00
	h4n5d11m		h4n5d11m		h4p5d11m	4q5d11m	h4c5d11n		Num of assemblies		32
					h4r5d11m						
					h4p5e08m	h4q5e07m					
					h4r5e07m						
		neutron		phot (n,p)		phot		cobalt		total	
		value	rel err	value	rel err	value	rel err	value	rel err	value	rel err
	19	0.196	0.030	0.060	0.049	2.077	0.026	2.305	0.017	4.639	0.014
	20	0.186	0.022	0.046	0.045	0.908	0.020	1.137	0.020	2.278	0.013
	21	0.227	0.023	0.035	0.037	0.585	0.028	0.744	0.020	1.591	0.014
	22	0.239	0.020	0.031	0.041	0.401	0.036	0.506	0.033	1.178	0.019
	23	0.236	0.022	0.032	0.035	0.288	0.048	0.353	0.033	0.909	0.021
	24	0.194	0.017	0.028	0.015	0.179	0.035	0.270	0.019	0.672	0.013
tal		112.000									
sur		918.000									
	1	1.320	0.031	0.626	0.028	0.044	0.055	0.307	0.131	2.298	0.026
	2	1.213	0.014	0.626	0.014	0.046	0.030	0.262	0.061	2.147	0.012
	3	1.100	0.012	0.543	0.011	0.173	0.037	0.360	0.031	2.176	0.009
	4	1.029	0.019	0.433	0.016	0.786	0.046	0.964	0.029	3.212	0.016
	5	0.907	0.023	0.365	0.024	1.193	0.054	1.467	0.035	3.931	0.022
	6	0.663	0.025	0.265	0.024	1.027	0.058	1.771	0.043	3.726	0.026
	7	1.819	0.017	0.143	0.015	0.567	0.036	2.552	0.017	5.081	0.011
	8	1.412	0.017	0.075	0.021	0.242	0.035	1.130	0.016	2.859	0.011
	9	0.886	0.092	0.054	0.176	0.128	0.068	0.657	0.056	1.724	0.052
sur		919.000									
	1	0.477	0.041	0.190	0.040	0.184	0.040	0.350	0.064	1.201	0.026
	2	0.459	0.017	0.193	0.021	0.195	0.041	0.361	0.033	1.208	0.014
	3	0.436	0.016	0.168	0.016	0.228	0.043	0.402	0.028	1.234	0.014
	4	0.409	0.021	0.149	0.022	0.249	0.047	0.441	0.031	1.247	0.016
	5	0.424	0.031	0.136	0.027	0.251	0.051	0.465	0.031	1.277	0.018
	6	0.415	0.021	0.124	0.025	0.264	0.053	0.514	0.028	1.317	0.017
	7	0.401	0.015	0.105	0.021	0.231	0.045	0.600	0.023	1.337	0.014
	8	0.381	0.017	0.078	0.015	0.172	0.033	0.614	0.016	1.244	0.010
	9	0.397	0.074	0.073	0.088	0.181	0.054	0.783	0.055	1.433	0.037
tal		122.000									
sur		718.000									
	1	2.902	0.033	0.278	0.033	6.526	0.067	17.009	0.015	26.715	0.019
sur		722.000									
	1	0.338	0.075	0.129	0.165	4.707	0.065	5.325	0.041	10.500	0.036
sur		719.000									
	1	2.546	0.027	0.114	0.064	9.789	0.061	18.319	0.013	30.769	0.021
sur		723.000									
	1	0.372	0.070	0.064	0.126	4.581	0.080	5.003	0.034	10.019	0.040
tal		132.000									
sur		728.000									
	1	0.298	0.036	0.086	0.049	1.591	0.038	3.268	0.014	5.243	0.015
	2	0.250	0.033	0.129	0.035	2.705	0.016	5.317	0.015	8.401	0.011
	3	0.189	0.044	0.201	0.029	6.032	0.011	7.555	0.021	13.978	0.012
	4	0.284	0.046	0.300	0.027	12.360	0.010	6.782	0.029	19.727	0.012
	5	0.411	0.040	0.413	0.022	19.103	0.009	3.685	0.040	23.612	0.010
	6	0.486	0.035	0.524	0.020	23.237	0.010	1.171	0.067	25.418	0.010

32,500 MWD/MTU burnup - B&W 15x15 fuel element 2.9 w/o U235 BPRA Curies 331.00

5.0 YR 5.0 YR 5.0 YR 5.0 YR dwg3443 TP Curies 0.00

h4n5d11m h4n5d11m h4p5d11m 4q5d11m h4c5d11n Num of assemblies 32

h4r5d11m

h4p5e08m h4q5e07m

h4r5e07m

		neutron		phot (n,p)		phot		cobalt		total	
		value	rel err	value	rel err	value	rel err	value	rel err	value	rel err
	7	0.555	0.033	0.597	0.020	25.039	0.010	0.349	0.132	26.541	0.010
	8	0.580	0.032	0.649	0.018	25.312	0.010	0.180	0.190	26.720	0.010
	9	0.579	0.031	0.661	0.019	25.188	0.010	0.078	0.279	26.506	0.010
	10	0.572	0.032	0.645	0.019	25.003	0.010	0.079	0.322	26.299	0.010
	11	0.568	0.032	0.616	0.020	24.426	0.010	0.148	0.273	25.758	0.010
	12	0.515	0.033	0.549	0.020	24.104	0.010	0.233	0.200	25.401	0.010
	13	0.435	0.035	0.480	0.021	22.790	0.010	0.541	0.124	24.245	0.010
	14	0.339	0.039	0.369	0.022	19.663	0.010	1.557	0.074	21.927	0.010
	15	0.234	0.046	0.280	0.028	13.797	0.010	3.631	0.043	17.942	0.011
	16	0.152	0.057	0.192	0.033	7.814	0.010	5.838	0.027	13.996	0.013
	17	0.092	0.061	0.114	0.034	3.424	0.012	5.837	0.020	9.468	0.013
	18	0.149	0.028	0.068	0.045	1.407	0.018	3.820	0.019	5.443	0.014
	19	0.355	0.024	0.050	0.041	1.593	0.046	3.178	0.012	5.176	0.016
	20	0.428	0.018	0.041	0.034	0.342	0.050	1.156	0.023	1.967	0.017
	21	0.520	0.018	0.038	0.025	0.188	0.062	0.594	0.091	1.339	0.042
	22	0.489	0.022	0.043	0.018	0.197	0.078	0.566	0.043	1.295	0.024
	23	0.384	0.021	0.047	0.022	0.210	0.091	0.525	0.017	1.166	0.019
	24	0.249	0.019	0.044	0.014	0.151	0.056	0.440	0.024	0.884	0.016
sur		731.000									
	1	0.209	0.041	0.094	0.051	2.181	0.026	3.028	0.018	5.511	0.014
	2	0.215	0.033	0.128	0.034	3.511	0.013	4.266	0.017	8.120	0.011
	3	0.214	0.038	0.184	0.030	6.210	0.010	5.184	0.022	11.792	0.011
	4	0.254	0.043	0.265	0.027	10.569	0.009	4.624	0.029	15.711	0.011
	5	0.336	0.038	0.325	0.022	15.176	0.009	3.270	0.038	19.108	0.010
	6	0.366	0.033	0.412	0.022	18.518	0.009	1.596	0.052	20.893	0.009
	7	0.415	0.031	0.480	0.020	20.164	0.009	0.760	0.087	21.818	0.009
	8	0.462	0.030	0.505	0.020	20.740	0.009	0.296	0.118	22.003	0.009
	9	0.449	0.030	0.522	0.020	20.912	0.009	0.192	0.157	22.076	0.009
	10	0.456	0.032	0.500	0.019	20.793	0.009	0.195	0.168	21.944	0.009
	11	0.440	0.032	0.497	0.020	20.255	0.009	0.268	0.162	21.460	0.009
	12	0.404	0.031	0.447	0.022	19.841	0.009	0.319	0.133	21.011	0.009
	13	0.351	0.033	0.376	0.021	18.096	0.009	0.770	0.092	19.593	0.010
	14	0.265	0.039	0.314	0.025	15.588	0.009	1.710	0.059	17.877	0.010
	15	0.206	0.039	0.241	0.027	11.622	0.010	2.863	0.042	14.932	0.011
	16	0.146	0.046	0.174	0.029	7.172	0.010	3.885	0.029	11.376	0.012
	17	0.110	0.049	0.121	0.038	3.988	0.011	4.078	0.022	8.297	0.012
	18	0.158	0.031	0.071	0.035	2.060	0.014	3.210	0.020	5.499	0.013
	19	0.259	0.027	0.052	0.045	1.860	0.034	2.711	0.014	4.881	0.015
	20	0.273	0.020	0.042	0.053	0.546	0.028	1.270	0.020	2.131	0.014
	21	0.342	0.019	0.037	0.043	0.329	0.044	0.695	0.041	1.403	0.023
	22	0.354	0.021	0.035	0.026	0.242	0.064	0.422	0.035	1.053	0.021
	23	0.323	0.022	0.035	0.021	0.205	0.072	0.408	0.045	0.971	0.025
	24	0.230	0.019	0.035	0.014	0.170	0.045	0.355	0.017	0.789	0.013
tal		142.000									

32,500 MWD/MTU burnup - B&W 15x15 fuel element 2.9 w/o U235 BPRA Curies 331.00

5.0 YR 5.0 YR 5.0 YR 5.0 YR dwg3443 TP Curies 0.00

h4n5d11m h4n5d11m h4p5d11m 4q5d11m h4c5d11n Num of assemblies 32

h4r5d11m

h4p5e08m h4q5e07m

h4r5e07m

		neutron value	rel err	phot (n,p) value	rel err	phot value	rel err	cobalt value	rel err	total value	rel err
sur		1716.000									
	1	3.017	0.067	0.366	0.112	5.336	0.133	16.481	0.031	25.200	0.036
sur		726.000									
	1	1.090	0.044	0.142	0.061	4.436	0.072	9.387	0.023	15.056	0.026
sur		729.000									
	1	0.583	0.064	0.105	0.067	4.459	0.069	7.190	0.031	12.337	0.031
sur		727.000									
	1	1.024	0.044	0.059	0.089	6.731	0.074	9.841	0.019	17.655	0.030
sur		730.000									
	1	0.593	0.056	0.056	0.114	5.755	0.080	7.388	0.026	13.793	0.036
tal		104.000									
sur		inner 6									
	1	12.997	0.021	0.331	0.035	2.117	0.039	13.421	0.017	28.866	0.013
sur		mid 6									
	1	4.841	0.025	0.151	0.041	0.555	0.040	3.764	0.018	9.311	0.015
sur		outer 6									
	1	2.044	0.035	0.075	0.047	0.190	0.053	1.134	0.030	3.443	0.023

Appendix E: Single Cask Dose Rates Versus Distance

The pages in this appendix are the output from the EXCEL files used to analyze the data from the calculations of the configuration 1 geometry. This output is dose versus distance from a single HI-STORM 100 cask. Appendix D describes some of the format of these pages. In all EXCEL pages shown in this appendix, the contribution from BPRAs is included in the photon and cobalt dose components.

Pages E-2 through E-4 of the output are the dose rates in mrem/yr based on a 8760 hour occupancy factor for a burnup of 32,500 MWD/MTU and a cooling time of 5 years. Near the top of the page the number of hours in a year is shown to be 8760.

Pages E-5 through E-7 of the output are the dose rates in mrem/hr. Near the top of the page the number of hours in a year is shown to be 1 which results in mrem/hr.

The output show the dose rate versus distance for particles leaving the top of the overpack and also for particles leaving the side of the overpack. The total dose versus distance is also provided. These results are used in Appendix G to determine the dose rate as a function of the distance from the facility.

Pages E-8 through E-11 of the output are dose rates in mrem/yr based on a 8760 hour occupancy factor for cooling times between 5 years and 20 years. On these pages, only the total dose rates for the top and side of the cask are listed. The curies of cobalt-60 used for the BPRA are shown. The BPRA source was also aged along with the fuel out to a maximum BPRA age of 20 years. Since the BPRAs are assumed to be 13 years at initial loading, the source decreases until the fuel is 12 years old and then the BPRA source was conservatively assumed to remain constant.

Pages E-12 through E-14 compare the dose as a function of distance for the MPCs and burnup and cooling time combinations shown in Appendix A. It is demonstrated that the MPC-32 with a burnup and cooling time of 32,500 MWD/MTU and 5 year cooling bounds the other combinations for side and total dose but not top dose. However since it is bounding for the total dose it was used in the final dose rate calculations presented in Appendix G.

A more detailed discussion of the calculations is provided in Section 7.

32,500 MWD/MTU burnup - B&W 15x15 fuel element2.9 w/o U235 Curies Co for BPRAs 331.0
5.0 YR 5.0 YR 5.0 YR 5.0 YR num fuel 32
hours/yr 8760

h4n5d12m h4n5d12m h4r5d12m 4p5d12m h4c5d12m
h4q5d12m

Side Dose mrem/year

dis		neutron		phot (n,p)		phot		cobalt		total	
meter	feet	value	rel err	value	rel err	value	rel err	value	rel err	value	rel err
1	3.281	2.12E+03	0.020	1.93E+03	0.011	7.90E+04	0.006	2.35E+04	0.015	1.06E+05	0.006
3.048	10	1.03E+03	0.020	9.16E+02	0.012	4.14E+04	0.006	8.30E+03	0.017	5.17E+04	0.005
6.096	20	4.61E+02	0.020	4.09E+02	0.014	2.03E+04	0.006	3.53E+03	0.019	2.47E+04	0.005
10	32.808	2.11E+02	0.021	1.89E+02	0.017	1.02E+04	0.006	1.72E+03	0.021	1.23E+04	0.006
12.192	40	1.51E+02	0.021	1.36E+02	0.018	7.35E+03	0.006	1.26E+03	0.021	8.89E+03	0.006
18.288	60	7.80E+01	0.025	6.66E+01	0.022	3.62E+03	0.007	6.11E+02	0.023	4.38E+03	0.007
24.384	80	4.85E+01	0.035	3.92E+01	0.026	2.08E+03	0.008	3.62E+02	0.026	2.53E+03	0.007
30.48	100	3.13E+01	0.034	2.53E+01	0.028	1.33E+03	0.009	2.40E+02	0.028	1.63E+03	0.008
45.72	150	1.32E+01	0.033	1.09E+01	0.034	5.73E+02	0.010	1.07E+02	0.032	7.04E+02	0.010
50	164.042	1.18E+01	0.034	9.08E+00	0.034	4.75E+02	0.011	8.58E+01	0.032	5.82E+02	0.010
60.96	200	7.71E+00	0.053	6.22E+00	0.039	3.07E+02	0.012	5.38E+01	0.034	3.74E+02	0.011
91.44	300	3.28E+00	0.048	2.57E+00	0.051	1.21E+02	0.014	2.21E+01	0.040	1.48E+02	0.013
100	328.084	2.49E+00	0.045	2.12E+00	0.053	9.78E+01	0.014	1.74E+01	0.041	1.20E+02	0.013
121.92	400	1.48E+00	0.061	1.27E+00	0.057	5.98E+01	0.015	1.04E+01	0.046	7.30E+01	0.014
150	492.126	8.99E-01	0.054	7.49E-01	0.067	3.44E+01	0.017	5.70E+00	0.051	4.17E+01	0.016
200	656.168	4.15E-01	0.059	3.63E-01	0.066	1.54E+01	0.020	2.44E+00	0.052	1.86E+01	0.018
250	820.21	2.06E-01	0.086	1.89E-01	0.076	7.77E+00	0.022	1.07E+00	0.063	9.24E+00	0.020
300	984.252	1.12E-01	0.071	1.08E-01	0.079	4.32E+00	0.024	5.48E-01	0.060	5.08E+00	0.021
350	1148.294	6.95E-02	0.074	7.71E-02	0.097	2.33E+00	0.026	3.20E-01	0.068	2.79E+00	0.023
400	1312.336	3.90E-02	0.065	4.91E-02	0.099	1.35E+00	0.028	1.77E-01	0.067	1.62E+00	0.025
450	1476.378	2.63E-02	0.076	3.27E-02	0.108	8.00E-01	0.029	1.10E-01	0.075	9.69E-01	0.026
500	1640.42	1.64E-02	0.073	2.29E-02	0.110	4.92E-01	0.031	7.18E-02	0.084	6.03E-01	0.028
550	1804.462	1.18E-02	0.105	1.52E-02	0.105	3.17E-01	0.034	4.51E-02	0.084	3.90E-01	0.030
600	1968.504	7.70E-03	0.103	1.24E-02	0.103	2.15E-01	0.033	2.67E-02	0.097	2.62E-01	0.030
650	2132.546	4.57E-03	0.077	9.13E-03	0.103	1.37E-01	0.036	1.60E-02	0.098	1.67E-01	0.031
700	2296.588	3.85E-03	0.092	6.22E-03	0.097	9.08E-02	0.036	8.73E-03	0.096	1.10E-01	0.031
750	2460.63	2.19E-03	0.097	4.71E-03	0.106	5.86E-02	0.036	6.68E-03	0.098	7.22E-02	0.031
800	2624.672	1.66E-03	0.075	3.52E-03	0.107	3.86E-02	0.036	3.67E-03	0.085	4.75E-02	0.031
850	2788.714	1.12E-03	0.105	2.76E-03	0.111	2.76E-02	0.037	2.65E-03	0.101	3.41E-02	0.032
900	2952.756	6.35E-04	0.078	2.03E-03	0.120	1.90E-02	0.038	1.58E-03	0.092	2.33E-02	0.033
950	3116.798	4.72E-04	0.084	1.56E-03	0.129	1.28E-02	0.037	1.09E-03	0.096	1.59E-02	0.033
1000	3280.84	2.96E-04	0.100	1.24E-03	0.137	8.31E-03	0.040	8.05E-04	0.119	1.07E-02	0.037

32,500 MWD/MTU burnup - B&W 15x15 fuel element2.9 w/o U235 Curies Co for BPRAs 331.0
5.0 YR 5.0 YR 5.0 YR 5.0 YR num fuel 32
hours/yr 8760

Top Dose mrem/year

dis meter	feet	h4n5e07m neutron value	rel err	h4n5e07m phot (n,p) value	rel err	h4r5e10m h4p5e11m h4c5e07m h4q5e10m phot value	rel err	cobalt value	rel err	total value	rel err
1	3.281	2.02E+01	0.027	1.73E+00	0.046	8.46E-01	0.050	2.28E+00	0.046	2.50E+01	0.022
3.048	10	2.11E+01	0.018	1.30E+00	0.031	1.03E+00	0.051	2.70E+00	0.029	2.61E+01	0.015
6.096	20	1.95E+01	0.015	1.10E+00	0.027	9.77E-01	0.045	2.72E+00	0.024	2.43E+01	0.012
10	32.808	1.57E+01	0.016	8.54E-01	0.023	8.49E-01	0.039	2.28E+00	0.022	1.97E+01	0.013
12.192	40	1.37E+01	0.012	7.73E-01	0.033	7.42E-01	0.039	2.06E+00	0.022	1.72E+01	0.010
18.288	60	9.81E+00	0.013	5.27E-01	0.023	5.68E-01	0.041	1.53E+00	0.020	1.24E+01	0.010
24.384	80	7.18E+00	0.013	3.98E-01	0.025	4.34E-01	0.038	1.19E+00	0.020	9.21E+00	0.010
30.48	100	5.60E+00	0.013	3.14E-01	0.032	3.58E-01	0.039	1.00E+00	0.021	7.28E+00	0.011
45.72	150	3.07E+00	0.014	1.77E-01	0.028	2.28E-01	0.039	6.25E-01	0.020	4.10E+00	0.011
50	164.042	2.68E+00	0.014	1.62E-01	0.029	2.04E-01	0.041	5.76E-01	0.021	3.63E+00	0.011
60.96	200	1.92E+00	0.014	1.11E-01	0.025	1.55E-01	0.039	4.34E-01	0.020	2.62E+00	0.011
91.44	300	8.47E-01	0.015	6.06E-02	0.024	8.30E-02	0.038	2.37E-01	0.020	1.23E+00	0.011
100	328.084	6.90E-01	0.015	4.96E-02	0.026	7.08E-02	0.036	2.08E-01	0.020	1.02E+00	0.011
121.92	400	4.51E-01	0.020	3.50E-02	0.049	4.72E-02	0.038	1.42E-01	0.021	6.75E-01	0.015
150	492.126	2.54E-01	0.020	2.15E-02	0.026	3.13E-02	0.040	9.23E-02	0.021	3.99E-01	0.014
200	656.168	1.07E-01	0.022	1.03E-02	0.026	1.52E-02	0.055	4.42E-02	0.020	1.77E-01	0.015
250	820.21	4.87E-02	0.023	5.87E-03	0.033	7.15E-03	0.039	2.26E-02	0.021	8.43E-02	0.015
300	984.252	2.34E-02	0.024	3.45E-03	0.029	3.75E-03	0.039	1.22E-02	0.022	4.28E-02	0.015
350	1148.294	1.19E-02	0.028	2.17E-03	0.038	2.10E-03	0.048	6.70E-03	0.025	2.29E-02	0.017
400	1312.336	6.59E-03	0.039	1.31E-03	0.034	1.08E-03	0.041	3.74E-03	0.022	1.27E-02	0.022
450	1476.378	3.49E-03	0.040	9.00E-04	0.047	6.39E-04	0.053	2.05E-03	0.022	7.08E-03	0.022
500	1640.42	1.97E-03	0.043	5.98E-04	0.036	3.36E-04	0.041	1.14E-03	0.022	4.04E-03	0.023
550	1804.462	1.06E-03	0.040	4.03E-04	0.041	1.89E-04	0.044	6.54E-04	0.024	2.31E-03	0.021
600	1968.504	5.91E-04	0.057	2.81E-04	0.042	1.18E-04	0.052	3.94E-04	0.026	1.38E-03	0.027
650	2132.546	3.96E-04	0.076	1.98E-04	0.047	6.63E-05	0.061	2.23E-04	0.025	8.83E-04	0.037
700	2296.588	1.99E-04	0.059	1.54E-04	0.043	3.75E-05	0.047	1.32E-04	0.026	5.22E-04	0.027
750	2460.63	1.32E-04	0.079	9.77E-05	0.034	2.20E-05	0.054	7.39E-05	0.027	3.25E-04	0.034
800	2624.672	8.20E-05	0.087	7.76E-05	0.042	1.19E-05	0.043	4.55E-05	0.028	2.17E-04	0.037
850	2788.714	4.95E-05	0.090	5.67E-05	0.044	7.45E-06	0.047	2.77E-05	0.032	1.41E-04	0.037
900	2952.756	2.97E-05	0.081	4.24E-05	0.053	5.05E-06	0.060	1.61E-05	0.029	9.33E-05	0.036
950	3116.798	1.81E-05	0.103	3.20E-05	0.039	2.84E-06	0.071	9.62E-06	0.029	6.26E-05	0.036
1000	3280.84	9.43E-06	0.123	2.95E-05	0.060	1.58E-06	0.069	5.30E-06	0.033	4.58E-05	0.046

32,500 MWD/MTU burnup - B&W 15x15 fuel element2.9 w/o U235 Curies Co for BPRAs 331.0
5.0 YR 5.0 YR 5.0 YR 5.0 YR num fuel 32
hours/yr 8760

Total Dose mrem/year

dis		neutron		phot (n,p)		phot		cobalt		total	
meter	feet	value	rel err	value	rel err	value	rel err	value	rel err	value	rel err
1	3.281	2.14E+03	0.020	1.93E+03	0.011	7.90E+04	0.006	2.35E+04	0.015	1.07E+05	0.006
3.048	10	1.06E+03	0.019	9.17E+02	0.012	4.15E+04	0.006	8.30E+03	0.017	5.17E+04	0.005
6.096	20	4.81E+02	0.019	4.10E+02	0.014	2.03E+04	0.006	3.54E+03	0.019	2.48E+04	0.005
10	32.808	2.27E+02	0.020	1.90E+02	0.017	1.02E+04	0.006	1.73E+03	0.021	1.23E+04	0.006
12.192	40	1.65E+02	0.019	1.37E+02	0.018	7.35E+03	0.006	1.26E+03	0.021	8.91E+03	0.006
18.288	60	8.78E+01	0.022	6.71E+01	0.022	3.62E+03	0.007	6.12E+02	0.023	4.39E+03	0.007
24.384	80	5.57E+01	0.031	3.96E+01	0.026	2.08E+03	0.008	3.63E+02	0.026	2.54E+03	0.007
30.48	100	3.69E+01	0.029	2.56E+01	0.028	1.33E+03	0.009	2.41E+02	0.028	1.63E+03	0.008
45.72	150	1.63E+01	0.027	1.11E+01	0.034	5.74E+02	0.010	1.07E+02	0.031	7.08E+02	0.010
50	164.042	1.45E+01	0.028	9.24E+00	0.034	4.75E+02	0.011	8.64E+01	0.031	5.85E+02	0.010
60.96	200	9.63E+00	0.042	6.33E+00	0.039	3.07E+02	0.012	5.43E+01	0.034	3.77E+02	0.011
91.44	300	4.12E+00	0.038	2.63E+00	0.050	1.21E+02	0.014	2.23E+01	0.039	1.50E+02	0.013
100	328.084	3.18E+00	0.036	2.17E+00	0.051	9.79E+01	0.014	1.76E+01	0.040	1.21E+02	0.013
121.92	400	1.93E+00	0.047	1.30E+00	0.055	5.99E+01	0.015	1.06E+01	0.045	7.37E+01	0.014
150	492.126	1.15E+00	0.043	7.70E-01	0.065	3.44E+01	0.017	5.79E+00	0.050	4.21E+01	0.016
200	656.168	5.23E-01	0.047	3.73E-01	0.064	1.54E+01	0.020	2.49E+00	0.051	1.88E+01	0.018
250	820.21	2.55E-01	0.070	1.95E-01	0.074	7.78E+00	0.022	1.09E+00	0.061	9.32E+00	0.020
300	984.252	1.35E-01	0.059	1.12E-01	0.077	4.32E+00	0.024	5.60E-01	0.059	5.13E+00	0.021
350	1148.294	8.14E-02	0.063	7.93E-02	0.095	2.33E+00	0.026	3.27E-01	0.066	2.82E+00	0.023
400	1312.336	4.56E-02	0.056	5.04E-02	0.096	1.35E+00	0.028	1.80E-01	0.066	1.63E+00	0.025
450	1476.378	2.98E-02	0.067	3.36E-02	0.105	8.00E-01	0.029	1.12E-01	0.074	9.76E-01	0.026
500	1640.42	1.84E-02	0.065	2.35E-02	0.107	4.92E-01	0.031	7.29E-02	0.082	6.07E-01	0.027
550	1804.462	1.29E-02	0.096	1.56E-02	0.102	3.18E-01	0.034	4.58E-02	0.083	3.92E-01	0.029
600	1968.504	8.29E-03	0.095	1.27E-02	0.100	2.15E-01	0.033	2.71E-02	0.095	2.64E-01	0.029
650	2132.546	4.96E-03	0.071	9.33E-03	0.100	1.37E-01	0.036	1.63E-02	0.097	1.68E-01	0.031
700	2296.588	4.05E-03	0.087	6.37E-03	0.095	9.08E-02	0.036	8.86E-03	0.095	1.10E-01	0.031
750	2460.63	2.32E-03	0.092	4.81E-03	0.104	5.86E-02	0.036	6.76E-03	0.097	7.25E-02	0.031
800	2624.672	1.74E-03	0.072	3.60E-03	0.105	3.87E-02	0.036	3.71E-03	0.084	4.77E-02	0.031
850	2788.714	1.17E-03	0.101	2.82E-03	0.109	2.76E-02	0.037	2.67E-03	0.100	3.43E-02	0.032
900	2952.756	6.64E-04	0.075	2.07E-03	0.118	1.90E-02	0.038	1.59E-03	0.091	2.34E-02	0.033
950	3116.798	4.90E-04	0.081	1.59E-03	0.127	1.28E-02	0.037	1.10E-03	0.096	1.59E-02	0.033
1000	3280.84	3.05E-04	0.097	1.27E-03	0.134	8.31E-03	0.040	8.11E-04	0.118	1.07E-02	0.036

32,500 MWD/MTU burnup - B&W 15x15 fuel element2.9 w/o U235 Curies Co for BPRAs 331.0
5.0 YR 5.0 YR 5.0 YR 5.0 YR num fuel 32
hours/yr 1

h4n5d12m h4n5d12m h4r5d12m 4p5d12m h4c5d12m
h4q5d12m

Side Dose mrem/year

dis		neutron		phot (n,p)		phot		cobalt		total	
meter	feet	value	rel err	value	rel err	value	rel err	value	rel err	value	rel err
1	3.281	2.42E-01	0.020	2.20E-01	0.011	9.01E+00	0.006	2.68E+00	0.015	1.22E+01	0.006
3.048	10	1.18E-01	0.020	1.05E-01	0.012	4.73E+00	0.006	9.48E-01	0.017	5.90E+00	0.005
6.096	20	5.27E-02	0.020	4.67E-02	0.014	2.32E+00	0.006	4.03E-01	0.019	2.82E+00	0.005
10	32.808	2.41E-02	0.021	2.16E-02	0.017	1.16E+00	0.006	1.97E-01	0.021	1.40E+00	0.006
12.192	40	1.72E-02	0.021	1.55E-02	0.018	8.39E-01	0.006	1.44E-01	0.021	1.02E+00	0.006
18.288	60	8.91E-03	0.025	7.60E-03	0.022	4.13E-01	0.007	6.97E-02	0.023	5.00E-01	0.007
24.384	80	5.54E-03	0.035	4.48E-03	0.026	2.37E-01	0.008	4.13E-02	0.026	2.88E-01	0.007
30.48	100	3.57E-03	0.034	2.89E-03	0.028	1.52E-01	0.009	2.74E-02	0.028	1.86E-01	0.008
45.72	150	1.51E-03	0.033	1.25E-03	0.034	6.55E-02	0.010	1.22E-02	0.032	8.04E-02	0.010
50	164.042	1.34E-03	0.034	1.04E-03	0.034	5.42E-02	0.011	9.80E-03	0.032	6.64E-02	0.010
60.96	200	8.80E-04	0.053	7.10E-04	0.039	3.50E-02	0.012	6.14E-03	0.034	4.27E-02	0.011
91.44	300	3.74E-04	0.048	2.94E-04	0.051	1.38E-02	0.014	2.52E-03	0.040	1.69E-02	0.013
100	328.084	2.84E-04	0.045	2.42E-04	0.053	1.12E-02	0.014	1.99E-03	0.041	1.37E-02	0.013
121.92	400	1.69E-04	0.061	1.45E-04	0.057	6.83E-03	0.015	1.19E-03	0.046	8.33E-03	0.014
150	492.126	1.03E-04	0.054	8.55E-05	0.067	3.92E-03	0.017	6.51E-04	0.051	4.76E-03	0.016
200	656.168	4.74E-05	0.059	4.15E-05	0.066	1.75E-03	0.020	2.79E-04	0.052	2.12E-03	0.018
250	820.21	2.36E-05	0.086	2.16E-05	0.076	8.87E-04	0.022	1.22E-04	0.063	1.05E-03	0.020
300	984.252	1.28E-05	0.071	1.24E-05	0.079	4.93E-04	0.024	6.25E-05	0.060	5.80E-04	0.021
350	1148.294	7.93E-06	0.074	8.80E-06	0.097	2.66E-04	0.026	3.65E-05	0.068	3.19E-04	0.023
400	1312.336	4.45E-06	0.065	5.61E-06	0.099	1.54E-04	0.028	2.02E-05	0.067	1.84E-04	0.025
450	1476.378	3.00E-06	0.076	3.73E-06	0.108	9.13E-05	0.029	1.26E-05	0.075	1.11E-04	0.026
500	1640.42	1.88E-06	0.073	2.61E-06	0.110	5.61E-05	0.031	8.19E-06	0.084	6.88E-05	0.028
550	1804.462	1.35E-06	0.105	1.74E-06	0.105	3.62E-05	0.034	5.15E-06	0.084	4.45E-05	0.030
600	1968.504	8.79E-07	0.103	1.42E-06	0.103	2.46E-05	0.033	3.05E-06	0.097	2.99E-05	0.030
650	2132.546	5.21E-07	0.077	1.04E-06	0.103	1.56E-05	0.036	1.83E-06	0.098	1.90E-05	0.031
700	2296.588	4.40E-07	0.092	7.10E-07	0.097	1.04E-05	0.036	9.96E-07	0.096	1.25E-05	0.031
750	2460.63	2.50E-07	0.097	5.38E-07	0.106	6.69E-06	0.036	7.63E-07	0.098	8.24E-06	0.031
800	2624.672	1.90E-07	0.075	4.02E-07	0.107	4.41E-06	0.036	4.19E-07	0.085	5.42E-06	0.031
850	2788.714	1.27E-07	0.105	3.16E-07	0.111	3.15E-06	0.037	3.02E-07	0.101	3.90E-06	0.032
900	2952.756	7.25E-08	0.078	2.31E-07	0.120	2.17E-06	0.038	1.80E-07	0.092	2.66E-06	0.033
950	3116.798	5.38E-08	0.084	1.78E-07	0.129	1.46E-06	0.037	1.25E-07	0.096	1.81E-06	0.033
1000	3280.84	3.38E-08	0.100	1.42E-07	0.137	9.48E-07	0.040	9.19E-08	0.119	1.22E-06	0.037

32,500 MWD/MTU burnup - B&W 15x15 fuel element2.9 w/o U235 Curies Co for BPRAs 331.0
5.0 YR 5.0 YR 5.0 YR 5.0 YR num fuel 32
hours/yr 1

Top Dose mrem/year

dis meter	feet	h4n5e07m neutron value	rel err	h4n5e07m phot (n,p) value	rel err	h4r5e10m h4q5e10m phot value	rel err	h4p5e11m h4c5e07m cobalt value	rel err	total value	rel err
1	3.281	2.30E-03	0.027	1.98E-04	0.046	9.65E-05	0.050	2.61E-04	0.046	2.86E-03	0.022
3.048	10	2.41E-03	0.018	1.48E-04	0.031	1.18E-04	0.051	3.08E-04	0.029	2.98E-03	0.015
6.096	20	2.23E-03	0.015	1.25E-04	0.027	1.12E-04	0.045	3.10E-04	0.024	2.78E-03	0.012
10	32.808	1.79E-03	0.016	9.75E-05	0.023	9.69E-05	0.039	2.60E-04	0.022	2.24E-03	0.013
12.192	40	1.56E-03	0.012	8.83E-05	0.033	8.47E-05	0.039	2.35E-04	0.022	1.97E-03	0.010
18.288	60	1.12E-03	0.013	6.01E-05	0.023	6.48E-05	0.041	1.75E-04	0.020	1.42E-03	0.010
24.384	80	8.20E-04	0.013	4.54E-05	0.025	4.95E-05	0.038	1.36E-04	0.020	1.05E-03	0.010
30.48	100	6.40E-04	0.013	3.59E-05	0.032	4.08E-05	0.039	1.14E-04	0.021	8.31E-04	0.011
45.72	150	3.51E-04	0.014	2.02E-05	0.028	2.60E-05	0.039	7.13E-05	0.020	4.68E-04	0.011
50	164.042	3.06E-04	0.014	1.85E-05	0.029	2.33E-05	0.041	6.58E-05	0.021	4.14E-04	0.011
60.96	200	2.19E-04	0.014	1.26E-05	0.025	1.77E-05	0.039	4.96E-05	0.020	2.99E-04	0.011
91.44	300	9.67E-05	0.015	6.91E-06	0.024	9.48E-06	0.038	2.70E-05	0.020	1.40E-04	0.011
100	328.084	7.88E-05	0.015	5.66E-06	0.026	8.08E-06	0.036	2.38E-05	0.020	1.16E-04	0.011
121.92	400	5.15E-05	0.020	3.99E-06	0.049	5.39E-06	0.038	1.62E-05	0.021	7.71E-05	0.015
150	492.126	2.90E-05	0.020	2.46E-06	0.026	3.57E-06	0.040	1.05E-05	0.021	4.56E-05	0.014
200	656.168	1.23E-05	0.022	1.17E-06	0.026	1.74E-06	0.055	5.05E-06	0.020	2.02E-05	0.015
250	820.21	5.56E-06	0.023	6.70E-07	0.033	8.16E-07	0.039	2.58E-06	0.021	9.63E-06	0.015
300	984.252	2.67E-06	0.024	3.94E-07	0.029	4.29E-07	0.039	1.39E-06	0.022	4.88E-06	0.015
350	1148.294	1.36E-06	0.028	2.48E-07	0.038	2.40E-07	0.048	7.65E-07	0.025	2.61E-06	0.017
400	1312.336	7.52E-07	0.039	1.50E-07	0.034	1.24E-07	0.041	4.26E-07	0.022	1.45E-06	0.022
450	1476.378	3.99E-07	0.040	1.03E-07	0.047	7.29E-08	0.053	2.33E-07	0.022	8.08E-07	0.022
500	1640.42	2.24E-07	0.043	6.82E-08	0.036	3.83E-08	0.041	1.30E-07	0.022	4.61E-07	0.023
550	1804.462	1.21E-07	0.040	4.60E-08	0.041	2.16E-08	0.044	7.47E-08	0.024	2.63E-07	0.021
600	1968.504	6.74E-08	0.057	3.21E-08	0.042	1.34E-08	0.052	4.50E-08	0.026	1.58E-07	0.027
650	2132.546	4.52E-08	0.076	2.26E-08	0.047	7.56E-09	0.061	2.55E-08	0.025	1.01E-07	0.037
700	2296.588	2.27E-08	0.059	1.76E-08	0.043	4.28E-09	0.047	1.50E-08	0.026	5.96E-08	0.027
750	2460.63	1.51E-08	0.079	1.11E-08	0.034	2.51E-09	0.054	8.44E-09	0.027	3.71E-08	0.034
800	2624.672	9.36E-09	0.087	8.86E-09	0.042	1.36E-09	0.043	5.19E-09	0.028	2.48E-08	0.037
850	2788.714	5.65E-09	0.090	6.47E-09	0.044	8.51E-10	0.047	3.16E-09	0.032	1.61E-08	0.037
900	2952.756	3.39E-09	0.081	4.84E-09	0.053	5.77E-10	0.060	1.84E-09	0.029	1.06E-08	0.036
950	3116.798	2.07E-09	0.103	3.65E-09	0.039	3.24E-10	0.071	1.10E-09	0.029	7.15E-09	0.036
1000	3280.84	1.08E-09	0.123	3.36E-09	0.060	1.80E-10	0.069	6.05E-10	0.033	5.23E-09	0.046

32,500 MWD/MTU burnup - B&W 15x15 fuel element2.9 w/o U235 Curies Co for BPRAs 331.0
5.0 YR 5.0 YR 5.0 YR 5.0 YR num fuel 32
hours/yr 1

Total Dose mrem/year

dis		neutron		phot (n,p)		phot		cobalt		total	
meter	feet	value	rel err	value	rel err	value	rel err	value	rel err	value	rel err
1	3.281	2.44E-01	0.020	2.20E-01	0.011	9.01E+00	0.006	2.68E+00	0.015	1.22E+01	0.006
3.048	10	1.21E-01	0.019	1.05E-01	0.012	4.73E+00	0.006	9.48E-01	0.017	5.91E+00	0.005
6.096	20	5.49E-02	0.019	4.68E-02	0.014	2.32E+00	0.006	4.04E-01	0.019	2.83E+00	0.005
10	32.808	2.59E-02	0.020	2.17E-02	0.017	1.16E+00	0.006	1.97E-01	0.021	1.40E+00	0.006
12.192	40	1.88E-02	0.019	1.56E-02	0.018	8.39E-01	0.006	1.44E-01	0.021	1.02E+00	0.006
18.288	60	1.00E-02	0.022	7.66E-03	0.022	4.13E-01	0.007	6.99E-02	0.023	5.01E-01	0.007
24.384	80	6.36E-03	0.031	4.52E-03	0.026	2.37E-01	0.008	4.14E-02	0.026	2.89E-01	0.007
30.48	100	4.21E-03	0.029	2.93E-03	0.028	1.52E-01	0.009	2.76E-02	0.028	1.87E-01	0.008
45.72	150	1.86E-03	0.027	1.27E-03	0.034	6.55E-02	0.010	1.23E-02	0.031	8.09E-02	0.010
50	164.042	1.65E-03	0.028	1.05E-03	0.034	5.42E-02	0.011	9.86E-03	0.031	6.68E-02	0.010
60.96	200	1.10E-03	0.042	7.22E-04	0.039	3.50E-02	0.012	6.19E-03	0.034	4.30E-02	0.011
91.44	300	4.71E-04	0.038	3.01E-04	0.050	1.38E-02	0.014	2.54E-03	0.039	1.71E-02	0.013
100	328.084	3.63E-04	0.036	2.48E-04	0.051	1.12E-02	0.014	2.01E-03	0.040	1.38E-02	0.013
121.92	400	2.20E-04	0.047	1.49E-04	0.055	6.84E-03	0.015	1.20E-03	0.045	8.41E-03	0.014
150	492.126	1.32E-04	0.043	8.79E-05	0.065	3.93E-03	0.017	6.61E-04	0.050	4.81E-03	0.016
200	656.168	5.97E-05	0.047	4.26E-05	0.064	1.76E-03	0.020	2.84E-04	0.051	2.14E-03	0.018
250	820.21	2.91E-05	0.070	2.23E-05	0.074	8.88E-04	0.022	1.25E-04	0.061	1.06E-03	0.020
300	984.252	1.55E-05	0.059	1.28E-05	0.077	4.93E-04	0.024	6.39E-05	0.059	5.85E-04	0.021
350	1148.294	9.29E-06	0.063	9.05E-06	0.095	2.66E-04	0.026	3.73E-05	0.066	3.22E-04	0.023
400	1312.336	5.20E-06	0.056	5.76E-06	0.096	1.54E-04	0.028	2.06E-05	0.066	1.86E-04	0.025
450	1476.378	3.40E-06	0.067	3.83E-06	0.105	9.14E-05	0.029	1.28E-05	0.074	1.11E-04	0.026
500	1640.42	2.10E-06	0.065	2.68E-06	0.107	5.62E-05	0.031	8.32E-06	0.082	6.93E-05	0.027
550	1804.462	1.47E-06	0.096	1.78E-06	0.102	3.63E-05	0.034	5.22E-06	0.083	4.47E-05	0.029
600	1968.504	9.46E-07	0.095	1.45E-06	0.100	2.46E-05	0.033	3.10E-06	0.095	3.01E-05	0.029
650	2132.546	5.66E-07	0.071	1.06E-06	0.100	1.57E-05	0.036	1.86E-06	0.097	1.91E-05	0.031
700	2296.588	4.62E-07	0.087	7.27E-07	0.095	1.04E-05	0.036	1.01E-06	0.095	1.26E-05	0.031
750	2460.63	2.65E-07	0.092	5.49E-07	0.104	6.69E-06	0.036	7.71E-07	0.097	8.28E-06	0.031
800	2624.672	1.99E-07	0.072	4.11E-07	0.105	4.41E-06	0.036	4.24E-07	0.084	5.45E-06	0.031
850	2788.714	1.33E-07	0.101	3.22E-07	0.109	3.15E-06	0.037	3.05E-07	0.100	3.91E-06	0.032
900	2952.756	7.58E-08	0.075	2.36E-07	0.118	2.17E-06	0.038	1.82E-07	0.091	2.67E-06	0.033
950	3116.798	5.59E-08	0.081	1.82E-07	0.127	1.46E-06	0.037	1.26E-07	0.096	1.82E-06	0.033
1000	3280.84	3.48E-08	0.097	1.45E-07	0.134	9.48E-07	0.040	9.25E-08	0.118	1.22E-06	0.036

2.9 w/o U235
32,500 MWD/MTU burnup - B&W 15x15 fuel element

num fuel 32
hours/yr 8760

Curies Co for BPRAs		331	290	254	223	196	171	150	132	132
Cooling Time		5.0 YR	6.0 YR	7.0 YR	8.0 YR	9.0 YR	10.0 YR	11.0 YR	12.0 YR	13.0 YR
Side Dose per cask										
meter	feet									
1	3.281	1.06E+05	7.83E+04	6.18E+04	5.13E+04	4.38E+04	3.82E+04	3.37E+04	3.00E+04	2.72E+04
3.048	10	5.17E+04	3.74E+04	2.92E+04	2.40E+04	2.05E+04	1.78E+04	1.57E+04	1.40E+04	1.27E+04
6.10	20.00	2.47E+04	1.78E+04	1.38E+04	1.13E+04	9.64E+03	8.37E+03	7.38E+03	6.57E+03	5.98E+03
10.00	32.81	1.23E+04	8.80E+03	6.83E+03	5.60E+03	4.75E+03	4.12E+03	3.63E+03	3.23E+03	2.94E+03
12.19	40.00	8.89E+03	6.37E+03	4.94E+03	4.05E+03	3.44E+03	2.98E+03	2.63E+03	2.34E+03	2.13E+03
18.29	60.00	4.38E+03	3.14E+03	2.43E+03	2.00E+03	1.70E+03	1.47E+03	1.30E+03	1.16E+03	1.05E+03
24.38	80.00	2.53E+03	1.81E+03	1.40E+03	1.15E+03	9.78E+02	8.48E+02	7.48E+02	6.66E+02	6.07E+02
30.48	100.00	1.63E+03	1.17E+03	9.06E+02	7.44E+02	6.32E+02	5.49E+02	4.84E+02	4.31E+02	3.92E+02
45.72	150.00	7.04E+02	5.06E+02	3.93E+02	3.23E+02	2.75E+02	2.38E+02	2.10E+02	1.87E+02	1.71E+02
50.00	164.04	5.82E+02	4.18E+02	3.25E+02	2.68E+02	2.28E+02	1.98E+02	1.75E+02	1.56E+02	1.42E+02
60.96	200.00	3.74E+02	2.69E+02	2.09E+02	1.72E+02	1.46E+02	1.27E+02	1.12E+02	1.00E+02	9.12E+01
91.44	300.00	1.48E+02	1.06E+02	8.27E+01	6.79E+01	5.78E+01	5.03E+01	4.44E+01	3.96E+01	3.61E+01
100.00	328.08	1.20E+02	8.60E+01	6.68E+01	5.49E+01	4.67E+01	4.06E+01	3.59E+01	3.20E+01	2.92E+01
121.92	400.00	7.30E+01	5.21E+01	4.03E+01	3.30E+01	2.80E+01	2.43E+01	2.14E+01	1.91E+01	1.74E+01
150.00	492.13	4.17E+01	2.97E+01	2.29E+01	1.88E+01	1.60E+01	1.39E+01	1.22E+01	1.09E+01	9.96E+00
200.00	656.17	1.86E+01	1.32E+01	1.02E+01	8.39E+00	7.13E+00	6.21E+00	5.49E+00	4.90E+00	4.48E+00
250.00	820.21	9.24E+00	6.47E+00	4.94E+00	4.02E+00	3.41E+00	2.96E+00	2.61E+00	2.33E+00	2.13E+00
300.00	984.25	5.08E+00	3.55E+00	2.70E+00	2.20E+00	1.86E+00	1.62E+00	1.43E+00	1.28E+00	1.17E+00
350.00	1148.29	2.79E+00	1.95E+00	1.49E+00	1.21E+00	1.03E+00	8.98E-01	7.97E-01	7.14E-01	6.54E-01
400.00	1312.34	1.62E+00	1.11E+00	8.40E-01	6.81E-01	5.77E-01	5.02E-01	4.45E-01	3.99E-01	3.65E-01
450.00	1476.38	9.69E-01	6.62E-01	4.98E-01	4.03E-01	3.41E-01	2.97E-01	2.64E-01	2.36E-01	2.17E-01
500.00	1640.42	6.03E-01	4.10E-01	3.08E-01	2.49E-01	2.11E-01	1.83E-01	1.63E-01	1.46E-01	1.34E-01
550.00	1804.46	3.90E-01	2.63E-01	1.97E-01	1.59E-01	1.34E-01	1.17E-01	1.04E-01	9.36E-02	8.60E-02
600.00	1968.50	2.62E-01	1.76E-01	1.31E-01	1.05E-01	8.89E-02	7.75E-02	6.90E-02	6.22E-02	5.72E-02
650.00	2132.55	1.67E-01	1.11E-01	8.26E-02	6.64E-02	5.62E-02	4.91E-02	4.38E-02	3.95E-02	3.64E-02
700.00	2296.59	1.10E-01	7.26E-02	5.37E-02	4.31E-02	3.66E-02	3.20E-02	2.86E-02	2.59E-02	2.39E-02
750.00	2460.63	7.22E-02	4.74E-02	3.49E-02	2.79E-02	2.37E-02	2.07E-02	1.86E-02	1.68E-02	1.55E-02
800.00	2624.67	4.75E-02	3.13E-02	2.31E-02	1.86E-02	1.58E-02	1.39E-02	1.25E-02	1.13E-02	1.05E-02
850.00	2788.71	3.41E-02	2.23E-02	1.63E-02	1.31E-02	1.11E-02	9.76E-03	8.77E-03	7.99E-03	7.41E-03
900.00	2952.76	2.33E-02	1.50E-02	1.08E-02	8.59E-03	7.27E-03	6.38E-03	5.73E-03	5.22E-03	4.85E-03
950.00	3116.80	1.59E-02	1.03E-02	7.46E-03	5.95E-03	5.06E-03	4.46E-03	4.02E-03	3.67E-03	3.41E-03
1000.00	3280.84	1.07E-02	6.89E-03	5.04E-03	4.04E-03	3.45E-03	3.06E-03	2.77E-03	2.54E-03	2.36E-03

2.9 w/o U235
32,500 MWD/MTU burnup - B&W 15x15 fuel element

num fuel 32
hours/yr 8760

Curies Co for BPRAs		331	290	254	223	196	171	150	132	132
Top Dose per casks										
meter	feet	5.0 YR	6.0 YR	7.0 YR	8.0 YR	9.0 YR	10.0 YR	11.0 YR	12.0 YR	13.0 YR
1	3.281	2.50E+01	2.37E+01	2.26E+01	2.16E+01	2.06E+01	1.97E+01	1.89E+01	1.81E+01	1.74E+01
3.048	10	2.61E+01	2.47E+01	2.35E+01	2.24E+01	2.13E+01	2.04E+01	1.95E+01	1.87E+01	1.79E+01
6.096	20	2.43E+01	2.30E+01	2.18E+01	2.08E+01	1.98E+01	1.89E+01	1.81E+01	1.73E+01	1.66E+01
10	32.808	1.97E+01	1.86E+01	1.76E+01	1.68E+01	1.60E+01	1.52E+01	1.46E+01	1.39E+01	1.34E+01
12.192	40	1.72E+01	1.63E+01	1.54E+01	1.47E+01	1.40E+01	1.33E+01	1.28E+01	1.22E+01	1.17E+01
18.288	60	1.24E+01	1.17E+01	1.11E+01	1.06E+01	1.01E+01	9.60E+00	9.17E+00	8.77E+00	8.41E+00
24.384	80	9.21E+00	8.67E+00	8.21E+00	7.81E+00	7.43E+00	7.08E+00	6.76E+00	6.46E+00	6.19E+00
30.48	100	7.28E+00	6.85E+00	6.48E+00	6.15E+00	5.85E+00	5.57E+00	5.31E+00	5.08E+00	4.86E+00
45.72	150	4.10E+00	3.85E+00	3.63E+00	3.44E+00	3.27E+00	3.11E+00	2.96E+00	2.83E+00	2.71E+00
50	164.042	3.63E+00	3.40E+00	3.21E+00	3.04E+00	2.88E+00	2.74E+00	2.61E+00	2.49E+00	2.38E+00
60.96	200	2.62E+00	2.45E+00	2.31E+00	2.18E+00	2.07E+00	1.97E+00	1.87E+00	1.78E+00	1.71E+00
91.44	300	1.23E+00	1.14E+00	1.07E+00	1.01E+00	9.57E-01	9.07E-01	8.62E-01	8.20E-01	7.83E-01
100	328.084	1.02E+00	9.48E-01	8.89E-01	8.37E-01	7.90E-01	7.48E-01	7.10E-01	6.75E-01	6.44E-01
121.92	400	6.75E-01	6.28E-01	5.88E-01	5.54E-01	5.23E-01	4.95E-01	4.69E-01	4.46E-01	4.25E-01
150	492.126	3.99E-01	3.70E-01	3.45E-01	3.24E-01	3.05E-01	2.88E-01	2.73E-01	2.59E-01	2.47E-01
200	656.168	1.77E-01	1.63E-01	1.52E-01	1.43E-01	1.34E-01	1.26E-01	1.19E-01	1.13E-01	1.07E-01
250	820.21	8.43E-02	7.76E-02	7.21E-02	6.75E-02	6.33E-02	5.96E-02	5.62E-02	5.32E-02	5.05E-02
300	984.252	4.28E-02	3.93E-02	3.64E-02	3.40E-02	3.18E-02	2.99E-02	2.82E-02	2.66E-02	2.53E-02
350	1148.294	2.29E-02	2.10E-02	1.94E-02	1.81E-02	1.69E-02	1.59E-02	1.50E-02	1.41E-02	1.34E-02
400	1312.336	1.27E-02	1.17E-02	1.08E-02	1.01E-02	9.44E-03	8.87E-03	8.35E-03	7.88E-03	7.49E-03
450	1476.378	7.08E-03	6.49E-03	6.01E-03	5.61E-03	5.25E-03	4.93E-03	4.64E-03	4.38E-03	4.16E-03
500	1640.42	4.04E-03	3.71E-03	3.44E-03	3.22E-03	3.01E-03	2.83E-03	2.67E-03	2.52E-03	2.40E-03
550	1804.462	2.31E-03	2.12E-03	1.96E-03	1.83E-03	1.72E-03	1.61E-03	1.52E-03	1.44E-03	1.37E-03
600	1968.504	1.38E-03	1.27E-03	1.18E-03	1.10E-03	1.03E-03	9.68E-04	9.12E-04	8.62E-04	8.19E-04
650	2132.546	8.83E-04	8.14E-04	7.58E-04	7.11E-04	6.68E-04	6.30E-04	5.96E-04	5.64E-04	5.37E-04
700	2296.588	5.22E-04	4.81E-04	4.49E-04	4.21E-04	3.96E-04	3.73E-04	3.53E-04	3.34E-04	3.18E-04
750	2460.63	3.25E-04	3.01E-04	2.81E-04	2.65E-04	2.49E-04	2.36E-04	2.23E-04	2.12E-04	2.02E-04
800	2624.672	2.17E-04	2.02E-04	1.89E-04	1.78E-04	1.69E-04	1.60E-04	1.52E-04	1.44E-04	1.38E-04
850	2788.714	1.41E-04	1.32E-04	1.24E-04	1.17E-04	1.10E-04	1.05E-04	9.96E-05	9.48E-05	9.06E-05
900	2952.756	9.33E-05	8.70E-05	8.19E-05	7.75E-05	7.35E-05	6.98E-05	6.65E-05	6.34E-05	6.06E-05
950	3116.798	6.26E-05	5.86E-05	5.54E-05	5.25E-05	4.99E-05	4.75E-05	4.53E-05	4.32E-05	4.14E-05
1000	3280.84	4.58E-05	4.32E-05	4.10E-05	3.90E-05	3.72E-05	3.55E-05	3.40E-05	3.25E-05	3.12E-05

num fuel	32
hours/yr	8760

Curies Co for BPRAs		132	132	132	132	132	132	132
Cooling Time		14.0 YR	15.0 YR	16.0 YR	17.0 YR	18.0 YR	19.0 YR	20.0 YR
Side Dose per cask								
meter	feet							
1	3.281	2.47E+04	2.26E+04	2.08E+04	1.92E+04	1.78E+04	1.65E+04	1.54E+04
3.048	10	1.16E+04	1.07E+04	9.88E+03	9.16E+03	8.51E+03	7.95E+03	7.43E+03
6.10	20.00	5.48E+03	5.04E+03	4.66E+03	4.33E+03	4.03E+03	3.77E+03	3.53E+03
10.00	32.81	2.70E+03	2.48E+03	2.30E+03	2.14E+03	1.99E+03	1.86E+03	1.74E+03
12.19	40.00	1.95E+03	1.80E+03	1.66E+03	1.55E+03	1.44E+03	1.35E+03	1.26E+03
18.29	60.00	9.64E+02	8.89E+02	8.23E+02	7.65E+02	7.13E+02	6.68E+02	6.26E+02
24.38	80.00	5.56E+02	5.13E+02	4.75E+02	4.41E+02	4.11E+02	3.85E+02	3.61E+02
30.48	100.00	3.60E+02	3.31E+02	3.07E+02	2.85E+02	2.66E+02	2.49E+02	2.33E+02
45.72	150.00	1.57E+02	1.44E+02	1.34E+02	1.24E+02	1.16E+02	1.09E+02	1.02E+02
50.00	164.04	1.30E+02	1.20E+02	1.11E+02	1.03E+02	9.65E+01	9.04E+01	8.47E+01
60.96	200.00	8.37E+01	7.72E+01	7.16E+01	6.66E+01	6.22E+01	5.82E+01	5.46E+01
91.44	300.00	3.32E+01	3.06E+01	2.84E+01	2.64E+01	2.47E+01	2.31E+01	2.17E+01
100.00	328.08	2.68E+01	2.47E+01	2.29E+01	2.14E+01	1.99E+01	1.87E+01	1.75E+01
121.92	400.00	1.60E+01	1.47E+01	1.36E+01	1.27E+01	1.18E+01	1.11E+01	1.04E+01
150.00	492.13	9.15E+00	8.44E+00	7.83E+00	7.29E+00	6.81E+00	6.38E+00	5.99E+00
200.00	656.17	4.11E+00	3.80E+00	3.53E+00	3.29E+00	3.07E+00	2.88E+00	2.70E+00
250.00	820.21	1.96E+00	1.81E+00	1.68E+00	1.57E+00	1.46E+00	1.37E+00	1.29E+00
300.00	984.25	1.08E+00	1.00E+00	9.30E-01	8.68E-01	8.12E-01	7.63E-01	7.17E-01
350.00	1148.29	6.03E-01	5.59E-01	5.20E-01	4.86E-01	4.55E-01	4.27E-01	4.02E-01
400.00	1312.34	3.37E-01	3.12E-01	2.90E-01	2.71E-01	2.53E-01	2.38E-01	2.24E-01
450.00	1476.38	2.00E-01	1.85E-01	1.72E-01	1.61E-01	1.51E-01	1.42E-01	1.33E-01
500.00	1640.42	1.24E-01	1.15E-01	1.07E-01	9.96E-02	9.33E-02	8.77E-02	8.25E-02
550.00	1804.46	7.94E-02	7.36E-02	6.86E-02	6.42E-02	6.01E-02	5.65E-02	5.32E-02
600.00	1968.50	5.29E-02	4.91E-02	4.58E-02	4.29E-02	4.03E-02	3.79E-02	3.57E-02
650.00	2132.55	3.37E-02	3.13E-02	2.93E-02	2.75E-02	2.58E-02	2.43E-02	2.29E-02
700.00	2296.59	2.23E-02	2.08E-02	1.95E-02	1.83E-02	1.72E-02	1.63E-02	1.54E-02
750.00	2460.63	1.44E-02	1.35E-02	1.26E-02	1.19E-02	1.12E-02	1.06E-02	9.97E-03
800.00	2624.67	9.79E-03	9.16E-03	8.60E-03	8.10E-03	7.64E-03	7.23E-03	6.84E-03
850.00	2788.71	6.91E-03	6.47E-03	6.08E-03	5.73E-03	5.41E-03	5.12E-03	4.85E-03
900.00	2952.76	4.53E-03	4.24E-03	3.99E-03	3.76E-03	3.55E-03	3.36E-03	3.19E-03
950.00	3116.80	3.19E-03	3.00E-03	2.82E-03	2.67E-03	2.52E-03	2.39E-03	2.27E-03
1000.00	3280.84	2.22E-03	2.08E-03	1.96E-03	1.86E-03	1.76E-03	1.67E-03	1.59E-03

num fuel	32
hours/yr	8760

Curies Co for BPRAs		132	132	132	132	132	132	132
Top Dose per casks								
meter	feet	14.0 YR	15.0 YR	16.0 YR	17.0 YR	18.0 YR	19.0 YR	20.0 YR
1	3.281	1.67E+01	1.61E+01	1.54E+01	1.48E+01	1.43E+01	1.38E+01	1.32E+01
3.048	10	1.72E+01	1.65E+01	1.59E+01	1.53E+01	1.47E+01	1.42E+01	1.36E+01
6.096	20	1.59E+01	1.53E+01	1.47E+01	1.41E+01	1.36E+01	1.31E+01	1.26E+01
10	32.808	1.28E+01	1.23E+01	1.18E+01	1.14E+01	1.10E+01	1.05E+01	1.01E+01
12.192	40	1.12E+01	1.08E+01	1.04E+01	9.95E+00	9.58E+00	9.21E+00	8.86E+00
18.288	60	8.07E+00	7.75E+00	7.44E+00	7.15E+00	6.88E+00	6.61E+00	6.36E+00
24.384	80	5.94E+00	5.70E+00	5.48E+00	5.26E+00	5.06E+00	4.87E+00	4.68E+00
30.48	100	4.67E+00	4.48E+00	4.30E+00	4.13E+00	3.97E+00	3.82E+00	3.67E+00
45.72	150	2.59E+00	2.49E+00	2.39E+00	2.29E+00	2.20E+00	2.12E+00	2.04E+00
50	164.042	2.28E+00	2.19E+00	2.10E+00	2.01E+00	1.93E+00	1.86E+00	1.79E+00
60.96	200	1.63E+00	1.57E+00	1.50E+00	1.44E+00	1.38E+00	1.33E+00	1.28E+00
91.44	300	7.49E-01	7.17E-01	6.87E-01	6.58E-01	6.32E-01	6.07E-01	5.83E-01
100	328.084	6.16E-01	5.89E-01	5.64E-01	5.41E-01	5.19E-01	4.98E-01	4.78E-01
121.92	400	4.07E-01	3.89E-01	3.72E-01	3.57E-01	3.42E-01	3.28E-01	3.15E-01
150	492.126	2.35E-01	2.25E-01	2.15E-01	2.06E-01	1.97E-01	1.89E-01	1.82E-01
200	656.168	1.02E-01	9.78E-02	9.34E-02	8.94E-02	8.56E-02	8.21E-02	7.87E-02
250	820.21	4.82E-02	4.59E-02	4.38E-02	4.19E-02	4.01E-02	3.85E-02	3.69E-02
300	984.252	2.41E-02	2.29E-02	2.19E-02	2.09E-02	2.00E-02	1.91E-02	1.83E-02
350	1148.294	1.28E-02	1.22E-02	1.16E-02	1.11E-02	1.06E-02	1.01E-02	9.71E-03
400	1312.336	7.12E-03	6.79E-03	6.47E-03	6.18E-03	5.91E-03	5.66E-03	5.42E-03
450	1476.378	3.96E-03	3.77E-03	3.60E-03	3.44E-03	3.29E-03	3.15E-03	3.01E-03
500	1640.42	2.28E-03	2.18E-03	2.08E-03	1.98E-03	1.90E-03	1.82E-03	1.74E-03
550	1804.462	1.30E-03	1.24E-03	1.18E-03	1.13E-03	1.08E-03	1.04E-03	9.92E-04
600	1968.504	7.79E-04	7.43E-04	7.09E-04	6.77E-04	6.48E-04	6.20E-04	5.94E-04
650	2132.546	5.12E-04	4.89E-04	4.67E-04	4.47E-04	4.28E-04	4.11E-04	3.94E-04
700	2296.588	3.04E-04	2.90E-04	2.77E-04	2.65E-04	2.54E-04	2.44E-04	2.34E-04
750	2460.63	1.93E-04	1.85E-04	1.77E-04	1.69E-04	1.62E-04	1.56E-04	1.49E-04
800	2624.672	1.32E-04	1.26E-04	1.21E-04	1.16E-04	1.11E-04	1.07E-04	1.02E-04
850	2788.714	8.67E-05	8.30E-05	7.95E-05	7.62E-05	7.32E-05	7.03E-05	6.75E-05
900	2952.756	5.81E-05	5.56E-05	5.33E-05	5.12E-05	4.91E-05	4.72E-05	4.54E-05
950	3116.798	3.97E-05	3.81E-05	3.65E-05	3.51E-05	3.37E-05	3.24E-05	3.11E-05
1000	3280.84	3.00E-05	2.88E-05	2.76E-05	2.66E-05	2.56E-05	2.46E-05	2.37E-05

MPC		mpc-24	mpc-24	mpc-24	mpc-24	mpc-24	mpc-32	mpc-32	mpc-32
GWD/MTU		41.5	45	50	52.5	55	32.5	37.5	45
years		5	6	8	10	12	5	7	8
curies Co-60 BPRAs		331	331	331	331	331	331	331	331
meter	feet								
Side dose - mrem/8760 hours									
1	3.281	9.86E+04	7.78E+04	6.20E+04	5.22E+04	4.63E+04	1.06E+05	7.25E+04	7.14E+04
3.048	10	4.80E+04	3.76E+04	2.97E+04	2.50E+04	2.22E+04	5.17E+04	3.45E+04	3.41E+04
6.096	20	2.29E+04	1.79E+04	1.40E+04	1.18E+04	1.05E+04	2.47E+04	1.63E+04	1.61E+04
10	32.808	1.14E+04	8.83E+03	6.89E+03	5.77E+03	5.12E+03	1.23E+04	8.08E+03	7.96E+03
12.192	40	8.23E+03	6.39E+03	4.98E+03	4.17E+03	3.70E+03	8.89E+03	5.85E+03	5.76E+03
18.288	60	4.05E+03	3.15E+03	2.46E+03	2.06E+03	1.83E+03	4.38E+03	2.88E+03	2.84E+03
24.384	80	2.34E+03	1.82E+03	1.42E+03	1.19E+03	1.06E+03	2.53E+03	1.66E+03	1.64E+03
30.48	100	1.51E+03	1.17E+03	9.18E+02	7.71E+02	6.87E+02	1.63E+03	1.07E+03	1.06E+03
45.72	150	6.52E+02	5.08E+02	3.98E+02	3.34E+02	2.98E+02	7.04E+02	4.65E+02	4.59E+02
50	164.042	5.39E+02	4.21E+02	3.31E+02	2.79E+02	2.49E+02	5.82E+02	3.86E+02	3.81E+02
60.96	200	3.47E+02	2.71E+02	2.13E+02	1.80E+02	1.61E+02	3.74E+02	2.48E+02	2.45E+02
91.44	300	1.38E+02	1.07E+02	8.45E+01	7.15E+01	6.42E+01	1.48E+02	9.81E+01	9.71E+01
100	328.084	1.11E+02	8.66E+01	6.83E+01	5.77E+01	5.18E+01	1.20E+02	7.93E+01	7.85E+01
121.92	400	6.76E+01	5.23E+01	4.10E+01	3.45E+01	3.09E+01	7.30E+01	4.77E+01	4.71E+01
150	492.126	3.87E+01	2.99E+01	2.35E+01	1.98E+01	1.78E+01	4.17E+01	2.72E+01	2.69E+01
200	656.168	1.72E+01	1.33E+01	1.05E+01	8.95E+00	8.07E+00	1.86E+01	1.22E+01	1.21E+01
250	820.21	8.55E+00	6.53E+00	5.09E+00	4.32E+00	3.90E+00	9.24E+00	5.88E+00	5.81E+00
300	984.252	4.70E+00	3.58E+00	2.79E+00	2.37E+00	2.15E+00	5.08E+00	3.22E+00	3.18E+00
350	1148.294	2.59E+00	1.97E+00	1.56E+00	1.35E+00	1.24E+00	2.79E+00	1.78E+00	1.77E+00
400	1312.336	1.50E+00	1.12E+00	8.82E-01	7.60E-01	7.00E-01	1.62E+00	1.00E+00	9.94E-01
450	1476.378	8.97E-01	6.70E-01	5.27E-01	4.58E-01	4.25E-01	9.69E-01	5.96E-01	5.91E-01
500	1640.42	5.59E-01	4.16E-01	3.28E-01	2.86E-01	2.67E-01	6.03E-01	3.69E-01	3.66E-01
550	1804.462	3.61E-01	2.67E-01	2.11E-01	1.86E-01	1.74E-01	3.90E-01	2.36E-01	2.34E-01
600	1968.504	2.44E-01	1.79E-01	1.43E-01	1.26E-01	1.19E-01	2.62E-01	1.57E-01	1.57E-01
650	2132.546	1.55E-01	1.14E-01	9.14E-02	8.14E-02	7.76E-02	1.67E-01	9.97E-02	9.99E-02
700	2296.588	1.03E-01	7.53E-02	6.09E-02	5.49E-02	5.29E-02	1.10E-01	6.53E-02	6.59E-02
750	2460.63	6.76E-02	4.90E-02	3.96E-02	3.58E-02	3.47E-02	7.22E-02	4.23E-02	4.26E-02
800	2624.672	4.49E-02	3.28E-02	2.71E-02	2.49E-02	2.44E-02	4.75E-02	2.83E-02	2.88E-02
850	2788.714	3.23E-02	2.34E-02	1.93E-02	1.78E-02	1.75E-02	3.41E-02	2.00E-02	2.04E-02
900	2952.756	2.19E-02	1.57E-02	1.28E-02	1.18E-02	1.17E-02	2.33E-02	1.33E-02	1.35E-02
950	3116.798	1.51E-02	1.09E-02	9.09E-03	8.49E-03	8.46E-03	1.59E-02	9.21E-03	9.47E-03
1000	3280.84	1.02E-02	7.39E-03	6.33E-03	6.00E-03	6.05E-03	1.07E-02	6.26E-03	6.52E-03

MPC		mpc-24	mpc-24	mpc-24	mpc-24	mpc-24	mpc-32	mpc-32	mpc-32
GWD/MTU		41.5	45	50	52.5	55	32.5	37.5	45
years		5	6	8	10	12	5	7	8
curies Co-60 BPRAs		331	331	331	331	331	331	331	331
meter	feet								
Top dose - mrem/8760 hours									
meter	feet								
1	3.281	3.60E+01	3.63E+01	4.99E+01	5.54E+01	6.09E+01	2.50E+01	3.31E+01	4.44E+01
3.048	10	3.73E+01	3.75E+01	5.13E+01	5.69E+01	6.25E+01	2.61E+01	3.43E+01	4.58E+01
6.096	20	3.46E+01	3.47E+01	4.75E+01	5.25E+01	5.77E+01	2.43E+01	3.18E+01	4.24E+01
10	32.808	2.79E+01	2.80E+01	3.82E+01	4.22E+01	4.64E+01	1.97E+01	2.56E+01	3.41E+01
12.192	40	2.44E+01	2.45E+01	3.34E+01	3.69E+01	4.05E+01	1.72E+01	2.24E+01	2.98E+01
18.288	60	1.76E+01	1.76E+01	2.40E+01	2.65E+01	2.91E+01	1.24E+01	1.61E+01	2.14E+01
24.384	80	1.29E+01	1.30E+01	1.76E+01	1.95E+01	2.13E+01	9.21E+00	1.19E+01	1.58E+01
30.48	100	1.02E+01	1.02E+01	1.38E+01	1.52E+01	1.67E+01	7.28E+00	9.36E+00	1.24E+01
45.72	150	5.69E+00	5.68E+00	7.66E+00	8.43E+00	9.22E+00	4.10E+00	5.23E+00	6.89E+00
50	164.042	5.01E+00	5.00E+00	6.72E+00	7.39E+00	8.08E+00	3.63E+00	4.61E+00	6.06E+00
60.96	200	3.59E+00	3.58E+00	4.81E+00	5.28E+00	5.77E+00	2.62E+00	3.31E+00	4.34E+00
91.44	300	1.66E+00	1.65E+00	2.19E+00	2.40E+00	2.61E+00	1.23E+00	1.53E+00	1.99E+00
100	328.084	1.37E+00	1.36E+00	1.80E+00	1.96E+00	2.14E+00	1.02E+00	1.26E+00	1.63E+00
121.92	400	9.04E-01	8.95E-01	1.18E+00	1.29E+00	1.41E+00	6.75E-01	8.33E-01	1.08E+00
150	492.126	5.27E-01	5.20E-01	6.82E-01	7.41E-01	8.05E-01	3.99E-01	4.86E-01	6.24E-01
200	656.168	2.31E-01	2.27E-01	2.95E-01	3.20E-01	3.46E-01	1.77E-01	2.13E-01	2.72E-01
250	820.21	1.09E-01	1.07E-01	1.38E-01	1.50E-01	1.62E-01	8.43E-02	1.00E-01	1.28E-01
300	984.252	5.46E-02	5.35E-02	6.87E-02	7.41E-02	8.00E-02	4.28E-02	5.04E-02	6.37E-02
350	1148.294	2.91E-02	2.84E-02	3.64E-02	3.92E-02	4.22E-02	2.29E-02	2.68E-02	3.38E-02
400	1312.336	1.62E-02	1.58E-02	2.03E-02	2.19E-02	2.36E-02	1.27E-02	1.49E-02	1.89E-02
450	1476.378	9.00E-03	8.81E-03	1.13E-02	1.22E-02	1.31E-02	7.08E-03	8.31E-03	1.05E-02
500	1640.42	5.17E-03	5.07E-03	6.53E-03	7.05E-03	7.62E-03	4.04E-03	4.77E-03	6.04E-03
550	1804.462	2.95E-03	2.89E-03	3.72E-03	4.02E-03	4.34E-03	2.31E-03	2.72E-03	3.45E-03
600	1968.504	1.77E-03	1.73E-03	2.23E-03	2.41E-03	2.60E-03	1.38E-03	1.63E-03	2.06E-03
650	2132.546	1.15E-03	1.13E-03	1.48E-03	1.61E-03	1.74E-03	8.83E-04	1.06E-03	1.36E-03
700	2296.588	6.82E-04	6.71E-04	8.77E-04	9.53E-04	1.03E-03	5.22E-04	6.28E-04	8.05E-04
750	2460.63	4.31E-04	4.26E-04	5.61E-04	6.12E-04	6.66E-04	3.25E-04	3.97E-04	5.12E-04
800	2624.672	2.92E-04	2.89E-04	3.84E-04	4.21E-04	4.59E-04	2.17E-04	2.69E-04	3.49E-04
850	2788.714	1.91E-04	1.90E-04	2.54E-04	2.78E-04	3.04E-04	1.41E-04	1.76E-04	2.30E-04
900	2952.756	1.28E-04	1.27E-04	1.71E-04	1.88E-04	2.05E-04	9.33E-05	1.17E-04	1.54E-04
950	3116.798	8.69E-05	8.67E-05	1.17E-04	1.29E-04	1.42E-04	6.26E-05	7.98E-05	1.05E-04
1000	3280.84	6.50E-05	6.52E-05	8.93E-05	9.89E-05	1.09E-04	4.58E-05	5.97E-05	7.97E-05

MPC		mpc-24	mpc-24	mpc-24	mpc-24	mpc-24	mpc-32	mpc-32	mpc-32
GWD/MTU		41.5	45	50	52.5	55	32.5	37.5	45
years		5	6	8	10	12	5	7	8
curies Co-60 BPRAs		331	331	331	331	331	331	331	331
meter	feet								
Total dose - mrem/8760 hours									
meter	feet								
1	3.281	9.87E+04	7.78E+04	6.21E+04	5.22E+04	4.63E+04	1.07E+05	7.25E+04	7.14E+04
3.048	10	4.81E+04	3.76E+04	2.97E+04	2.50E+04	2.23E+04	5.17E+04	3.45E+04	3.41E+04
6.096	20	2.30E+04	1.79E+04	1.41E+04	1.18E+04	1.05E+04	2.48E+04	1.64E+04	1.62E+04
10	32.808	1.14E+04	8.86E+03	6.93E+03	5.81E+03	5.17E+03	1.23E+04	8.11E+03	7.99E+03
12.192	40	8.25E+03	6.42E+03	5.02E+03	4.21E+03	3.74E+03	8.91E+03	5.87E+03	5.79E+03
18.288	60	4.07E+03	3.17E+03	2.49E+03	2.09E+03	1.86E+03	4.39E+03	2.90E+03	2.86E+03
24.384	80	2.35E+03	1.83E+03	1.44E+03	1.21E+03	1.09E+03	2.54E+03	1.67E+03	1.66E+03
30.48	100	1.52E+03	1.18E+03	9.32E+02	7.86E+02	7.04E+02	1.63E+03	1.08E+03	1.07E+03
45.72	150	6.58E+02	5.13E+02	4.05E+02	3.43E+02	3.07E+02	7.08E+02	4.71E+02	4.66E+02
50	164.042	5.44E+02	4.26E+02	3.38E+02	2.86E+02	2.57E+02	5.85E+02	3.90E+02	3.87E+02
60.96	200	3.51E+02	2.74E+02	2.18E+02	1.85E+02	1.67E+02	3.77E+02	2.51E+02	2.50E+02
91.44	300	1.39E+02	1.09E+02	8.67E+01	7.39E+01	6.68E+01	1.50E+02	9.96E+01	9.90E+01
100	328.084	1.13E+02	8.79E+01	7.01E+01	5.97E+01	5.39E+01	1.21E+02	8.06E+01	8.01E+01
121.92	400	6.85E+01	5.32E+01	4.21E+01	3.58E+01	3.23E+01	7.37E+01	4.86E+01	4.82E+01
150	492.126	3.92E+01	3.04E+01	2.41E+01	2.06E+01	1.86E+01	4.21E+01	2.77E+01	2.75E+01
200	656.168	1.75E+01	1.36E+01	1.08E+01	9.27E+00	8.42E+00	1.88E+01	1.24E+01	1.23E+01
250	820.21	8.66E+00	6.63E+00	5.23E+00	4.47E+00	4.07E+00	9.32E+00	5.98E+00	5.94E+00
300	984.252	4.76E+00	3.63E+00	2.86E+00	2.45E+00	2.23E+00	5.13E+00	3.27E+00	3.25E+00
350	1148.294	2.62E+00	2.00E+00	1.60E+00	1.38E+00	1.28E+00	2.82E+00	1.80E+00	1.80E+00
400	1312.336	1.51E+00	1.14E+00	9.02E-01	7.82E-01	7.23E-01	1.63E+00	1.02E+00	1.01E+00
450	1476.378	9.06E-01	6.78E-01	5.39E-01	4.70E-01	4.38E-01	9.76E-01	6.04E-01	6.01E-01
500	1640.42	5.64E-01	4.21E-01	3.35E-01	2.93E-01	2.75E-01	6.07E-01	3.74E-01	3.72E-01
550	1804.462	3.64E-01	2.70E-01	2.15E-01	1.90E-01	1.78E-01	3.92E-01	2.39E-01	2.38E-01
600	1968.504	2.46E-01	1.81E-01	1.45E-01	1.29E-01	1.22E-01	2.64E-01	1.59E-01	1.59E-01
650	2132.546	1.57E-01	1.15E-01	9.28E-02	8.30E-02	7.93E-02	1.68E-01	1.01E-01	1.01E-01
700	2296.588	1.03E-01	7.60E-02	6.18E-02	5.58E-02	5.39E-02	1.10E-01	6.59E-02	6.67E-02
750	2460.63	6.80E-02	4.94E-02	4.02E-02	3.64E-02	3.54E-02	7.25E-02	4.27E-02	4.31E-02
800	2624.672	4.52E-02	3.31E-02	2.75E-02	2.53E-02	2.48E-02	4.77E-02	2.85E-02	2.92E-02
850	2788.714	3.24E-02	2.36E-02	1.95E-02	1.81E-02	1.78E-02	3.43E-02	2.02E-02	2.06E-02
900	2952.756	2.21E-02	1.58E-02	1.30E-02	1.20E-02	1.19E-02	2.34E-02	1.34E-02	1.37E-02
950	3116.798	1.52E-02	1.10E-02	9.21E-03	8.62E-03	8.60E-03	1.59E-02	9.29E-03	9.58E-03
1000	3280.84	1.03E-02	7.45E-03	6.42E-03	6.10E-03	6.16E-03	1.07E-02	6.32E-03	6.60E-03

Appendix F: Results of Various Overpack Configuration Analyses

PROPRIETARY

Appendix G: Final ISFSI Dose Rate Calculations

PROPRIETARY

Appendix H: Annual Personnel Doses from ISFSI Operations

PROPRIETARY

Appendix I: Dose Rates from a HI-STORM 100S Without a Lid

The pages in this appendix are the output from the EXCEL file used to analyze the data from the calculations of the dose rate as a function of distance from a HI-STORM 100S overpack without a lid. The basic format of these pages is described in Appendix D. The contribution from BPRAs is included in the photon and cobalt dose components and not listed separately.

The dose rate is shown in mrem/hr since the duration for which the HI-STORM overpack will be lidless is relatively small.

As discussed in Section 7.6, the dose rate calculated is only for radiation leaving the top surface of the overpack without a lid. Reference [7] indicates that the distance from the CTF to the controlled area boundary is 1625 feet or 495.3 meters. Conservatively, the dose rate for 450 meters is used as the dose rate at the controlled area boundary.

32,500 MWD/MTU burnup - B&W 15x15 fuel element
2.9 w/o U235
5.0 YR 5.0 YR 5.0 YR 5.0 YR
hours/yr 1

BPRA curies 331
Num of Assemblies 32

Top Dose mrem/year **Single Cask**

dis	h4n5e06m neutron value	rel err	h4n5e06m phot (n,p) value	rel err	h4r5e09m h4p5e10m h4c5e06m h4q5e09m phot value	rel err	cobalt value	rel err	total value	rel err
10 ft	2.69E-01	0.015	4.48E-03	0.032	7.61E+00	0.033	1.02E+01	0.009	1.80E+01	0.015
20 ft	9.30E-02	0.020	1.36E-03	0.049	3.00E+00	0.038	2.87E+00	0.009	5.96E+00	0.019
40 ft	3.66E-02	0.020	5.46E-04	0.058	1.33E+00	0.039	1.08E+00	0.010	2.45E+00	0.022
60 ft	2.22E-02	0.024	3.55E-04	0.056	8.46E-01	0.040	6.57E-01	0.010	1.53E+00	0.023
80 ft	1.59E-02	0.020	2.66E-04	0.041	6.09E-01	0.041	4.67E-01	0.010	1.09E+00	0.023
100 ft	1.18E-02	0.019	1.95E-04	0.036	4.59E-01	0.039	3.52E-01	0.010	8.24E-01	0.022
200 ft	4.20E-03	0.018	7.87E-05	0.034	1.80E-01	0.042	1.38E-01	0.009	3.22E-01	0.024
300 ft	2.09E-03	0.017	4.71E-05	0.025	9.14E-02	0.040	7.11E-02	0.009	1.65E-01	0.023
400 ft	1.12E-03	0.017	2.87E-05	0.026	5.16E-02	0.039	4.06E-02	0.009	9.34E-02	0.022
500 ft	6.38E-04	0.017	1.94E-05	0.032	3.06E-02	0.039	2.46E-02	0.009	5.59E-02	0.022
600 ft	3.99E-04	0.016	1.22E-05	0.020	1.87E-02	0.036	1.55E-02	0.009	3.46E-02	0.020
200 m	3.12E-04	0.017	9.82E-06	0.021	1.44E-02	0.039	1.20E-02	0.009	2.68E-02	0.022
250 m	1.53E-04	0.018	5.64E-06	0.026	6.89E-03	0.039	5.91E-03	0.009	1.30E-02	0.021
300 m	7.89E-05	0.018	3.61E-06	0.028	3.32E-03	0.035	3.02E-03	0.009	6.42E-03	0.018
350 m	4.19E-05	0.020	2.10E-06	0.025	1.67E-03	0.038	1.58E-03	0.009	3.29E-03	0.020
400 m	2.30E-05	0.019	1.33E-06	0.026	8.44E-04	0.035	8.36E-04	0.009	1.70E-03	0.018
450 m	1.29E-05	0.022	8.37E-07	0.029	4.30E-04	0.033	4.55E-04	0.009	8.99E-04	0.017
500 m	7.92E-06	0.026	5.67E-07	0.036	2.25E-04	0.034	2.49E-04	0.009	4.82E-04	0.017
550 m	4.41E-06	0.025	3.71E-07	0.033	1.18E-04	0.030	1.39E-04	0.010	2.61E-04	0.014
600 m	2.57E-06	0.028	2.68E-07	0.033	6.25E-05	0.029	7.81E-05	0.010	1.43E-04	0.014
650 m	1.58E-06	0.031	1.95E-07	0.060	3.31E-05	0.030	4.40E-05	0.010	7.89E-05	0.014
700 m	9.52E-07	0.030	1.33E-07	0.037	1.79E-05	0.030	2.54E-05	0.010	4.44E-05	0.014
750 m	5.63E-07	0.034	9.98E-08	0.053	9.74E-06	0.029	1.47E-05	0.011	2.51E-05	0.013
800 m	3.48E-07	0.033	7.20E-08	0.054	5.28E-06	0.027	8.44E-06	0.011	1.41E-05	0.012
850 m	2.33E-07	0.041	5.43E-08	0.054	2.94E-06	0.026	4.95E-06	0.011	8.18E-06	0.012
900 m	1.34E-07	0.038	3.70E-08	0.053	1.60E-06	0.026	2.98E-06	0.011	4.76E-06	0.011
950 m	8.41E-08	0.043	3.08E-08	0.082	8.87E-07	0.028	1.77E-06	0.012	2.77E-06	0.012
1000 m	4.70E-08	0.049	1.91E-08	0.037	4.77E-07	0.028	9.68E-07	0.012	1.51E-06	0.012

Appendix J: Dose Rates from the 125-ton HI-TRAC Transfer Cask

The pages in this appendix are the output from the EXCEL file used to analyze the data from the calculations of the dose rate from the 125-ton HI-TRAC transfer cask. The basic format of these pages is described in Appendix D. The contribution from BPRAs is included in the photon and cobalt dose components and not listed separately. The burnup and cooling time analyzed is 55,000 MWD/MTU and 12 year cooling in the MPC-24. This was determined in Appendix B to be the bounding MPC and burnup and cooling time.

The dose rate for all calculations are listed in mrem/hr.

Pages J-3 and J-4 describe the segmentation that was used in MCNP for the axial tallies at different radial locations from the surface of the overpack.

Pages J-5 through J-10 present the results of the HI-TRAC calculations for the condition with water in the water jacket but not in the MPC and with the lid on the HI-TRAC. Page J-11 shows the average dose rate calculated over the axial height of the overpack for surfaces 825, 826, 827, 828, and 829.

Pages J-12 through J-14 present the results of the HI-TRAC calculations for the condition with water in the water jacket but not in the MPC and without a lid on the HI-TRAC. Since this change in the model only affects the upper portion of the cask a limited amount of output is provided.

Pages J-15 through J-17 present the results of the HI-TRAC calculations for the condition with water in the water jacket but not in the MPC, without a lid on the HI-TRAC, and with temporary water shielding above the water jacket. Since this change in the model only affects the upper portion of the cask, a limited amount of output is provided.

Pages J-18 and J-23 present the results for the accident condition of the HI-TRAC transfer cask. In this configuration it is assumed that there is no water in the water jacket and no water in the MPC and the HI-TRAC lid is installed. Pages J-24 through J-26 show the results for the accident configuration including a lead slump of 0.8 inches. The lead was reduced in height below the top forging and below the lifting trunnions. Since the lead slump only affects the upper portion of the cask a limited amount of output is provided.

Page J-27 describes the dose locations on the top and bottom surface of the HI-TRAC.
Page J-28 presents the results for the calculation of the dose rate on the top and bottom of the HI-TRAC. The top lid is in place and the pool lid is in place. Page J-29 presents the results of calculations that modeled 2.5 inches of Holtite-A on the bottom of the pool lid. This assumed thickness represents a portion of the additional shielding that will be provided by the bottom lid for the HI-TRAC during its movement operations. The dose rate are also reported for the top of the HI-TRAC but these are statistically the same as those values reported on Page J-28 since the geometry of the HI-TRAC was not changed in the top portion.

THIS PAGE INTENTIONALLY LEFT BLANK

surface	location
817	circumferential average around lower water jacket area on contact
832	circumferential average between top of water jacket and upper forging on contact
813	circumferential average around upper forging area
830	area on lifting trunnion in water jacket cutout area - on contact - 4.125 inches tall
831	area not on lifting trunnion in water jacket cutout area - on contact - 4.125 inches tall
(830 831)	average dose over water jacket cutout area - on contact - 4.125 inches tall
1825	area on lifting trunnion in water jacket cutout area - outer edge water jacket - 4.125 inches tall
2825	area not on lifting trunnion in water jacket cutout area - outer edge water jacket - 4.125 inches tall
(1825 2825)	average dose over water jacket cutout area - outer edge water jacket - 4.125 inches tall
1826	area on lifting trunnion in water jacket cutout area - 6 in from water jacket - 4.125 inches tall
2826	area not on lifting trunnion in water jacket cutout area - 6 in from water jacket - 4.125 inches tall
(1825 2826)	average dose over water jacket cutout area - 6 in from water jacket - 4.125 inches tall
1827	area on lifting trunnion in water jacket cutout area - 1 ft from water jacket - 4.125 inches tall
2827	area not on lifting trunnion in water jacket cutout area - 1 ft from water jacket - 4.125 inches tall
(1827 2827)	average dose over water jacket cutout area - 1 ft from water jacket - 4.125 inches tall
1828	area on lifting trunnion in water jacket cutout area - 2 ft from water jacket - 4.125 inches tall
2828	area not on lifting trunnion in water jacket cutout area - 2 ft from water jacket - 4.125 inches tall
(1828 2828)	average dose over water jacket cutout area - 2 ft from water jacket - 4.125 inches tall
1829	area on lifting trunnion in water jacket cutout area - 1 m from water jacket - 4.125 inches tall
2829	area not on lifting trunnion in water jacket cutout area - 1 m from water jacket - 4.125 inches tall
(1829 2829)	average dose over water jacket cutout area - 1 m from water jacket - 4.125 inches tall
825	outer edge of water jacket
826	6 inches from outer edge of water jacket
827	1 foot from outer edge of water jacket
828	2 foot from outer edge of water jacket
829	1 meter from outer edge of water jacket

segmentation for surfaces 825-829

segment number	surface start	surface finish	start cm	finish cm	width cm	width in	
1	898	696	-198.73	-172.72	26.01	10.2402	
2	696	697	-172.72	-142.24	30.48	12	
3	697	698	-142.24	-111.76	30.48	12	
4	698	699	-111.76	-81.28	30.48	12	
5	699	700	-81.28	-50.8	30.48	12	
6	700	701	-50.8	-20.32	30.48	12	
7	701	702	-20.32	-10.16	10.16	4	
8	702	703	-10.16	5.08	15.24	6	1.27 bottom of pool lid
9	703	704	5.08	20.32	15.24	6	15.24 bottom of hitrac without lid
10	704	705	20.32	35.56	15.24	6	20.32 start of lower water jacket
11	705	706	35.56	50.8	15.24	6	35.56 end of lower water jacket
12	706	707	50.8	66.04	15.24	6	
13	707	708	66.04	81.28	15.24	6	
14	708	709	81.28	96.52	15.24	6	
15	709	710	96.52	111.76	15.24	6	
16	710	712	111.76	142.24	30.48	12	
17	712	714	142.24	172.72	30.48	12	
18	714	716	172.72	203.2	30.48	12	
19	716	718	203.2	233.68	30.48	12	
20	718	720	233.68	264.16	30.48	12	236.1565 middle of active fuel
21	720	722	264.16	294.64	30.48	12	
22	722	724	294.64	325.12	30.48	12	
23	724	726	325.12	355.6	30.48	12	
24	726	728	355.6	386.08	30.48	12	
25	728	730	386.08	416.56	30.48	12	
26	730	731	416.56	431.8	15.24	6	
27	731	732	431.8	447.04	15.24	6	
28	732	733	447.04	462.28	15.24	6	458.7875 end of water jacket below trunnion
29	733	734	462.28	477.52	15.24	6	469.265 end of water jacket
30	734	735	477.52	492.76	15.24	6	489.585 start of upper forging
31	735	736	492.76	508	15.24	6	501.015 top of hitrac without top lid
32	736	737	508	523.24	15.24	6	513.08 top of top lid
33	737	738	523.24	538.48	15.24	6	
34	738	740	538.48	568.96	30.48	12	
35	740	742	568.96	599.44	30.48	12	
36	742	744	599.44	629.92	30.48	12	
37	744	746	629.92	660.4	30.48	12	
38	746	748	660.4	690.88	30.48	12	
39	748	885	690.88	713.08	22.2	8.74016	

BW 15x15 4.0 wt% U235 BPRA curies 331.000
55,000 MWD/MTU

12.0 YR	12.0 YR	12.0 YR	12.0 YR			side125t				num fuel	24
	u4n5a02m		u4n5a02m		u4p5a02m	u4q5a02m	u4c5a02m				
	neutron		phot (n,p)		phot		cobalt			total	
	value	rel err	value	rel err	value	rel err	value	rel err		value	rel err
sur	817										
1	133.593	0.023	23.276	0.022	1.863	0.044	36.494	0.009		195.225	0.016
sur	832										
1	261.379	0.016	4.211	0.070	0.325	0.106	25.173	0.011		291.088	0.015
sur	813										
1	105.182	0.047	1.324	0.126	0.113	0.265	2.793	0.042		109.413	0.046
tal	112										
sur	830										
1	370.368	0.072	7.206	0.199	0.763	0.265	86.300	0.027		464.638	0.057
sur	831										
1	441.198	0.049	8.788	0.126	0.652	0.203	49.227	0.023		499.865	0.043
sur	(830 831)										
1	415.723	0.041	8.219	0.107	0.692	0.164	62.561	0.019		487.195	0.035
sur	1825										
1	149.298	0.066	3.575	0.163	0.450	0.257	48.167	0.024		201.489	0.049
sur	2825										
1	168.180	0.052	4.906	0.102	0.496	0.181	32.431	0.021		206.013	0.043
sur	(1825 2825)										
1	161.478	0.041	4.434	0.087	0.479	0.151	38.016	0.017		204.407	0.033
sur	1826										
1	74.692	0.081	3.283	0.176	1.583	0.530	28.604	0.023		108.161	0.057
sur	2826										
1	81.444	0.070	4.811	0.125	0.869	0.193	22.438	0.019		109.562	0.053
sur	(1826 2826)										
1	79.040	0.054	4.267	0.103	1.123	0.284	24.633	0.017		109.062	0.040
sur	1827										
1	52.897	0.106	5.307	0.147	1.293	0.171	19.114	0.025		78.609	0.072
sur	2827										
1	55.111	0.089	4.071	0.118	1.137	0.089	16.538	0.020		76.858	0.064
sur	(1827 2827)										
1	54.321	0.069	4.512	0.092	1.193	0.088	17.457	0.017		77.483	0.049
sur	1828										
1	32.019	0.174	5.042	0.131	2.516	0.156	11.135	0.030		50.712	0.111
sur	2828										
1	29.412	0.103	4.608	0.107	2.048	0.143	10.013	0.023		46.081	0.067
sur	(1828 2828)										
1	30.345	0.093	4.763	0.083	2.215	0.106	10.414	0.020		47.738	0.060
sur	1829										
1	19.925	0.189	5.423	0.140	2.108	0.159	6.663	0.038		34.119	0.113
sur	2829										
1	20.049	0.125	5.130	0.112	2.505	0.107	5.852	0.029		33.535	0.077
sur	(1829 2829)										
1	20.004	0.105	5.235	0.087	2.362	0.089	6.143	0.024		33.745	0.064

BW 15x15 4.0 wt% U235 BPRA curies 331.000
55,000 MWD/MTU

12.0 YR	12.0 YR	12.0 YR	12.0 YR			side125t				num fuel	24
	u4n5a02m		u4n5a02m		u4p5a02m	u4q5a02m	u4c5a02m				
	neutron		phot (n,p)		phot		cobalt			total	
	value	rel err	value	rel err	value	rel err	value	rel err		value	rel err
tal	122										
sur	825										
1	79.299	0.031	0.286	0.272	0.181	0.718	13.757	0.374		93.524	0.061
2	93.747	0.026	0.183	0.212	0.211	0.506	15.933	0.271		110.073	0.045
3	108.617	0.022	0.213	0.210	0.263	0.439	16.726	0.265		125.819	0.040
4	123.182	0.019	0.434	0.175	0.364	0.365	26.045	0.243		150.024	0.045
5	143.157	0.017	0.472	0.139	2.334	0.425	12.135	0.254		158.097	0.026
6	141.715	0.016	1.087	0.101	2.296	0.612	11.158	0.215		156.255	0.023
7	111.019	0.028	1.604	0.132	0.323	0.174	6.325	0.280		119.272	0.030
8	84.395	0.024	3.248	0.085	0.341	0.094	4.521	0.075		92.505	0.022
9	117.534	0.019	7.119	0.036	0.800	0.060	13.987	0.010		139.440	0.016
10	102.687	0.019	13.614	0.025	1.600	0.038	25.654	0.009		143.555	0.014
11	24.685	0.041	16.374	0.021	4.381	0.030	19.696	0.009		65.136	0.017
12	27.684	0.055	23.855	0.019	10.679	0.025	14.786	0.008		77.004	0.021
13	34.831	0.047	30.378	0.017	18.033	0.025	4.378	0.012		87.620	0.020
14	55.973	0.041	38.640	0.015	22.931	0.027	0.800	0.023		118.344	0.021
15	67.385	0.038	45.408	0.015	26.244	0.030	0.131	0.055		139.168	0.020
16	75.705	0.027	53.722	0.010	27.219	0.028	0.013	0.104		156.659	0.014
17	82.253	0.025	61.618	0.009	26.916	0.029	0.004	0.163		170.790	0.013
18	83.586	0.025	62.990	0.009	27.381	0.029	0.004	0.208		173.961	0.013
19	88.254	0.025	62.557	0.009	26.224	0.029	0.003	0.240		177.039	0.013
20	82.139	0.025	60.351	0.009	25.695	0.030	0.002	0.188		168.187	0.014
21	81.923	0.027	57.842	0.009	25.847	0.029	0.002	0.230		165.614	0.014
22	73.094	0.026	52.049	0.010	26.533	0.029	0.003	0.283		151.679	0.014
23	62.197	0.027	44.537	0.010	25.892	0.028	0.008	0.129		132.634	0.014
24	45.144	0.032	34.140	0.011	22.675	0.024	0.167	0.032		102.125	0.016
25	23.843	0.034	21.588	0.013	14.227	0.020	4.195	0.010		63.853	0.014
26	12.233	0.053	14.923	0.020	5.476	0.026	15.762	0.009		48.394	0.015
27	9.402	0.061	11.380	0.020	2.085	0.030	20.236	0.007		43.102	0.015
28	18.211	0.043	8.661	0.027	0.728	0.046	16.425	0.008		44.024	0.019
29	105.606	0.020	4.058	0.034	0.321	0.068	17.120	0.010		127.106	0.016
30	132.878	0.019	2.566	0.047	0.276	0.095	15.226	0.012		150.946	0.017
31	78.041	0.027	1.993	0.069	0.497	0.317	5.477	0.048		86.008	0.024
32	44.845	0.040	1.279	0.086	0.439	0.521	3.251	0.125		49.814	0.037
33	32.431	0.050	0.932	0.096	0.830	0.563	3.436	0.171		37.628	0.048
34	18.833	0.046	0.934	0.080	2.880	0.654	5.030	0.187		27.677	0.082
35	13.310	0.054	0.666	0.102	1.558	0.602	7.128	0.228		22.664	0.089
36	12.610	0.069	0.594	0.101	0.435	0.738	3.457	0.317		17.096	0.084
37	10.281	0.066	0.375	0.139	0.615	0.660	7.402	0.284		18.674	0.120
38	8.000	0.092	0.399	0.184	0.022	0.510	4.046	0.449		12.467	0.157
39	7.378	0.102	0.297	0.169	0.019	0.448	5.122	0.508		12.816	0.211
sur	826										
1	70.272	0.029	0.171	0.189	0.220	0.493	11.761	0.324		82.423	0.052
2	78.522	0.023	0.328	0.168	0.227	0.430	23.447	0.235		102.523	0.057

BW 15x15 4.0 wt% U235 BPRA curies 331.000
55,000 MWD/MTU

12.0 YR	12.0 YR	12.0 YR	12.0 YR			side125t				num fuel	24
	u4n5a02m		u4n5a02m		u4p5a02m	u4q5a02m	u4c5a02m				
	neutron		phot (n,p)		phot		cobalt			total	
	value	rel err	value	rel err	value	rel err	value	rel err		value	rel err
3	90.897	0.021	0.512	0.134	0.565	0.336	12.055	0.291		104.029	0.038
4	103.960	0.018	0.659	0.115	0.744	0.402	10.525	0.271		115.888	0.030
5	104.362	0.017	0.855	0.098	2.906	0.500	7.190	0.267		115.313	0.026
6	94.363	0.016	1.701	0.054	0.359	0.154	6.230	0.218		102.654	0.020
7	71.970	0.029	2.838	0.069	0.308	0.107	4.250	0.269		79.366	0.030
8	59.925	0.024	4.264	0.045	0.511	0.075	5.717	0.052		70.417	0.021
9	68.836	0.021	6.511	0.034	1.128	0.042	11.929	0.010		88.404	0.016
10	64.761	0.021	10.095	0.024	2.119	0.031	16.560	0.009		93.535	0.015
11	32.320	0.030	13.920	0.021	5.032	0.025	14.190	0.008		65.462	0.016
12	27.620	0.039	19.126	0.019	9.161	0.023	10.761	0.008		66.668	0.017
13	30.880	0.037	23.955	0.017	14.453	0.023	5.274	0.009		74.562	0.017
14	41.164	0.035	29.490	0.015	18.396	0.023	1.897	0.012		90.948	0.017
15	49.579	0.032	33.949	0.014	20.812	0.026	0.632	0.018		104.973	0.016
16	57.633	0.023	39.787	0.009	22.264	0.024	0.163	0.025		119.847	0.012
17	63.327	0.021	45.163	0.009	22.339	0.025	0.041	0.060		130.870	0.011
18	65.985	0.021	47.899	0.009	22.248	0.025	0.020	0.093		136.152	0.011
19	66.170	0.021	47.932	0.009	22.056	0.025	0.021	0.113		136.180	0.011
20	63.773	0.021	46.187	0.009	21.518	0.025	0.014	0.143		131.493	0.011
21	59.653	0.021	43.480	0.009	21.337	0.025	0.021	0.098		124.491	0.011
22	55.691	0.022	39.246	0.009	22.066	0.025	0.034	0.066		117.036	0.012
23	46.068	0.023	33.694	0.010	20.863	0.024	0.107	0.031		100.732	0.012
24	35.736	0.026	26.081	0.011	18.181	0.022	0.635	0.013		80.634	0.013
25	20.227	0.032	17.838	0.013	11.391	0.019	4.625	0.008		54.081	0.013
26	12.184	0.047	12.575	0.020	5.346	0.023	11.275	0.008		41.380	0.016
27	10.847	0.050	8.909	0.021	2.855	0.031	13.419	0.007		36.031	0.016
28	24.805	0.045	6.933	0.027	1.232	0.041	12.538	0.007		45.507	0.025
29	61.263	0.023	4.212	0.034	0.630	0.075	12.053	0.009		78.158	0.018
30	78.359	0.021	2.344	0.048	0.390	0.131	11.884	0.012		92.977	0.018
31	61.704	0.025	1.646	0.054	0.437	0.244	6.981	0.032		70.768	0.022
32	46.689	0.033	1.463	0.068	0.518	0.402	3.266	0.051		51.936	0.030
33	27.862	0.042	1.191	0.077	0.718	0.551	3.115	0.141		32.887	0.040
34	21.303	0.036	0.855	0.058	0.273	0.392	2.971	0.166		25.402	0.036
35	15.309	0.051	0.671	0.077	2.222	0.662	3.748	0.236		21.950	0.086
36	10.817	0.054	0.514	0.086	1.143	0.701	6.227	0.230		18.701	0.093
37	9.001	0.061	0.471	0.092	0.491	0.649	2.973	0.323		12.935	0.089
38	7.685	0.067	0.296	0.112	0.298	0.674	4.535	0.345		12.813	0.130
39	7.253	0.092	0.342	0.154	0.024	0.408	4.092	0.427		11.711	0.160
sur	827										
1	62.940	0.026	0.438	0.186	0.219	0.418	22.065	0.252		85.661	0.068
2	67.397	0.022	0.345	0.102	0.503	0.330	10.541	0.288		78.786	0.043
3	75.913	0.020	0.599	0.102	0.622	0.416	8.091	0.299		85.226	0.034
4	83.073	0.018	0.815	0.085	2.464	0.523	6.599	0.296		92.951	0.030
5	79.792	0.017	1.244	0.058	0.390	0.233	6.339	0.242		87.765	0.024
6	67.168	0.017	2.388	0.039	0.322	0.059	4.497	0.216		74.374	0.020

BW 15x15 4.0 wt% U235 BPRA curies 331.000
55,000 MWD/MTU

12.0 YR	12.0 YR	12.0 YR	12.0 YR			side125t			num fuel	24
	u4n5a02m		u4n5a02m		u4p5a02m	u4q5a02m	u4c5a02m			
	neutron		phot (n,p)		phot		cobalt		total	
	value	rel err	value	rel err	value	rel err	value	rel err	value	rel err
7	55.015	0.031	3.536	0.052	0.523	0.084	4.226	0.166	63.301	0.029
8	45.532	0.026	4.998	0.037	0.931	0.047	5.508	0.012	56.968	0.021
9	47.775	0.023	7.107	0.029	1.530	0.035	9.843	0.010	66.255	0.017
10	44.933	0.024	9.913	0.025	2.815	0.029	11.766	0.009	69.428	0.016
11	34.546	0.028	13.025	0.020	5.154	0.024	10.610	0.008	63.335	0.016
12	27.237	0.038	16.350	0.019	8.619	0.022	8.521	0.008	60.727	0.018
13	29.364	0.034	20.498	0.017	12.058	0.022	5.078	0.008	66.997	0.016
14	37.294	0.033	24.651	0.015	15.086	0.022	2.529	0.010	79.560	0.017
15	42.640	0.030	27.827	0.014	17.808	0.024	1.120	0.013	89.395	0.016
16	47.693	0.023	32.549	0.009	18.871	0.021	0.386	0.015	99.500	0.012
17	52.967	0.020	36.700	0.009	19.525	0.023	0.113	0.026	109.305	0.011
18	55.900	0.020	39.637	0.009	19.119	0.023	0.052	0.042	114.707	0.011
19	56.372	0.020	39.657	0.009	19.595	0.023	0.035	0.061	115.659	0.011
20	53.845	0.020	38.674	0.009	18.752	0.023	0.034	0.056	111.305	0.011
21	50.741	0.020	35.872	0.009	18.750	0.023	0.049	0.043	105.412	0.011
22	45.594	0.020	32.746	0.009	18.966	0.023	0.088	0.028	97.395	0.011
23	39.463	0.022	27.732	0.010	17.936	0.022	0.256	0.016	85.387	0.012
24	29.819	0.024	22.047	0.011	15.471	0.020	1.088	0.009	68.426	0.012
25	18.673	0.029	15.878	0.013	9.870	0.018	4.494	0.007	48.915	0.012
26	14.651	0.045	11.581	0.020	5.202	0.023	8.580	0.007	40.013	0.018
27	15.288	0.042	8.852	0.022	3.049	0.025	9.927	0.007	37.116	0.018
28	24.990	0.032	6.504	0.026	1.665	0.031	9.861	0.007	43.021	0.019
29	42.003	0.026	4.403	0.030	0.973	0.042	9.317	0.008	56.696	0.019
30	50.953	0.024	3.249	0.042	0.607	0.085	9.101	0.012	63.910	0.019
31	45.522	0.026	2.245	0.051	0.608	0.161	7.054	0.028	55.429	0.022
32	37.202	0.030	1.671	0.058	0.541	0.333	3.840	0.033	43.254	0.026
33	30.531	0.036	1.527	0.071	0.361	0.388	2.546	0.085	34.964	0.032
34	20.345	0.034	0.986	0.048	0.324	0.469	2.162	0.124	23.818	0.032
35	14.460	0.041	0.789	0.064	1.548	0.773	2.794	0.191	19.591	0.073
36	11.940	0.054	0.616	0.077	0.649	0.512	5.220	0.219	18.426	0.074
37	8.260	0.056	0.394	0.076	0.908	0.774	2.369	0.321	11.932	0.095
38	7.922	0.063	0.374	0.106	0.433	0.533	3.895	0.314	12.623	0.106
39	6.235	0.089	0.331	0.131	0.260	0.928	4.061	0.401	10.887	0.160
sur	828									
1	49.045	0.024	0.456	0.081	0.327	0.383	7.936	0.299	57.764	0.046
2	50.702	0.021	0.565	0.066	0.360	0.503	3.409	0.384	55.036	0.031
3	55.851	0.019	0.999	0.063	1.861	0.553	5.666	0.288	64.378	0.034
4	52.861	0.019	1.382	0.050	0.530	0.396	3.490	0.303	58.263	0.025
5	49.901	0.018	2.349	0.039	0.391	0.058	3.730	0.246	56.371	0.023
6	39.618	0.019	3.578	0.028	0.642	0.041	3.074	0.162	46.913	0.019
7	32.282	0.033	4.977	0.040	0.997	0.051	3.772	0.087	42.028	0.027
8	29.635	0.029	5.847	0.028	1.444	0.038	4.809	0.011	41.735	0.021
9	28.539	0.027	7.365	0.026	2.254	0.029	6.482	0.010	44.640	0.018
10	29.003	0.027	9.559	0.023	3.562	0.027	6.876	0.009	49.000	0.017

BW 15x15 4.0 wt% U235 BPRA curies 331.000
55,000 MWD/MTU

12.0 YR	12.0 YR u4n5a02m neutron value	12.0 YR rel err	12.0 YR u4n5a02m phot (n,p) value	rel err	side125t u4p5a02m phot value	rel err	u4q5a02m u4c5a02m cobalt value	rel err	num fuel total value	24 rel err
11	26.898	0.028	11.772	0.020	5.096	0.024	6.490	0.009	50.255	0.016
12	25.318	0.031	13.476	0.018	7.101	0.022	5.543	0.009	51.438	0.016
13	27.902	0.033	15.384	0.017	9.192	0.022	4.219	0.009	56.697	0.017
14	29.338	0.032	18.734	0.015	11.416	0.022	2.763	0.009	62.250	0.016
15	32.029	0.030	20.575	0.014	13.136	0.023	1.678	0.011	67.418	0.015
16	35.720	0.021	23.190	0.010	14.180	0.019	0.775	0.010	73.865	0.011
17	38.526	0.020	26.876	0.009	15.323	0.020	0.305	0.015	81.030	0.011
18	42.861	0.019	27.857	0.009	15.358	0.020	0.142	0.020	86.218	0.011
19	42.836	0.019	28.997	0.009	15.486	0.020	0.098	0.023	87.418	0.010
20	40.520	0.019	28.316	0.009	15.150	0.020	0.093	0.024	84.079	0.010
21	38.650	0.020	26.632	0.009	14.921	0.021	0.127	0.020	80.329	0.011
22	34.765	0.020	24.242	0.009	14.712	0.020	0.236	0.014	73.955	0.011
23	29.301	0.022	20.580	0.010	13.812	0.020	0.575	0.010	64.268	0.011
24	23.344	0.023	16.899	0.011	11.652	0.020	1.554	0.008	53.449	0.012
25	17.319	0.026	13.046	0.013	7.885	0.018	3.708	0.007	41.958	0.012
26	15.852	0.037	9.880	0.019	4.926	0.023	5.506	0.008	36.164	0.017
27	17.721	0.034	8.437	0.022	3.522	0.025	6.238	0.007	35.919	0.018
28	21.186	0.033	6.660	0.025	2.271	0.028	6.264	0.007	36.382	0.020
29	25.409	0.030	5.397	0.030	1.547	0.036	6.124	0.011	38.477	0.020
30	26.883	0.028	4.201	0.033	0.945	0.040	5.960	0.023	37.990	0.021
31	29.748	0.029	3.373	0.039	0.805	0.102	5.413	0.018	39.339	0.022
32	25.555	0.031	2.469	0.041	0.671	0.218	3.976	0.015	32.671	0.025
33	22.585	0.034	1.896	0.049	0.411	0.118	2.827	0.039	27.718	0.028
34	17.910	0.029	1.476	0.041	0.468	0.303	2.099	0.092	21.953	0.026
35	13.735	0.035	1.036	0.051	0.233	0.272	1.382	0.128	16.386	0.032
36	10.869	0.041	0.802	0.058	1.054	0.862	2.317	0.203	15.042	0.074
37	7.960	0.047	0.619	0.061	0.381	0.452	3.192	0.263	12.152	0.077
38	6.990	0.053	0.538	0.072	0.491	0.516	2.037	0.296	10.056	0.075
39	5.227	0.069	0.369	0.090	0.842	0.918	2.655	0.330	9.093	0.134
sur	829									
1	35.115	0.024	0.850	0.063	1.485	0.644	3.576	0.359	41.026	0.044
2	35.833	0.021	1.126	0.051	0.452	0.369	2.402	0.353	39.813	0.029
3	35.658	0.020	1.699	0.042	0.451	0.370	2.577	0.320	40.384	0.028
4	33.425	0.020	2.162	0.032	0.393	0.056	2.579	0.267	38.559	0.025
5	29.634	0.020	3.085	0.028	0.554	0.038	2.039	0.240	35.312	0.022
6	24.507	0.021	4.228	0.022	1.025	0.029	2.720	0.131	32.481	0.019
7	20.445	0.037	5.372	0.034	1.601	0.045	2.962	0.016	30.380	0.026
8	20.417	0.030	6.154	0.026	1.901	0.032	3.483	0.012	31.954	0.020
9	19.361	0.031	7.290	0.023	2.595	0.028	4.017	0.011	33.263	0.019
10	20.141	0.030	8.509	0.021	3.620	0.026	4.069	0.010	36.338	0.018
11	20.669	0.030	9.650	0.019	4.631	0.023	3.946	0.010	38.896	0.017
12	21.511	0.031	10.901	0.018	5.792	0.023	3.557	0.010	41.761	0.017
13	22.536	0.031	12.309	0.017	7.317	0.023	3.002	0.010	45.164	0.017
14	23.617	0.030	13.796	0.015	8.557	0.024	2.364	0.010	48.333	0.016

BW 15x15 4.0 wt% U235 BPRA curies 331.000
55,000 MWD/MTU

12.0 YR	12.0 YR	12.0 YR	12.0 YR		side125t				num fuel	24
	u4n5a02m		u4n5a02m		u4p5a02m	u4q5a02m	u4c5a02m			
	neutron		phot (n,p)		phot		cobalt		total	
	value	rel err	value	rel err	value	rel err	value	rel err	value	rel err
15	24.703	0.029	14.949	0.015	9.591	0.024	1.734	0.010	50.977	0.015
16	25.877	0.021	16.570	0.010	10.410	0.019	1.052	0.009	53.908	0.011
17	28.913	0.020	18.472	0.009	11.757	0.019	0.507	0.011	59.649	0.011
18	31.662	0.019	20.030	0.009	12.074	0.018	0.288	0.013	64.054	0.011
19	30.931	0.020	20.055	0.009	11.982	0.019	0.199	0.015	63.166	0.011
20	30.537	0.019	19.871	0.009	11.920	0.019	0.188	0.014	62.516	0.011
21	29.294	0.019	19.207	0.009	11.614	0.019	0.243	0.012	60.358	0.011
22	25.520	0.021	17.283	0.010	11.347	0.019	0.423	0.010	54.573	0.011
23	21.948	0.022	15.141	0.010	10.293	0.019	0.808	0.008	48.190	0.011
24	19.061	0.023	12.979	0.011	8.601	0.019	1.596	0.008	42.237	0.012
25	15.354	0.024	10.485	0.013	6.444	0.019	2.748	0.007	35.031	0.012
26	14.929	0.034	8.725	0.020	4.548	0.023	3.589	0.008	31.790	0.017
27	15.322	0.033	7.828	0.021	3.391	0.025	3.851	0.008	30.392	0.018
28	15.985	0.033	6.412	0.022	2.655	0.027	3.944	0.009	28.996	0.019
29	16.846	0.032	5.363	0.025	1.990	0.030	4.003	0.026	28.202	0.020
30	17.019	0.032	4.725	0.028	1.470	0.034	3.788	0.014	27.002	0.021
31	18.261	0.032	3.950	0.031	1.143	0.080	3.625	0.019	26.979	0.022
32	17.135	0.034	3.263	0.034	0.908	0.081	3.180	0.013	24.486	0.024
33	16.182	0.034	2.786	0.038	0.622	0.057	2.680	0.027	22.270	0.026
34	13.776	0.027	2.154	0.032	0.482	0.130	1.857	0.038	18.269	0.022
35	11.232	0.032	1.598	0.038	0.376	0.260	1.433	0.105	14.639	0.028
36	9.550	0.037	1.154	0.043	0.165	0.102	1.125	0.188	11.993	0.035
37	7.941	0.041	0.864	0.053	0.908	0.780	1.600	0.207	11.313	0.075
38	6.272	0.046	0.710	0.056	0.125	0.148	2.361	0.252	9.468	0.070
39	5.504	0.062	0.593	0.079	0.406	0.467	1.270	0.460	7.774	0.091

BW 15x15 4.0 wt% U235 BPRA curies 331

12.0 YR 12.0 YR 12.0 YR 12.0 YR side125t

u4n5a02m u4n5a02m u4p5a02m u4q5a02m u4c5a02m num assem 24

Average dose rate on surface over entire height of overpack

Total dose

Segment	heights	825	826	827	828	829
8	15.24	92.505	70.417	56.968	41.735	31.954
9	15.24	139.440	88.404	66.255	44.640	33.263
10	15.24	143.555	93.535	69.428	49.000	36.338
11	15.24	65.136	65.462	63.335	50.255	38.896
12	15.24	77.004	66.668	60.727	51.438	41.761
13	15.24	87.620	74.562	66.997	56.697	45.164
14	15.24	118.344	90.948	79.560	62.250	48.333
15	15.24	139.168	104.973	89.395	67.418	50.977
16	30.48	156.659	119.847	99.500	73.865	53.908
17	30.48	170.790	130.870	109.305	81.030	59.649
18	30.48	173.961	136.152	114.707	86.218	64.054
19	30.48	177.039	136.180	115.659	87.418	63.166
20	30.48	168.187	131.493	111.305	84.079	62.516
21	30.48	165.614	124.491	105.412	80.329	60.358
22	30.48	151.679	117.036	97.395	73.955	54.573
23	30.48	132.634	100.732	85.387	64.268	48.190
24	30.48	102.125	80.634	68.426	53.449	42.237
25	30.48	63.853	54.081	48.915	41.958	35.031
26	15.24	48.394	41.380	40.013	36.164	31.790
27	15.24	43.102	36.031	37.116	35.919	30.392
28	15.24	44.024	45.507	43.021	36.382	28.996
29	15.24	127.106	78.158	56.696	38.477	28.202
30	15.24	150.946	92.977	63.910	37.990	27.002
31	15.24	86.008	70.768	55.429	39.339	26.979
Surface average						
total	518.16	126.101	96.554	81.202	61.789	46.689

BW 15x15 4.0 wt% U235 BPRA curies 331
55,000 MWD/MTU
12.0 YR 12.0 YR 12.0 YR 12.0 YR side125t num fuel 24

		u4n5a04m neutron value	rel err	u4n5a04m phot (n,p) value	rel err	u4p5a04m phot value	rel err	u4q5a04m u4c5a04m cobalt value	rel err	total value	rel err
sur		832									
	1	258.122	0.016	4.022	0.063	0.327	0.105	25.186	0.011	287.657	0.015
sur		813									
	1	91.540	0.040	1.163	0.123	0.113	0.265	2.761	0.041	95.576	0.039
tal		112									
sur		830									
	1	367.612	0.071	6.665	0.198	0.763	0.265	86.316	0.027	461.356	0.057
sur		831									
	1	451.641	0.049	8.356	0.129	0.651	0.203	49.205	0.023	509.853	0.044
sur		(830 831)									
	1	421.419	0.042	7.748	0.108	0.691	0.164	62.553	0.019	492.411	0.036
sur		1825									
	1	150.625	0.067	3.376	0.165	0.453	0.255	48.176	0.024	202.630	0.050
sur		2825									
	1	173.015	0.052	5.213	0.100	0.496	0.181	32.437	0.021	211.160	0.042
sur		(1825 2825)									
	1	165.067	0.041	4.561	0.086	0.481	0.151	38.024	0.017	208.132	0.033
sur		1826									
	1	69.149	0.087	3.809	0.188	1.583	0.530	28.626	0.023	103.167	0.059
sur		2826									
	1	80.773	0.071	4.828	0.120	0.869	0.193	22.421	0.019	108.891	0.053
sur		(1826 2826)									
	1	76.634	0.056	4.465	0.101	1.123	0.283	24.630	0.017	106.852	0.041
sur		1827									
	1	51.287	0.114	5.369	0.145	1.294	0.171	19.119	0.025	77.070	0.077
sur		2827									
	1	52.126	0.092	4.020	0.117	1.137	0.089	16.536	0.020	73.820	0.065
sur		(1827 2827)									
	1	51.827	0.072	4.502	0.092	1.193	0.088	17.457	0.017	74.980	0.050
sur		1828									
	1	33.093	0.178	5.193	0.130	2.517	0.156	11.130	0.030	51.932	0.115
sur		2828									
	1	28.110	0.107	4.778	0.105	2.050	0.143	10.018	0.023	44.957	0.068
sur		(1828 2828)									
	1	29.893	0.095	4.927	0.082	2.217	0.106	10.416	0.020	47.452	0.061
sur		1829									
	1	25.944	0.185	5.362	0.140	2.108	0.159	6.660	0.038	40.075	0.122
sur		2829									
	1	18.686	0.137	4.885	0.112	2.507	0.107	5.860	0.029	31.938	0.083
sur		(1829 2829)									
	1	21.288	0.112	5.056	0.087	2.364	0.089	6.147	0.024	34.854	0.070

BW 15x15 4.0 wt% U235 BPRA curies 331
55,000 MWD/MTU

12.0 YR	12.0 YR	12.0 YR	12.0 YR			side125t			num fuel	24
	u4n5a04m		u4n5a04m		u4p5a04m	u4q5a04m	u4c5a04m			
	neutron		phot (n,p)		phot		cobalt		total	
	value	rel err	value	rel err	value	rel err	value	rel err	value	rel err
tal	122									
sur	825									
25	24.242	0.034	21.616	0.013	14.228	0.020	4.198	0.010	64.283	0.014
26	12.437	0.054	15.132	0.020	5.478	0.026	15.763	0.009	48.811	0.016
27	9.389	0.061	11.349	0.020	2.086	0.030	20.245	0.007	43.069	0.015
28	18.238	0.044	8.515	0.027	0.727	0.046	16.426	0.008	43.906	0.019
29	104.141	0.020	4.102	0.034	0.322	0.068	17.122	0.010	125.687	0.016
30	130.824	0.019	2.481	0.048	0.276	0.094	15.234	0.012	148.816	0.017
31	74.917	0.027	1.831	0.074	0.223	0.320	4.807	0.020	81.779	0.025
32	54.301	0.034	1.189	0.091	0.424	0.631	5.534	0.240	61.448	0.038
33	53.917	0.034	1.024	0.098	0.892	0.654	9.466	0.202	65.299	0.042
34	52.462	0.024	0.728	0.083	4.019	0.397	29.713	0.120	86.922	0.047
35	48.598	0.026	0.592	0.110	1.996	0.339	28.440	0.130	79.626	0.050
36	40.961	0.032	0.554	0.102	8.144	0.373	26.070	0.150	75.729	0.068
37	36.765	0.035	0.360	0.156	4.816	0.404	26.889	0.169	68.831	0.074
38	31.089	0.043	0.381	0.196	2.586	0.384	32.224	0.171	66.279	0.087
39	26.238	0.053	0.328	0.171	8.258	0.427	26.625	0.241	61.449	0.121
sur	826									
25	20.490	0.032	17.933	0.013	11.392	0.019	4.628	0.008	54.442	0.013
26	12.063	0.048	12.572	0.020	5.348	0.023	11.275	0.008	41.258	0.016
27	10.701	0.050	8.875	0.022	2.855	0.031	13.427	0.007	35.859	0.016
28	24.673	0.046	6.905	0.027	1.232	0.041	12.544	0.007	45.353	0.025
29	60.765	0.023	4.213	0.034	0.629	0.075	12.056	0.009	77.663	0.018
30	76.316	0.021	2.369	0.048	0.348	0.108	11.825	0.011	90.858	0.018
31	60.718	0.025	1.560	0.056	0.271	0.183	6.513	0.015	69.062	0.022
32	50.478	0.031	1.344	0.073	0.373	0.630	5.491	0.206	57.685	0.034
33	39.960	0.033	1.108	0.081	0.228	0.396	5.616	0.220	46.912	0.038
34	42.351	0.023	0.852	0.060	2.373	0.402	10.864	0.152	56.439	0.038
35	39.622	0.027	0.586	0.086	2.034	0.418	20.154	0.138	62.396	0.050
36	35.032	0.028	0.454	0.100	0.903	0.331	21.147	0.133	57.537	0.052
37	30.069	0.032	0.419	0.093	4.133	0.395	17.955	0.165	52.575	0.067
38	26.279	0.036	0.277	0.123	2.105	0.368	17.356	0.176	46.017	0.071
39	24.577	0.047	0.298	0.148	6.653	0.494	23.503	0.189	55.032	0.103
sur	827									
25	18.829	0.029	15.917	0.013	9.871	0.018	4.495	0.007	49.112	0.012
26	14.579	0.045	11.599	0.021	5.203	0.023	8.581	0.007	39.962	0.018
27	14.921	0.042	8.826	0.023	3.051	0.025	9.933	0.007	36.731	0.018
28	24.788	0.033	6.424	0.026	1.665	0.031	9.866	0.007	42.742	0.020
29	41.593	0.026	4.473	0.030	0.973	0.042	9.318	0.008	56.357	0.019
30	49.950	0.024	3.261	0.042	0.567	0.073	9.029	0.011	62.805	0.019
31	44.997	0.026	2.203	0.052	0.481	0.110	6.673	0.014	54.354	0.022
32	39.543	0.029	1.599	0.057	0.276	0.153	5.245	0.161	46.662	0.030
33	38.240	0.031	1.441	0.074	0.342	0.509	3.382	0.190	43.405	0.032
34	33.719	0.024	0.962	0.050	0.410	0.480	6.208	0.156	41.298	0.031

BW 15x15 4.0 wt% U235 BPRA curies 331
55,000 MWD/MTU
12.0 YR 12.0 YR 12.0 YR 12.0 YR side125t num fuel 24

		u4n5a04m neutron value	rel err	u4n5a04m phot (n,p) value	rel err	u4p5a04m phot value	rel err	u4q5a04m u4c5a04m cobalt value	rel err	total value	rel err
	35	32.036	0.025	0.760	0.067	2.129	0.395	12.314	0.141	47.240	0.044
	36	31.393	0.029	0.536	0.087	1.743	0.380	17.705	0.143	51.377	0.054
	37	25.462	0.031	0.373	0.084	0.418	0.397	13.066	0.156	39.320	0.056
	38	24.242	0.033	0.367	0.113	3.303	0.411	14.017	0.181	41.928	0.071
	39	20.357	0.045	0.332	0.135	1.620	0.410	13.208	0.214	35.516	0.086
sur		828									
	25	17.492	0.026	13.086	0.013	7.885	0.018	3.710	0.007	42.173	0.012
	26	15.716	0.037	9.884	0.019	4.927	0.023	5.510	0.008	36.037	0.017
	27	17.322	0.035	8.441	0.022	3.523	0.025	6.243	0.007	35.529	0.018
	28	20.969	0.034	6.594	0.025	2.264	0.028	6.269	0.007	36.096	0.020
	29	25.175	0.030	5.408	0.030	1.524	0.033	6.063	0.008	38.169	0.020
	30	26.654	0.028	4.133	0.033	0.944	0.040	5.789	0.010	37.520	0.021
	31	29.577	0.029	3.401	0.039	0.700	0.064	5.271	0.013	38.949	0.023
	32	26.228	0.031	2.480	0.042	0.465	0.082	3.924	0.013	33.096	0.025
	33	26.503	0.031	1.819	0.050	0.485	0.272	4.276	0.168	33.083	0.034
	34	23.917	0.024	1.474	0.041	0.310	0.130	3.630	0.164	29.331	0.029
	35	23.877	0.025	1.029	0.052	0.784	0.456	4.531	0.177	30.221	0.035
	36	22.296	0.026	0.778	0.061	1.275	0.441	7.678	0.157	32.028	0.045
	37	20.426	0.028	0.550	0.063	1.043	0.442	9.837	0.164	31.856	0.056
	38	18.628	0.032	0.504	0.075	0.548	0.419	11.635	0.159	31.316	0.062
	39	16.345	0.040	0.335	0.100	0.273	0.431	8.267	0.209	25.220	0.073
sur		829									
	25	15.468	0.024	10.499	0.013	6.444	0.019	2.751	0.007	35.162	0.012
	26	14.694	0.035	8.794	0.020	4.548	0.023	3.592	0.008	31.628	0.017
	27	14.841	0.034	7.712	0.021	3.385	0.025	3.854	0.008	29.792	0.018
	28	16.100	0.033	6.442	0.022	2.656	0.027	3.928	0.008	29.127	0.019
	29	16.779	0.032	5.374	0.025	1.970	0.029	3.868	0.008	27.992	0.020
	30	17.163	0.032	4.721	0.028	1.470	0.034	3.733	0.010	27.086	0.021
	31	17.708	0.032	3.915	0.031	0.999	0.042	3.551	0.013	26.172	0.022
	32	17.717	0.033	3.273	0.034	0.786	0.044	3.163	0.013	24.939	0.024
	33	17.874	0.033	2.725	0.038	0.631	0.062	3.034	0.109	24.265	0.028
	34	16.949	0.024	2.138	0.032	0.454	0.118	2.584	0.128	22.125	0.024
	35	16.114	0.026	1.610	0.038	0.344	0.107	2.852	0.177	20.922	0.032
	36	16.004	0.027	1.137	0.043	0.963	0.451	3.010	0.192	21.113	0.040
	37	15.725	0.028	0.859	0.053	0.227	0.352	4.724	0.172	21.535	0.043
	38	14.252	0.030	0.665	0.059	0.967	0.391	6.426	0.160	22.310	0.053
	39	12.924	0.039	0.566	0.082	0.749	0.520	4.126	0.263	18.365	0.068

BW 15x15 4.0 wt% U235 BPRA curies 331
55,000 MWD/MTU

12.0 YR	12.0 YR	12.0 YR	12.0 YR			side125t				num fuel	24
	u4n5a05m		u4n5a05m		u4p5a05m	u4q5a05m	u4c5a05m				
	neutron		phot (n,p)		phot		cobalt			total	
	value	rel err	value	rel err	value	rel err	value	rel err		value	rel err
tal	112										
sur	1825										
1	4.295	0.195	10.857	0.078	0.366	0.240	29.336	0.024		44.853	0.031
sur	2825										
1	4.489	0.221	9.584	0.061	0.337	0.184	19.114	0.022		33.524	0.037
sur	(1825 2825)										
1	4.420	0.164	10.036	0.049	0.347	0.153	22.742	0.018		37.545	0.026
sur	1826										
1	4.077	0.185	6.316	0.119	1.526	0.549	17.885	0.022		29.804	0.047
sur	2826										
1	4.453	0.231	7.059	0.089	0.849	0.197	14.354	0.019		26.716	0.047
sur	(1826 2826)										
1	4.319	0.166	6.794	0.072	1.090	0.291	15.611	0.016		27.815	0.034
sur	1827										
1	3.560	0.227	7.050	0.117	1.250	0.175	12.597	0.023		24.457	0.050
sur	2827										
1	7.581	0.269	5.098	0.090	1.130	0.091	11.382	0.019		25.191	0.084
sur	(1827 2827)										
1	6.147	0.219	5.795	0.072	1.173	0.089	11.815	0.016		24.929	0.057
sur	1828										
1	11.486	0.349	6.109	0.109	2.498	0.157	7.703	0.030		27.797	0.147
sur	2828										
1	4.284	0.193	5.199	0.097	2.028	0.144	7.310	0.023		18.820	0.055
sur	(1828 2828)										
1	6.860	0.223	5.524	0.073	2.196	0.107	7.451	0.019		22.031	0.073
sur	1829										
1	8.017	0.309	5.765	0.133	2.111	0.159	4.863	0.040		20.755	0.126
sur	2829										
1	6.980	0.217	5.046	0.107	2.490	0.107	4.461	0.030		18.976	0.086
sur	(1829 2829)										
1	7.352	0.179	5.304	0.084	2.354	0.089	4.605	0.025		19.614	0.072

BW 15x15 4.0 wt% U235 BPRA curies 331
55,000 MWD/MTU
12.0 YR 12.0 YR 12.0 YR 12.0 YR side125t num fuel 24

		u4n5a05m neutron value	rel err	u4n5a05m phot (n,p) value	rel err	u4p5a05m phot value	rel err	u4q5a05m u4c5a05m cobalt value	rel err	total value	rel err
tal		122									
sur		825									
	25	23.576	0.035	21.701	0.014	14.222	0.020	4.194	0.010	63.693	0.014
	26	12.454	0.054	15.003	0.020	5.481	0.026	15.760	0.009	48.698	0.016
	27	8.945	0.062	11.773	0.020	2.078	0.030	20.265	0.008	43.061	0.014
	28	6.233	0.056	9.510	0.025	0.721	0.046	15.779	0.008	32.244	0.014
	29	5.369	0.065	7.702	0.022	0.254	0.074	11.508	0.010	24.834	0.016
	30	1.870	0.110	5.943	0.025	0.132	0.100	8.553	0.013	16.498	0.017
	31	3.216	0.093	3.113	0.044	0.193	0.369	2.283	0.031	8.806	0.039
	32	29.058	0.041	1.944	0.064	0.476	0.551	5.180	0.260	36.659	0.050
	33	41.968	0.033	1.228	0.076	0.932	0.630	9.605	0.212	53.733	0.047
	34	48.455	0.024	0.864	0.071	4.046	0.395	29.532	0.121	82.897	0.049
	35	46.163	0.026	0.700	0.085	2.065	0.355	28.038	0.131	76.966	0.051
	36	39.191	0.031	0.529	0.107	8.193	0.375	26.016	0.150	73.929	0.069
	37	36.750	0.034	0.476	0.144	4.741	0.411	27.893	0.169	69.859	0.075
	38	30.655	0.041	0.350	0.124	3.048	0.352	32.406	0.170	66.459	0.087
	39	25.566	0.052	0.299	0.168	7.698	0.440	26.567	0.241	60.130	0.123
sur		826									
	25	20.035	0.032	18.044	0.013	11.392	0.019	4.644	0.008	54.115	0.013
	26	11.173	0.048	12.713	0.020	5.348	0.023	11.334	0.008	40.568	0.015
	27	8.327	0.058	9.413	0.021	2.849	0.031	13.493	0.007	34.081	0.016
	28	7.184	0.117	8.073	0.024	1.227	0.041	11.905	0.007	28.389	0.031
	29	3.968	0.062	6.153	0.026	0.596	0.078	8.850	0.008	19.566	0.016
	30	2.549	0.113	4.488	0.030	0.280	0.128	6.652	0.011	13.969	0.024
	31	2.531	0.131	2.851	0.036	0.207	0.236	3.401	0.019	8.990	0.040
	32	13.689	0.060	2.083	0.052	0.360	0.653	4.160	0.272	20.292	0.070
	33	23.039	0.039	1.363	0.065	0.247	0.284	4.935	0.246	29.584	0.051
	34	33.733	0.024	1.024	0.053	2.403	0.397	10.789	0.158	47.948	0.044
	35	35.371	0.027	0.688	0.076	2.025	0.420	19.804	0.140	57.888	0.053
	36	32.787	0.029	0.552	0.084	1.062	0.367	21.214	0.132	55.615	0.054
	37	28.473	0.032	0.419	0.092	4.098	0.404	17.880	0.166	50.870	0.069
	38	26.482	0.036	0.312	0.102	2.097	0.369	17.203	0.177	46.095	0.071
	39	24.146	0.048	0.374	0.134	6.659	0.494	24.937	0.187	56.116	0.104
sur		827									
	25	18.477	0.029	16.028	0.013	9.874	0.018	4.537	0.007	48.916	0.012
	26	12.521	0.048	11.910	0.020	5.201	0.023	8.630	0.007	38.263	0.017
	27	8.549	0.057	9.341	0.021	3.047	0.025	9.854	0.007	30.791	0.017
	28	6.920	0.063	7.330	0.024	1.654	0.031	9.230	0.007	25.134	0.019
	29	4.136	0.067	5.660	0.026	0.951	0.043	7.307	0.008	18.054	0.018
	30	2.867	0.103	4.544	0.032	0.527	0.076	5.433	0.010	13.371	0.025
	31	2.239	0.110	3.265	0.038	0.422	0.123	3.710	0.016	9.636	0.030
	32	7.891	0.058	2.356	0.044	0.249	0.168	3.575	0.236	14.070	0.069
	33	14.762	0.043	1.979	0.057	0.384	0.460	2.612	0.254	19.736	0.048
	34	23.014	0.028	1.140	0.043	0.433	0.460	6.060	0.165	30.646	0.040

BW 15x15 4.0 wt% U235 BPRA curies 331
55,000 MWD/MTU

12.0 YR	12.0 YR	12.0 YR	12.0 YR			side125t			num fuel	24
	u4n5a05m		u4n5a05m		u4p5a05m	u4q5a05m	u4c5a05m			
	neutron		phot (n,p)		phot		cobalt		total	
	value	rel err	value	rel err	value	rel err	value	rel err	value	rel err
35	26.701	0.026	0.830	0.061	2.113	0.398	12.299	0.142	41.943	0.049
36	28.015	0.029	0.664	0.076	1.880	0.371	17.163	0.147	47.722	0.057
37	23.656	0.031	0.399	0.077	0.417	0.388	13.032	0.156	37.504	0.058
38	22.715	0.034	0.426	0.098	3.277	0.420	13.489	0.186	39.907	0.074
39	20.116	0.045	0.371	0.135	1.608	0.413	13.820	0.208	35.915	0.086
sur	828									
25	16.032	0.027	13.268	0.012	7.887	0.018	3.727	0.007	40.914	0.012
26	11.347	0.043	10.187	0.019	4.923	0.023	5.455	0.008	31.912	0.017
27	9.207	0.047	8.835	0.021	3.517	0.025	6.018	0.007	27.577	0.017
28	7.023	0.059	7.123	0.023	2.255	0.028	5.763	0.007	22.164	0.021
29	5.487	0.061	6.007	0.028	1.517	0.033	5.058	0.008	18.068	0.021
30	4.216	0.066	4.758	0.030	0.925	0.040	4.063	0.009	13.963	0.023
31	3.624	0.095	3.968	0.034	0.675	0.065	3.170	0.014	11.437	0.033
32	4.739	0.074	2.959	0.036	0.441	0.085	2.293	0.014	10.431	0.036
33	7.946	0.055	2.310	0.042	0.469	0.282	3.167	0.227	13.892	0.062
34	11.862	0.032	1.782	0.036	0.312	0.113	3.082	0.195	17.039	0.042
35	16.138	0.029	1.207	0.045	0.801	0.448	4.423	0.187	22.570	0.045
36	18.253	0.028	0.844	0.056	1.284	0.438	7.595	0.159	27.976	0.051
37	18.162	0.030	0.588	0.060	1.124	0.437	9.555	0.168	29.430	0.060
38	16.165	0.033	0.571	0.070	0.545	0.421	11.452	0.161	28.733	0.067
39	15.447	0.041	0.388	0.090	0.289	0.402	8.250	0.209	24.374	0.076
sur	829									
25	12.971	0.026	10.649	0.013	6.444	0.019	2.717	0.007	32.782	0.012
26	10.069	0.041	9.000	0.020	4.547	0.023	3.462	0.008	27.078	0.017
27	8.189	0.044	7.948	0.021	3.380	0.025	3.635	0.008	23.153	0.018
28	7.092	0.048	6.777	0.021	2.651	0.027	3.567	0.008	20.087	0.019
29	5.933	0.053	5.703	0.024	1.959	0.029	3.328	0.008	16.923	0.020
30	4.899	0.058	5.067	0.027	1.463	0.034	2.907	0.009	14.335	0.022
31	3.938	0.068	4.266	0.029	0.989	0.042	2.437	0.014	11.630	0.026
32	4.044	0.066	3.579	0.032	0.777	0.046	1.968	0.013	10.368	0.028
33	5.537	0.059	2.985	0.035	0.610	0.060	2.003	0.165	11.135	0.043
34	7.012	0.036	2.372	0.029	0.451	0.119	1.908	0.173	11.744	0.036
35	9.226	0.034	1.792	0.035	0.325	0.089	2.646	0.195	13.989	0.043
36	10.698	0.031	1.258	0.040	0.963	0.452	2.814	0.211	15.733	0.051
37	12.264	0.031	0.944	0.051	0.342	0.328	4.666	0.175	18.215	0.050
38	11.897	0.032	0.711	0.055	0.977	0.387	6.396	0.162	19.981	0.058
39	11.313	0.041	0.601	0.077	0.716	0.542	3.900	0.274	16.530	0.074

BW 15x15 4.0 wt% U235 BPRA curies 331.000
55,000 MWD/MTU

12.0 YR	12.0 YR	12.0 YR	12.0 YR			side125t				num fuel	24
	u4n5c04m		u4n5c04m		u4p5c04m	u4q5c04m	u4c5c04m				
	neutron		phot (n,p)		phot		cobalt			total	
	value	rel err	value	rel err	value	rel err	value	rel err		value	rel err
sur	817										
1	867.629	0.013	1.459	0.088	2.503	0.059	45.722	0.009		917.313	0.013
sur	832										
1	342.970	0.017	0.633	0.104	0.418	0.095	25.349	0.011		369.371	0.016
sur	813										
1	143.549	0.048	0.419	0.143	0.188	0.214	2.871	0.041		147.027	0.047
tal	112										
sur	830										
1	490.507	0.067	1.327	0.490	0.868	0.241	85.329	0.026		578.030	0.057
sur	831										
1	561.623	0.053	0.686	0.250	0.881	0.190	49.281	0.022		612.470	0.049
sur	(830 831)										
1	536.045	0.043	0.916	0.282	0.876	0.151	62.246	0.018		600.084	0.038
sur	1825										
1	340.905	0.065	0.401	0.446	0.574	0.252	47.998	0.023		389.879	0.057
sur	2825										
1	333.277	0.046	0.727	0.348	0.654	0.163	33.306	0.020		367.964	0.042
sur	(1825 2825)										
1	335.985	0.038	0.611	0.286	0.625	0.139	38.521	0.017		375.743	0.034
sur	1826										
1	285.568	0.061	0.875	0.626	1.427	0.113	31.296	0.022		319.166	0.055
sur	2826										
1	311.058	0.046	0.547	0.316	1.248	0.100	25.914	0.018		338.766	0.043
sur	(1826 2826)										
1	301.981	0.037	0.664	0.338	1.312	0.079	27.830	0.016		331.786	0.034
sur	1827										
1	317.074	0.069	0.101	0.347	1.786	0.133	23.048	0.023		342.009	0.064
sur	2827										
1	329.127	0.054	0.406	0.308	2.395	0.109	20.605	0.018		352.533	0.050
sur	(1827 2827)										
1	324.829	0.043	0.297	0.274	2.178	0.088	21.477	0.016		348.781	0.040
sur	1828										
1	311.600	0.072	0.323	0.329	3.096	0.127	14.569	0.027		329.589	0.068
sur	2828										
1	326.363	0.053	0.864	0.463	3.239	0.087	13.179	0.021		343.645	0.050
sur	(1828 2828)										
1	321.082	0.043	0.671	0.387	3.188	0.072	13.677	0.018		338.617	0.041
sur	1829										
1	312.511	0.075	0.464	0.327	3.982	0.131	9.442	0.035		326.398	0.072
sur	2829										
1	320.515	0.055	0.369	0.407	4.653	0.105	8.635	0.028		334.172	0.053
sur	(1829 2829)										
1	317.646	0.045	0.403	0.275	4.413	0.087	8.924	0.023		331.386	0.043

BW 15x15 4.0 wt% U235 BPRA curies 331.000
55,000 MWD/MTU

12.0 YR	12.0 YR	12.0 YR	12.0 YR			side125t			num fuel	24
	u4n5c04m		u4n5c04m		u4p5c04m	u4q5c04m	u4c5c04m			
	neutron		phot (n,p)		phot		cobalt		total	
	value	rel err	value	rel err	value	rel err	value	rel err	value	rel err
tal	122									
sur	825									
1	83.807	0.030	0.089	0.272	0.186	0.700	13.752	0.374	97.835	0.059
2	98.282	0.027	0.062	0.187	0.217	0.492	15.905	0.271	114.466	0.044
3	121.578	0.024	0.133	0.197	0.287	0.405	16.721	0.265	138.718	0.038
4	140.905	0.021	0.157	0.148	0.389	0.342	26.008	0.244	167.459	0.042
5	172.348	0.022	0.208	0.136	2.214	0.445	12.189	0.253	186.959	0.027
6	189.151	0.024	0.238	0.183	2.271	0.618	11.173	0.215	202.833	0.026
7	192.022	0.047	0.253	0.190	0.424	0.185	6.426	0.275	199.125	0.046
8	216.264	0.035	0.300	0.147	0.476	0.121	4.616	0.073	221.657	0.034
9	394.623	0.018	0.615	0.109	1.014	0.051	15.459	0.010	411.711	0.017
10	647.462	0.013	0.915	0.091	2.162	0.036	31.946	0.008	682.486	0.013
11	957.453	0.012	1.165	0.069	8.460	0.027	35.031	0.008	1002.108	0.011
12	1348.924	0.011	1.558	0.067	19.551	0.022	27.322	0.008	1397.355	0.011
13	1768.039	0.010	1.816	0.065	32.655	0.022	8.806	0.010	1811.317	0.010
14	2251.453	0.009	2.593	0.058	42.765	0.025	1.888	0.018	2298.699	0.009
15	2682.590	0.009	2.664	0.052	48.089	0.028	0.397	0.037	2733.739	0.008
16	3170.748	0.006	3.224	0.035	47.459	0.026	0.056	0.055	3221.487	0.006
17	3532.658	0.006	3.754	0.031	49.317	0.027	0.012	0.091	3585.741	0.006
18	3682.792	0.005	3.813	0.033	50.696	0.027	0.007	0.142	3737.308	0.005
19	3657.727	0.005	3.806	0.033	49.546	0.027	0.007	0.204	3711.086	0.005
20	3551.129	0.005	3.832	0.034	48.874	0.027	0.005	0.147	3603.841	0.005
21	3375.417	0.006	3.310	0.033	47.993	0.027	0.005	0.131	3426.726	0.005
22	3085.909	0.006	3.315	0.035	49.302	0.028	0.008	0.105	3138.534	0.006
23	2622.934	0.006	2.802	0.036	47.954	0.027	0.031	0.061	2673.720	0.006
24	1935.243	0.007	2.218	0.041	41.380	0.021	0.419	0.023	1979.260	0.006
25	1226.383	0.008	1.469	0.045	26.073	0.019	8.240	0.009	1262.165	0.008
26	775.411	0.012	0.896	0.069	10.414	0.027	28.606	0.008	815.327	0.011
27	603.349	0.013	0.873	0.082	4.289	0.028	36.499	0.007	645.010	0.012
28	439.422	0.013	0.681	0.079	1.480	0.040	28.619	0.007	470.202	0.012
29	306.113	0.017	0.491	0.111	0.486	0.056	20.137	0.009	327.228	0.016
30	227.405	0.024	0.337	0.119	0.377	0.098	15.485	0.012	243.604	0.023
31	134.106	0.035	0.305	0.120	0.706	0.321	5.514	0.048	140.630	0.033
32	89.551	0.047	0.359	0.121	0.475	0.482	3.281	0.124	93.666	0.045
33	71.087	0.067	0.393	0.167	0.566	0.671	3.448	0.171	75.494	0.064
34	42.992	0.063	0.400	0.094	2.929	0.646	5.026	0.187	51.347	0.067
35	32.836	0.075	0.317	0.087	1.563	0.600	7.111	0.229	41.827	0.074
36	23.707	0.074	0.249	0.094	0.435	0.739	3.463	0.316	27.854	0.075
37	21.207	0.090	0.301	0.107	0.641	0.634	7.402	0.284	29.552	0.097
38	14.514	0.084	0.203	0.125	0.012	0.442	4.047	0.448	18.776	0.116
39	14.579	0.108	0.184	0.158	0.013	0.577	5.123	0.508	19.899	0.153
sur	826									
1	84.985	0.041	0.073	0.274	0.242	0.449	11.742	0.325	97.042	0.053
2	101.055	0.029	0.083	0.162	0.259	0.384	23.467	0.235	124.863	0.050

BW 15x15 4.0 wt% U235 BPRA curies 331.000
55,000 MWD/MTU

12.0 YR	12.0 YR	12.0 YR	12.0 YR				side125t		num fuel	24
	u4n5c04m		u4n5c04m		u4p5c04m	u4q5c04m	u4c5c04m			
	neutron		phot (n,p)		phot		cobalt		total	
	value	rel err	value	rel err	value	rel err	value	rel err	value	rel err
3	113.119	0.023	0.115	0.173	0.492	0.323	12.041	0.291	125.768	0.035
4	137.145	0.020	0.137	0.138	0.773	0.386	10.577	0.270	148.632	0.026
5	154.961	0.018	0.223	0.159	2.946	0.493	7.235	0.265	165.364	0.023
6	175.424	0.017	0.240	0.106	0.490	0.101	6.267	0.217	182.421	0.018
7	203.552	0.027	0.247	0.172	0.496	0.092	4.381	0.260	208.676	0.027
8	253.572	0.019	0.294	0.118	0.780	0.064	6.235	0.048	260.881	0.018
9	386.461	0.014	0.433	0.093	1.652	0.037	14.211	0.009	402.757	0.014
10	573.860	0.012	0.795	0.102	3.631	0.026	21.344	0.008	599.629	0.012
11	806.812	0.011	0.903	0.070	9.137	0.023	24.094	0.008	840.946	0.010
12	1089.374	0.009	1.234	0.076	16.785	0.020	19.918	0.008	1127.311	0.009
13	1363.663	0.009	1.451	0.069	26.493	0.021	10.055	0.008	1401.663	0.008
14	1689.015	0.008	1.677	0.055	32.927	0.022	3.892	0.010	1727.512	0.008
15	1967.214	0.007	1.863	0.052	38.842	0.024	1.397	0.014	2009.316	0.007
16	2318.841	0.005	2.295	0.033	38.995	0.022	0.387	0.018	2360.517	0.005
17	2594.927	0.005	2.501	0.032	41.122	0.024	0.103	0.036	2638.654	0.005
18	2748.668	0.005	2.719	0.031	41.871	0.023	0.043	0.065	2793.300	0.005
19	2730.403	0.005	2.749	0.031	41.799	0.024	0.037	0.085	2774.988	0.005
20	2667.576	0.005	2.663	0.032	40.884	0.023	0.039	0.087	2711.162	0.005
21	2530.089	0.005	2.539	0.034	39.903	0.024	0.040	0.073	2572.571	0.005
22	2288.918	0.005	2.216	0.035	41.355	0.024	0.073	0.044	2332.562	0.005
23	1948.973	0.005	1.981	0.035	38.795	0.023	0.234	0.020	1989.983	0.005
24	1481.616	0.006	1.650	0.041	33.114	0.019	1.373	0.011	1517.752	0.006
25	980.019	0.007	1.106	0.050	21.216	0.018	8.873	0.007	1011.215	0.007
26	676.885	0.010	0.764	0.073	10.551	0.023	20.560	0.007	708.759	0.010
27	516.359	0.012	0.594	0.078	5.223	0.024	24.157	0.007	546.333	0.011
28	390.182	0.013	0.510	0.085	2.423	0.028	21.495	0.007	414.610	0.012
29	285.899	0.015	0.389	0.119	1.150	0.054	16.038	0.008	303.476	0.014
30	210.858	0.018	0.295	0.121	0.653	0.085	12.671	0.012	224.476	0.017
31	146.625	0.023	0.272	0.128	0.550	0.213	7.240	0.031	154.686	0.021
32	104.316	0.028	0.284	0.140	0.654	0.327	3.396	0.049	108.651	0.027
33	70.996	0.036	0.246	0.103	0.478	0.681	3.178	0.138	74.898	0.035
34	53.424	0.032	0.280	0.086	0.274	0.384	3.002	0.165	56.980	0.031
35	39.464	0.043	0.268	0.088	2.264	0.653	3.749	0.236	45.746	0.053
36	28.869	0.048	0.238	0.097	1.183	0.677	6.235	0.230	36.525	0.059
37	27.565	0.069	0.214	0.098	0.502	0.635	2.982	0.322	31.263	0.069
38	21.732	0.083	0.190	0.121	0.385	0.557	4.543	0.345	26.849	0.089
39	18.259	0.088	0.199	0.153	0.021	0.312	4.102	0.426	22.582	0.105
sur	827									
1	84.143	0.026	0.077	0.187	0.257	0.360	22.059	0.252	106.536	0.056
2	94.781	0.023	0.127	0.180	0.425	0.323	10.557	0.287	105.889	0.035
3	109.165	0.020	0.135	0.192	0.652	0.396	8.125	0.297	118.077	0.028
4	125.824	0.018	0.133	0.123	2.523	0.510	6.620	0.295	135.100	0.024
5	147.740	0.016	0.207	0.115	0.464	0.181	6.382	0.240	154.794	0.018
6	183.425	0.015	0.247	0.109	0.527	0.056	4.614	0.211	188.813	0.015

BW 15x15 4.0 wt% U235 BPRA curies 331.000
55,000 MWD/MTU

12.0 YR	12.0 YR	12.0 YR	12.0 YR			side125t			num fuel	24
	u4n5c04m		u4n5c04m		u4p5c04m	u4q5c04m	u4c5c04m			
	neutron		phot (n,p)		phot		cobalt		total	
	value	rel err	value	rel err	value	rel err	value	rel err	value	rel err
7	238.481	0.022	0.292	0.179	0.851	0.074	4.591	0.153	244.215	0.021
8	301.173	0.016	0.377	0.140	1.369	0.040	6.361	0.011	309.280	0.016
9	417.377	0.014	0.465	0.120	2.542	0.034	12.201	0.009	432.585	0.013
10	565.605	0.012	0.661	0.096	4.924	0.025	15.632	0.008	586.821	0.011
11	747.031	0.010	0.868	0.075	9.569	0.021	17.622	0.008	775.090	0.010
12	953.500	0.009	0.940	0.068	15.452	0.020	15.506	0.008	985.399	0.009
13	1181.720	0.008	1.080	0.056	22.131	0.021	9.528	0.008	1214.458	0.008
14	1405.268	0.008	1.371	0.054	27.955	0.021	4.851	0.009	1439.446	0.008
15	1616.415	0.007	1.652	0.053	32.417	0.023	2.257	0.011	1652.741	0.007
16	1894.895	0.005	1.879	0.034	33.379	0.021	0.812	0.012	1930.965	0.005
17	2129.764	0.005	2.031	0.033	36.321	0.022	0.243	0.019	2168.359	0.005
18	2270.581	0.005	2.242	0.032	35.872	0.021	0.109	0.029	2308.804	0.005
19	2274.333	0.005	2.320	0.031	36.919	0.022	0.073	0.039	2313.645	0.005
20	2216.069	0.005	2.093	0.032	35.318	0.021	0.072	0.038	2253.552	0.005
21	2109.761	0.005	2.036	0.033	35.295	0.022	0.095	0.030	2147.187	0.005
22	1892.287	0.005	1.871	0.035	35.937	0.022	0.196	0.020	1930.292	0.005
23	1623.163	0.005	1.567	0.037	33.174	0.021	0.538	0.012	1658.442	0.005
24	1254.161	0.006	1.345	0.043	28.004	0.019	2.177	0.008	1285.686	0.006
25	876.093	0.007	1.001	0.048	18.337	0.017	8.489	0.007	903.921	0.006
26	634.365	0.010	0.669	0.074	10.201	0.022	15.662	0.007	660.896	0.010
27	501.651	0.011	0.687	0.087	6.075	0.024	17.712	0.007	526.125	0.011
28	389.258	0.013	0.505	0.106	3.520	0.026	16.655	0.007	409.938	0.012
29	301.402	0.014	0.315	0.098	1.737	0.034	13.421	0.007	316.875	0.013
30	226.035	0.016	0.339	0.111	0.997	0.053	10.437	0.011	237.808	0.016
31	166.542	0.019	0.244	0.113	0.834	0.124	7.550	0.026	175.168	0.018
32	126.486	0.023	0.224	0.129	0.729	0.252	4.089	0.031	131.527	0.022
33	98.704	0.028	0.270	0.122	0.270	0.193	2.661	0.081	101.905	0.027
34	65.845	0.024	0.215	0.079	0.383	0.389	2.233	0.120	68.675	0.024
35	50.470	0.032	0.244	0.091	1.613	0.742	2.830	0.189	55.157	0.038
36	36.043	0.038	0.204	0.094	0.708	0.470	5.239	0.219	42.194	0.043
37	26.623	0.046	0.190	0.105	0.919	0.765	2.376	0.320	30.108	0.053
38	23.519	0.051	0.168	0.122	0.453	0.509	3.901	0.314	28.041	0.062
39	20.265	0.064	0.150	0.139	0.266	0.909	4.076	0.399	24.756	0.085
sur	828									
1	77.111	0.022	0.094	0.143	0.365	0.344	7.960	0.298	85.531	0.034
2	88.569	0.019	0.124	0.148	0.441	0.412	3.426	0.382	92.561	0.023
3	109.028	0.017	0.130	0.120	1.917	0.537	5.672	0.288	116.747	0.023
4	129.927	0.015	0.173	0.151	0.627	0.332	3.540	0.299	134.267	0.017
5	165.150	0.014	0.199	0.113	0.584	0.048	3.819	0.240	169.752	0.015
6	222.988	0.012	0.275	0.099	1.063	0.033	3.381	0.148	227.706	0.012
7	288.251	0.018	0.290	0.129	1.842	0.045	4.352	0.076	294.735	0.018
8	338.540	0.013	0.358	0.100	2.519	0.033	5.861	0.011	347.277	0.013
9	422.602	0.012	0.463	0.087	3.812	0.025	8.466	0.010	435.343	0.012
10	537.212	0.011	0.553	0.077	6.064	0.023	9.565	0.009	553.394	0.010

BW 15x15 4.0 wt% U235 BPRA curies 331.000
55,000 MWD/MTU

12.0 YR	12.0 YR	12.0 YR	12.0 YR			side125t				num fuel	24
	u4n5c04m		u4n5c04m		u4p5c04m	u4q5c04m	u4c5c04m				
	neutron		phot (n,p)		phot		cobalt			total	
	value	rel err	value	rel err	value	rel err	value	rel err		value	rel err
11	659.124	0.010	0.644	0.067	9.341	0.022	10.512	0.008		679.620	0.009
12	786.162	0.009	0.733	0.067	13.355	0.021	9.851	0.008		810.100	0.009
13	920.364	0.008	0.875	0.066	16.924	0.020	7.631	0.008		945.795	0.008
14	1059.911	0.008	1.128	0.056	20.853	0.021	5.130	0.009		1087.023	0.008
15	1204.748	0.007	1.165	0.055	24.039	0.022	3.123	0.009		1233.075	0.007
16	1374.648	0.005	1.344	0.036	26.026	0.019	1.489	0.009		1403.508	0.005
17	1543.740	0.005	1.550	0.035	28.261	0.019	0.586	0.012		1574.137	0.005
18	1635.020	0.005	1.553	0.033	28.897	0.019	0.288	0.015		1665.759	0.005
19	1677.793	0.005	1.599	0.033	28.869	0.019	0.195	0.017		1708.456	0.005
20	1624.618	0.005	1.560	0.034	28.645	0.019	0.187	0.017		1655.009	0.005
21	1545.350	0.005	1.478	0.033	28.125	0.019	0.258	0.014		1575.211	0.005
22	1405.907	0.005	1.311	0.035	28.217	0.020	0.470	0.011		1435.905	0.005
23	1209.520	0.005	1.187	0.036	25.335	0.019	1.104	0.009		1237.146	0.005
24	971.458	0.006	0.966	0.043	21.082	0.018	2.971	0.007		996.476	0.006
25	724.706	0.006	0.798	0.051	14.798	0.017	6.892	0.006		747.194	0.006
26	566.711	0.010	0.605	0.072	9.391	0.022	9.977	0.007		586.685	0.009
27	460.538	0.011	0.583	0.080	6.563	0.023	10.839	0.007		478.524	0.010
28	385.649	0.012	0.404	0.115	4.567	0.028	10.605	0.007		401.225	0.011
29	312.733	0.013	0.437	0.096	2.951	0.028	9.409	0.009		325.530	0.013
30	249.741	0.015	0.321	0.111	1.918	0.033	7.808	0.018		259.787	0.014
31	210.873	0.017	0.300	0.114	1.477	0.064	6.318	0.016		218.968	0.016
32	164.931	0.019	0.257	0.111	1.111	0.136	4.423	0.014		170.721	0.018
33	134.410	0.021	0.284	0.158	0.724	0.078	3.105	0.036		138.524	0.020
34	100.659	0.018	0.201	0.083	0.528	0.229	2.240	0.086		103.628	0.018
35	69.856	0.021	0.199	0.090	0.365	0.182	1.456	0.121		71.876	0.021
36	49.095	0.026	0.157	0.094	1.112	0.817	2.355	0.199		52.719	0.031
37	38.895	0.030	0.152	0.095	0.442	0.465	3.223	0.261		42.712	0.034
38	29.064	0.034	0.152	0.099	0.526	0.482	2.048	0.295		31.789	0.037
39	22.588	0.043	0.137	0.133	0.871	0.887	2.665	0.329		26.259	0.058
sur	829										
1	81.625	0.019	0.084	0.129	1.562	0.612	3.589	0.358		86.860	0.026
2	95.717	0.016	0.128	0.123	0.587	0.281	2.424	0.350		98.857	0.018
3	117.208	0.015	0.174	0.124	0.636	0.264	2.625	0.315		120.643	0.016
4	142.839	0.013	0.133	0.102	0.634	0.042	2.673	0.258		146.280	0.014
5	183.568	0.012	0.197	0.090	0.981	0.032	2.201	0.222		186.947	0.012
6	247.796	0.010	0.271	0.072	1.703	0.026	3.088	0.116		252.858	0.010
7	298.151	0.016	0.281	0.104	2.560	0.037	3.634	0.014		304.626	0.015
8	336.456	0.012	0.411	0.089	3.328	0.026	4.616	0.011		344.812	0.012
9	400.812	0.011	0.442	0.085	4.818	0.026	5.376	0.010		411.448	0.011
10	476.141	0.010	0.497	0.080	6.540	0.024	5.916	0.009		489.095	0.010
11	551.981	0.009	0.549	0.072	8.531	0.022	6.298	0.009		567.358	0.009
12	630.172	0.009	0.621	0.061	10.926	0.022	6.141	0.009		647.859	0.009
13	717.643	0.008	0.718	0.064	13.161	0.021	5.366	0.009		736.888	0.008
14	802.546	0.008	0.770	0.063	15.882	0.022	4.250	0.009		823.448	0.008

BW 15x15 4.0 wt% U235 BPRA curies 331.000
55,000 MWD/MTU

12.0 YR	12.0 YR	12.0 YR	12.0 YR			side125t			num fuel	24
	u4n5c04m		u4n5c04m		u4p5c04m	u4q5c04m	u4c5c04m			
	neutron		phot (n,p)		phot		cobalt		total	
	value	rel err	value	rel err	value	rel err	value	rel err	value	rel err
15	873.008	0.008	0.838	0.057	17.651	0.021	3.153	0.010	894.650	0.007
16	983.499	0.005	0.938	0.037	19.824	0.018	1.927	0.008	1006.188	0.005
17	1085.791	0.005	1.065	0.036	21.436	0.018	0.952	0.010	1109.244	0.005
18	1158.954	0.005	1.127	0.036	22.583	0.018	0.532	0.011	1183.196	0.005
19	1182.655	0.005	1.112	0.036	22.328	0.018	0.376	0.011	1206.471	0.005
20	1166.365	0.005	1.116	0.035	22.406	0.018	0.364	0.011	1190.252	0.005
21	1097.280	0.005	0.987	0.034	22.069	0.018	0.470	0.010	1120.806	0.005
22	1016.376	0.005	0.960	0.037	21.564	0.019	0.779	0.009	1039.679	0.005
23	888.695	0.005	0.886	0.038	19.190	0.018	1.536	0.008	910.307	0.005
24	740.403	0.006	0.689	0.042	15.760	0.017	2.974	0.007	759.826	0.006
25	596.625	0.006	0.619	0.047	11.800	0.017	5.056	0.006	614.100	0.006
26	487.507	0.010	0.530	0.078	8.310	0.021	6.340	0.008	502.686	0.009
27	422.773	0.010	0.463	0.084	6.521	0.023	6.628	0.008	436.386	0.010
28	363.313	0.011	0.465	0.086	4.872	0.024	6.600	0.008	375.250	0.011
29	305.852	0.012	0.341	0.096	3.683	0.028	6.323	0.017	316.199	0.012
30	267.332	0.013	0.252	0.076	2.761	0.031	5.488	0.011	275.833	0.012
31	220.766	0.014	0.299	0.106	2.281	0.048	4.706	0.015	228.051	0.014
32	185.185	0.015	0.262	0.099	1.641	0.051	3.878	0.012	190.967	0.015
33	161.362	0.017	0.205	0.126	1.166	0.042	3.111	0.023	165.844	0.016
34	127.022	0.014	0.231	0.095	0.753	0.040	2.084	0.034	130.090	0.013
35	92.158	0.017	0.202	0.100	0.618	0.161	1.548	0.097	94.525	0.016
36	69.870	0.020	0.165	0.109	0.357	0.065	1.195	0.177	71.586	0.019
37	53.668	0.022	0.120	0.103	0.987	0.718	1.648	0.201	56.423	0.025
38	44.454	0.025	0.149	0.109	0.219	0.170	2.388	0.250	47.210	0.027
39	34.293	0.034	0.132	0.125	0.432	0.439	1.294	0.451	36.151	0.036

BW 15x15 4.0 wt% U235 BPRA curies 331
55,000 MWD/MTU

12.0 YR	12.0 YR	12.0 YR	12.0 YR			side125t				num fuel	24
	u4n5c05m		u4n5c05m		u4p5c05m	u4q5c05m	u4c5c05m				
	neutron		phot (n,p)		phot		cobalt			total	
	value	rel err	value	rel err	value	rel err	value	rel err		value	rel err
sur	832										
1	346.919	0.018	0.594	0.098	0.555	0.114	33.040	0.012		381.108	0.016
sur	813										
1	159.482	0.044	0.330	0.142	0.542	0.196	7.346	0.056		167.700	0.042
tal	112										
sur	830										
1	505.293	0.061	1.681	0.414	25.995	0.178	1774.713	0.041		2307.682	0.034
sur	831										
1	574.821	0.049	0.474	0.277	3.068	0.200	244.391	0.058		822.753	0.039
sur	(830 831)										
1	549.814	0.039	0.908	0.291	11.314	0.163	794.795	0.037		1356.831	0.027
sur	1825										
1	351.069	0.065	0.454	0.365	8.666	0.164	848.086	0.052		1208.275	0.041
sur	2825										
1	334.216	0.045	1.010	0.297	5.481	0.246	269.903	0.052		610.610	0.034
sur	(1825 2825)										
1	340.198	0.037	0.813	0.249	6.611	0.175	475.136	0.042		822.758	0.029
sur	1826										
1	305.552	0.060	1.015	0.553	4.631	0.155	441.180	0.072		752.378	0.049
sur	2826										
1	321.524	0.046	0.420	0.283	5.432	0.227	227.710	0.057		555.085	0.036
sur	(1826 2826)										
1	315.835	0.037	0.632	0.339	5.147	0.174	303.708	0.050		625.322	0.031
sur	1827										
1	327.082	0.068	0.244	0.523	3.670	0.166	271.230	0.092		602.226	0.056
sur	2827										
1	327.118	0.053	0.519	0.266	5.363	0.201	172.444	0.066		505.443	0.041
sur	(1827 2827)										
1	327.107	0.042	0.420	0.237	4.759	0.158	207.689	0.059		539.976	0.034
sur	1828										
1	318.501	0.070	0.435	0.300	3.600	0.114	153.031	0.137		475.568	0.064
sur	2828										
1	318.177	0.054	0.988	0.411	4.162	0.108	101.341	0.085		424.668	0.045
sur	(1828 2828)										
1	318.293	0.043	0.790	0.335	3.961	0.083	119.832	0.080		442.876	0.038
sur	1829										
1	316.329	0.075	0.570	0.314	4.156	0.125	55.661	0.151		376.716	0.067
sur	2829										
1	323.676	0.055	0.398	0.380	4.888	0.101	68.247	0.146		397.209	0.052
sur	(1829 2829)										
1	321.043	0.045	0.460	0.253	4.626	0.084	63.736	0.112		389.864	0.041

BW 15x15 4.0 wt% U235 BPRA curies 331
55,000 MWD/MTU

12.0 YR	12.0 YR	12.0 YR	12.0 YR			side125t				num fuel	24
	u4n5c05m		u4n5c05m		u4p5c05m	u4q5c05m	u4c5c05m				
	neutron		phot (n,p)		phot		cobalt			total	
	value	rel err	value	rel err	value	rel err	value	rel err		value	rel err
tal	122										
sur	825										
25	1223.642	0.008	1.422	0.045	26.075	0.019	8.257	0.009		1259.396	0.008
26	775.642	0.012	0.848	0.070	10.414	0.027	28.675	0.008		815.579	0.011
27	604.138	0.013	0.816	0.081	4.290	0.028	36.804	0.007		646.049	0.012
28	439.695	0.013	0.691	0.077	1.834	0.048	50.668	0.022		492.888	0.012
29	304.335	0.017	0.442	0.116	1.091	0.122	71.420	0.033		377.288	0.015
30	231.012	0.024	0.306	0.122	0.545	0.114	22.714	0.014		254.577	0.022
31	135.417	0.033	0.363	0.119	0.881	0.263	8.369	0.036		145.030	0.031
32	90.776	0.046	0.288	0.111	0.590	0.398	4.717	0.086		96.370	0.044
33	71.654	0.067	0.357	0.182	0.766	0.518	4.325	0.138		77.102	0.063
34	45.167	0.061	0.381	0.079	2.987	0.634	5.568	0.170		54.103	0.064
35	32.381	0.075	0.281	0.088	1.569	0.598	7.447	0.219		41.678	0.074
36	24.158	0.073	0.303	0.171	0.446	0.720	3.774	0.292		28.681	0.074
37	21.431	0.090	0.279	0.111	0.644	0.632	6.538	0.289		28.892	0.095
38	17.152	0.093	0.235	0.124	0.013	0.409	4.415	0.417		21.815	0.112
39	13.818	0.102	0.196	0.157	0.014	0.522	5.124	0.508		19.153	0.154
sur	826										
25	979.898	0.007	1.071	0.050	21.217	0.018	8.943	0.007		1011.129	0.007
26	675.206	0.010	0.760	0.073	10.553	0.023	20.761	0.007		707.280	0.010
27	514.618	0.012	0.603	0.078	5.226	0.024	24.630	0.006		545.077	0.011
28	391.634	0.013	0.528	0.083	2.772	0.032	42.158	0.024		437.093	0.012
29	283.080	0.015	0.379	0.120	1.565	0.075	51.540	0.035		336.565	0.014
30	213.467	0.018	0.236	0.135	0.826	0.083	21.404	0.014		235.933	0.016
31	149.536	0.023	0.280	0.122	0.619	0.191	10.817	0.025		161.253	0.021
32	104.807	0.028	0.307	0.133	0.776	0.280	5.024	0.028		110.915	0.026
33	73.268	0.035	0.241	0.117	0.535	0.611	4.432	0.104		78.476	0.033
34	54.433	0.031	0.246	0.081	0.378	0.310	3.541	0.140		58.598	0.031
35	39.500	0.043	0.277	0.086	2.298	0.644	4.074	0.217		46.148	0.053
36	28.831	0.048	0.204	0.096	1.365	0.600	6.648	0.216		37.049	0.058
37	27.915	0.068	0.207	0.102	0.332	0.812	3.085	0.311		31.539	0.068
38	21.435	0.083	0.182	0.124	0.393	0.545	3.961	0.347		25.971	0.087
39	20.053	0.083	0.236	0.153	0.025	0.279	4.174	0.418		24.487	0.098
sur	827										
25	876.692	0.007	0.977	0.048	18.338	0.017	8.597	0.007		904.604	0.006
26	635.750	0.010	0.656	0.073	10.205	0.022	15.909	0.007		662.519	0.010
27	500.508	0.011	0.728	0.084	6.085	0.024	18.597	0.006		525.918	0.011
28	388.890	0.013	0.505	0.106	3.835	0.028	35.796	0.027		429.026	0.012
29	300.472	0.014	0.352	0.094	2.053	0.050	39.552	0.037		342.429	0.013
30	226.520	0.016	0.285	0.123	1.161	0.056	18.802	0.015		246.769	0.015
31	167.795	0.019	0.215	0.118	0.889	0.117	11.647	0.022		180.547	0.018
32	127.740	0.023	0.223	0.122	0.806	0.230	5.986	0.018		134.755	0.022
33	98.265	0.028	0.295	0.118	0.322	0.172	4.022	0.057		102.904	0.027
34	66.038	0.024	0.200	0.082	0.424	0.353	2.961	0.093		69.623	0.023

BW 15x15 4.0 wt% U235 BPRA curies 331
55,000 MWD/MTU

12.0 YR	12.0 YR	12.0 YR	12.0 YR			side125t				num fuel	24
	u4n5c05m		u4n5c05m		u4p5c05m	u4q5c05m	u4c5c05m				
	neutron		phot (n,p)		phot		cobalt			total	
	value	rel err	value	rel err	value	rel err	value	rel err		value	rel err
35	51.548	0.031	0.248	0.087	1.696	0.706	3.166	0.169		56.657	0.037
36	36.267	0.039	0.187	0.094	0.722	0.462	5.595	0.205		42.772	0.043
37	26.888	0.046	0.170	0.107	1.084	0.662	2.628	0.291		30.770	0.053
38	23.470	0.051	0.155	0.125	0.313	0.577	3.999	0.306		27.937	0.062
39	20.083	0.066	0.155	0.139	0.265	0.912	3.248	0.419		23.751	0.080
sur	828										
25	724.261	0.006	0.778	0.052	14.800	0.017	7.046	0.006		746.885	0.006
26	567.659	0.010	0.587	0.070	9.396	0.022	10.386	0.007		588.029	0.009
27	459.968	0.011	0.581	0.080	6.618	0.023	13.975	0.011		481.142	0.010
28	385.979	0.012	0.441	0.108	4.793	0.028	24.833	0.036		416.045	0.011
29	311.588	0.013	0.438	0.095	3.190	0.033	25.229	0.038		340.445	0.012
30	251.575	0.014	0.301	0.116	2.001	0.032	14.690	0.025		268.566	0.014
31	209.512	0.017	0.310	0.112	1.539	0.062	10.323	0.017		221.684	0.016
32	166.970	0.019	0.238	0.115	1.163	0.132	6.764	0.014		175.135	0.018
33	135.598	0.021	0.268	0.163	0.761	0.076	4.580	0.022		141.207	0.020
34	100.534	0.018	0.208	0.082	0.550	0.220	3.143	0.063		104.435	0.018
35	69.648	0.021	0.198	0.090	0.392	0.171	1.938	0.092		72.176	0.021
36	49.570	0.026	0.164	0.092	1.157	0.786	2.643	0.178		53.534	0.031
37	39.552	0.030	0.143	0.096	0.465	0.443	3.419	0.246		43.579	0.033
38	29.388	0.033	0.139	0.103	0.531	0.477	2.260	0.268		32.318	0.036
39	22.945	0.043	0.088	0.147	1.057	0.746	2.746	0.319		26.836	0.057
sur	829										
25	595.224	0.006	0.610	0.047	11.805	0.017	5.282	0.006		612.921	0.006
26	488.724	0.010	0.534	0.077	8.329	0.021	7.373	0.009		504.959	0.009
27	423.068	0.010	0.448	0.084	6.594	0.023	11.066	0.021		441.176	0.010
28	363.906	0.011	0.434	0.087	5.011	0.024	15.662	0.042		385.013	0.011
29	306.110	0.012	0.353	0.094	3.852	0.030	16.020	0.041		326.335	0.011
30	267.189	0.013	0.264	0.078	2.816	0.031	10.891	0.036		281.160	0.012
31	223.609	0.014	0.309	0.103	2.323	0.048	7.975	0.019		234.216	0.013
32	184.447	0.015	0.261	0.100	1.692	0.051	6.133	0.015		192.533	0.015
33	160.825	0.017	0.202	0.127	1.194	0.042	4.624	0.015		166.845	0.016
34	127.219	0.014	0.219	0.099	0.771	0.039	3.077	0.025		131.287	0.013
35	92.186	0.017	0.200	0.099	0.632	0.158	2.142	0.071		95.161	0.016
36	70.487	0.019	0.164	0.109	0.369	0.064	1.562	0.136		72.582	0.019
37	54.037	0.022	0.124	0.098	1.000	0.708	1.885	0.175		57.046	0.025
38	44.016	0.026	0.147	0.114	0.251	0.182	2.544	0.234		46.957	0.027
39	35.238	0.033	0.122	0.129	0.452	0.420	1.414	0.413		37.226	0.035

Surface	cm location	description
884	512.445	top of lid
885	612.445	1 meter from top of lid
897	1.27	bottom of pool lid
898	-98.73	1 meter from bottom of pool lid
900	-5.08	bottom of 2.5 inches holtite placed as temporary shielding on pool lid
898	-105.08	1 meter from temporary shielding

radial segments

segment	start sruface	finish surface	start cm	finish cm	start feet	finish feet
1		550	0	15.24	0	0.5
2	550	551	15.24	30.48	0.5	1
3	551	552	30.48	45.72	1	1.5
4	552	553	45.72	60.96	1.5	2
5	553	554	60.96	76.2	2	2.5
6	554	555	76.2	91.44	2.5	3
7	555	556	91.44	106.68	3	3.5
8	556	end	106.68	118.07	3.5	3.87
9	average over entire		0	118.07	0	3.87

BW 15x15 4.0 wt% U235 BPRA curies 331
55,000 MWD/MTU num assem 24

12.0 YR	12.0 YR ht24n03m neutron value	12.0 YR rel err	12.0 YR ht24n03m phot (n,p) value	rel err	ht24p03m phot value	125t-pool ht24p23m rel err	ht24c03m cobalt value	rel err	total value	rel err
sur	884									
1	261.419	0.030	2.863	0.088	9.875	0.099	115.122	0.044	389.279	0.024
2	251.467	0.020	2.843	0.050	8.720	0.060	107.652	0.027	370.681	0.016
3	81.030	0.025	2.219	0.040	3.031	0.075	35.530	0.031	121.811	0.019
4	5.494	0.050	2.041	0.030	1.119	0.070	14.455	0.032	23.109	0.024
5	4.551	0.048	1.755	0.027	0.969	0.074	10.193	0.032	17.468	0.023
6	3.192	0.039	1.266	0.030	4.851	0.361	7.230	0.058	16.539	0.109
7	21.336	0.026	0.696	0.050	0.730	0.266	1.697	0.074	24.460	0.024
8	42.281	0.026	1.345	0.068	0.258	0.249	0.907	0.146	44.791	0.025
9	37.968	0.014	1.505	0.018	2.223	0.171	15.331	0.017	57.027	0.012
sur	885									
1	27.373	0.066	0.684	0.117	2.702	0.138	27.911	0.077	58.669	0.048
2	25.858	0.044	0.729	0.076	2.743	0.102	25.156	0.045	54.486	0.030
3	21.158	0.036	0.592	0.055	2.287	0.101	21.780	0.040	45.816	0.026
4	18.145	0.034	0.544	0.053	1.518	0.104	16.197	0.037	36.405	0.024
5	15.513	0.033	0.556	0.047	1.321	0.118	11.097	0.035	28.487	0.023
6	12.156	0.034	0.516	0.049	2.010	0.294	7.533	0.036	22.215	0.035
7	10.591	0.034	0.515	0.052	0.847	0.164	6.047	0.038	17.999	0.025
8	9.804	0.042	0.496	0.069	0.608	0.175	4.164	0.047	15.071	0.031
9	14.275	0.018	0.541	0.023	1.411	0.149	10.544	0.019	26.771	0.014
tal	112.000									
sur	897									
1	982.014	0.030	1.249	0.130	12.865	0.204	155.570	0.054	1151.698	0.027
2	905.493	0.019	1.064	0.080	13.843	0.104	179.608	0.030	1100.007	0.017
3	856.787	0.015	1.175	0.072	11.366	0.081	168.916	0.023	1038.244	0.013
4	827.710	0.014	1.063	0.052	9.685	0.067	153.136	0.021	991.593	0.012
5	758.280	0.013	0.892	0.063	10.018	0.068	112.540	0.022	881.730	0.011
6	578.641	0.014	0.784	0.057	7.545	0.108	43.174	0.030	630.144	0.013
7	253.874	0.017	0.566	0.087	2.355	0.123	13.464	0.056	270.260	0.016
8	90.949	0.028	1.435	0.094	0.148	0.461	3.216	0.171	95.748	0.027
9	520.924	0.010	0.959	0.034	6.404	0.038	71.788	0.011	600.076	0.008
sur	898									
1	275.615	0.022	0.496	0.314	5.456	0.125	90.701	0.045	372.268	0.020
2	265.860	0.015	0.288	0.134	6.135	0.091	88.494	0.027	360.777	0.013
3	252.986	0.013	0.254	0.115	6.012	0.068	78.286	0.022	337.537	0.011
4	235.321	0.012	0.207	0.075	5.722	0.063	68.583	0.020	309.833	0.010
5	209.649	0.012	0.245	0.121	4.563	0.063	54.929	0.020	269.386	0.010
6	183.515	0.012	0.169	0.069	3.870	0.063	43.891	0.020	231.445	0.010
7	156.558	0.012	0.253	0.127	3.161	0.072	29.714	0.021	189.687	0.010
8	132.495	0.013	0.281	0.162	2.273	0.076	21.302	0.026	156.352	0.011
9	189.701	0.010	0.242	0.054	4.061	0.037	47.080	0.012	241.085	0.008

BW 15x15 4.0 wt% U235
55,000 MWD/MTU

BPRA curies 331
num assem 24

12.0 YR	12.0 YR u4n5a06m neutron value	12.0 YR rel err	12.0 YR u4n5a06m phot (n,p) value	rel err	bot-trac u4p5a06m phot value	rel err	u4q5a06m cobalt value	rel err	u4c5a06m total value	rel err
sur	884									
1	259.902	0.030	2.896	0.087	9.875	0.099	115.122	0.044	387.794	0.024
2	252.168	0.020	2.848	0.050	8.720	0.060	107.652	0.027	371.388	0.016
3	80.834	0.025	2.205	0.040	3.031	0.075	35.530	0.031	121.600	0.019
4	5.500	0.050	2.043	0.030	1.119	0.070	14.455	0.032	23.118	0.024
5	4.546	0.048	1.768	0.028	0.969	0.074	10.193	0.032	17.477	0.023
6	3.190	0.039	1.267	0.031	4.851	0.361	7.230	0.058	16.538	0.109
7	21.331	0.026	0.714	0.051	0.730	0.266	1.697	0.074	24.473	0.024
8	42.240	0.026	1.334	0.069	0.258	0.249	0.907	0.146	44.739	0.025
9	37.952	0.014	1.510	0.018	2.223	0.171	15.331	0.017	57.016	0.012
sur	885									
1	26.916	0.066	0.690	0.117	2.702	0.138	27.911	0.077	58.219	0.048
2	26.085	0.044	0.742	0.076	2.743	0.102	25.156	0.045	54.727	0.030
3	21.222	0.037	0.601	0.055	2.287	0.101	21.780	0.040	45.889	0.026
4	17.968	0.035	0.540	0.054	1.518	0.104	16.197	0.037	36.223	0.024
5	15.532	0.033	0.559	0.049	1.321	0.118	11.097	0.035	28.509	0.023
6	12.204	0.034	0.516	0.049	2.010	0.294	7.533	0.036	22.263	0.035
7	10.563	0.034	0.521	0.052	0.847	0.164	6.047	0.038	17.978	0.025
8	9.800	0.042	0.507	0.069	0.608	0.175	4.164	0.047	15.078	0.031
9	14.268	0.018	0.546	0.023	1.411	0.149	10.544	0.019	26.769	0.014
tal	112.000									
sur	900									
1	58.504	0.043	11.486	0.038	7.191	0.147	109.963	0.050	187.144	0.033
2	58.130	0.030	11.217	0.018	8.588	0.092	110.307	0.028	188.243	0.019
3	51.561	0.022	10.628	0.015	7.578	0.074	110.122	0.022	179.888	0.015
4	49.583	0.020	10.019	0.013	6.745	0.071	99.140	0.020	165.488	0.013
5	46.576	0.020	8.906	0.012	6.153	0.069	69.299	0.021	130.934	0.013
6	35.161	0.023	6.638	0.012	4.760	0.110	30.578	0.027	77.136	0.016
7	14.244	0.025	3.497	0.018	1.911	0.127	8.202	0.045	27.854	0.021
8	23.876	0.047	1.816	0.059	0.364	0.298	2.787	0.133	28.843	0.041
9	34.854	0.013	6.448	0.009	4.242	0.042	46.361	0.011	91.906	0.008
sur	898									
1	23.204	0.031	2.478	0.032	4.194	0.117	53.156	0.043	83.032	0.030
2	22.641	0.020	2.394	0.020	3.752	0.081	52.011	0.026	80.799	0.018
3	21.024	0.018	2.369	0.018	3.402	0.069	47.166	0.022	73.960	0.015
4	19.301	0.017	2.148	0.015	3.374	0.066	41.110	0.019	65.933	0.014
5	17.068	0.016	1.985	0.015	2.692	0.057	33.510	0.019	55.255	0.013
6	14.268	0.016	1.764	0.015	2.309	0.061	26.620	0.019	44.962	0.013
7	11.675	0.017	1.624	0.022	1.963	0.075	19.280	0.020	34.542	0.013
8	9.458	0.021	1.478	0.027	1.663	0.109	14.384	0.023	26.983	0.016
9	14.960	0.013	1.853	0.011	2.491	0.044	28.928	0.012	48.232	0.009

Appendix K: Occupational Exposures During Loading and Unloading Operations

Pages K-2 through K-4 provide a listing of the loading operations and the occupation exposure as a result of these operations. The dose rate is calculated by multiplying the number of personnel by the dose at the location times the time in the dose field. [

]

In the tables of loading and unloading operations the primary work location is listed. The numbers shown refer to locations in Figure K-1 at the end of this appendix which provides a pictorial representation of the dose locations. The locations shown in the figure are approximate locations. In these tables there are columns indicating cask and MPC conditions during each sequence. An X in the box indicates that the condition is active. An explanation of the conditions can be found at the end of the tables for loading and unloading operations.

Pages K-8 and K-9 provide a listing of the unloading operations and the occupational exposure as a result of the unloading operations. [

]

	Operation	Duration of Operation (hours)	Time in Dose Field (minutes)	Primary Work Location	Cask/Mpc Conditions								Dose At Location (mrem/hr)	Number Of Personnel	Total Dose (mrem)
					F	W1	W2	A	B	T	LI	L2			
1	Insert MPC Into HI-TRAC	2	120	1									0	3	0.0
2	Place HI-TRAC In Cask Washdown Area	2	120	1,3									0	4	0.0
3	Attach Impact Limiter	0.5	10	4									0	2	0.0
4	Fill Annulus	1	60	1				X					0	2	0.0
5	Fill MPC With Water	2	20	1		X		X					0	2	0.0
6	Move HI-TRAC Over The Spent Fuel Pool	2	60	1,3		X		X					2	3	6.0
7	Place HI-TRAC In The Spent Fuel Pool	1.5	60	1		X		X					2	3	6.0
8	Load Fuel Assemblies Into MPC	8	480	FUEL BRIDGE	X	X		X					2	2	32.0
9	Perform Fuel Assembly Identification Check	2	60	FUEL BRIDGE	X	X		X					2	2	4.0
10	Install MPC Lid And Lid Retention System	2	120	FUEL BRIDGE	X	X		X					2	2	8.0
11	Remove HI-TRAC From Spent Fuel Pool and Washdown External Portion	1.5	45	FUEL BRIDGE 1,3,4	X	X		X					23	2	34.5
12	Place HI-TRAC In The Cask Washdown	1	5	3	X	X		X					46	2	7.7
13	Install The Seismic Restraints	0.5	30	1	X	X		X					46	2	46.0
14	Disconnect Lid Retention System And Lift Yoke	1	60	1	X	X		X					24	2	48.0
15	Fill Water Jacket With Water	1	5	1	X	X		X					38	2	6.3
16	Perform Initial Decontamination	2	120	1,2,3,4	X	X		X					23	3	138.0
17	Install Temporary Shield Ring	0.5	15	1	X	X		X		X			39	2	19.5
18	Lower MPC Water Level	0.5	15	1	X		X	X		X			29	2	14.5
19	Install Automated Welding System	1.5	30	1	X		X	X	X	X			29	2	29.0
20	Perform MPC Lid Welding And NDE	12	210	1	X		X	X	X	X			29	1	101.5
21	Hydro Test MPC	1	30	1	X	X		X	X	X			29	2	29.0
22	Perform Leakage Testing	1	30	1	X		X	X	X	X			29	1	14.5
23	Blowdown MPC	3	15	1	X		X	X	X	X			29	2	14.5
24	Perform MPC Moisture Removal	20	60	1	X			X	X	X			29	2	58.0
25	Perform Helium Backfill	3	30	1	X			X	X	X			29	2	29.0
26	Install/Weld Vent And Drain Cover Plates	2	120	1	X			X	X	X			29	2	116.0
27	NDE Vent And Drain Cover Plate Welds	0.5	30	1	X			X	X	X			29	1	14.5
28	Leak Test Cover Plates	0.5	30	1	X			X	X	X			29	1	14.5
29	Install/Weld Closure Ring	2	60	1	X			X	X	X			29	2	58.0
30	NDE Closure Ring Welds	1	60	1	X			X	X	X			29	2	58.0

	Operation	Duration of Operation (hours)	Time in Dose Field (minutes)	Primary Work Location	Cask/Mpc Conditions								Dose At Location (mrem/hr)	Number Of Personnel	Total Dose (mrem)
					F	W1	W2	A	B	T	LI	L2			
31	Remove Automated Welding System	1	15	1	X			X		X			29	2	14.5
32	Drain Annulus	1	5	4	X					X			36	1	3.0
33	Remove Temporary Shield Ring	0.5	15	1	X								39	2	19.5
34	Decontaminate MPC Lid And HI-TRAC	2	120	1,3,4	X								23	3	138.0
35	Install HI-TRAC Top Lid	0.5	30	1	X						X		33	2	33.0
36	Install Lift Cleats	0.5	30	2	X						X		45	2	45.0
37	Remove Impact Limiter	0.5	5	4	X						X		49	2	8.2
38	Raise HI-TRAC And Decontaminate Bottom	2	90	4	X						X		36	2	108.0
39	Remove Seismic Restraints	0.5	30	1	X						X		46	2	46.0
40	Remove HI-TRAC From Cask Washdown Area	1	60	1	X						X		18	2	36.0
41	Install Bottom Shield	1	60	4	X						X		49	2	98.0
42	Place HI-TRAC In Transport Frame	1	45	3 (6 FT BACK)	X						X		23	2	34.5
43	Downend HI-TRAC In Transport Frame	1	10	3 (6 FT BACK)	X						X		23	2	7.7
44	Perform HI-TRAC Surveys	1	30	1,2,3,4	X						X		61	2	61.0
45	Transport HI-TRAC To Cask Transporter	1	60	3 (6 FT BACK)	X						X		23	2	46.0
46	Attach HI-TRAC To The Cask Transporter	0.5	30	3 (6 FT BACK)	X						X		23	2	23.0
47	Transport HI-TRAC To The Cask Transfer Facility	1.5	90	CASK TRANSPORTER	X						X		12	2	36.0
48	Prep HI-STORM For Receiving MPC	3	180	6									0	3	0.0
49	Upend HI-TRAC In The Transport Frame	1.5	30	3 (6 FT BACK)	X						X		23	2	23.0
50	Remove HI-TRAC From The Transport	0.5	30	3 (6 FT BACK)	X						X		23	2	23.0
51	Remove Bottom Shield	0.5	30	4	X						X		49	2	49.0
52	Mate HI-TRAC With HI-STORM	0.5	30	4	X						X		36	2	36.0
53	Secure HI-TRAC To Cask Transporter	1	60	3 (6 FT BACK)	X						X		23	2	46.0
54	Attach MPC Downloader	0.5	15	2	X						X		45	2	22.5
55	Remove HI-TRAC Pool Lid	0.5	30	4	X						X		49	2	49.0
56	Transfer MPC Into HI-STORM	1	60	3 (6 FT BACK)	X						X		23	2	46.0
57	Disconnect MPC Downloader Slings	0.5	30	3	X						X		2	2	2.0
58	Remove HI-TRAC From Mating Device	0.5	30	4	X						X		2	2	2.0
59	Remove MPC Downloader Slings/Cleats	0.5	15	5	X								45	2	22.5
60	Remove Mating Device	0.5	30	6	X								6	2	6.0

	Operation	Duration of Operation (hours)	Time in Dose Field (minutes)	Primary Work Location	Cask/Mpc Conditions								Dose At Location (mrem/hr)	Number Of Personnel	Total Dose (mrem)
					F	W1	W2	A	B	T	LI	L2			
61	Install HI-STORM Lid	1	15	6	X							X	6	2	3.0
62	Raise HI-STORM To Full Up Position	0.5	30	7	X							X	18	2	18.0
63	Attach HI-STORM Lift Bracket	0.5	30	top	X							X	5	2	5.0
64	Transport HI-STORM To ISFSI	1	60	7	X							X	18	2	36.0
65	Attach HI-STORM To ISFSI Pad	1	60	8	X							X	16	2	32.0
66	Perform Post Loading Testing	3	30	6,7,8	X							X	18	2	18.0
						Total Dose Steps 1-24									**617.00**
	total minutes*number men in dose locations		6835			**Total Dose Steps 25-65**									**1486.33**
						Total Dose									**2103.33**
		Cask/MPC Conditions													
		F	Fuel in MPC												
		W1	Water Full in MPC												
		W2	Water Level Lowered in MPC												
		A	Water in Annulus												
		B	Automated Welding System Baseplate Shield Installed												
		T	Temporary Shield Ring Installed												
		L1	HI-TRAC Lid Installed												
		L2	HI-STORM Lid Installed												

THIS PAGE IS PROPRIETARY

THIS PAGE IS PROPRIETARY

THIS PAGE IS PROPRIETARY

	Operation	Duration of Operation (hours)	Time in Dose Field (minutes)	Primary Work Location	Cask/Mpc Conditions								Dose At Location (mrem/hr)	Number Of Personnel	Total Dose (mrem)
					F	W1	W2	A	B	T	LI	L2			
1	Recover HI-STORM From ISFSI Pad	6	360	8	X							X	16	2	192.0
2	Attach HI-STORM Lift Bracket	0.5	30	top	X							X	5	2	5.0
3	Transport HI-STORM To CTF	1	60	7	X							X	18	2	36.0
4	Lower HI-STORM To Full Down Position	0.5	30	7	X							X	18	2	18.0
5	Remove HI-STORM Lid	1	15	6	X							X	6	2	3.0
6	Attach Mating Device	0.5	30	6	X								6	2	6.0
7	Install MPC Downloader Slings/Cleats	0.5	30	5	X								45	2	45.0
8	Install HI-TRAC Into Mating Device	0.5	30	4	X						X		2	2	2.0
9	Attach MPC Downloader	0.5	30	1	X						X		2	2	2.0
10	Secure HI-TRAC To Cask Transporter	1	60	3 (6 FT BACK)	X						X		2	2	4.0
11	Transfer MPC Into HI-TRAC	1	60	3 (6 FT BACK)	X						X		23	2	46.0
12	Install HI-TRAC Pool Lid	0.5	30	4	X						X		49	2	49.0
13	Disconnect MPC Downloader	0.5	15	2	X						X		45	2	22.5
14	Disconnect HI-TRAC From HI-STORM	0.5	30	4	X						X		36	2	36.0
15	Install Bottom Shield	1	60	4	X						X		49	2	98.0
16	Place HI-TRAC In The Transport Frame	1	45	3 (6 FT BACK)	X						X		23	2	34.5
17	Downend HI-TRAC In The Transport Frame	1	10	3 (6 FT BACK)	X						X		23	2	7.7
18	Attach HI-TRAC To The Cask Transporter	0.5	30	3 (6 FT BACK)	X						X		23	2	23.0
19	Transport HI-TRAC To The Fuel Building	1.5	90	CASK TRANSPORTER	X						X		12	2	36.0
20	Transport HI-TRAC Into The Fuel Building	1	60	3 (6 FT BACK)	X						X		23	2	46.0
21	Upend HI-TRAC In Transport Frame	1.5	30	3 (6 FT BACK)	X						X		23	2	23.0
22	Remove HI-TRAC From Transport Frame	1	60	3 (6 FT BACK)	X						X		23	2	46.0
23	Remove Bottom Shield	0.5	30	4	X						X		49	2	49.0
24	Place HI-TRAC In Cask Washdown Area	0.5	5	3	X						X		46	2	7.7
25	Install The Seismic Restraints	0.5	30	1	X						X		46	2	46.0
26	Remove Lift Cleats	0.5	30	2	X						X		45	2	45.0
27	Remove HI-TRAC Top Lid	0.5	30	1	X						X		37	2	37.0
28	Attach Impact Limiter	0.5	10	4	X								49	2	16.3
29	Install Temporary Shield Ring	0.5	15	1	X								39	2	19.5
30	Fill Annulus	1	6	1	X					X			53	2	10.6
31	Install Weld Removal System	1.5	30	1	X			X		X			29	2	29.0

	Operation	Duration of Operation (hours)	Time in Dose Field (minutes)	Primary Work Location	Cask/Mpc Conditions								Dose At Location (mrem/hr)	Number Of Personnel	Total Dose (mrem)
					F	W1	W2	A	B	T	LI	L2			
32	Core Drill Vent And Drain Cover Plates	1	60	1	X			X	X	X			29	2	58.0
33	Perform MPC Gas Sampling	2	10	1	X			X	X	X			29	2	9.7
34	Perform MPC Helium Cooldown	20	60	1	X			X	X	X			29	2	58.0
35	Flood MPC	3	15	1	X		X	X	X	X			29	2	14.5
36	Remove MPC Lid Weld	12	210	1	X		X	X	X	X			29	1	101.5
37	Remove Weld Removal System	1	15	1	X		X	X	X	X			29	2	14.5
38	Remove Temporary Shield Ring	0.5	15	1	X	X		X		X			39	2	19.5
39	Drain Water Jacket	1	5	4	X	X		X					49	2	8.2
40	Install Lid Retention System And Lift Yoke	0.5	20	1	X	X		X					65	2	43.3
41	Remove The Seismic Restraints	0.5	30	1	X	X		X					65	2	65.0
42	Raise HI-TRAC To Spent Fuel Pool Level	1	5	3	X	X		X					61	2	10.2
43	Place HI-TRAC Over Spent Fuel Pool	1.5	60	FUEL BRIDGE 1,3,4	X	X		X					2	2	4.0
44	Place HI-TRAC In Spent Fuel Pool	1.5	45	FUEL BRIDGE	X	X		X					2	2	3.0
45	Remove Lid Retention System Bolts	2	120	FUEL BRIDGE	X	X		X					2	2	8.0
46	Remove MPC Lid	0.5	30	FUEL BRIDGE	X	X		X					2	2	2.0
47	Unload Fuel Assemblies From HI-TRAC	8	480	FUEL BRIDGE	X	X		X					2	2	32.0
48	Remove HI-TRAC From Spent Fuel Pool	1.5	45	1		X		X					2	3	4.5
49	Place HI-TRAC In Cask Washdown Area	1	6	3		X		X					2	2	0.4
50	Drain MPC And HI-TRAC Annulus	6	30	1,4									2	2	2.0
51	Remove MPC From HI-TRAC	2	20	1									2	2	1.3
52	Decontaminate MPC And HI-TRAC	8	240	1,3,4									2	2	16.0
		Cask/MPC Conditions				**Total Dose**									**1516.3**
		F	Fuel in MPC												
		W1	Water Full in MPC												
		W2	Water Level Lowered in MPC												
		A	Water in Annulus												
		B	Automated Welding System Baseplate Shield Installed												
		T	Temporary Shield Ring Installed												
		L1	HI-TRAC Lid Installed		L2		HI-STORM Lid Installed								

THIS PAGE IS PROPRIETARY

THIS PAGE IS PROPRIETARY

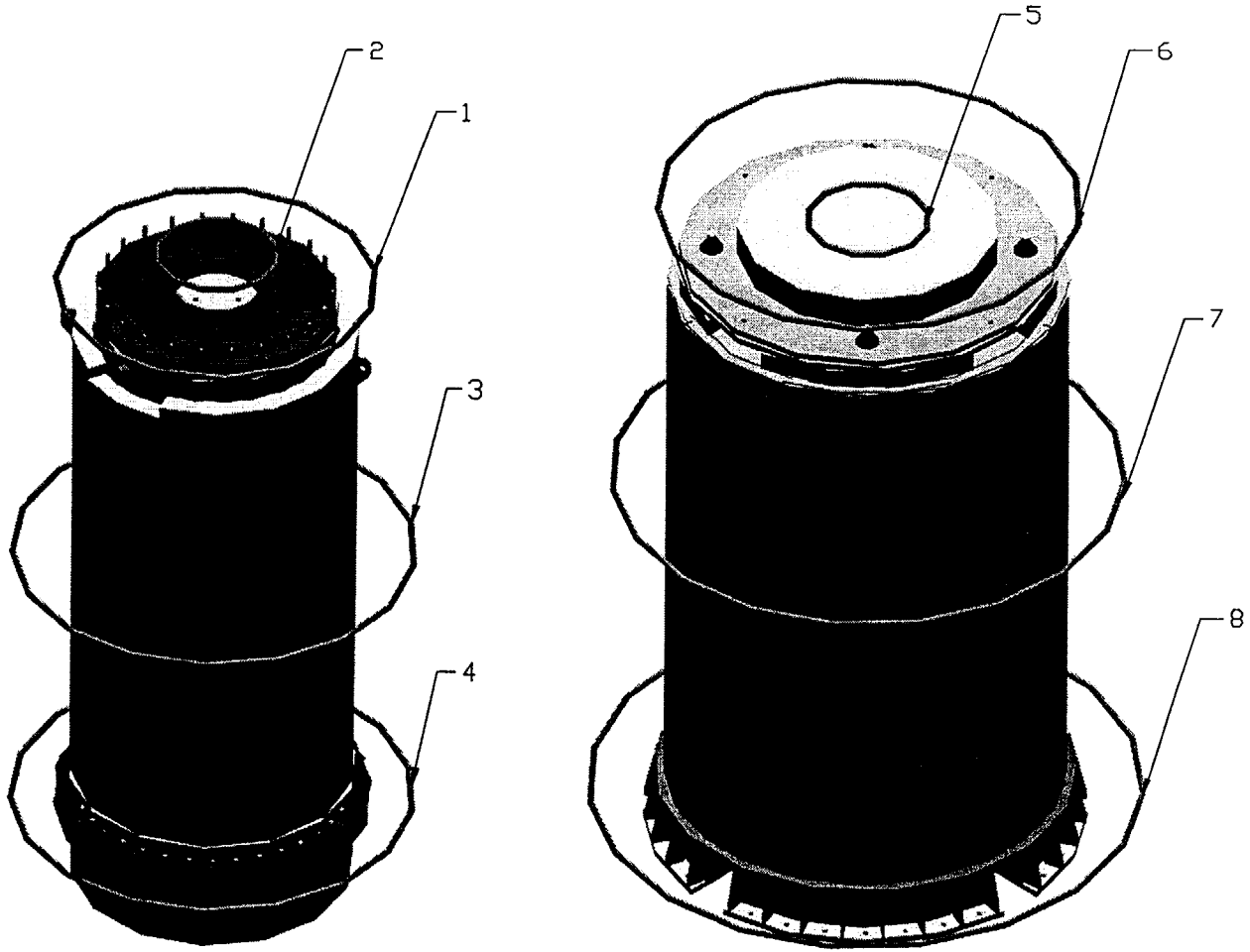

FIGURE K-1: OPERATOR LOCATIONS USED TO ESTABLISH ESTIMATED DOSE RATES

Appendix L: Effect of Air Composition on Dose Calculations

PROPRIETARY

Appendix M: Comparison of B&W 15x15 and W 17x17 Assemblies

PROPRIETARY

Appendix N: Allowable Burnup and Cooling Times for BPRAs and TPDs

PROPRIETARY

Attachment A
List of Approved Computer Codes

PROPRIETARY