Industry and NRC Coordination Meeting on PWR and BWR Materials Issues

Guide Card Wear Programs (PA-MSC-0163/0688)

Jim Cirilli - PWROG MSC Chairman, Exelon Nuclear

May 25-26, 2010

PWR Owners Group
Industry and NRC Coordination Meeting
on PWR and BWR Materials Issues
Project Background

- **What is Guide Card Wear?**
  - ***Guide tubes*** are located in the upper internals assembly, directly above fuel.
  - ***Guide cards*** are housed inside guide tubes, spaced approximately one foot apart vertically.
  - Together the guide tubes and cards provide support and guidance for the fuel assembly rod control cluster assemblies (RCCAs).

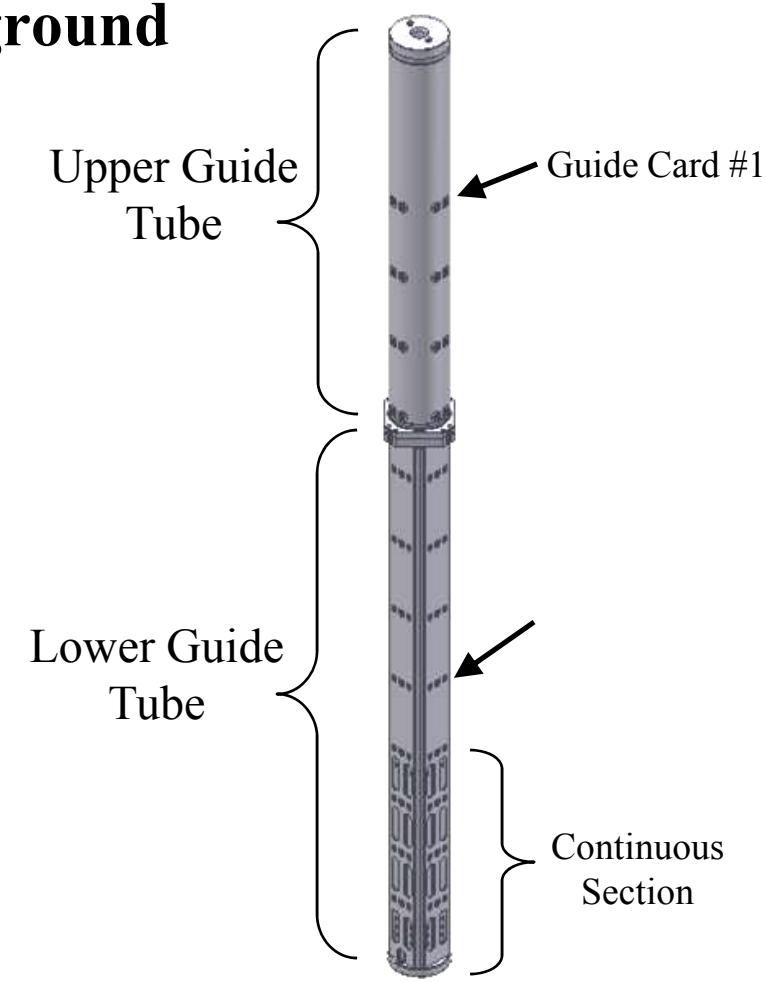

17x17 Guide Tube Assembly
(4-loop, 96" shown)

PWR Owners Group
Industry and NRC Coordination Meeting
on PWR and BWR Materials Issues
Project Background

- **What is Guide Card Wear?**
  - RCCA ***rodlets*** pass through the guide tube guide cards, guided by the small holes that are intersected by slots in the guide cards. The slots allow the RCCA "spider vanes", which hold the individual rodlets as a cluster, to pass through
  - Wear enlarges guidance holes.
  - Need to maintain alignment to meet rod insertability

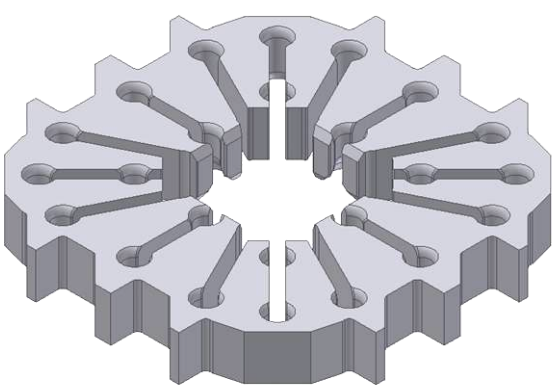

17x17 Guide Card – Isometric view

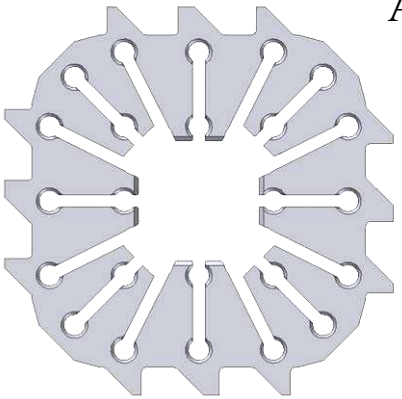

17x17 Guide Card – Plan view

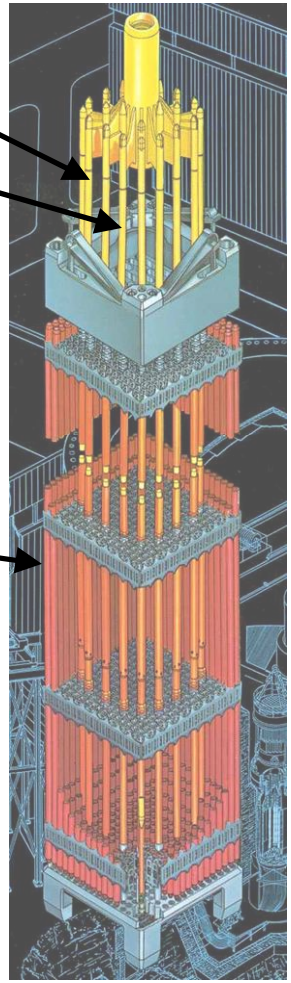

Spider, RCCA, and Fuel Assembly

PWR Owners Group
Industry and NRC Coordination Meeting
on PWR and BWR Materials Issues

Project Background

- **Background – How is Guide Card Wear Measured?**
  - The Westinghouse service consists of a visual (VT-3) inspection and measurement of the RCCA guide tube guide cards intended to meet the EPRI Materials Reliability Program, MRP-227 and MRP-228 documents for Internals Inspection & Examination Guidelines and Inspection Standard for PWR Internals.
  - This guide card wear measurement (GCWM) tool remotely captures video and still images of selected holes and ligaments of a control rod guide card by using a boroscope probe with integral lighting and auxiliary back lighting. The captured images/video are stored and later analyzed in order to quantify the wear.

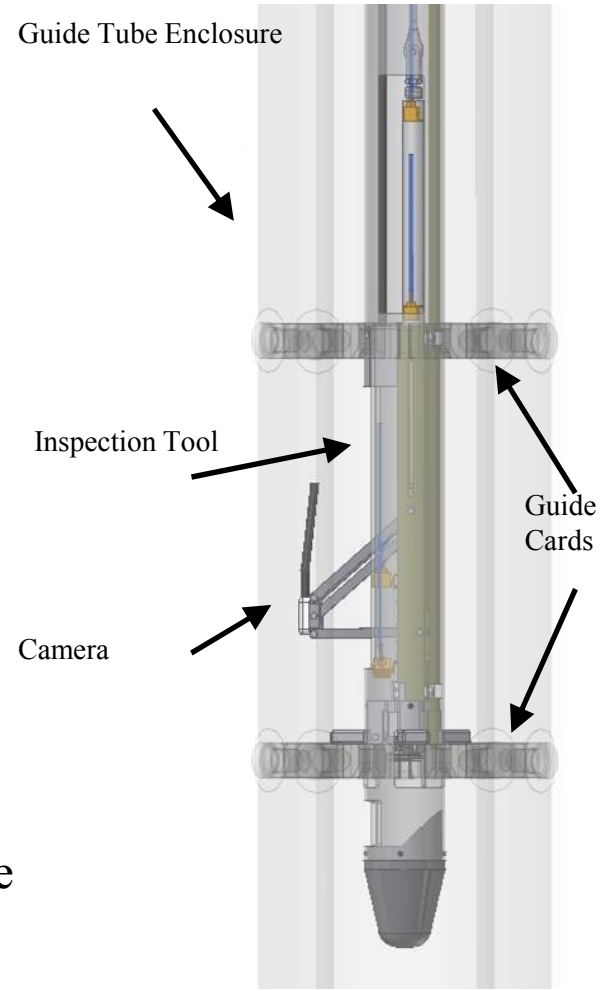

PWR Owners Group
Industry and NRC Coordination Meeting
on PWR and BWR Materials Issues
Project Background

- **Background – Consequences**
  - The flow turbulence on the rodlets can cause the card wear near the rodlet holes (where the wear occurs).
  - After some amount of wear the scram time of a control rod could suddenly increase without warning due to sudden jamming or buckling of an unsupported rodlet along more than one consecutively worn-through guide card holes.
  - Although the probability of this occurrence is low, the prevention of a scram of a control rod due to unsupported jamming or buckling is critical.
  - Potential actions to address the guide card wear issue:
    - Switch guide tube with a spare (part length).
    - Guide tube replacement.

PWR Owners Group
Industry and NRC Coordination Meeting
on PWR and BWR Materials Issues

Guide Card Wear Program Objectives

- **PWROG Programs:**
  - Perform upper internals guide tube card wear measurements on a sample of guide tubes from selected representative pilot plants.
  - Approximate the remaining life of the guide tube based on inspection data of the most limiting guide card hole and assumed or measured rodlet wear.
  - Fleet-wide recommendations for initial guide tube wear inspections and operational projections currently in development
- **Westinghouse Supported:**
  - Inspection tool development and acceptance criteria for guide card wear
  - Evaluation of safety significance – issued NSAL-10-1

PWR Owners Group
Industry and NRC Coordination Meeting
on PWR and BWR Materials Issues

Guide Card Wear Program Objectives

- **PWROG Programs:**
  - Upper internals guide card wear measurements completed

Guide Tube Style	Outage
14x14	October 2008
17x17	February 2009
15x15*	April 2010

* Comparison to guide card wear measured in 1990 will support evaluation of possible wear rate attenuation based on the two measurements.

PWR Owners Group
Industry and NRC Coordination Meeting
on PWR and BWR Materials Issues

Guide Card Wear Program Deliverables

- **Recently Completed Activities:**
  - Completed GCWM at the 15x15 plant.
- **Planned Activities:**
  - Complete final report for 15x15 plant (July-August 2010)
  - Complete development of guide tube operational projection curves (December 2010)
  - Complete development of domestic fleet-wide initial inspection schedule (September 2011)

PWR Owners Group
Industry and NRC Coordination Meeting
on PWR and BWR Materials Issues

Guide Card Wear Program Deliverables

- **Current Results**
  - The following observations are based on the guide card wear measurements and safety analyses:
    - Guide card wear does not seem to be a function of guide tube core location.
    - The data obtained reaffirms the assumption that the wear is more severe in the lower cards than the upper cards.
    - Correlations of guide card wear to rod drop times and head bypass flow hydraulic forces are weak. Detection by rod drop trends is not reliable.
    - Substantial continuous section wear was not observed at any plants.
    - Substantial wear that would result in RCCA spider vane-slot interference was not observed at any plants.

PWR Owners Group
Industry and NRC Coordination Meeting
on PWR and BWR Materials Issues

Guide Card Wear Program Deliverables

- **Current Results**
  - The following observations are based on the guide card wear measurements and safety analyses (cont.):
    - Safety analyses indicate more than one guide card hole can be completely worn-through and maintain RCCA drop functionality.
    - All plants inspected through GCWM and FME inspection videos showed reasonable wear except one 17x17 international plant with projected operation of 20-25 EFPY. Wear considered anomalous, however root cause is not currently known. Based on constant wear rate, which may attenuate with time and extend operation.
    - For all domestic plants, safe operation of guide tubes is maintained through 40 years, but remedial actions may be required for certain guide tube designs for life extension.