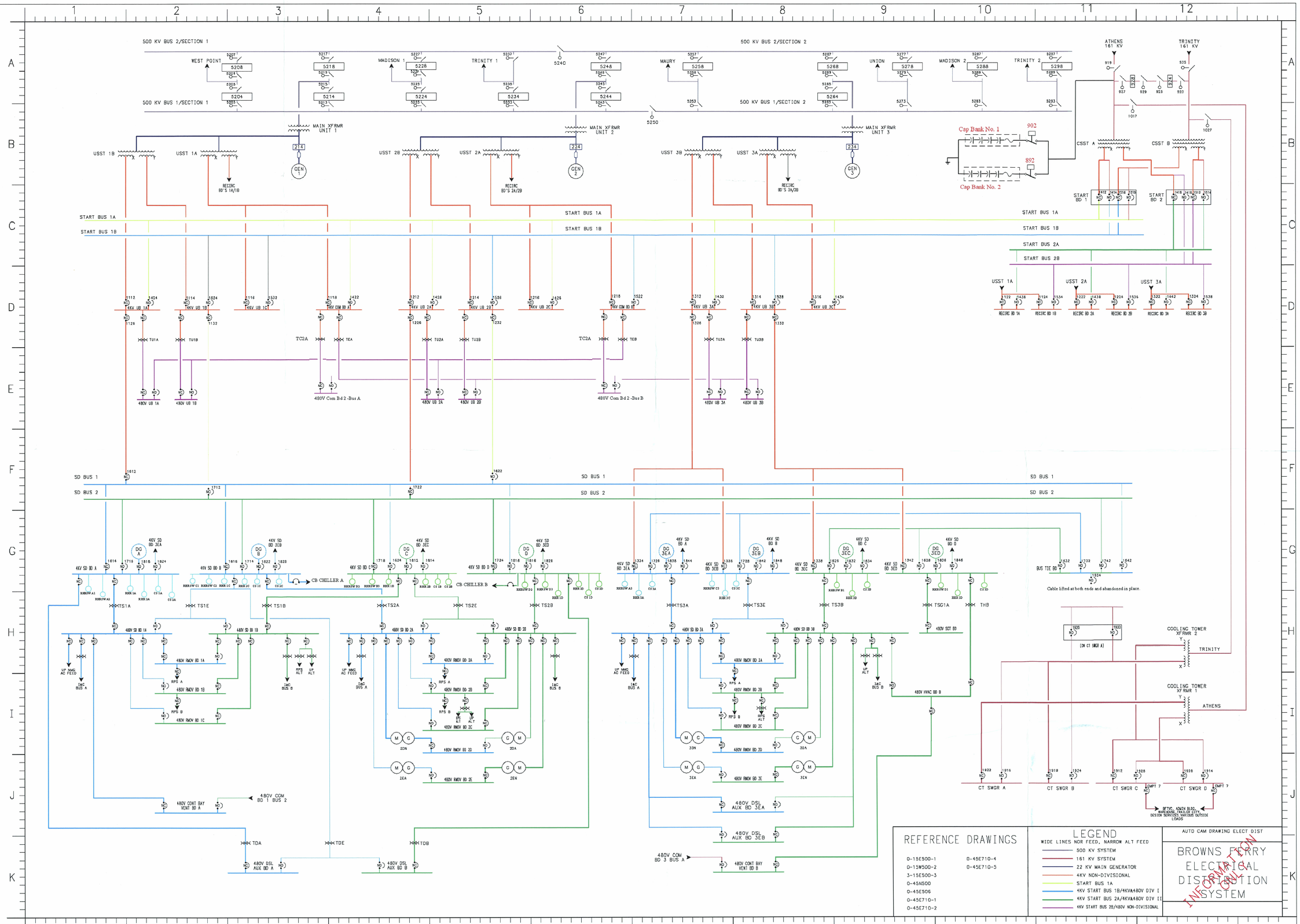
500 KV BUS 2/SECTION 1
500 KV BUS 2/SECTION 2
500 KV BUS 1/SECTION 1
500 KV BUS 1/SECTION 2
WEST POINT
MADISON 1
TRINITY 1
MAURY
UNION
MADISON 2
TRINITY 2
ATHENS 161 KV
TRINITY 161 KV
MAIN XFRMR UNIT 1
MAIN XFRMR UNIT 2
MAIN XFRMR UNIT 3
USST 1B
USST 1A
USST 2B
USST 2A
USST 3B
USST 3A
CSST A
CSST B
Cap Bank No. 1
Cap Bank No. 2
START BUS 1A
START BUS 1B
START BUS 2A
START BUS 2B
SD BUS 1
SD BUS 2
TC2A
480V Com Bd 2 -Bus A
480V Com Bd 2 -Bus B
CB CHILLER A
CB CHILLER B
Cable lifted at both ends and abandonned in place.
COOLING TOWER XFRMR 2
TRINITY
COOLING TOWER XFRMR 1
ATHENS
CT SWGR A
CT SWGR B
CT SWGR C
CT SWGR D
480V CONT BAY VENT BD A
480V COM BD 1 BUS 2
480V DSL AUX BD A
480V DSL AUX BD B
480V COM BD 3 BUS A
480V CONT BAY VENT BD B
REFERENCE DRAWINGS
0-15E500-1
0-15W500-2
3-15E500-3
0-45N500
0-45E506
0-45E710-1
0-45E710-2
0-45E710-4
0-45E710-5
LEGEND
WIDE LINES NOR FEED, NARROW ALT FEED
500 KV SYSTEM
161 KV SYSTEM
22 KV MAIN GENERATOR
4KV NON-DIVISIONAL
START BUS 1A
4KV START BUS 1B/4KV&480V DIV I
4KV START BUS 2A/4KV&480V DIV II
4KV START BUS 2B/480V NON-DIVISIONAL
AUTO CAM DRAWING ELECT DIST
BROWNS FERRY ELECTRICAL DISTRIBUTION SYSTEM
INFORMATION ONLY
ELECT DIST 9-25-02

D-01X