76. Which one of the following correctly completes the statement below?

Technical Specifications do NOT require the RWCU isolation from the SLC control switch in Mode __(1)__ due to __(2)__.

A.✓ (1) 3
(2) control rods are not able to be withdrawn since the reactor mode switch must be in the shutdown position and a control rod block is applied

B. (1) 3
(2) the operability of each individual control rod scram accumulator is required which will ensure that the control rods can be inserted

C. (1) 5
(2) control rods are not able to be withdrawn since the reactor mode switch must be in the shutdown position and a control rod block is applied

D. (1) 5
(2) the operability of each individual control rod scram accumulator is required which will ensure that the control rods can be inserted

Feedback

K/A: 204000 G2.02.25
Knowledge of the bases in Technical Specifications for limiting conditions for operations and safety limits.
Reactor Water Cleanup System
(CFR: 41.5 / 41.7 / 43.2)
There are no safety limits associated with RWCU system, so question is written directly to the TS.

RO/SRO Rating: 3.2/4.2

Objective:

Reference:

Cog Level: Low

Explanation: Are no safety limits for RWCU. SLC is required in mode 3 (RO knowledge) and the bases for the mode 3 requirement is SRO knowledge.

Distractor Analysis:
Choice A: Correct answer from the bases document.

Choice B: Plausible becasue this is the bases for Mode 4/5 from the bases document.

Choice C:

Choice D: Plausible because the scram accumulators are capable of inserting the control rods with low reactor pressure conditions, but the accumulators are not required to be operable in Mode 3.

SRO Basis: 10 CFR 55.43(b)-2, Facility operating limitations in the TS and their bases.
Knowledge of TS bases that is required to analyze TS required actions and terminology.

Notes

MODE	TITLE	REACTOR MODE SWITCH POSITION	AVERAGE REACTOR COOLANT TEMPERATURE (°F)
1	Power Operation	Run	NA
2	Startup	Refuel[a] or Startup/Hot Standby	NA
3	Hot Shutdown[a]	Shutdown	> 212
4	Cold Shutdown[a]	Shutdown	≤ 212
5	Refueling[b]	Shutdown or Refuel	NA

From Bases 3.3.6.1

One channel of the SLC System Initiation Function is available and required to be OPERABLE only in MODES 1 and 2, since these are the only MODES where the reactor can be critical, and these MODES are consistent with the Applicability for the SLC System (LCO 3.1.7).

From bases 3.1.7

APPLICABILITY

In MODES 1 and 2, shutdown capability is required. In MODES 3 and 4, control rods are not able to be withdrawn since the reactor mode switch is in the shutdown position and a control rod block is applied. This provides adequate controls to ensure that the reactor remains subcritical. In MODE 5, only a single control rod can be withdrawn from a core cell containing fuel assemblies. Determination of adequate SDM (LCO 3.1.1, "SHUTDOWN MARGIN (SDM)") ensures that the reactor will not become critical with the analytically determined strongest control rod withdrawn. Therefore, the SLC System is not required to be OPERABLE when only a single control rod can be withdrawn.

Categories

K/A:	204000 G2.02.25	Tier / Group:	T2G2
RO Rating:	3.2	SRO Rating:	4.2
LP Obj:	05-11	Source:	NEW
Cog Level:	LOW	Category 8:	

77. Unit One is operating at full power when the following plant conditions occur:

- Load Reject Signal received
- Line 31 (Whiteville Line) PCBs red lights are lit
- Line 31 (Whiteville Line) white VOLT lights are not lit
- All other line PCBs green lights are lit
- *230 KV BUS 1A BUS POT UNDERVOLTAGE* is in alarm
- *230 KV BUS 1B BUS POT UNDERVOLTAGE* is in alarm

Which one of the following identifies the initial RPS trip signal and the procedure which contains the guidance to trip the Whiteville Line PCBs?

A. Control Valve Fast Closure;
0AOP-36.1, Loss of Any 4160V Buses or 480V E-Buses.

B. Stop Valve Closure;
0AOP-36.1, Loss of Any 4160V Buses or 480V E-Buses.

C. Control Valve Fast Closure;
0AOP-22, Grid Instability.

D. Stop Valve Closure;
0AOP-22, Grid Instability.

Feedback

K/A: 212000 A2.12
Ability to (a) predict the impacts of the following on the REACTOR PROTECTION SYSTEM ; and (b) based on those predictions, use procedures to correct, control, or mitigate the consequences of those abnormal conditions or operations:
Main turbine stop control valve closure
(CFR: 41.5 / 45.6)

RO/SRO Rating: 4.0/4.1

Objective: CLS-LP-03, Obj. 8.
List the RPS trip signals, including setpoints and how/when each signal is bypassed.

Reference:
SD-03 Reactor Protection System, section 3.1 RPS Trips

Cog Level
High

Explanation:
A load reject signal at any reactor power level will cause a turbine control valve fast closure scram. The load reject signal does not input into the turbine stop valve closure scram logic. During a loss of offsite power, if the grid is lost all PCBs are opened per 0AOP-36.1.

Distractor Analysis:
Choice A: Correct answer, see explanation

Choice B: Incorrect Load reject initiates a TCV fast closure scram not a TSV. A misconception of the difference between TCV and TSV scrams may cause a student to select this answer.

Choice C: Incorrect. 0AOP-22 does not have an action for loss of grid only for degraded.

Choice D: Incorrect. Load reject initiates a TCV fast closure scram not a TSV. A misconception of the difference between TCV and TSV scrams may cause a student to select this answer. 0AOP-22 does not have an action for loss of grid only for degraded.

SRO Basis: 10 CFR 55.43(b)-5, Assessment of facility conditions and selection of appropriate procedures during normal, abnormal, and emergency situations.

Notes

An example of Turbine Control Valve Fast Closure is a load reject. The definition of a load reject is greater than 40% mismatch between electrical output and mechanical input as sensed by generator stator amps and the Cross Around Piping pressure. This is to prevent excessive overspeed of the Turbine on loss of load.

A load reject signal will energize the fast acting Solenoid Valves on the control valve actuators, which removes hydraulic trip fluid pressure. The trip signal comes from pressure switches on the fast acting trip control (FATC) supply to the control valve disc dumps (refer to EHC Hydraulics). Loss of this pressure will cause a rapid closure of the control valves. Circuitry is designed such that the pressure switch on either control valve 1 or 3 will trip RPS Trip System A. Either control valve 2 or 4 will trip RPS Trip System B. These switches will also provide a Scram signal on loss of hydraulic trip fluid pressure when a load reject signal is not present - loss of hydraulic fluid pressure can result in a fast closure of the control valves.

SD-03	Rev. 9	Page 21 of 89

7. **IF** the SAT was lost due to loss of power on the Progress Energy System, **THEN PERFORM** the following:

   a. **PLACE** *AUTO RECLOSE* switches in *MANUAL*. ☐

   b. **PLACE** transmission line PCB *SUPERVISORY LOCAL/REMOTE* switches in *LOCAL*. ☐

   c. **TRIP** all transmission line PCBs. ☐

0AOP-36.2	Rev. 41	Page 4 of 196

Categories

K/A:	212000 A2.12	Tier / Group:	T2G1
RO Rating:	4.0	SRO Rating:	4.1
LP Obj:	03-08	Source:	PREV
Cog Level:	HIGH	Category 8:	Y

78. The Unit is at 7% power during reactor startup.
The operator withdraws control rod 26-27 to position 48.
The following indications are noted:

- *ROD DRIFT* alarm seals in
- *ROD OVER TRAVEL* alarm seals in
- Rod 26-27 full core display red light out

Which one of the following identifies:
(1) the indication that would be displayed on the four-rod group display and
(2) the required action for the inoperable control rod IAW Technical Specification 3.1.3, Control Rod Operability?

A. (1) 48
(2) Fully insert control rod 26-27 and disarm the HCU

B. (1) 48
(2) Verify ≥12 control rods are withdrawn and implement GP-11, Second Operator Rod Sequence Checkoff Sheets

C✓ (1) Blank
(2) Fully insert control rod 26-27 and disarm the HCU

D. (1) Blank
(2) Verify ≥12 control rods are withdrawn and implement GP-11, Second Operator Rod Sequence Checkoff Sheets

Feedback

K/A: 214000 A2.03
Ability to (a) predict the impacts of the following on the ROD POSITION INFORMATION SYSTEM ; and (b) based on those predictions, use procedures to correct, control, or mitigate the consequences of those abnormal conditions or operations:
Overtravel/in-out
(CFR: 41.5 / 45.6)

RO/SRO Rating: 3.6/3.9

Objective: CLS-LP-07 Obj 5b
Given plant conditions, determine if the following conditions exist: b. Indications of an uncoupled control rod.

Reference:
SD-07 page 27
TS 3.1.3

Cog Level
Low

Explanation:
If the control rod is in the overtravel out position, the corresponding digital indicator will be blank since the magnet will not be near any of the 00 to 48 reed switches. IAW TS the rod is declared inoperable then inserted to 00 (within 3 hours) and disarmed (within 4 hours). TS 3.1.6 if the RWM is inoperable then if ≥12 control rods are withdrawn GP-11 would be implemented, unless the rod is at 00 and is not intended to be moved.

Distractor Analysis:
Choice A: Plausible because the full in and 00 indications are at the same point or the examinee may think that the rod may settle to the 48 position.

Choice B: Plausible because the full in and 00 indications are at the same point or the examinee may think that the rod may settle to the 48 position. These are TS actions for an inoperable RWM, not control rod.

Choice C: Correct answer, see explanation.

Choice D: Plausible because this is the correct indication but these are TS actions for an inoperable RWM, not control rod.

SRO Basis: 10 CFR 55.43(b)-2, Facility operating limitations in the technical specifications and their bases. Application of required actions statements.

Notes

From SD-07

- Coupling integrity of a control rod shall be checked anytime a control rod is fully withdrawn by verifying that the rod does not reach the overtravel position. An uncoupling check can be performed by maintaining the continuous withdraw signal for approximately 3 to 5 seconds when the control rod has reached position 48 and verifying the control rod does not retract beyond position 48. If the rod is uncoupled, then the four rod display indication will go out for the uncoupled rod and the Rod Over Travel Annunciator A-05 4-2 will illuminate.

SD-07	Rev. 6	Page 27 of 57

C. One or more control rods inoperable for reasons other than Condition A or B.	C.1	----------NOTE---------- Inoperable control rod may be bypassed in the RWM or RWM may be bypassed as allowed by LCO 3.3.2.1, if required, to allow insertion of inoperable control rod and continued operation. ---------- Fully insert inoperable control rod.	3 hours
	AND		(continued)
C. (continued)	C.2	Disarm the associated CRD.	4 hours

From GP-11:

This procedure provides a method for a second licensed operator or qualified member of the plant technical staff to verify control rod movement and compliance with the prescribed BPWS control rod pattern with the rod worth minimizer (RWM) inoperable in conformance with the requirements of Technical Specification 3.3.2.1. If the RWM is inoperable due to bypassed control rod(s) that will not be moved during the startup/shutdown, then this procedure is not required.

Categories

K/A:	214000 A2.03	Tier / Group:	T2G2
RO Rating:	3.6	SRO Rating:	3.9
LP Obj:	07-5B	Source:	NEW
Cog Level:	HIGH	Category 8:	Y

79. Given the following ATWS conditions on Unit Two:

2A CRD Pump	Overcurrent trip
2B CRD Pump	Shaft uncoupled
HPCI System	Under Clearance
SLC	Both squib valves failed to fire
RCIC	Running with an unisolable steam supply leak
Suppression Pool Level	-24 inches
Reactor Power	10%
Reactor Water Level	160 inches

Which one of the following identifies the action that would be taken concerning the RCIC system based on the conditions above?

The RCIC system would:

A. be isolated to secure the source of the steam leak IAW 0AOP-05.0, Radioactive Spills, High Radiation, and Airborne Activity.

B. have the high suppression pool water level transfer defeated and its suction transferred back to the CST IAW SEP-10, Circuit Alterations Procedure.

C. remain running because it is needed for boron injection IAW LEP-03, Alternate Boron Injection.

D. be terminated and prevented to reduce level to 90 inches IAW LPC.

Feedback

K/A: 217000 G2.04.08
Knowledge of how abnormal operating procedures are used in conjunction with EOPs.
Reactor Core Isolation Cooling System (RCIC)
(CFR: 41.10 / 43.5 / 45.13)

RO/SRO Rating: 3.8/4.5

Objective: CLS-LP-300-J Obj 4
Given plant conditions and a copy of the LEPs, determine which method of alternate boron injection is appropriate.

Reference:
AOP-50 / SCCP / LEP-03 / LPC

Cog Level
high

Explanation: EOP action that supercedes the AOP action is what the question is asking.
AOP-5 does have a step to isolate the system that is leaking, but SCCP overrides that if the system is required by EOPs. With the ATWS the RCIC system is required for alternate boron injection. The Suppression Pool level is high but this will only transfer the HPCI suction valves as RCIC only transfers on CST level. LEP-03 would first want to use CRD then RCIC as long as suction is from CST.

Distractor Analysis:
Choice A: Plausible because AOP-5 does have a step to isolate the system that is leaking, but SCCP overrides that if the system is required by EOPs.

Choice B: Plausible because the high suppression pool level would transfer HPCI and SEP-10 has a section for transferring the suction to the CST from the Suppression Pool.

Choice C: Correct answer, see explanation

Choice D: Plausible becasue LPC does have a step for terminating and preventing but this does not address RCIC.

SRO Basis: 10 CFR 55.43(b)-5, Assessment of facility conditions and selection of appropriate procedures during normal, abnormal, and emergency situations.

Notes

Actions from AOP-05.0

1. **INITIATE** a search to locate and isolate the source of any coolant or steam leak. ☐

2. **IF** radiography is in progress, **AND** personnel are in danger of abnormal exposure, **THEN SECURE** radiography. ☐

3. **ENSURE** all personnel in the area monitor their dosimetry and report unusual exposure to E&RC. ☐

0AOP-05.0	Rev. 23	Page 6 of 10

From SCCP has the actions to leave the system running:

ISOLATE ALL SYSTEMS DISCHARGING INTO THE AREA EXCEPT SYSTEMS REQUIRED:

* **TO BE OPERATED BY AN EMERGENCY OPERATING PROCEDURE**
* **FOR DAMAGE CONTROL**

SCCP- 14

From LEP-03

NOTE: HPCI/RCIC should be used only if suction is from the CST.

From LPC, RCIC is not on list to Terminate and prevent (HPCI is):

LOWER REACTOR WATER LEVEL IRRESPECTIVE OF ANY REACTOR POWER OR REACTOR WATER LEVEL OSCILLATIONS BY TERMINATING AND PREVENTING INJECTION FROM THE FOLLOWING SYSTEMS UNLESS THE SYSTEM IS BEING USED TO INJECT BORON:

* CONDENSATE/FEEDWATER
* HPCI
* RHR
* CORE SPRAY
* ALTERNATE COOLANT INJECTION SYSTEMS

RC/L- 17

Categories

K/A:	217000 G2.04.08	Tier / Group:	T2G1
RO Rating:	3.8	SRO Rating:	4.5
LP Obj:	300J-4	Source:	NEW
Cog Level:	HIGH	Category 8:	Y

80. Unit Two was operating at rated power with the following conditions:

- A dual Unit Loss Of Offsite Power (LOOP)
- Spent Fuel Pool level is lowering rapidly due to a dropped test weight
- RRCP has been entered due to high rad conditions on the refuel floor

Which one of the following is the first makeup source to be used for filling the fuel pool and identifies the procedure to perform the action?

A. Emergency Diesel Makeup Pump via hoses IAW 0AOP-38.0, Loss of Fuel Pool Cooling

B. RHR B Loop via Fuel Pool Cooling System IAW 0AOP-38.0, Loss of Fuel Pool Cooling

C. Emergency Diesel Makeup Pump via hoses IAW 0EDMG-002, Spent Fuel Pool Makeup/Spray and Refuel Floor Enhanced Ventilation under Conditions of Extreme Damage

D. RHR B Loop via Fuel Pool Cooling System IAW 0EDMG-002, Spent Fuel Pool Makeup/Spray and Refuel Floor Enhanced Ventilation under Conditions of Extreme Damage

Feedback

K/A: 233000 G2.04.06
Knowledge of EOP mitigation strategies.
Fuel Pool Cooling and Clean-up
(CFR: 41.10 / 43.5 / 45.13)
There are no direct EOP actions associated with FPC, a loss of level in the fuel pool will cause entry into RRCP which is an EOP. So these actions are mitigation strategies to RRCP.

RO/SRO Rating: 3.7/4.7

Objective:
CLS-LP-13, Obj. 11. State the sources of makeup water for the Fuel Pool in order of preference.

Reference:
0AOP-38.0 Loss of Fuel Pool Cooling

Cog Level
High

Explanation:
The order of the makeup sources is from the normal fill, Demin water hose stations, Fire protection hose stations, demin water through RHR keepfill, and then other sources that are not service water. For a high capacity water source and the gates installed RHR Loop B would be used via the FPC system. With a LOOP the demin pumps have no power. If no other sources are availble then the proceudre has injection from the EDMP.

Distractor Analysis:
Choice A: Plausible because although this is a makeup source it is not the preferred source (last resort per the procedure) and is performed per the EDMG procedures. Although upon entering the AOP there is a step to start lining this system up for injection because of the time required to get all of the hoses run in the procedure up to the fuel pool.

Choice B: Correct answer see explanation

Choice C: Plausible because although this is a makeup source it is not the preferred source (last resort per the procedure). Although upon entering the AOP there is a step to start lining this system up for injection because of the time required to get all of the hoses run in the procedure up to the fuel pool.

Choice D: Plausible because RHR is the high capacity source that will need to be used, but the EDMG procedure does not provide this guidance.

SRO Basis: 10 CFR 55.43(b)-5, Assessment of facility conditions and selection of appropriate procedures during normal, abnormal, and emergency situations.

Notes

2. **IMMEDIATELY ENTER** 0EDMG-002, Spent Fuel Pool Makeup/Spray and Enhanced Refuel Floor Ventilation Under Conditions of Extreme Damage, **AND** make preparations to makeup to the fuel pool using the EDMP. ☐

3.2.12 **IF** a high capacity makeup source of water through the RHR System is required to maintain fuel pool level **AND** the fuel pool gates are installed, **THEN PERFORM** the following:

1. **CONFIRM** one of the following flow paths available for use with the Fuel Pool Cooling System:

   - RHR Loop B only (RHR Loop B Shutdown Cooling must be secured) ☐
   - RHR Loop A through RHR Loop Cross-Tie to the RHR Loop B discharge. (Both RHR Loop A and Loop B Shutdown Cooling must be secured). ☐

Actions for Emergency Diesel Makeup Pump:

3.2.19 **IF** no actions have been successful, **THEN ENTER** 0EDMG-002, Spent Fuel Pool Makeup/Spray and Refuel Floor Enhanced Ventilation under Conditions of Extreme Damage. ☐

From EMG-002:

3.3 Normal fuel pool makeup methods and the B.5.b requirement for a diverse internal strategy (using installed plant equipment) are contained in 0AOP-38.0, Loss of Fuel Pool Cooling. 0EDMG-002 is entered when the methods contained in 0AOP-38.0 have proven to be inadequate or cannot be performed.

Categories

K/A:	233000 G2.04.06	Tier / Group:	T2G2
RO Rating:	3.7	SRO Rating:	4.7
LP Obj:	13-11	Source:	NEW
Cog Level:	HIGH	Category 8:	

81. With Unit Two at rated power, which one of the following identifies:
(1) the required number of operable SRVs for safety function IAW Technical Specification 3.4.3, Safety/Relief Valves and
(2) the bases for this number of operable SRVs?

A. (1) 9
(2) prevent overpressurization associated with an ATWS event

B. (1) 10
(2) prevent overpressurization associated with an ATWS event

C. (1) 9
(2) prevent overpressurization associated with an MSIV closure

D. (1) 10
(2) prevent overpressurization associated with an MSIV closure

Feedback

K/A: 239002 G2.02.25
Knowledge of the bases in Technical Specifications for limiting conditions for operations and safety limits.
Safety Relief Valves
(CFR: 41.5 / 41.7 / 43.2)

RO/SRO Rating: 3.2/4.2

Objective: CLS-LP-25, Obj. 10
Given plant conditions and TS, including the Bases, TRM, ODCM, and COLR determine the required actions to be taken in accordance with TS associated with the Reactor Recirculation System. (SRO only)

Reference:
TS 3.4.3 and bases document

Cog Level
Low

Explanation:
TS 3.4.3 states 10 must be operational for the safety function, the bases states the reason, ATWS.

Distractor Analysis:
Choice A: Plausible because the bases states that 9 are required for the MSIV closure.

Choice B: Correct answer, see explanation

Choice C: Plausible because the bases states that 9 are required for the MSIV closure and the MSIV closure is not the binding failure mode.

Choice D: Plausible because 10 are required for the ATWS and the MSIV closure is not the binding failure mode.

SRO Basis: 10 CFR 55.43(b)-2, Facility operating limitations in the technical specifications and their bases. This is knowledge of tech spec bases to determine the reason 10 are required.

Notes

3.4.3 Safety/Relief Valves (SRVs)

LCO 3.4.3 The safety function of 10 SRVs shall be OPERABLE.

APPLICABILITY: MODES 1, 2, and 3.

From the Bases document:

APPLICABLE SAFETY ANALYSES	The overpressure protection system must accommodate the most severe pressurization transient. Evaluations have determined that the most severe transient is the closure of all main steam isolation valves (MSIVs), followed by reactor scram on high neutron flux (i.e., failure of the direct scram associated with MSIV position) (Ref. 1). For the purpose of the analyses, 9 SRVs are assumed to operate in the safety mode. The analysis results demonstrate that the design SRV capacity is capable of maintaining reactor pressure below the ASME Code limit of 110% of vessel design pressure (110% x 1250 psig = 1375 psig). This LCO helps to ensure that the acceptance limit of 1375 psig is met during the Design Basis Event.

(continued)

APPLICABLE SAFETY ANALYSES (continued)	For overpressurization associated with an ATWS event, 10 SRVs are assumed to operate in the safety mode. The analysis (Ref. 2) results demonstrate that the design capacity is capable of maintaining reactor pressure below the ASME Section III Code Service Level C limits (1500 psig). From an overpressure standpoint, the design basis events are bounded by the overpressurization associated with the ATWS event described above. Reference 3 discusses additional events that are expected to actuate the SRVs. SRVs satisfy Criterion 3 of 10 CFR 50.36(c)(2)(ii) (Ref. 4).

Categories

K/A:	239002 G2.02.25	Tier / Group:	T2G1
RO Rating:	3.2	SRO Rating:	4.2
LP Obj:	25-10	Source:	NEW
Cog Level:	LOW	Category 8:	Y

82. Unit One is operating at full power when the Main Stack Rad Monitor lost its normal power supply.

Which one of the following identifies the procedure that contains the steps to transfer the Main Stack Rad Monitor to its alternate power supply?

A. 1OP-52, 120 Volt AC UPS, Emergency, and Conventional Electrical Systems Operating Procedure

B.✓ 2OP-52, 120 Volt AC UPS, Emergency, and Conventional Electrical Systems Operating Procedure

C. 1APP UA-03 6-3, *PROCESS SMPL OG VENT PIPE DNSC/INOP*

D. 2APP UA-03 6-3, *PROCESS SMPL OG VENT PIPE DNSC/INOP*

Feedback

K/A: 262002 G2.01.23
Ability to perform specific system and integrated plant procedures during all modes of plant operation.
Uninterruptable Power Supply (A.C./D.C.)
(CFR: 41.10 / 43.5 / 45.2 / 45.6)

RO/SRO Rating: 4.3/4.4

Objective: CLS-LP-11.0, 15a
Given plant conditions and a trip or failure of one of the following Radiation Monitors, determine appropriate plant response and use procedures to determine the actions required to control and/or mitigate the consequences of the event:
a. Main Stack.

Reference:
2OP-52, Section 8.7, Stack Radiation Monitor UPS Power Supply Transfer

Cog Level
High

Explanation:
The normal power supply for the Main Stack Rad Monitor is from Unit Two. On a loss of power the from the normal power supply the operators will need to transfer to the alternate power supply. This direction is only in the U2 procedure. There is no directions to perform this in the U1 procedure or the APPs for either Unit.

Distractor Analysis:
Choice A: Plausible because the stem states this is U1 but the actions are in the U2 procedure.

Choice B: Correct answer, see explanation.

Choice C: Plausible because the downscale / inop annunciator will be actuated on a loss of power but the APPs do not address transfer of power to backup supply.

Choice D: Plausible because the downscale / inop annunciator will be actuated on a loss of power but the APPs do not address transfer of power to backup supply. U2 is the normal power supply to the rad monitor.

SRO Basis: 10 CFR 55.43(b)-5, Assessment of facility conditions and selection of appropriate procedures during normal, abnormal, and emergency situations.

Notes

PROCESS SMPL OG VENT PIPE DNSC/INOP
(Process Sample Off-Gas Pipe Down-Inoperable)

AUTO ACTIONS

NONE

CAUSE

1. Off-gas vent pipe (stack) radiation monitor downscale or out of service.
2. Circuit malfunction.
3. Change in background counts, possibly from unit power reduction.

Categories

K/A:	262002 G2.01.23	Tier / Group:	T2G1
RO Rating:	4.3	SRO Rating:	4.2
LP Obj:	11-15A	Source:	NEW
Cog Level:	HIGH	Category 8:	Y

83. The following conditions exist on Unit Two following a spurious Main Turbine trip at rated power:

SDV HI-HI WTR LVL TRIP BYPASS	In alarm
OTBD NSSS VALVES MTR OVERLOAD	In alarm
Reactor level	185 inches and steady
Reactor Pressure	900 psig with BPVs controlling
All Control Rods	Fully inserted
Scram	Being reset IAW LEP-02
RWCU System	Isolated by 2-G31-F001

The 2-G31-F004 (RWCU Outboard Isol Vlv) failed to automatically close on a valid isolation signal due to motor overload.

Which one of the following identifies the Technical Specification requirements when the RSP is exited?

The RSP can be exited to 0GP-05, Unit Shutdown, provided an active LCO is implemented for Technical Specification __(1)__.
The start time of the LCO action completion time is when the __(2)__.

A. (1) 3.3.1.1, Reactor Protection System (RPS) Instrumentation
(2) condition occurred

B. (1) 3.3.1.1, Reactor Protection System (RPS) Instrumentation
(2) RSP is exited

C. (1) 3.6.1.3, Primary Containment Isolation Valves (PCIVs)
(2) condition occurred

D. (1) 3.6.1.3, Primary Containment Isolation Valves (PCIVs)
(2) RSP is exited

Feedback

K/A: S295006G 2.02.22
Knowledge of limiting conditions for operations and safety limits.
SCRAM
(CFR: 41.5 / 43.2 / 45.2)

RO/SRO Rating: 4.0/4.7

Objective: CLS-LP-300-C*11
11. Given plant conditions, the Unit Shutdown Procedure (GP-05), and the Reactor Scram Procedure, determine if conditions allow exiting the Reactor Scram Procedure.

Reference:
10CFR50.36
0EOP-01-UG, Revision 55, Page 31, Section 3.5

Cog Level: High

Explanation:
The EOPs authorize actions outside of technical specifications to mitigate the consequences of an emergency condition. The EOPs also provide for returning the system or component to service. If the system or component is not returned to its standby or operable condition prior to exiting the EOPs, then the appropriate limiting condition of operation shall be implemented in accordance with Technical Specifications. The starting time for the limiting condition of operation is the time that the EOPs were exited.
In order to exit EOP, compatibilty with GP-05 along with active LCOs need to be implemented. PCIV G31-F004 is inoperable, TS 3.6.1.3 Condition A (A1)requires isolating the affected penetration flow path by use of at least one closed and de-activated automatic valve, closed manual valve, blind flange, or check valve with flow through the valve secured within 8 hours AND (A2) Verify the affected penetration flow path is isolated Once per 31 days for isolation devices outside primary containment AND Prior to entering MODE 2 or 3 from MODE 4, if primary containment was de-inerted while in MODE 4, if not performed within the previous 92 days, for isolation devices inside primary containment.

Distractor Analysis:
Choice A: Plausible because 0GP-01 would be entered in order to restart the reactor and TS 3.3.1.1 would be correct if the unit was in Mode 1 or 2 - SDV Hi level is not required in Mode 3.

Choice B: Plausible because 0GP-05 is correct and TS 3.3.1.1 would be correct if the unit was in Mode 1 or 2 - SDV Hi level is not required in Mode 3.

Choice C: Plausible because 0GP-01 would be entered in order to restart the reactor and TS 3.6.1.3 is correct.

Choice D: Correct Answer

SRO Only Basis: Requires assessment of plant conditions (RPS SDV Hi Level Bypass and Failed open PCIV) and prescribing a procedure with which to proceed (0GP-05).

Notes

3.5 Technical Specifications

The EOPs authorize actions outside of technical specifications to mitigate the consequences of an emergency condition. The EOPs also provide for returning the system or component to service. If the system or component is not returned to its standby or operable condition prior to exiting the EOPs, then the appropriate limiting condition of operation shall be implemented in accordance with Technical Specifications. The starting time for the limiting condition of operation is the time that the EOPs were exited.

1.0 USE AND APPLICATION

1.3 Completion Times

PURPOSE	The purpose of this section is to establish the Completion Time convention and to provide guidance for its use.
BACKGROUND	Limiting Conditions for Operation (LCOs) specify minimum requirements for ensuring safe operation of the unit. The ACTIONS associated with an LCO state Conditions that typically describe the ways in which the requirements of the LCO can fail to be met. Specified with each stated Condition are Required Action(s) and Completion Times(s).
DESCRIPTION	The Completion Time is the amount of time allowed for completing a Required Action. It is referenced to the time of discovery of a situation (e.g., inoperable equipment or variable not within limits) that requires entering an ACTIONS Condition unless otherwise specified, providing the unit is in a MODE or specified condition stated in the Applicability of the LCO. Required Actions must be completed prior to the expiration of the specified Completion Time. An ACTIONS Condition remains in effect and the Required Actions apply until the Condition no longer exists or the unit is not within the LCO Applicability.

1.0 OPERATOR ACTIONS:

1.1 **OBSERVE** Automatic Functions:

1.1.1 IF one of the affected valves was being operated, **THEN:**

1. Valve motion will stop
2. Valve will **NOT** respond to control signals
3. Valve position will still be indicated

1.2 **PERFORM** Corrective Actions:

NOTE: Resetting valve motor overload devices or manual operation of tripped motor-operated valves should only be attempted in emergency situations as directed by the Unit SCO.

CAUTION

During manual operation of motor-operated valves, personnel should stand clear of the valve while either:

1. Resetting the thermal overload device or
2. Operating the valve remotely.

1.2.1 IF the affected valve is required for operation, **THEN PERFORM** the following steps:

1. **RESET** the thermal overload device at the affected valve breaker compartment **AND OPERATE** the valve again.
2. **IF** the thermal overload device actuates again, **THEN MANUALLY OPERATE** the valve.
3. **WHEN** the valve is broken off its closed or open seat, **THEN RESET** the thermal overload device at the affected valve breaker compartment **AND OPERATE** the valve.

1.2.2 **REFER** to T.S. 3.6.1.3 and TRM App. D Table 3.6.1.3-2.

3.6 CONTAINMENT SYSTEMS

3.6.1.3 Primary Containment Isolation Valves (PCIVs)

LCO 3.6.1.3 Each PCIV, except reactor building-to-suppression chamber vacuum breakers, shall be OPERABLE.

APPLICABILITY: MODES 1, 2, and 3,

When associated instrumentation is required to be OPERABLE per LCO 3.3.6.1, "Primary Containment Isolation Instrumentation."

CONDITION	REQUIRED ACTION		COMPLETION TIME
A. ----------NOTE---------- Only applicable to penetration flow paths with two PCIVs. ---------- One or more penetration flow paths with one PCIV inoperable except for MSIV leakage not within limit.	A.1	Isolate the affected penetration flow path by use of at least one closed and de-activated automatic valve, closed manual valve, blind flange, or check valve with flow through the valve secured.	8 hours
	AND		

3.3 INSTRUMENTATION

3.3.1.1 Reactor Protection System (RPS) Instrumentation

LCO 3.3.1.1 The RPS instrumentation for each Function in Table 3.3.1.1-1 shall be OPERABLE.

APPLICABILITY: According to Table 3.3.1.1-1.

ACTIONS

----------NOTE----------
Separate Condition entry is allowed for each channel.

Table 3.3.1.1-1 (page 2 of 3)
Reactor Protection System Instrumentation

FUNCTION	APPLICABLE MODES OR OTHER SPECIFIED CONDITIONS	REQUIRED CHANNELS PER TRIP SYSTEM	CONDITIONS REFERENCED FROM REQUIRED ACTION D.1	SURVEILLANCE REQUIREMENTS	ALLOWABLE VALUE
7. Scram Discharge Volume Water Level—High	1,2	2	G	SR 3.3.1.1.5 SR 3.3.1.1.9 SR 3.3.1.1.13 SR 3.3.1.1.15	≤ 109 gallons

CONDITION	REQUIRED ACTION	COMPLETION TIME
A. One or more required channels inoperable.	A.1 Place channel in trip.	12 hours
	OR	
	A.2 ----------NOTE---------- Not applicable for Functions 2.a, 2.b, 2.c, 2.d, or 2.f. ---------- Place associated trip system in trip.	12 hours

Categories

K/A:	S2950006G 2.02.22	Tier / Group:	T1G1
RO Rating:	4.0	SRO Rating:	4.7
LP Obj:	CLS-LP-300-C*11	Source:	NEW
Cog Level:	HIGH	Category 8:	

84. Following a scram on Unit Two, which one of the following correctly identifies:
(1) the initial response of reactor water level if an SRV is opened and
(2) the procedure that contains the guidance to close the MSIVs due to water level?

A. (1) Shrink
(2) Reactor Scram Procedure

B. (1) Shrink
(2) 2APP-A-07, *REACTOR WATER LEVEL HIGH/LOW*

C✓ (1) Swell
(2) Reactor Scram Procedure

D. (1) Swell
(2) 2APP-A-07, *REACTOR WATER LEVEL HIGH/LOW*

Feedback

K/A: 295008 A2.05
Ability to determine and/or interpret the following as they apply to HIGH REACTOR WATER LEVEL:
Swell
(CFR: 41.10 / 43.5 / 45.13)

RO/SRO Rating: 2.9/3.1

Objective: CLS-LP-300-C, 10
Given plant conditions and the RSP, determine the required operator actions.

Reference:
RSP / 0OI-37.3
2APP-A-07, page 12

Cog Level: High

Explanation:
Opening of the SRV will cause the reactor water level to swell up due to the reduction in pressure in the vessel and if level reaches the value in figure 1 on the RSP then closure of the MSIVs is directed. The MSIVs will close automatically but only on low level 3, not high level.

Distractor Analysis:
Choice A: Plausible if the examinee thinks that opening the SRV would reduce the water volume in the RPV, The RSP does contain the actions to close the MSIVs.

Choice B: Plausible if the examinee thinks that opening the SRV would reduce the water volume in the RPV, the examinee may think that the closure is an auto action, which are contained in the APP.

Choice C: Correct see explanation

Choice D: Plausible because reactor water level will swell, and the examinee may think that the closure is an auto action, which are contained in the APP.

SRO Basis: 10 CFR 55.43(b)-5, Assessment of facility conditions and selection of appropriate procedures during normal, abnormal, and emergency situations.

Notes

1.0 OPERATOR ACTIONS:

1.1 **CONFIRM** by multiple indications actual high or low reactor water level:

1.1.1 Reactor water level indication on RTGB Panel P603 may be used for verification of water level:

1. Reactor Water Level A, C32-LI-R606A.
2. Reactor Water Level B, C32-LI-R606B.
3. Reactor Water Level C, C32-LI-R606C.
4. Reactor Level/Pressure Recorder, C32-R608.

1.2 **OBSERVE** Automatic Functions:

1.2.1 IF reactor level decreases to 166 inches, **THEN** a reactor Scram results.

1.2.2 IF reactor level increases to 206 inches, **THEN** the Main Turbine, RFPTs, RCIC and HPCI turbines will trip.

1.2.3 IF either of the RFPs have tripped **AND** reactor water level is less than 182 inches, **THEN** a Recirculation Pump runback will occur.

From the Reactor Scram Procedure:

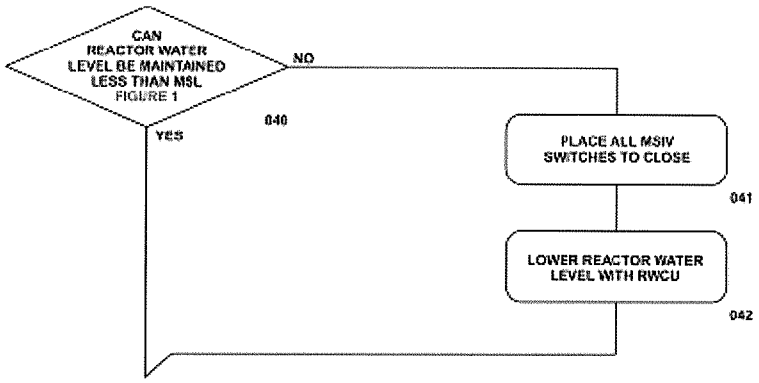

FIGURE 21
Reactor Water Level at MSL
(Main Steam Line Flood Level)

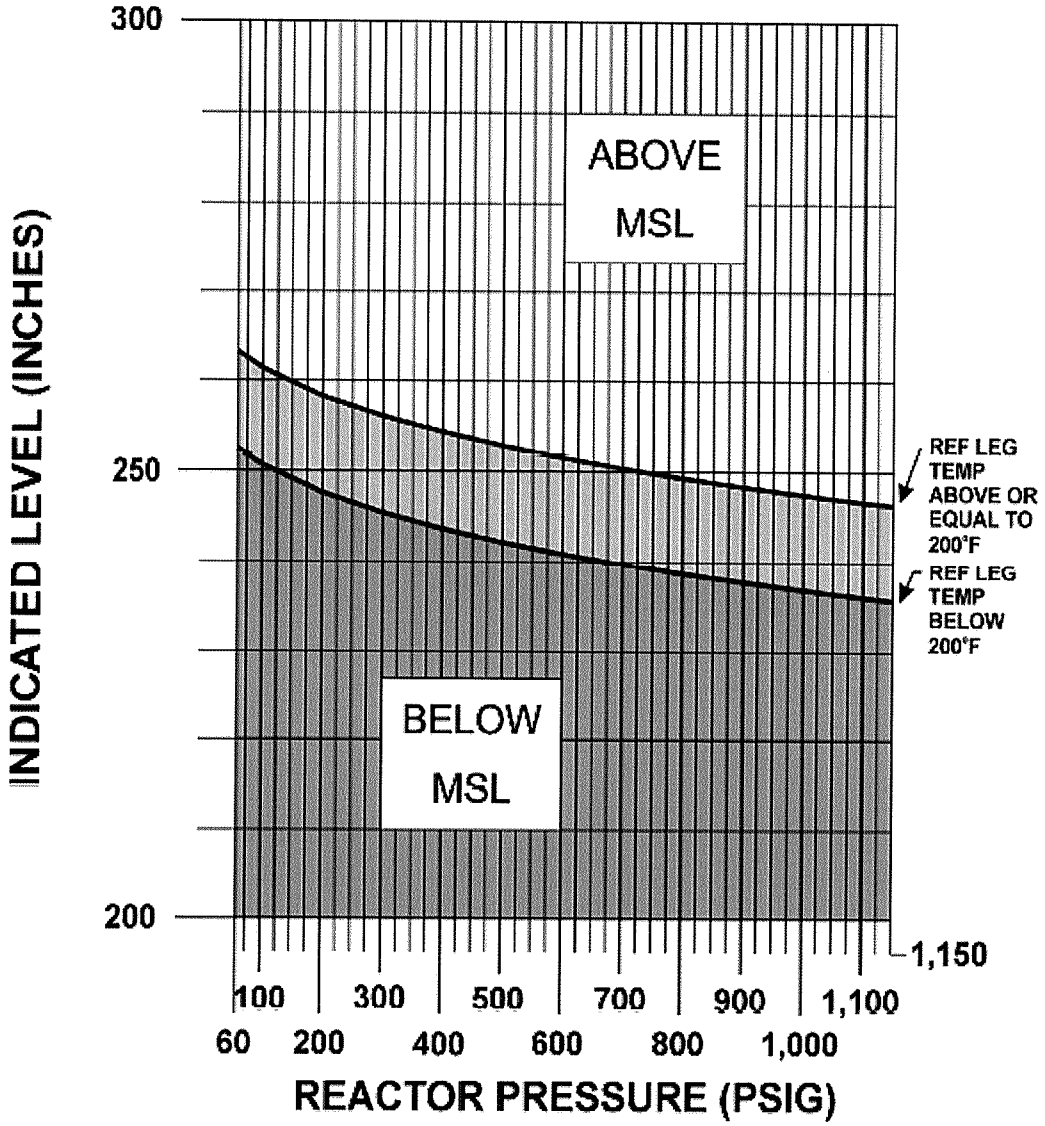

WHEN REACTOR PRESSURE IS LESS THAN
60 PSIG, USE INDICATED LEVEL.
MSL IS +250 INCHES.

Categories

K/A:	295008 A2.05	Tier / Group:	T1G2
RO Rating:	2.9	SRO Rating:	3.1
LP Obj:	300-C, 10	Source:	NEW
Cog Level:	HIGH	Category 8:	Y

85. Unit Two is operating at 74% power when the FW-V120, FW HTRS 4 & 5 BYP VLV, is inadvertantly opened by mechanics. The valve is bound and can not be reclosed. Initial Final Feedwater Temperature was 404°F.

Conditions are now stable with reactor power at 81% and Final Feedwater Temperature at 314°F.

(Reference provided)

Which one of the following identifies the required action based on the information above?

Continued operation:

A. is not allowed and reactor shutdown is required IAW 0GP-05, Unit Shutdown.

B. is not allowed and a manual reactor scram is required IAW 0OI-01.01, BNP Conduct of Operations Supplement.

C. is allowed provided the FW Heaters 4 & 5 are isolated IAW 2OP-32, Condensate and Feedwater Operating Procedure.

D. is allowed provided reduced thermal limits are established within 4 hours as required by Technical Specifications.

Feedback

K/A: 295014 G2.01.25
Ability to interpret reference materials, such as graphs, curves, tables, etc.
Inadvertent Reactivity Addition
(CFR: 41.10 / 43.5 / 45.12)

RO/SRO Rating: 3.9/4.2

Objective: CLS-LP-34, Obj. 11c
Given plant conditions, describe the effect a loss/malfunction of the feedwater heaters will have on:
c. Feedwater Temperature

Reference:
2OP-32, Attachment 4 (provided)

Cog Level HI

Explanation:
From Attachment 4 of 2OP-32 operation is outside of the allowable range (<110.3°F) this wil require a Unit shutdown IAW GP-05.

Distractor Analysis:
Choice A: Correct see explanation

Choice B: Plausible because the OI has a table with the Selected Out-of-Service Equipment Contingencies. In this case the FW heater meets the definition of the heater OOS and operation is permitted.

Choice C: Plausible because operation is allowed if the FW heaters are isolated but not with the final temperature greater than the 110.3 limit.

Choice D: Plausible because if turbine bypass is inoperable with a FW Heater OOS then TS 3.7.6 requires this action.

SRO Basis: Assessment of facility conditions and selection of appropriate procedures during normal, abnormal, and emergency situations (43(b)(5) a. Assessement of the plant conditions and then prescribing the shutdown IAW the GP.

Notes

From OP-32, Attachment 4, Final Feedwater Temperature Vs Power

RX PWR	Nominal FW Temp	Nominal FW Temp Reduced 10°F	110.3°F Reduced FW Temp
100	429.0	419.0	328.7
99	427.6	417.6	327.7
98	426.5	416.6	327.0
97	425.5	415.6	326.3
96	424.4	414.6	325.7
95	423.4	413.6	325.0
94	422.4	412.6	324.3
93	421.4	411.7	323.7
92	420.4	410.7	323.0
91	419.5	409.8	322.4
90	418.5	408.8	321.7
89	417.5	407.9	321.1
88	416.5	406.9	320.4
87	415.6	406.0	319.8
86	414.6	405.0	319.1
85	413.6	404.1	318.5
84	412.6	403.1	317.8
83	411.7	402.2	317.2
82	410.7	401.2	316.5
81	409.7	400.3	315.8
80	408.7	399.3	315.2
79	407.6	398.3	314.5
78	406.6	397.3	313.8
77	405.6	396.3	313.1
76	404.5	395.3	312.4
75	403.5	394.2	311.7
74	402.4	393.2	311.0
73	401.3	392.1	310.3

CAUTION

Unit operation outside the bounds of the Loss of Feedwater Heating analysis is prohibited.

9. **IF** Step 8.7.2.8.c criteria is **NOT** met, **THEN PERFORM** the following:

   a. **IMMEDIATELY NOTIFY** the Unit SCO. _____

   b. **RESTORE** unit operation within the bounds of the cycle Loss of Feedwater Heating analysis _____

   OR

   c. **COMMENCE** unit shutdown in accordance with 0GP-05. _____

Condition	Permitted Operation	Comment
***OOS Single** (See **NOTES**)*		
FWHOOS	Yes	▪ Defined as a 10 °F or greater reduction in nominal feedwater temperature.
FWTR (FFTR)	Yes	▪ Defined as a 10 °F or greater reduction in feedwater temperature. ▪ Defined as a cycle extension strategy.
MSIVOOS	Yes-base	▪ MSIVOOS permits 1 MSIV to be inoperable. ▪ IF MSIVOOS, THEN thermal power shall be limited to 70% of rated.
TBPOOS	Yes	▪ TBPOOS assumes all turbine bypass valves (TBV) are inoperable.
SLO	Yes	▪ Permitted with a thermal limit penalty.
***OOS Combination** (See **NOTES**)*		
TBPOOS & FWHOOS	Yes	▪ Combined OOS condition is permitted with a thermal limit penalty.
TBPOOS & FWTR (FFTR)	Yes	▪ Combined OOS condition is permitted with a thermal limit penalty.
Operating		
Power/Flow Map + ICF	Yes-base	▪ Permitted operations with thermal limits defined by OOS condition.
Power Coastdown	Yes-base	▪ Permitted operations with thermal limits defined by OOS condition.
Turbine Control Mode	Yes-base	▪ Partial arc operation is supported by safety analysis for all OOS conditions.
RCR Pump Pwr Source	Yes-base	▪ Power source can be provided by the UAT or SAT for all OOS conditions.
Yes:	Operations are permitted with restrictive thermal limits.	
Yes-base:	Operations are permitted with base thermal limits. No thermal limit changes are required.	

Categories

K/A:	295014 G2.01.25	Tier / Group:	T1G2
RO Rating:	3.9	SRO Rating:	4.2
LP Obj:	34-11C	Source:	NEW
Cog Level:	HIGH	Category 8:	

8.7.2 Procedural Steps Initials

CAUTION

Opening the Feedwater Heater tube side vents will release hot discharges under pressure to the drain trough.

z. **PERFORM** the following to vent the tube side of the 4A(B) feed water heater:

- **OPEN** *FEEDWATER HEATER 4A(B) CHANNEL INBOARD VENT VALVE, MVD-V69(V76).* _____

- **CRACK OPEN** *FEEDWATER HEATER 4A(B) OUTBOARD CHANNEL VENT VALVE, MVD-V70(V75),* to establish a vent path. _____

aa. **PERFORM** the following to vent the tube side of the 5A(B) feed water heater:

- **OPEN** *FEEDWATER HEATER 5A(B) CHANNEL INBOARD VENT VALVE, MVD-V81(V88).* _____

- **CRACK OPEN** *FEEDWATER HEATER 5A(B) CHANNEL OUTBOARD VENT VALVE, MVD-V82(V87),* to establish a vent path. _____

NOTE: Step 8.7.2.8 ensures unit operation with reduced feedwater temperature is bounded by the cycle Loss of Feedwater Heating analysis.

8. **EVALUATE** reduction in final feedwater temperature for compliance with Loss of Feedwater Heating analysis as follows:

a. **RECORD** current final feedwater temperature from PPC Display 825. _____

314 °F.

8.7.2 Procedural Steps Initials

b. **RECORD** 110.3°F Reduced FFWT value for current reactor power from Attachment 4. _____

315.8 °F

c. **CONFIRM** reduction in final feedwater temperature is less than 110.3°F by comparing the following: _____

314 °F > 315.8 °F
8.7.2.8.a 8.7.2.8.b

CAUTION

Unit operation outside the bounds of the Loss of Feedwater Heating analysis is prohibited.

9. **IF** Step 8.7.2.8.c criteria is **NOT** met, **THEN PERFORM** the following:

a. **IMMEDIATELY NOTIFY** the Unit CRS. _____

b. **RESTORE** unit operation within the bounds of the cycle Loss of Feedwater Heating analysis _____

OR

c. **COMMENCE** unit shutdown in accordance with 0GP-05. _____

10. **IF** feedwater temperature is more than 10°F below nominal (refer to Attachment 4), **AND** reactor power is greater than or equal to 30% of rated thermal power, **THEN PERFORM** the following:

a. **ENSURE** reactor operation in accordance with applicable FWTR Power to Flow Map. _____

b. **REFER** to 2OI-03.2 for required actions. _____

8.7.2 **Procedural Steps** Initials

R54 11. **CONFIRM** feedwater flow temperature compensation is accurate by performing the following:

NOTE:	Feedwater Line A temperature can be obtained from any of the following: PPC Point U2CP_B050 PPC Point U2CP_B051 Feedwater Lines Temperature Recorder, *B21-TR-5515* (20' el. Reactor Building)

a. **DETERMINE** Feedwater Line A temperature **AND RECORD** temperature and instrument used below: _____

_____ °F _____
FW Line A temp Instrument

NOTE:	Feedwater Line B temperature can be obtained from any of the following: PPC Point U2CP_B052 PPC Point U2CP_B053 Feedwater Lines Temperature Recorder, *B21-TR-5515*, (20' el. Reactor Building)

b. **DETERMINE** Feedwater Line B temperature **AND RECORD** temperature and instrument used below: _____

_____ °F _____
FW Line B temp Instrument

c. **OBTAIN** Feedwater Line A feedwater flow compensation value using Feedwater Line A temperature recorded in Step 8.7.2.11.a and Attachment 9 **AND RECORD** on Attachment 10, column 1. _____

8.7.2 Procedural Steps Initials

d. **OBTAIN** Feedwater Line B feedwater flow compensation value using Feedwater Line B temperature recorded in Step 8.7.2.11.b and Attachment 9 **AND RECORD** on Attachment 10, column 1. _____

NOTE: Process Computer compensation values are located on the second page of the C32B022/B023 screen under HANDLING PARAMETERS, CORRECTION TYPE FACTOR 0.

e. **OBTAIN** CORRECTION TYPE FACTOR 0 compensation value for PPC Point U2C32B022 (Feedwater Line A) **AND RECORD** on Attachment 10, column 2. _____

f. **OBTAIN** CORRECTION TYPE FACTOR 0 compensation value for PPC Point U2C32B023 (Feedwater Line B) **AND RECORD** in Attachment 10, column 2. _____

NOTE: **IF** the values compared in the following step are within 0.002, **THEN** feedwater flow temperature compensation is accurate.

g. **VERIFY** the values on Attachment 10, columns 1 and 2 for Feedwater Line A are within 0.002 **AND DOCUMENT** on Attachment 10. _____

h. **VERIFY** the values on Attachment 10, columns 1 and 2 for Feedwater Line B are within 0.002 **AND DOCUMENT** on Attachment 10. _____

i. **IF** feedwater flow temperature compensation is **NOT** accurate, **THEN IMMEDIATELY NOTIFY** the duty Reactor Engineer. _____

86. While in Mode 3 with Shutdown Cooling (SDC) in service on Unit One, a complete Loss of Off-site Power (LOOP) occurs.

The 1-E11-F009, RHR Shutdown Cooling Inboard Isolation Valve, mechanically binds in a mid-position and cannot be fully opened.

Which one of the following is the minimum level required to support natural circulation and identifies the procedural method for Decay Heat removal that is available?

The minimum Reactor Water Level to support Natural Circulation is __(1)__ inches. The available method of decay heat removal is __(2)__.

A. (1) 200
   (2) Alternate Decay Heat Removal Using Natural Circulation and FPCCS and SSFPC IAW 1OP-17, Residual Heat Removal System Operating Procedure

B.✓ (1) 200
   (2) Alternate Shutdown Cooling IAW 0AOP-15.0, Loss of Shutdown Cooling

C. (1) 254
   (2) Alternate Decay Heat Removal Using Natural Circulation and FPCCS and SSFPC IAW 1OP-17, Residual Heat Removal System Operating Procedure

D. (1) 254
   (2) Alternate Shutdown Cooling IAW 0AOP-15.0, Loss of Shutdown Cooling

Feedback

K/A: S295021 A2.03
Ability to determine and/or interpret the following as they apply to LOSS OF SHUTDOWN COOLING :
Reactor water level
(CFR: 41.10 / 43.5 / 45.13)

RO/SRO Rating: 3.5/3.5

Objective: CLS-LP-120*06
6. Describe how to determine when natural circulation exists within the Reactor Vessel.

Reference:
0AOP-15, Revision 23, Page 11, Section 3.2.14

Cog Level: High

Explanation:
During conditions in which there is no circulation, the reactor vessel water level, as read on *B21-LI-R605A(B),* should be maintained between 200" and 220", or as directed by the Shift Superintendent based on plant conditions, until forced circulation is restored. With a LOOP present and no actions taken to restore Off-site power (not provided in the question), the only available means of decay heat removal is alternate shutdown cooling utilizing SRVs.

Distractor Analysis:
Choice A: Plausible because 200 inches is correct and OP-17 contains actions for using FPC and SSFPC, but these would only be available if the reactor head is removed and fuel pool gates removed.

Choice B: Correct Answer

Choice C: Plausible because 254 inches is the level of the MSLs and could be confused with Natural Circulation level due to the requirement to be at this level during alternate SDC and OP-17 contains actions for using FPC and SSFPC, but these would only be available if the reactor head is removed and fuel pool gates removed.

Choice D: Plausible because Plausible because 254 inches is the level of the MSLs and could be confused with Natural Circulation level due to the requirement to be at this level during alternate SDC

SRO Only Basis: Assessment of facility conditions and selection of appropriate procedures during normal, abnormal, and emergency situations (43(b)(5)a. Requires assessing plant conditions (LOOP, Mode 3, power availability, impact of power losses) and prescribing correct section of a procedure to provide DHR.

Notes

2.0 AUTOMATIC ACTIONS

- Loop A(B) *INBOARD INJECTION VALVE, E11-F015A(B)*, will close (Low Level One Only) ☐

- The RHR Pump in service for Shutdown Cooling will trip on a loss of suction path. ☐

3.0 OPERATOR ACTIONS

3.1 Immediate Actions

None

3.2 Supplementary Actions

1

CAUTION

If reactor coolant temperature is greater than 212°F and reactor water level has been raised to greater than 218 inches for 10 minutes or more, a false RPV low level signal could result when the reference leg condensing pot N12A(B) nozzle is uncovered as level is subsequently lowered below 218 inches.

3.2.1 IF Shutdown Cooling has been lost due to a tripped RHR Pump, **THEN START** an RHR Pump in the loop being used for Shutdown Cooling. ☐

NOTE: During conditions in which there is no circulation, the reactor vessel water level, as read on *B21-LI-R605A(B)*, should be maintained between 200" and 220", or as directed by the Shift Superintendent based on plant conditions, until forced circulation is restored.

3.2.2 IF forced circulation has been lost, **AND** natural circulation has **NOT** been established, **THEN RESTORE AND MAINTAIN** reactor vessel water level. ☐

3.0 OPERATOR ACTIONS

j. IF the reactor coolant temperature is less than 212°F, **THEN ENSURE** the following valves are open:

- *INBOARD RX HEAD VENT VLV, B21-F003* ☐
- *OUTBOARD RX HEAD VENT VLV, B21-F004.* ☐

k. **MAINTAIN** RHR in Shutdown Cooling in accordance with 1(2)OP-17. ☐

6. IF RHR has **NOT** been restored in accordance with Step 3.2.11.5, **THEN PLACE** the RHR loop that was operating in Shutdown Cooling back in service in accordance with 1(2)OP-17 as soon as conditions permit. ☐

3.2.12 IF necessary to minimize reactor coolant temperature rise, **THEN PERFORM** one of the following feed and bleed combinations: ☐

Not Avail (LOOP)

Not Avail (RPS not reset)

FEED	BLEED
COND/FW in accordance with 1(2)OP-32	RWCU Reject in accordance with 1(2)OP-14
CRD in accordance with 1(2)OP-08	Reactor Water Level Control using Main Steam Lines in accordance with 1(2)OP-32.
Core Spray in accordance with 1(2)OP-18	Maintaining RPV Level Using the Main Steam Line Drains with 1(2)OP-25.
LPCI in accordance with 1(2)OP-17	

Not Avail (LOOP)

3.2.13 IF **NEITHER** RHR loop can be placed in Shutdown Cooling, **THEN PLACE** the Condensate System in Condenser Cooling in accordance with 1(2)OP-32. ☐

3.0 OPERATOR ACTIONS

3.2.14 **IF ALL** of the above methods can **NOT** maintain reactor vessel coolant temperature below 212°F, **THEN INITIATE** alternate Shutdown Cooling with the SRVs as follows:

1. **ENSURE ALL** control rods are fully inserted. ☐

2. **CONFIRM** reactor vessel head is installed and tensioned. ☐

3. **IF** the Reactor Recirculation Pumps are running, **THEN PERFORM** the following:

   a. **RAISE AND MAINTAIN** reactor water level between 200" and 220" as read on *B21-LI-R605A(B)*, or as directed by Shift Superintendent based on plant conditions. ☐

   b. **STOP** the running Reactor Recirculation Pumps in accordance with 1(2)OP-02. ☐

4. **SHUT DOWN** the RHR loop that was operating in Shutdown Cooling in accordance with 1(2)OP-17. ☐

5. **PLACE** one RHR loop in the Suppression Pool Cooling mode in accordance with 1(2)OP-17. ☐

6. **IF** Suppression Pool temperature rises above 95°F, **THEN GO TO** 0EOP-02-PCCP, Primary Containment Control Procedure **AND PERFORM CONCURRENTLY** with this procedure. ☐

Categories

K/A:	S295021 A2.03	Tier / Group:	T1G1
RO Rating:	3.5	SRO Rating:	3.5
LP Obj:	CLS-LP-120*06	Source:	NEW
Cog Level:	HIGH	Category 8:	

87. While performing refueling activities on Unit Two, a spent fuel bundle was dropped and the following alarms were received:

AREA RAD REFUEL FLOOR HIGH
PROCESS RX BLDG VENT RAD HIGH

Which one of the following identifies:
(1) the immediate operator action that is required to be performed and
(2) the bases for the performance of this action?

A. (1) Standby Gas Treatment (SBGT)
(2) Ensures control room operators will receive ≤ 2 Rem TEDE

B. (1) Standby Gas Treatment (SBGT)
(2) Ensures control room operators will receive ≤ 5 Rem TEDE

C. (1) Control Room Emergency Ventilation (CREV)
(2) Ensures control room operators will receive ≤ 2 Rem TEDE

D. (1) Control Room Emergency Ventilation (CREV)
(2) Ensures control room operators will receive ≤ 5 Rem TEDE

Feedback

K/A: S295023G 2.04.49
Ability to perform without reference to procedures those actions that require immediate operation of system components and controls.
Refueling Accidents
(CFR: 41.10 / 43.2 / 45.6)

RO/SRO Rating: 4.6/4.4

Objective: CLS-LP-302-J*02
2. Given plant conditions with spent fuel damage and a high airborne activity problem in progress, determine if the appropriate automatic actions have occurred in accordance with 0AOP-5.0, Radioactive Spills, High Radiation, and Airborne Activity.

Reference:
0AOP-05, Revision 23, Page 2, Section 3.1

Cog Level: High

Explanation:
0AOP-05 immediate action for a dropped or damaged fuel assembly is to ENSURE CREVS is in operation.
The dose consequence calculation for the fuel handling accident does not credit the secondary containment or automatic CREVS start, however, it does assume that CREVS is manually initiated within 20 minutes of a dropped/damaged fuel assembly. Based on this analysis, Technical Specifications do not require secondary containment or CREVS automatic initiation instrumentation except during Modes 1, 2, or 3 or during operations with the potential to drain the Reactor vessel. The CREV System is designed to maintain a habitable environment in the CRE for a 30 day continuous occupancy after a DBA without exceeding 5 rem total effective dose equivalent (TEDE).
Knowledge of DBA analysis initial conditions.

Distractor Analysis:
Choice A: Plausible because *PROCESS RX BLDG VENT RAD HIGH* annunciator is easily confused with the auto start for SBGT verifing Auto actions can be confused with Immediate Actions. SBGT start is a supplemental action which will reduce control room dose and 2 Rem TEDE is a site administrative dose limit and can be confused with the actual Dose Analysis from FHA of 2.69 rem TEDE.

Choice B: Plausible because *PROCESS RX BLDG VENT RAD HIGH* annunciator is easily confused with the auto start for SBGT verifing Auto actions can be confused with Immediate Actions. SBGT start is a supplemental action which will reduce control room dose and 5 Rem TEDE is correct.

Choice C: Plausible because CREV is correct and 2 Rem TEDE is a site administrative dose limit and can be confused with the actual Dose Analysis from FHA of 2.69 rem TEDE.

Choice D: Correct Answer.

SRO Only Basis: Conditions and limitations in the facility license (43(b)(1)

Notes

AREA RAD REFUEL FLOOR HIGH

AUTO ACTIONS

NONE

CAUSE

1. High radiation level in the cask wash area.
2. Circuit malfunction.
3. Refueling cavity water seal failure.

OBSERVATIONS

1. ARM indicator and trip unit Upscale light illuminated on Panel H12-P600.

ACTIONS

1. Refer to EOP-03-SCCP, Table 3; enter EOP-03-SCCP as appropriate.
2. Refer to AOP-05.0, Radioactive Spills, High Radiation, and Airborne Activity.
3. Suspend refueling operation if due to fuel pool low level from refueling cavity water seal leakage.
4. If a circuit malfunction is suspected, ensure that a Trouble Tag is prepared.

DEVICE/SETPOINTS

ARM Channel 29 K2	40 mR/hr

POSSIBLE PLANT EFFECTS

1. Suspension of refuel floor activities.

REFERENCES

1. LL-9353 - 39
2. AOP-05.0
3. EOP-03-SCCP

PROCESS RX BLDG VENT RAD HIGH

AUTO ACTIONS

NONE

CAUSE

1. High airborne activity in Reactor Building ventilation exhaust plenum.
2. Circuit malfunction.

OBSERVATIONS

1. Reactor Building Vent Rad Recorder D12-RR-R605 Channel A or B indicates high radiation level.
2. Reactor Building Exhaust Plenum Rad Monitor Channel A or B indicates greater than 3 mR/hr on Panel H12-P606.

ACTIONS

1. Enter EOP-03-SCCP, Secondary Containment Control.
2. Refer to AOP-05.0, Radioactive Spills, High Radiation, and Airborne Activity.
3. If a circuit malfunction is suspected, ensure that a Trouble Tag is prepared.

DEVICE/SETPOINTS

D12-RR-R605 red or black pen	3 mR/hr

POSSIBLE PLANT EFFECTS

1. Possible release to environs.
2. If airborne activity increases to 4 mR/hr, Reactor Building HVAC isolation, a Group 6 isolation, drywell purge isolation, and initiation of the Standby Gas Treatment System will occur.

REFERENCES

1. LL-9353 - 35
2. AOP-05.0
3. EOP-03-SCCP
4. Plant Modification 85-081

1.0 SYMPTOMS

1.1 *AREA RAD REFUEL FLOOR HIGH* (UA-03 3-7) is in alarm.

1.2 *AREA RAD NEW FUEL STORAGE HIGH* (UA-03 4-7) is in alarm.

1.3 *PROCESS RX BLDG VENT RAD HI* (UA-03 4-5) is in alarm.

1.4 *TURB BLDG VENT RAD HIGH (UA-03 3-3)* is in alarm.

1.5 Area Radiation Monitor (ARM) is in alarm.

1.6 Continuous Air Monitor (CAM) is in alarm.

1.7 Turbine Building once-through effluent monitor indicates elevated (higher than expected or an unanticipated increase) activity.

1.8 Routine surveys indicate high radiation, contamination and/or airborne activity.

1.9 Report of spill, leak, or potential damage to new or spent fuel.

2.0 AUTOMATIC ACTIONS

2.1 **IF** *PROCESS RX BLDG VENT RAD HI-HI* (UA-03 3-5) is in alarm, **THEN** the following actions occur:

- Reactor Building Ventilation isolation ☐
- SBGTS auto start ☐
- Group 6 Isolation. ☐

3.0 OPERATOR ACTIONS

3.1 Immediate Actions

3.1.1 **IF** a fuel assembly was dropped or damaged, **THEN ENSURE** the Control Room Emergency Ventilation System (CREVS) is in operation. ☐

6.4.4.1.2 Fuel Handling Accident - Control Room Dose

Section 15.7.1 discusses the release of activity and its transport to the environment following a postulated fuel handling accident (FHA).

The design inputs utilized to evaluate the intake of this activity into the control room and to assess the resultant dose to the control room operators are tabulated in Table 6-28. A sensitivity study of unfiltered outside air inleakage into the control room was performed evaluating inleakage rates of 10,000 cfm (bounding case), 3000 cfm (control room design), and 0 cfm. Accident X/Q values are developed as

discussed in Section 15.9.2. Section 15.9.3 describes the parameters utilized in conjunction with the RADTRAD computer code (Reference 6-35) to convert the Alternative Source Term activity drawn into the control room during the postulated accident into a total effective dose equivalent (TEDE) dose.

The 30-day FHA dose to the control room operator from the internal cloud associated with the FHA is calculated to be 2.69 rem TEDE.

The onsite control room operator dose criterion established by Reference 6-36 for this accident is that the total control room operator dose should be less than the 10 CFR 50.67 guidelines; i.e., that the total dose should be less than 5 rem TEDE.

3.0 OPERATOR ACTIONS

3.2.3 **IF** new or spent fuel damage is suspected, **THEN PERFORM** the following:

1. **PLACE** any fuel that is being moved in a safe condition. ☐
2. **SECURE** further fuel movement. ☐
3. **EVACUATE** personnel from the following areas:
   - Refueling Floor ☐
   - Drywell, if occupied ☐
   - Reactor Building, -17' Elev., if Shutdown Cooling in service. ☐
   - ECCS Pipe Tunnel ☐
   - Any area determined to have the potential for high radiation. ☐
4. **ISOLATE** Secondary Containment. ☐
5. **START** Standby Gas Trains. ☐

3.2.4 **NOTIFY** E&RC to perform the following as necessary:

- Area radiation survey ☐
- Air sampling ☐
- Smear survey ☐
- Post the affected area as necessary ☐
- Control access to reduce exposure and contamination. ☐

4.0 GENERAL DISCUSSION

Liquid radioactive spills may be caused by valve packing leaks, leaky fittings, system leaks, or system draining evolutions. Liquids spills should be covered with an absorbent material to minimize the spread of contamination. Solid spills may be caused by leaks from the containers or process streams which handle radioactive material or by an accident during the transport of new or spent fuel, radioactive sources, or other solid radioactive materials. Solid spills should be covered by a damp material to minimize the spread of airborne contamination. A spill of highly radioactive solid materials such as spent resin, filter sludge, neutron sources, or irradiated reactor internal components may create a serious personnel exposure problem and should be handled with extreme caution. In addition, high radiation and high airborne activity may accompany a spill.

High airborne activity may occur from reactor coolant leaks, coolant spills, radwaste leaks, sampling, grinding, draining, and other maintenance. High airborne activity in the turbine buildings may require ventilation shutdown or realignment to the recirculation lineup if the ventilation systems are operating in the once-through lineup.

High radiation levels may be caused by radiation "streaming," loss of or degraded shielding, fuel element damage, high airborne activity, coolant spills, or radiography.

New or spent fuel damage may occur within the plant during fuel handling operations. Fuel may be damaged if it is inadvertently dropped or allowed to collide with objects. Damage may also be sustained if heavy objects (shipping casks, reactor vessel head, drywell head, etc.) are allowed to fall on the fuel. These accidents may release a substantial amount of radioactive noble gases, halogens, and other fission products into the secondary containment. The secondary containment will be automatically isolated due to high radiation at its ventilation exhaust plenum. Although Standby Gas Treatment (SBGT) System will reduce the activity released to the environs, there is a chance that technical specification limits may be exceeded.

The dose consequence calculation for the fuel handling accident does not credit the secondary containment or automatic CREVS start, however, it does assume that CREVS is manually initiated within 20 minutes of a dropped/damaged fuel assembly. Based on this analysis, Technical Specifications do not require secondary containment or CREVS automatic initiation instrumentation except during Modes 1, 2, or 3 or during operations with the potential to drain the Reactor vessel.

TABLE 6-28 Control Room Design Inputs – Design Basis Accidents

Control Room		
1.	Control room habitability volume	298,650 ft^3
2.	Assumed unfiltered inleakage*	10,000 cfm*
Control Room Ventilation		
1.	Normal mode operation – outside air intake	2,100 cfm
2.	Normal mode – roughing filter, aerosol removal	0%
3.	Normal mode – roughing filter, elemental iodine removal	0%
4.	Normal mode – roughing filter, organic iodine removal	0%
5.	Time of manual switchover from normal to radiation mode	20 minutes**
6.	Radiation mode operation – outside sir intake	1,500 cfm
7.	Radiation mode – HEPA filter, aerosol removal	95%
8.	Radiation mode – charcoal filter, elemental iodine removal	90%
9.	Radiation mode – charcoal filter, organic iodine removal	90%
10.	Radiation train – charcoal depth	2 inches
11.	Radiation mode – filtered recirculated air flow	400 cfm
12.	Radiation mode – aerosol iodine removal	95%
13.	Radiation mode – elemental iodine removal	90%
14.	Radiation mode – organic iodine removal	90%

NOTES

* Sensitivity cases using 3,000 cfm and 0 cfm unfiltered outside air inleakage into the control room were also evaluated. The 10,000 cfm unfiltered inleakage case is bounding for the LOCA, the FHA, and the CRDA events. For the MSLB event, 0 cfm unfiltered outside air inleakage represents the bounding value.

** For the MSLB event, a sensitivity study was performed, isolating the control room at various times between 5.5 seconds and 30 days.

BASES

BACKGROUND (continued)	The CREV System is designed to maintain a habitable environment in the CRE for a 30 day continuous occupancy after a DBA without exceeding 5 rem total effective dose equivalent (TEDE). A single CREV subsystem operating at a flow rate of ≤ 2200 cfm will slightly pressurize the CRE relative to outside atmosphere to minimize infiltration of air from surrounding areas adjacent to the CRE boundary. CREV System operation in maintaining CRE habitability is discussed in the UFSAR, Sections 6.4 and 9.4, (Refs. 1 and 2, respectively).
APPLICABLE SAFETY ANALYSES	The ability of the CREV System to maintain the habitability of the CRE is an explicit assumption for the design basis accident presented in the UFSAR (Ref. 3). The radiation/smoke protection mode of the CREV System is assumed (explicitly or implicitly) to operate following a DBA. The radiological doses to the CRE occupants as a result of a DBA are summarized in Reference 3. Postulated single active failures that may cause the loss of outside or recirculated air from the CRE are bounded by BNP radiological dose calculations for CRE occupants.

Categories

K/A:	S295023G 2.04.49	Tier / Group:	T1G1
RO Rating:	4.6	SRO Rating:	4.4
LP Obj:	CLS-LP-302-J*02	Source:	NEW
Cog Level:	HIGH	Category 8:	

88. An event on Unit One has resulted in the following plant conditions:

Reactor pressure	1000 psig
Reactor Water Level	120 inches
Control Rod Positions	All unknown
APRMs	Downscale
Drywell pressure	3 psig
Supp. Pool pressure	2 psig
Supp. Pool water temp	150° F
Supp. Pool water level	-4 feet

(Reference provided)

Which one of the following identifies the status of the Heat Capacity Temperature Limit (HCTL) and the required procedure for reactor pressure control?

	HCTL	Pressure Control Leg of Procedure
A.	has been exceeded	RVCP
B.	has been exceeded	LPC
C.	has NOT been exceeded	RVCP
D.	has NOT been exceeded	LPC

Feedback

K/A: S295026 A2.03
Ability to determine and/or interpret the following as they apply to SUPPRESSION POOL HIGH WATER TEMPERATURE:
Reactor pressure
(CFR: 41.10 / 43.5 / 45.13)

RO/SRO Rating: 3.9/4.0

Objective: CLS-LP-300-L*05a
05. Given the PCCP, determine the appropriate actions if any of the following limits are approached or exceeded:
    a. Heat Capacity Temperature Limit.

Reference:
Heat Capacity Temperature Graph only is given to examinee
PCCP.

Cog Level: High

Explanation:
HCTL has been exceeded. With rods unknown the operator would be in LPC.

Distractor Analysis:
Choice A: Plausible because rods are unknown, would be in LPC.

Choice B: Correct Answer

Choice C: Plausible because HCTL has been exceeded. rods are unknown, would be in LPC

Choice D: Plausible because HCTL has been exceeded.

SRO Only Basis: Assessment of facility conditions and selection of appropriate procedures during normal, abnormal, and emergency situations (43(b)(5)

Notes

FIGURE 3

Heat Capacity Temperature Limit

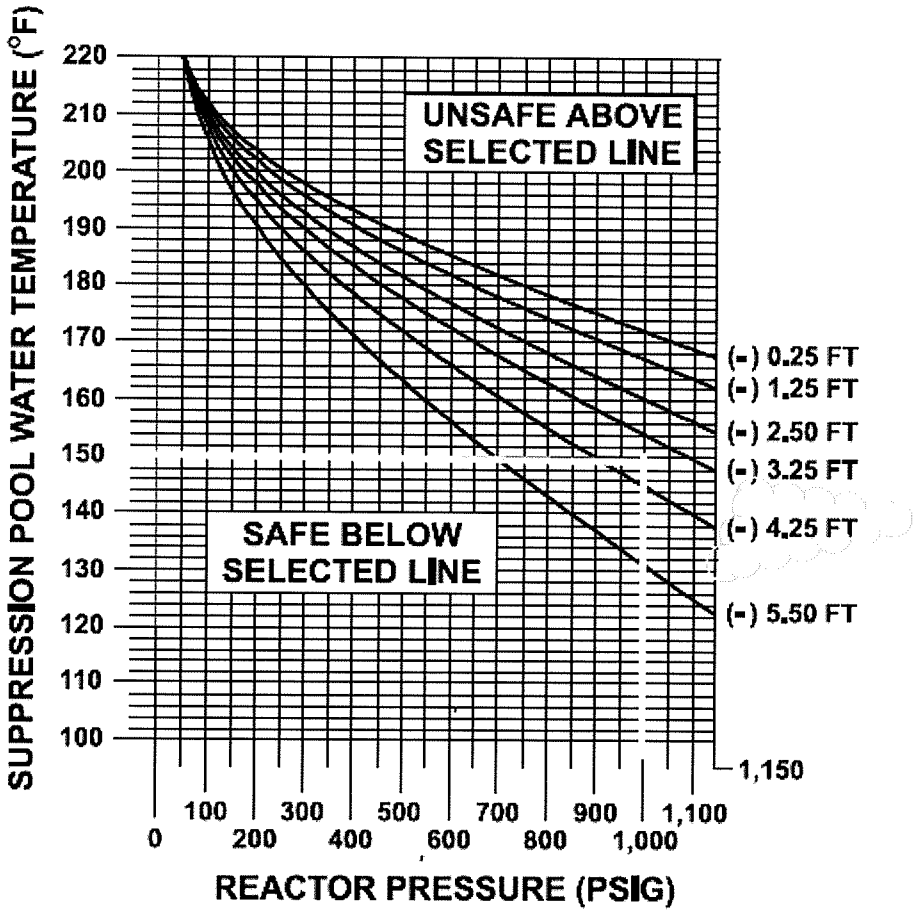

SUPPRESSION POOL WATER TEMPERATURE IS DETERMINED BY:

- CAC-TR-4426-1A, POINT WTR AVG **OR**
- CAC-TR-4426-2A, POINT WTR AVG **OR**
- COMPUTER POINT G050 **OR**
- COMPUTER POINT G051 **OR**
- CAC-TY-4426-1 **OR**
- CAC-TY-4426-2

SELECT GRAPH LINE IMMEDIATELY BELOW SUPPRESSION POOL WATER LEVEL AS THE LIMIT.

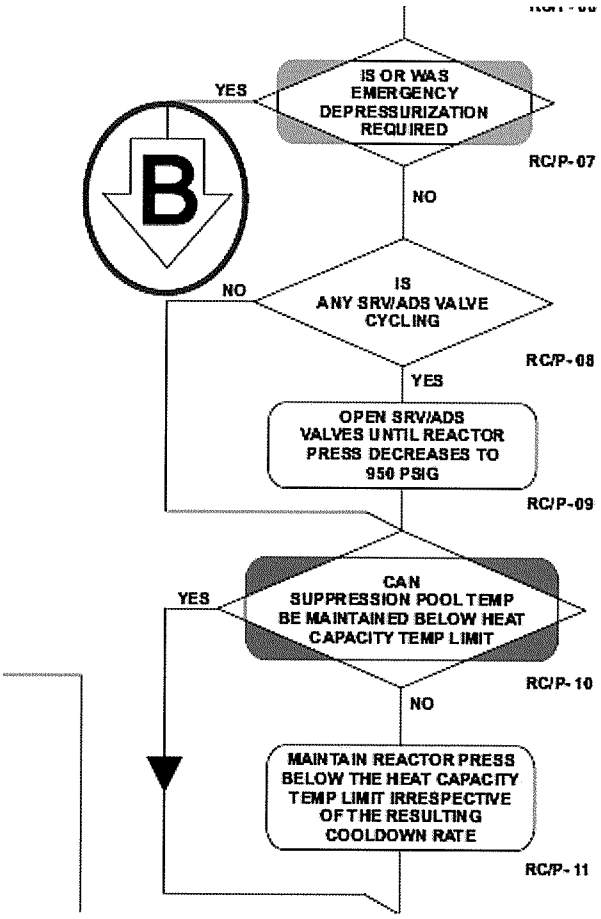

BNP VOL-VI 1EOP-01-LPC
REVISION NO: 9

UNIT 1 ONLY

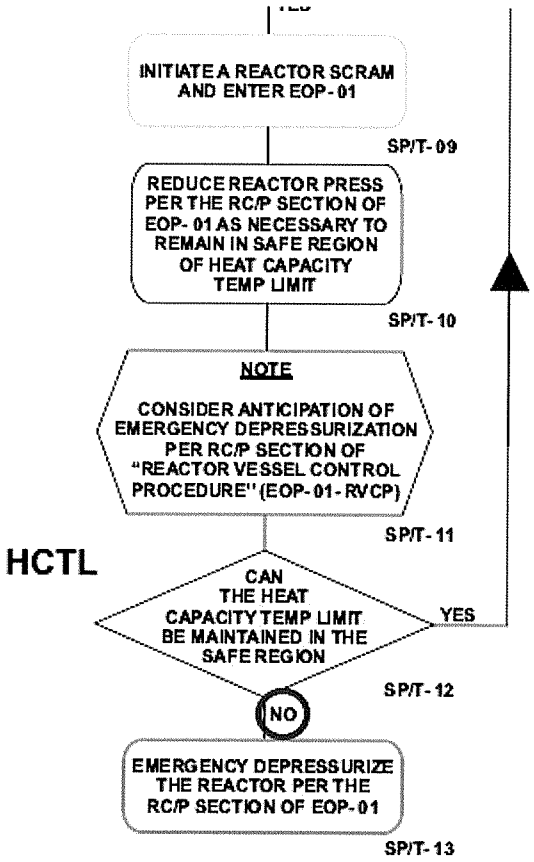

BNP VOL-VI 0EOP-02-PCCP
REVISION NO: 10

Categories

K/A:	S295026 A2.03	Tier / Group:	T1G1
RO Rating:	3.9	SRO Rating:	4.0
LP Obj:	CLS-LP-300-L*05A	Source:	PREV
Cog Level:	HIGH	Category 8:	Y

89. Unit Two is operating at rated power when half of the Drywell (DW) Coolers are lost.

Which one of the following correctly completes the statements below?
(Assume initial DW and Suppression Pool pressures are equal)

As DW temperature rises, Suppression Pool pressure will rise at __(1)__ DW pressure. If DW Air Temperature is not restored to within the LCO limit in __(2)__ hours, the Unit is required to be in Mode 3 within the following 12 hours per TS 3.6.1.4 (Drywell Air Temperature).

A. (1) the same rate as
   (2) 8

B. (1) the same rate as
   (2) 12

C. (1) a slower rate than
   (2) 8

D. (1) a slower rate than
   (2) 12

Feedback

K/A: S295028 A2.05
Ability to determine and/or interpret the following as they apply to HIGH DRYWELL TEMPERATURE :
Torus/suppression chamber pressure: Plant-Specific
(CFR: 41.10 / 43.5 / 45.13)

RO/SRO Rating: 3.6/3.8

Objective: CLS-LP-004-A*15a
15. Given plant conditions, determine the effects that the following will have on the Primary Containment, Primary Containment Ventilation and Primary Containment Monitoring:
    a. Loss of Drywell cooling.

Reference:
SD-04, Revision 5, Page 25
TS

Cog Level: High

Explanation:
Reduced DW cooling or rising DW temperature results in DW pressure increases whose severity is dependent upon plant conditions. 0AOP-14.0, Abnormal Primary Containment Conditions provides guidance on indications to be monitored and actions to be taken which include verification of cooling system lineups and reductions in power to maintain average temperature below 150°F. Failure to accomplish this may require entry into the 0EOP-02-PCCP Primary Containment Control.
Elevated DW temperature causes DW pressure to rise. As DW pressure rises, SP water level rises causing a rise in SP pressure. Due to the downcomers extending 3 feet below the surface of the SP water level a differential pressure will always exist. Temperature response is different from LOCA response due to steam AND non-condensibles being forced into the SP - steam condensing and non-condensibles collecting in SP air space.

TS 3.6.1.4 (DW Air Temperature) limit of ≤ 150°F, CONDITION A - Drywell average air temperature not within limit, REQUIRED ACTION A.1 Restore drywell average air temperature to within limit has a COMPLETION TIME of 8 hours. If temperature is not restored to ≤ 150°F, CONDITION B, REQUIRED ACTION B.1 Be in MODE 3 has a COMPLETION TIME of 12 hours.

Distractor Analysis:
Choice A: Plausible because SP pressure is changed by the change in SP level only vs pressure, steam, and non-condensibles during a LOCA. The SP air space temperature is in equilibrium with SP water temperature (95°Fmax during normal operations) rising DW pressure would have a direct impact on SP level. However during temperature only (no steam), the DW pressure increase is cushioned by SP water, small changes in SP water level provides small change in SP pressure. 8 hours to restore temperature is correct.

Choice B: Plausible because SP pressure is changed by the change in SP level only vs pressure, steam, and non-condensibles during a LOCA. The SP air space temperature is in equilibrium with SP water temperature (95°Fmax during normal operations) rising DW pressure would have a direct impact on SP level. However during temperature only (no steam), the DW pressure increase is cushioned by SP water, small changes in SP water level provides small change in SP pressure. 12 hours is the time required to get to MODE 3 if not restored within the required Completion Time.

Choice C: Correct Answer

Choice D: Plausible because rising at a slower rate is correct and 12 hours is the time required to get to MODE 3 if not restored within the required Completion Time.

SRO Only Basis: Application of required actions (Section 3) and surveillance requirements (Section 4) in accordance with rules of application requirements (Section 1). (43(b)(2)

3.6 CONTAINMENT SYSTEMS

3.6.1.4 Drywell Air Temperature

LCO 3.6.1.4 Drywell average air temperature shall be ≤ 150°F.

APPLICABILITY: MODES 1, 2, and 3.

ACTIONS

CONDITION	REQUIRED ACTION		COMPLETION TIME
A. Drywell average air temperature not within limit.	A.1	Restore drywell average air temperature to within limit.	8 hours
B. Required Action and associated Completion Time not met.	B.1	Be in MODE 3.	12 hours
	AND		
	B.2	Be in MODE 4.	36 hours

4. Drywell Temperature

A loss of RBCCW to the drywell results in drywell temperature and pressure increases whose severity is dependent upon plant conditions. 0AOP-14.0, Abnormal Primary Containment Conditions provides guidance on indications to be monitored and actions to be taken which include verification of cooling system lineups and reductions in power to maintain average temperature below 150°F. Failure to accomplish this may require entry into the 0EOP-02-PCCP Primary Containment Control.

Loss of RBCCW to the Drywell due to all RBCCW pumps tripping

Categories

K/A:	S295028 A2.05	Tier / Group:	T1G1
RO Rating:	3.6	SRO Rating:	3.8
LP Obj:	CLS-LP-004-A*15A	Source:	NEW
Cog Level:	HIGH	Category 8:	YF

90. The following plant conditions exist on Unit Two:

- An ATWS with a spurious Group I Isolation has occurred
- HPCI is injecting to the RPV to maintain RPV level
- *SUPPRESSION CHAMBER LVL HI-HI* is in alarm

Which one of the following identifies the action required for long term HPCI system operation and the reason for this action?

When suppression pool temperature reaches 140°F, __(1)__ to prevent __(2)__.

A. (1) lower HPCI flow to less than 2000 gpm IAW LPC
(2) pump bearing damage

B. (1) lower HPCI flow to less than 2000 gpm IAW LPC
(2) a loss of NPSH

C. (1) defeat the automatic suction transfer logic and transfer HPCI suction to the CST IAW SEP-10
(2) pump bearing damage

D. (1) defeat the automatic suction transfer logic and transfer HPCI suction to the CST IAW SEP-10
(2) a loss of NPSH

Feedback

K/A: 295029 G2.01.07
Ability to evaluate plant performance and make operational judgments based on operating characteristics, reactor behavior, and instrument interpretation.
High Suppression Pool Water Level
(CFR: 41.5 / 43.5 / 45.12 / 45.13)

RO/SRO Rating: 4.4/4.7

Objective:
LOI-CLS-LP-019-A, 26g: Given plant conditions and one of the following events, use plant procedures to determine the actions required to control and/or mitigate the consequences of the event:
High Suppression Pool water level.

Reference:
0OI-37.5
SUPPRESSION CHAMBER LVL HI-HI APP

Cog Level - High

Explanation: HPCI system is normally aligned to the CST, with the torus high water level this transfers to the torus. this meets the KA by having to evaluate the suction path has transferred to the torus and the operational implications of the high torus tempeature on continued operation of the HPCI system. this requires the suction to be transferred back to the CST IAW SEP-10.

From : The lube oil and control oil for both HPCI and RCIC are cooled by the water being pumped. Very high lube oil temperatures can result in loss of lubricating qualities in the oil and thus cause damage to the bearings. Suction for HPCI and RCIC is aligned to the Condensate Storage Tank (CST) if it is available. The HPCI automatic suction transfer logic can be defeated to allow this lineup if necessary provided suppression pool temperature is approaching 140°F.

Distractor Analysis:
Choice A: Plausible because reducing flow would be a correct action if HPCI NPSH was the concern. At high temperatures with low level in the torus this could be a correct action. Pump bearing damage is a correct statement.

Choice B: Plausible because reducing flow would be a correct action if HPCI NPSH was the concern. At high temperatures with low level in the torus this could be a correct action. a loss of NPSH would be correct for the reason to reduce flow.

Choice C: Correct answer, see explanation

Choice D: Plausible because transferring the suction is correct but the concern is for pump bearing damage.

SRO Basis: 10 CFR 55.43(b)-5 Assessment of facility conditions and selection of appropriate procedures during normal, abnormal, and emergency situations.

Notes

TABLE 1

MAXIMUM SYSTEM INJECTION PRESSURES

SYSTEM	MAXIMUM INJECTION PRESSURE (PSIG)
CONDENSATE/FEEDWATER	1250
CRD FLOW MAY BE MAXIMIZED PER EOP-01-SEP-09	1400
RCIC WITH SUCTION FROM CST IF AVAILABLE. DEFEAT LOW REACTOR PRESS AND HIGH AREA TEMPERATURE ISOLATION LOGIC IF NECESSARY PER "CIRCUIT ALTERATION PROCEDURE" (EOP-01-SEP-10)	1190
HPCI WITH SUCTION FROM CST IF AVAILABLE. DEFEAT HPCI HI SUPPRESSION POOL LEVEL SUCTION TRANSFER AND HIGH AREA TEMPERATURE ISOLATION LOGIC IF NECESSARY PER "CIRCUIT ALTERATION PROCEDURE" (EOP-01-SEP-10)	1280
LPCI - ESTABLISH RHR SERVICE WATER FLOW AS SOON AS POSSIBLE	200

CAUTION

OPERATION OF HPCI OR RCIC WITH SUCTION TEMPERATURES ABOVE 140°F MAY RESULT IN EQUIPMENT DAMAGE

RC/L-23

Distractor plausibility:

CAUTION

HPCI FLOW ABOVE 2000 GPM WITH SUCTION FROM CST AND CST LEVEL BELOW 5 FEET MAY RESULT IN VORTEXING AND EQUIPMENT DAMAGE

RC/L-22

Categories

K/A:	295029 G2.01.07	Tier / Group:	T1G2
RO Rating:	4.4	SRO Rating:	4.7
LP Obj:	19-A 26G	Source:	BANK
Cog Level:	HIGH	Category 8:	

91. Which one of the following identifies the controlling document and the required action to be taken if SJAE Offgas Radiation monitor readings increase 50% during steady state rated power operation?

Notify E&RC to perform the Surveillance / Test Requirement (SR/TR) required by __(1)__, which confirms the SJAE release rate is within limits within __(2)__ following the monitor reading increase.

A. (1) ODCM 7.3.2, Radioactive Gaseous Effluent Monitoring Instrumentation
   (2) 4 hours

B. (1) ODCM 7.3.2, Radioactive Gaseous Effluent Monitoring Instrumentation
   (2) 12 hours

C✓ (1) T.S. 3.7.5, Main Condenser Offgas
   (2) 4 hours

D. (1) T.S. 3.7.5, Main Condenser Offgas
   (2) 12 hours

Feedback

K/A: S295038G 2.02.42
Ability to recognize system parameters that are entry-level conditions for Technical Specifications.
High Off-Site Release Rate
(CFR: 41.7 / 41.10 / 43.2 / 43.3 / 45.3)

RO/SRO Rating: 3.9/4.6

Objective: CLS-LP-30*08
08. Given plant conditions and Technical Specifications, including the Bases, TRM, ODCM, and COLR, determine whether given plant conditions meet minimum Technical Specifications, TRM, or ODCM requirements associated with the Condenser Air Removal/Augmented Offgas System.

Reference:
1OI-03.1, Revision 10, Page 44, Item #57 (CODSR)

Cog Level: High

Explanation:
NOTIFY E&RC to confirm release rate is within limits within 4 hours following a monitor reading increase of greater than or equal to 50% without an accompanying increase in thermal power. SR 3.7.5.1

Distractor Analysis:
Choice A: Plausible because the SJAE Rad Monitor operability is required by ODCM 7.3.2 and 4 hours is correct.

Choice B: Plausible because the SJAE Rad Monitor operability is required by ODCM 7.3.2 and 12 hours is a timeframe for another Required Action in this spec.

Choice C: Correct Answer

Choice D: Plausible because TS 3.5.7 is correct and 12 hours is a timeframe for another Required Action in this spec.

SRO Only Basis: Application of Surveillance Requirements and timeframe greater than 1 hour.

Notes

ITEM NO.	SHIFT CHECK LIST	NOTES	OPER MODE	FREQ	TIME	TS/OPER LIMITS
57	**RECORD** *SJAE OFFGAS RAD MONITOR D12-RM-K601A.* **NOTIFY** E&RC to confirm release rate is within limits within 4 hours following a monitor reading increase of greater than or equal to 50% without an accompanying increase in thermal power. SR 3.7.5.1	DD	1, 2*, 3*	b	07-13 13-19	
58	**RECORD** *SJAE OFFGAS RAD MONITOR D12-RM-K601B.* **NOTIFY** E&RC to confirm release rate is within limits within 4 hours following a monitor reading increase of greater than or equal to 50% without an accompanying increase in thermal power. SR 3.7.5.1	DD	1, 2*, 3*	b	07-13 13-19	
59	**PERFORM** channel check utilizing the calculation on Table 1 *SJAE OFF-GAS RAD MONITORS D12-RM-K601A* and *B* ODCM TR 7.3.2-1 Function 8, TR 7.3.2.1		*8	c	07-13	Reference calculation on Table 1
60	**PERFORM** channel check on *SERVICE WATER EFFLUENT RAD MONITOR D12-RM-K605,* ODCM Table 7.3.1-1, Function 3, TR 7.3.1.1	R	8	c	07-13	channel operable
61	**PERFORM** channel check on *RADWASTE EFFLUENT RAD MONITOR D12-RM-K604* on Control Room Panel 2-H12-P604 with recorder *D12-R001* on XU-3, ODCM Table 7.3.1-1, Item 1, TR 7.3.1.1		8	c	07-13	channel operable

*During operation of the main condenser air ejector.

SHIFT Dayshift

BRUNSWICK STEAM ELECTRIC PLANT
DAILY SURVEILLANCE REPORT
CONTROL OPERATORS

3.7 PLANT SYSTEMS

3.7.5 Main Condenser Offgas

LCO 3.7.5 The gross gamma activity rate of the noble gases measured at the main condenser air ejector shall be ≤ 243,600 µCi/second after decay of 30 minutes.

APPLICABILITY: MODE 1,

MODES 2 and 3 with any main steam line not isolated and steam jet air ejector (SJAE) in operation.

ACTIONS

CONDITION	REQUIRED ACTION		COMPLETION TIME
A. Gross gamma activity rate of the noble gases not within limit.	A.1	Restore gross gamma activity rate of the noble gases to within limit.	72 hours
B. Required Action and associated Completion Time not met.	B.1	Isolate all main steam lines.	12 hours
	OR		
	B.2	Isolate SJAE.	12 hours
	OR		
	B.3.1	Be in MODE 3.	12 hours
	AND		
	B.3.2	Be in MODE 4.	36 hours

SURVEILLANCE REQUIREMENTS

SURVEILLANCE		FREQUENCY
SR 3.7.5.1	----------NOTE---------- Not required to be performed until 31 days after any main steam line not isolated and SJAE in operation. ----------	
	Verify the gross gamma activity rate of the noble gases is ≤ 243,600 μCi/second after decay of 30 minutes.	31 days AND Once within 4 hours after a ≥ 50% increase in the nominal steady state fission gas release after factoring out increases due to changes in THERMAL POWER level

Table 7.3.2-1 (page 2 of 4)
Radioactive Gaseous Effluent Monitoring Instrumentation

	FUNCTION [a]	APPLICABLE MODES OR OTHER SPECIFIED CONDITIONS	REQUIRED CHANNELS PER FUNCTION	CONDITIONS REFERENCED FROM REQUIRED COMPENSATORY MEASURES A.1	TEST REQUIREMENTS	ALARM/ TRIP SETPOINT VALUE
2.	Reactor Building Ventilation Monitoring System (continued)					
	e. Sampler Flow Rate Measurement Device	At all times	1	D	TR 7.3.2.1 TR 7.3.2.6 TR 7.3.2.10	(c)
3.	Turbine Building Ventilation Monitoring System					
	a. Noble Gas Activity Monitor	At all times	1	B	TR 7.3.2.1 TR 7.3.2.3 TR 7.3.2.5 TR 7.3.2.10	(b)
	b. Iodine Sampler Cartridge	At all times	1	C	TR 7.3.2.2	NA
	c. Particulate Sampler Filter	At all times	1	C	TR 7.3.2.2	NA
	d. System Effluent Flow Rate Measurement Device	At all times	1	D	TR 7.3.2.1 TR 7.3.2.6 TR 7.3.2.10	NA
	e. Low Range Sampler Flow Rate Measurement Device	At all times	1	D	TR 7.3.2.1 TR 7.3.2.6 TR 7.3.2.10	(c)
	f. Mid/High Range Sampler Flow Rate Measurement Device	(m)	1	D	TR 7.3.2.10	NA
4.	Main Condenser Off-Gas Treatment System Noble Gas Activity Monitor [d] (Downstream of AOG Treatment System)	(e)	1	B	TR 7.3.2.1 TR 7.3.2.3 TR 7.3.2.6 TR 7.3.2.10	(b)

(continued)

(a) Specific instrumentation identification numbers are provided in Appendix E.

(b) Alarm/trip setpoints shall be determined in accordance with ODCM methodology and set to ensure the limits of ODCMS 7.3.7, "Dose Rate—Gaseous Effluents," are not exceeded.

(c) Alarm/trip setpoints shall be determined in accordance with associated design specification(s) and set to ensure the limits of ODCMS 7.3.7, "Dose Rate—Gaseous Effluents," are not exceeded.

(d) Provides alarm.

(e) During Main Condenser Off-Gas Treatment System operation

(m) During Mid/High Range System operation

Categories

K/A:	S295038G 2.02.42	Tier / Group:	T1G1
RO Rating:	3.9	SRO Rating:	4.6
LP Obj:	CLS-LP-30*08	Source:	NEW
Cog Level:	HIGH	Category 8:	Y

92. The following plant conditions exist on Unit Two due to a malfunction of the Air Dryer:

- *SERVICE AIR PRESS-LOW* is in alarm
- *RB INSTR AIR RECEIVER 2A PRESS LOW* is in alarm
- *RB INSTR AIR RECEIVER 2B PRESS LOW* is in alarm
- Instrument Air pressure is 93 psig and recovering

Based on the above indications, which one of the following correctly identifies:
(1) the status of the Service Air Dryer Bypass Valve, SA-PV-5067, and
(2) the procedure that contains the steps to close the Reactor Building Inboard and Outboard Isolation Valves (BFIVs)?

A.✓ (1) open
(2) 0AOP-20.0, Pneumatic (Air/Nitrogen) System Failures

B. (1) open
(2) 2APP-UA-01, *Service Air Press-Low*

C. (1) closed
(2) 0AOP-20.0, Pneumatic (Air/Nitrogen) System Failures

D. (1) closed
(2) 2APP-UA-01, *Service Air Press-Low*

Feedback

K/A: 300000 A2.01
Ability to (a) predict the impacts of the following on the INSTRUMENT AIR SYSTEM and (b) based on those predictions, use procedures to correct, control, or mitigate the consequences of those abnormal operation:
Air dryer and filter malfunctions
(CFR: 41.5 / 45.6)

RO/SRO Rating: 2.9/2.8

Objective:
CLS-LP-46, 07i: Given plant conditions, determine if the following automatic actions should occur: Air Dryer is bypassed.
CLS-LP-037.1, 8b: State how the RBHVAC is affected by the following: Loss of Instrument Air.

Reference:
RB INSTR AIR RECEIVER 2B PRESS LOW (UA-01 1-2)
SERVICE AIR PRESS LOW (UA-01 5-4)
0AOP-20, Pneumatic (Air/Nitrogen) System Failures

Cog Level: High

Explanation:
The air dryer malfunction has caused air pressure to lower. The Service Air low pressure alarms comes in at 107 psig. At 105# decreasing the Service Air system isolates, thus the 0 psig indication on Service Air. The alarms for the receivers low pressure come in at 95# and are located in the Reactor Building. With these alarms in the operators are required to close the BFIVs while there is still sufficient air pressure remaining to make the secondary containment isolation valves close in accordance with the AOP supplemental actions.

Distractor Analysis:
Choice A: Correct answer; The air dryer bypass valve opens at 98# and dropping and the steps are in the AOP for closing the BFIVs.

Choice B: Plausible because the air dryer bypass valve is open, but the guidance for closure of the BFIVs is contained in the AOP or *RB INSTR AIR RECEIVER 2A(B) PRESS LOW* APP.

Choice C: Plausible because the AOP is the correct procedure for closure of the BFIVs, but the air dryer bypass valve would be open (requires system knowledge to know the setpoint for the bypass opening).

Choice D: Plausible because the student may not know the setpoint of the bypass valve opening and the guidance for closure of the BFIVs is contained in the AOP or *RB INSTR AIR RECEIVER 2A(B) PRESS LOW* APP.

SRO Basis: 10 CFR 55.43(b)-5 Assessment of facility conditions and selection of appropriate procedures during normal, abnormal, and emergency situations.

The first part of the question is RO knowledge (setpoint for the auto opening of the air dryer bypass valve the second part is Assessing plant conditions (normal, abnormal, or emergency) and then prescribing a procedure to mitigate, recover, or with which to proceed.

Notes

4. **IF** *RB INSTR AIR RECEIVER 1A(2A) PRESS LOW* (UA-01 1-1) **OR** *RB INSTR AIR RECEIVER 1B(2B) PRESS LOW* (UA-01 1-2) alarm is received, **THEN PERFORM** the following:

NOTE:	Isolation of the Reactor Building supply and exhaust dampers will render the building ventilation system inoperable. Consideration should be given for starting the Standby Gas Treatment System to ensure the Reactor Building differential pressure remains negative.

a. IF necessary, **THEN START** the Standby Gas Treatment System. ☐

NOTE:	Local "Tee Handles" may be used to close the Reactor Building Isolation Dampers if insufficient control air is available. 1(2)OP-37.1 provide instructions for manual operation of Reactor Building Isolation Valves.

b. **CLOSE** the following dampers:

- *RB VENT INBD VALVES, 1A(2A)-BFIV-RB* and *1C(2C)-BFIV-RB* ☐
- *RB VENT OUTBD VALVES, 1B(2B)-BFIV-RB* and *1D(2D)-BFIV-RB* ☐

AIR DRYER 2A TROUBLE

AUTO ACTIONS

1. Service air dryer bypass valve SA-PV-5067 will begin to open if service air header pressure decreases to 98 psig.
2. If control power is lost or interrupted the dryer will fail safe, providing continued air flow through one tower.
3. If a dryer tower moisture sensing probe related fault or malfunction occurs, the dryer control system will default to a 4 hour drying cycle.

RB INSTR AIR RECEIVER 2B PRESS LOW

AUTO ACTIONS

1. Standby Instrument Air Compressor 2B starts and loads.
2. High Pressure Bottle Rack Isolation Valve, RNA-SV-5481 opens, supplying SRV's and CAC-V17 with a pneumatic source.

CAUSE

1. Low air pressure (95 psig) in instrument air receiver 2B.
2. Loss of plant air compressors.
3. Instrument air pipe rupture or air leak.
4. Circuit malfunction.

OBSERVATIONS

1. Standby compressor starts automatically and loads (it will unload at 105 psig).
2. Service air header may have isolated.
3. Pressure Indicator 2-RNA-PI-5268 (XU-51) indicates approximately 100 psig.

ACTIONS

1. Check that standby compressor is running.
2. Check to see if instrument air pressure is maintaining or increasing above 95 psig.
3. Check plant compressors.
4. Check for instrument air ruptures.
5. Isolate any instrument air piping leaks or ruptures.
6. Isolate nonessential air supplies in order to maintain more than 95 psig on instrument header.
7. Ensure the High Pressure Bottle Rack Isolation Valve, RNA-SV-5481 (XU-51) opens.
8. If a circuit malfunction is suspected, ensure that a WR/JO is prepared.
9. If secondary containment isolation is required, close secondary containment isolation valves 2B-BFIV-RB and 2D-BFIV-RB prior to accumulator air pressure bleedoff.

Categories

K/A:	300000 A2.01	Tier / Group:	T2G1
RO Rating:	2.9	SRO Rating:	2.8
LP Obj:	46-7I	Source:	NEW
Cog Level:	HIGH	Category 8:	Y

93. Unit Two is operating at power with Reactor Recirculation Loop A isolated due to abnormal seal leakage. A fire in the reactor building occurs and the Site Incident Commander has requested that MCC 2XA-2 be de-energized for fire suppression.

Which one of the following identifies the impact that deenergizing MCC 2XA-2 has on RHR Loop A availability and the procedure which provides this guidance under the above plant conditions?

Deenergizing MCC 2XA-2 will make RHR Loop A Inoperable but Available provided that the 2-E11-F015A, Inboard Injection Vlv, __(1)__ to support LPCI IAW __(2)__.

A. (1) is maintained (de-energized) opened
   (2) 0AP-025, BNP Integrated Scheduling

B. (1) is maintained (de-energized) opened
   (2) 0OI-01.08, Control of Equipment and System Status

C✓ (1) has a Dedicated Operator is assigned for manual operation
   (2) 0AP-025, BNP Integrated Scheduling

D. (1) has a Dedicated Operator is assigned for manual operation
   (2) 0OI-01.08, Control of Equipment and System Status

Feedback

K/A: S600000G 2.02.37
Ability to determine operability and/or availability of safety related equipment.
Plant Fire On Site
(CFR: 41.7 / 43.5 / 45.12)

RO/SRO Rating: 3.6/4.6

Objective: CLS-LP-

Reference:
0AP-025, Revision 39, Page 9, Section 3.1

Cog Level: High

Explanation:
Requires knowledge of equipment powered from MCC 2XA-2 (opposite Unit power E5). With the RR Loop A isolated (RR Discharge and Disch Bypass valves will be close - required for LPCI) and F015A (located in ECCS Pipe Tunnel - RB 20') can be manually opened by a dedicated operator. 0OI-01.08 has recently been revised to support implementation of OPS-NGGC-1000, Fleet Conduct of Operations. Risk assessment and equipment removal from service guidance has been removed from OI-01.08.

Distractor Analysis:
Choice A: Plausible because if the valve is de-energized in its intended state (such as a PCIV in the closed dierection) this could be considered correct although for this case the open direction for this normally closed valve would have to have interlocks defeated to have both the F015 and F017 both open (potential to pressurize low pressure piping). 0AP-025 is correct.

Choice B: Plausible because if the valve is de-energized in its intended state (such as a PCIV in the closed dierection) this could be considered correct although for this case the open direction for this normally closed valve would have to have interlocks defeated to have both the F015 and F017 both open (potential to pressurize low pressure piping). 0OI-01.08 no longer provides guidance for evaluating MR/PSA system availability.

Choice C: Correct Answer

Choice D: Plausible because RHR Loop is available and 0OI-01.08 no longer provides guidance for evaluating MR/PSA system availability.

SRO Only Basis: Knowledge of administrative procedures that specify implementation, and/or coordination of plant normal procedures.

Notes

3.0 DEFINITIONS

3.1 Available (Availability)

The status of a system, structure or component (SSC) that is OPERABLE, in service or can be placed in a FUNCTIONAL state within a reasonably short period of time consistent with its intended need. The SSC must be capable of meeting all of its most limiting requirements for the plant mode under consideration. Using a manual means for placing an SSC in service requires a dedicated operator assigned to be cognizant of the SSC along with a written procedure for its restoration. A "dedicated" operator for the purpose of this definition is one who is specifically assigned the task and available, as necessary, to perform the required actions.

3.2 Backbone Schedule

A preliminary schedule consisting of work items that are either required to be performed or have been designated by management as high priority items. The following items would normally comprise the backbone schedule:

- Implementing Supervisor recommendations
- Key/(a)(1) Equipment priority action items
- Required Surveillances/PMs
- System Outages
- Committed Items – Priority 1 & 2 CAPR's, CORR's, and regulatory committed items
- Modification EC's determined a priority by Engineering representative or Scheduler (must be ready to work with work orders in ready or approved status)
- Engineering recommendations
- Reactivity Management flagged Work Orders

3.3 Compensatory Actions

Measures that are used to mitigate the impact and minimize the duration of an ELEVATED RISK activity. These measures may include CONTINGENCY PLANS or procedural controls.

3.4 Contingency Planning

A look ahead process whereby potential problems are systematically identified, assessed, and addressed by adding plans or mitigating actions. The necessity for a contingency plan is based on the potential consequences as well as the probability of a problem occurring.

480V Substation E5/MCC/Panel Load Summary

Load: 480V Motor Control Center 2-2XA-2
Location: Unit 2 Reactor Building 20' NE
Drawing Reference: F-03049
Upstream Power Source: **480V Substation E5**

COMPT	LOAD DESCRIPTION	EFFECTS ON LOSS OF POWER
DF5	RHR Outboard Injection Valve 2-E11-F017A (TS 3.5.1, 3.6.1.3, 3.5.2, 3.3.3.1)	Loss of load
DF3	RHR Inboard Injection Valve 2-E11-F015A (TS 3.5.1, 3.6.1.3, 3.5.2, 3.3.3.1)	Loss of load
DG0	RHR Torus Spray Valve 2-E11-F028A (TS 3.5.1, 3.6.1.3, 3.6.2.3, 3.3.3.1)	Loss of load
DD7	Rx Recirculation Pump 2A Discharge Valve 2-B32-F031A (TS 3.4.1, 3.5.1)	Loss of load
DD8	Rx Recirculation Pump 2A Discharge Bypass Valve 2-B32-F032A (TS 3.4.1, 3.5.1)	Loss of load

Residual Heat Removal System Loop A Panel Lineup

Number	Description	Position/ Indication	Checked	Verified
Loop A Control Room - Panel H12-P601				
E11-F006C	Pump C Shutdown Cooling Suction Vlv	CLOSED		
E11-F006A	Pump A Shutdown Cooling Suction Vlv	CLOSED		
E11-V32	Check Valve Bypass Vlv	CLOSED		
E11-F017A	Outboard Injection Vlv	OPEN		
E11-F016A	Drywell Spray Otbd Isol Vlv	CLOSED		
E11-F104A	HX 2A Inboard Vent Vlv	CLOSED		
E11-F015A	Inboard Injection Vlv	CLOSED		
E11-F021A	Drywell Spray Inbd Isol Vlv	CLOSED		
E11-F103A	HX 2A Outboard Vent Vlv	CLOSED		
E11-F024A	Torus Cooling Isol Vlv	CLOSED		
E11-F048A	HX 2A Bypass Vlv	OPEN		
E11-F027A	Torus Spray Isol Vlv	CLOSED		
E11-F011A	HX 2A Drain To Torus Vlv	CLOSED		
E11-F004C	Pump C Torus Suction Vlv	OPEN		
E11-F028A	Torus Discharge Isol Vlv	CLOSED		
E11-F026A	HX 2A Drain To RCIC Vlv	CLOSED		
E11-F004A	Pump A Torus Suction Vlv	OPEN		
E11-F003A	HX 2A Outlet Vlv	OPEN		
E11-F007A	Min Flow Bypass Vlv	CLOSED		
E11-F020A	Pump A&C Torus Suction Vlv	OPEN		
E11-F047A	HX 2A Inlet Vlv	OPEN		
E11-F060A	Manual Injection Vlv	OPEN		
E11-PDV-F068A	HX 2A SW Disch Vlv	CLOSED		
CS-S17A	Containment Spray Valve Control Think Switch	OFF		

Categories

K/A:	S600000G 2.02.37	Tier / Group:	T1G1
RO Rating:	3.6	SRO Rating:	4.6
LP Obj:		Source:	NEW
Cog Level:	HIGH	Category 8:	

94. What action is required to be taken if Alternate Safe Shutdown (ASSD) Staffing drops below minimum complement due to an emergent on-shift AO illness and what procedure provides the guidance for this action?

The guidance for establishing an __(1)__ if ASSD staffing composition is less than the minimum required is provided by __(2)__.

A. (1) ASSD Impairment
   (2) 0ASSD-00, User Guide

B. (1) Active LCO for T.S. 5.2.2, Facility Staff Organization,
   (2) 0ASSD-00, User Guide

C. (1) ASSD Impairment
   (2) 0OI-01.01, BNP Conduct of Operations Supplement

D. (1) Active LCO for T.S. 5.2.2, Facility Staff Organization,
   (2) 0OI-01.01, BNP Conduct of Operations Supplement

Feedback

K/A: SG2.01.05
Conduct of Operations
Ability to use procedures related to shift staffing, such as minimum crew complement, overtime limitations, etc.
(CFR: 41.10 / 43.5 / 45.12)

RO/SRO Rating: 2.9/3.9

Objective: CLS-LP-304-M*13m
13. Given ASSD procedures and plant conditions that require use of ASSD procedures, determine the following:
    m. The manpower required to support the ASSD actions.

Reference:
0ASSD-00, Revision 37, Page 30, Section 5.3.3

Cog Level: High

Explanation:
The ASSD staffing composition may be less than the minimum requirements for a period of time not to exceed two hours in order to accommodate unexpected absence of on-duty shift crew members provided immediate action is taken to restore requirements to within the minimum requirements of the shift ASSD staffing. If the ASSD staffing composition is less than the minimum required, establish an Alternative Safe Shutdown Impairment in accordance with 0PLP-1.5, Alternative Shutdown Capability Controls, and 0FPP-020, Impairment Notification.

Distractor Analysis:
Choice A: Correct Answer

Choice B: Plausible because an impairment is the same as LCO (0OI-01.01) but impairments are not established against TS 5.2.2 and ASSD User Guide is correct.

Choice C: Plausible because ASSD impairment is correct and 0OI-01.01 provides staffing requirements for TS 5.2.2 but directs use of 0ASSD-00 procedure use for required staffing.

Choice D: Plausible because Plausible because an impairment is the same as LCO (0OI-01.01) but impairments are not established against TS 5.2.2 and 0OI-01.01 provides staffing requirements for TS 5.2.2 but directs use of 0ASSD-00 procedure use for required staffing.

SRO Only Basis: Requires knowledge of TS 5.2.2 Facility Staff Organization - and prescribes the procedure required for guidance during periods of ASSD minimum complement not maintained.

Notes

5.0 INSTRUCTIONS

5.3 General Guidelines for ASSD Staff

5.3.1 All ASSD Staffing Roster members must be capable of prompt response when events are in progress that may require entry into ASSD procedures.

5.3.2 All ASSD members shall obtain a designated radio at the beginning of shift and ensure that it is charged.

NOTE:	Planned reduction of ASSD personnel below the minimum number required is **NOT** permitted.

5.3.3 The ASSD staffing composition may be less than the minimum requirements for a period of time not to exceed two hours in order to accommodate unexpected absence of on-duty shift crew members provided immediate action is taken to restore requirements to within the minimum requirements of the shift ASSD staffing.

5.3.4 If the ASSD staffing composition is less than the minimum required, establish an Alternative Safe Shutdown Impairment in accordance with 0PLP-1.5, Alternative Shutdown Capability Controls, and 0FPP-020, Impairment Notification.

5.3.5 If an impairment exceeds two hours, initiate a Condition Report.

5.3.6 With both units in Mode 4 or 5, ASSD staffing is not required.

5.0 INSTRUCTIONS

5.4 Minimum ASSD Nuclear Shift Staffing/Assignments

5.4.1 Senior Reactor Operators:

1 Unit 1 SCO: Unit 1 Remote Shutdown Panel

1 Unit 2 SCO: Unit 2 Remote Shutdown Panel

5.4.2 Auxiliary Operators:

1 Unit 1 Reactor Building/MCC Operator or as directed by the Unit SCO

1 Unit 2 Reactor Building/MCC Operator or as directed by the Unit SCO

1 Diesel Generator Operator or as directed by the Unit SCO

1 Emergency Switchgear Operator or as directed by the Unit SCO

1 Service Water Building Operator or as directed by the Unit SCO

9.4 Operations Leadership Role in Station Activities (continued)

5. Operators work closely with station support personnel to establish appropriate priorities for resolving plant equipment and station program deficiencies. Being aware of the integrated effect of equipment out of service and establishing priorities for equipment return-to-service consistent with plant impact are key components of this philosophy.

6. Operations pursues the root cause(s) of problems; provides direction to implement corrective actions and hold department and station personnel accountable for achieving expected levels of performance.

9.5. Operations Shift Staffing

Standards

Operations ensures that the Control Room is adequately staffed for plant operations with appropriately qualified individuals. Additionally, Operations ensures staffing is adequate to meet regulatory and programmatic requirements.

Expectations

1. General

   a. The CRS and Shift Manager are responsible for ensuring that only qualified watchstanders hold required positions. Personnel should verify they are qualified for the position to be held prior to assuming the watch.

   b. Individual qualifications for specific positions can be found in REG-NGGC-0012, Confirmation of Personnel Qualifications Associated with Commitments to Regulatory Guide 1.8.

   c. The shift complement may be one less than the minimum requirement for a period of time not to exceed 2 hours in order to accommodate unexpected absence of on-duty shift members provided immediate action is taken to restore the shift complement to within the minimum requirements. This provision does not permit any shift member position to be unmanned upon shift change due to an oncoming shift member being late or absent.

   d. Shift staffing shall meet the requirements of the individual plant license/Tech Specs and other regulatory and programmatic required positions at all times. Required staff numbers and positions can be found in Attachment 1 "Shift Staffing".

Attachment 1 - Shift Staffing

Sheet 1 of 2

Shift Manning BNP

Position	Minimum staffing	Note
SM	1	
CRS	2	
SRO/STA	1	
RO	3	
AO	9	

9.5 Operations Shift Staffing

In addition to the requirements of OPS-NGGC-1000, the following requirements apply:

9.5.1 General

The following table outlines the administrative guideline for the normal Operations shift complement. Any deviation from the normal shift complement must remain in accordance with Section 5.2.2 of Technical Specifications, and applicable sections of 0ASSD-00, 0FPP-031, and Attachment 13. (Attachment 13 contains a listing of required ERO Watch Stations and qualifications for each and ASSD positions. This attachment may be used as a tool to support determining shift staffing requirements.)

BNP Watchstations	**BNP Shift Complement**	**License**
Shift Manager (SM)	1 Shift Manager	SRO
Control Room Supervisor (CRS)	2 CRSs (1 for each unit)	SRO
Reactor Operator (RO)	4 Reactor Operators (typically, 2 for each unit)	RO/SRO
Auxiliary Operator (AO)	9 (includes 2 in Radwaste)	N/A
Operations Center/Field SRO	1 Operations Center/Field SRO	SRO
STA*	1 STA	STA Qualified

*The STA may stand watch as a CRS or Reactor Operator provided the following requirements are met:

- At least 4 SROs are available on shift (this includes the STA but does **NOT** include the Fire Brigade Advisor which may be filled by an RO licensed individual).
- Another Licensed Operator is designated to relieve the STA as Unit CRS or RO. (Relief as Reactor Operator is required if only one operator is assigned to a unit. Relief as CRS shall be filled from the CRS position on the shift staffing roster.)
- The designated relief must NOT be assigned as the Fire Brigade Advisor.
- The designated relief has taken turnover on the affected unit.
- The designated relief must be able to relieve the STA within 10 minutes.

ATTACHMENT 13
Page 1 of 2
Operations Staffing Roster

Date:_____ Shift:_____

ERO Position / PQD	Name	ASSD Position
Operations		
CR-SEC PB59		SEC
STA PB13		STA
SRO PB11		Unit 1 CRS/U-1 RSD Panel
SRO PB11		Unit 2 CRS/U-2 RSD Panel
*RO PB12		Unit 1 RB MCC Operator
*RO PB12		Unit 2 RB MCC Operator
*RO PB12		*FB Advisor
CREC PB17		CREC
AO PB14		SW Operator
AO PB14		DG Operator
AO PB14		Emergency Switchgear Operator
FB (SIC) FB02/FB03		FB (SIC)
FB FB02		FB
FB FB02		FB
FB FB02		FB
FB FB02		FB
		Security Contact
		E&RC Contact
		Maintenance Contact

* May hold an RO OR SRO license.

Security Key Accountability

Position	Name	Key #
Unit 1 RB AO		
Unit 2 RB AO		
Outside AO		
Unit 1 CRS		
Unit 2 CRS		
Shift Manager		

5.2.2 Facility Staff

The facility staff organization shall include the following:

a. A total of three non-licensed operators shall be assigned for Brunswick Units 1 and 2 at all times.

(continued)

5.2.2 Facility Staff (continued)

b. At least one licensed Reactor Operator (RO) shall be present in the control room when fuel is in the reactor. In addition, when either unit is in MODE 1, 2, or 3, at least one licensed Senior Reactor Operator (SRO) shall be present in the control room. With one unit in MODE 1, 2, or 3 and the other unit defueled, the minimum shift crew shall include a total of two SROs and two ROs.

c. Shift crew composition may be less than the minimum requirement of 10 CFR 50.54(m)(2)(i) and Specifications 5.2.2.a and 5.2.2.g for a period of time not to exceed 2 hours in order to accommodate unexpected absence of on-duty shift crew members provided immediate action is taken to restore the shift crew composition to within the minimum requirements.

d. An individual qualified in radiation protection procedures shall be on site when fuel is in the reactor. The position may be vacant for not more than 2 hours, in order to provide for unexpected absence, provided immediate action is taken to fill the required position.

e. Deleted.

f. The operations manager or assistant operations manager shall hold an SRO license.

g. The shift technical advisor shall serve in an advisory capacity to the shift superintendent on matters pertaining to the engineering aspects assuring safe operation of the unit when either unit is in MODE 1, 2, or 3.

Categories

K/A:	SG2.01.05	Tier / Group:	T3
RO Rating:	2.9	SRO Rating:	3.9
LP Obj:	CLS-LP-304-M*13M	Source:	NEW
Cog Level:	HIGH	Category 8:	Y

95. 0FH-11, Refueling, prohibits control rod withdrawal during the core load sequence until a neutronic bridge is established.

Which one of the following core loading sequences establishes a neutronic bridge as described in 0FH-11?

Four fuel bundles are loaded around __(1)__, then fuel is loaded in all fuel cells in a line between SRMs __(2)__.

A. (1) SRMs A and D only
   (2) A and D

B. (1) SRMs B and D only
   (2) B and D

C. (1) each of the four SRMs
   (2) A and D

D. (1) each of the four SRMs
   (2) B and D

Feedback

K/A: SG2.01.42
Conduct of Operations
Knowledge of new and spent fuel movement procedures.
(CFR: 41.10 / 43.7 / 45.13)

RO/SRO Rating: 2.5/3.4

Objective: CLS-LP-305-C*

Reference:
0FH-1, Revision 93, Page 9, Section 4.37

Cog Level: High

Explanation:
Provide ENP-24-12, Figure 1 as a reference

From FH-11, 4.37

To help ensure that an unmonitored criticality will not occur, control rod withdrawal is not allowed during the core reload sequence until a neutronic bridge is established. The neutronic bridge ensures that two SRMs are neutronically coupled, thus monitoring the loaded area of the core. The reload sequence has three basic steps. Four fuel bundles are loaded around each of the four SRMs, the neutronic bridge is established and a spiral reload of the other fuel bundles completes the sequence. The neutronic bridge is established by loading fuel in all fuel cells in a line between two SRMs. These SRMs must be on opposite sides of the core and the line of loaded fuel cells must intersect the center of the core (A to D would not intersect the center, B to D would).

Distractor Analysis:
Choice A: Plausible because loading fuel around 2 SRMs and a line between them would establish a neutron bridge (between those 2 SRMs) but not IAW 0FH-11 and A&D are adjacent.

Choice B: Plausible because loading fuel around 2 SRMs and a line between them would establish a neutron bridge (between those 2 SRMs) but not IAW 0FH-11 and A&D are adjacent.

Choice C: Plausible because loading fuel around all SRMs is correct but A&D are adjacent.

Choice D: Correct Answer

SRO Only Basis: 10CFR55.43.6 Procedures and limitations involved in initial core loading, alterations in core configuration, control rod programming, and determination of various internal and external effects on core reactivity.
10CFR55.43.7 Fuel handling facilities and procedures.

Notes

4.0 PRECAUTIONS AND LIMITATIONS

4.34 RPS shorting links **SHALL** be removed for control rod withdrawal (except for control rods removed in accordance with Technical Specifications) in the refuel mode when core verification **AND** subsequent strongest rod out verification have **NOT** been performed. Control rods may be withdrawn with the shorting links installed, provided core verification (0ENP-24.13), subsequent strongest rod out verification (single control rod subcriticality test in accordance with 0FH-11) have been performed, and the one-rod-out refuel interlocks have been demonstrated to be operable.

4.35 An SRO with no other concurrent duties shall directly supervise all core alterations.

4.36 Members of fuel handling crew, scheduled for consecutive daily duty, should **NOT** normally work more than 12 hours out of each 24 hours.

4.37 To help ensure that an unmonitored criticality will **NOT** occur, control rod withdrawal is **NOT** allowed during the core reload sequence until a neutronic bridge is established. The neutronic bridge ensures that two SRMs are neutronically coupled, thus monitoring the loaded area of the core. The reload sequence has three basic steps. Four fuel bundles are loaded around each of the four SRMs, the neutronic bridge is established and a spiral reload of the other fuel bundles completes the sequence. The neutronic bridge is established by loading fuel in all fuel cells in a line between two SRMs. These SRMs must be on opposite sides of the core and the line of loaded fuel cells must intersect the center of the core.

4.38 With fuel removed, if a control rod is withdrawn without blade guides installed, the insertion capability shall be removed for the control rod.

R6 4.39 The Bridge Operator should immediately push the *STOP* button if the bridge fails to respond to Operator commands, such as speed changes or jogs. The *STOP* button will prevent all bridge movement.

R7 4.40 If attaching tools, such as a jet pump grapple or control blade latching tool, to either the monorail or frame mounted hoist, verify proper thread engagement/size by ensuring there is no play in the connection prior to thread engagement of three (3) full turns. The correct tool and coupling thread size is 7/16-14 UNC. Additionally, a 1/2-13 UNC bolt will not fit into a proper size tool (7/16-14 UNC); thus, this check may be performed if practical. Failure to detect mis-matched thread sizes will significantly reduce the load capacity of the tool/hoist.

4.41 Indication of criticality observed on the SRM indicators during functional, subcritical, or shutdown margin rod checks shall be reason to terminate fuel loading until a complete evaluation of the cause of the criticality indication is determined.

FIGURE 09.1- 2
IN-Core Instrumentation Location Diagram

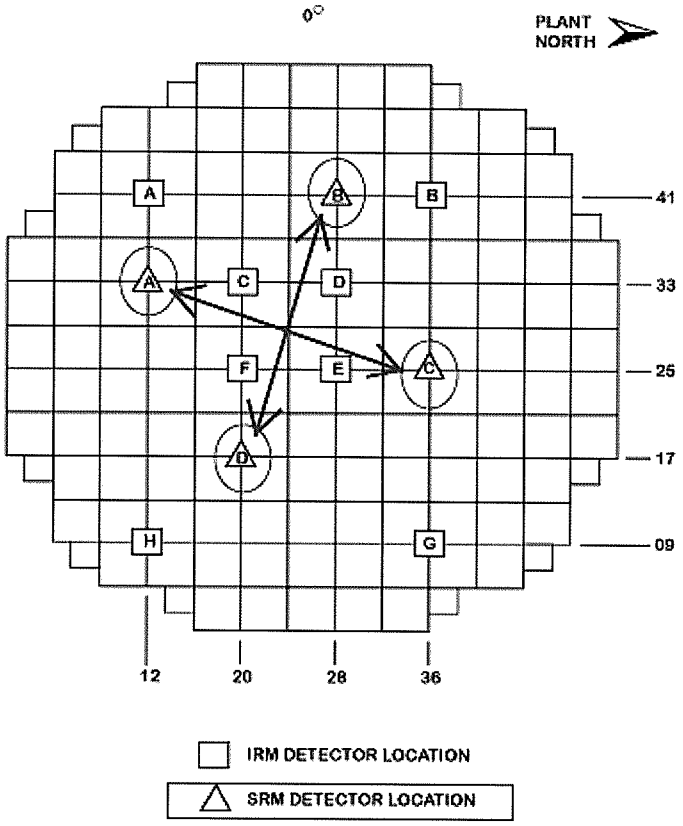

SRM	CORE LOCATION
A	12-33
B	28-41
C	36-25
D	20-17

IRM	CORE LOCATION
A	12-41
B	36-41
C	20-33
D	28-33

IRM	CORE LOCATION
E	28-25
F	20-25
G	36-09
H	12-09

Categories

K/A:	SG2.01.42	Tier / Group:	T3
RO Rating:	2.5	SRO Rating:	3.4
LP Obj:		Source:	BANK
Cog Level:	HIGH	Category 8:	Y

96. With Unit Two operating at power, Annunciator *RCIC TURBINE STM LINE DRN POT LEVEL HI* alarms and the RO observes the E51-F054, F025, & F026 indicate closed on Panel P601.

Which one of the following identifies the cause of the above indications and the operability status of RCIC?

(Reference provided)

These valves are closed due to loss of __(1)__ and after taking the appropriate actions in the annunciator procedure the system would be declared Inoperable and(but) __(2)__.

A. (1) pneumatics
   (2) Unavailable

B.✓ (1) pneumatics
   (2) Available

C. (1) DC Power
   (2) Unavailable

D. (1) DC Power
   (2) Available

Feedback

K/A: SG2.02.15
EQUIPMENT CONTROL
Ability to determine the expected plant configuration using design and configuration control documentation, such as drawings, line-ups, tag-outs, etc.
(CFR: 41.10 / 43.3 / 45.13)

RO/SRO Rating: 3.9/4.3

Objective: CLS-LP-016*15e
15. Given plant conditions, predict the RCIC System response to the following conditions:
    s. Loss of instrument air.
    e. DC power failure.

Reference:
2APP A-03 3-5, Revision 49, Page 44

Cog Level: High

Explanation:
Valves fail closed on loss of DC power or Pneumatics, however with a loss of power, position indication on P601 will also be lost. Per APP A-03, 3-5 - If either E51-F025 or E51-F026 has been failed closed for more than 5 minutes, perform the following:
a. Close Turbine Trip and Throttle Valve, E51-V8, to prevent water hammer damage from a RCIC auto start.
b. If RCIC **must** be started, proceed to OP-16.
this would still make RCIC available for use per the procedure but it is inoperable because it will not auto start as required.

This will make the RCIC system inoperable but available to be restarted per the procedure.

Distractor Analysis:
Choice A: Plausible because loss of pneumatics only is correct and the system will not start in auto when required, but could be manually started.

Choice B: Correct Answer

Choice C: Plausible because a loss of power will cause valves to fail closed, but with loss of power position indication will be lost and the system will not start in auto when required.

Choice D: Plausible because pneumatics and power will cause valves to fail closed, but with loss of power position indication will be lost and it is available to start per the procedure which makes it available.

SRO Only Basis: Assessment of facility conditions and selection of appropriate procedures during normal, abnormal, emergency conditions.

Notes

RCIC STEAM POT
Partial P&ID

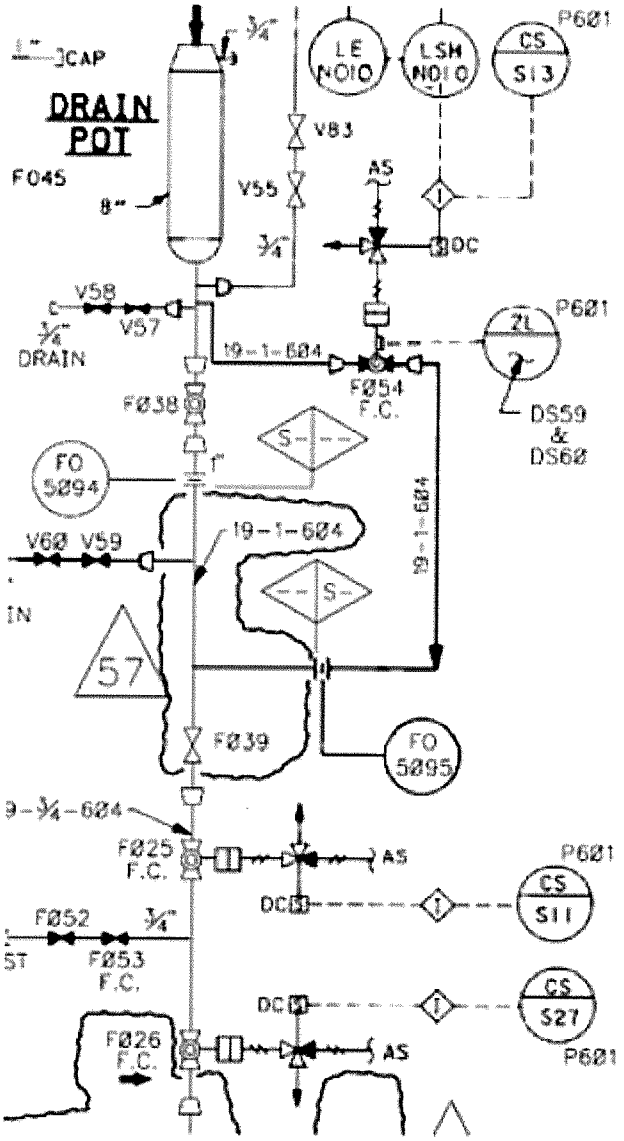

ACTIONS (Cont'd)

CAUTION

If Main Steam Line Drain Vlv, MVD-F021, fails to close, then the Main Steam Line Drain Inboard and Outboard Isolation valves must be closed.

6. If required, then close Main Steam Line Drain Inbd Isol Vlv, B21-F016, and Main Steam Line Drain Otbd Isol Vlv, B21-F019.

7. If alarm fails to clear within five minutes after completion of actions 1 2,3, 5, or 6, then dispatch an Auxiliary Operator to the Drywell access roof to determine if the HPCI/RCIC Condensate Drain Line Back Pressure Orifice is plugged or the drain line isolated.

NOTE: Greater than 500 psig on HPCI/RCIC Back Pressure Orifice Inlet Pressure Gauge, 2-MVD-PI-7146 would be an indication of a plugged orifice.

8. IF back pressure orifice is plugged,
   a. Open HPCI/RCIC Cond Drn Line Back Press Orifice Bypass Valve, 2-MVD-V5002.
   b. Close HPCI/RCIC Cond Drn Line Back Press Orifice Inlet Isol Valve, 2-MVD-V5000.
   c. Close HPCI/RCIC Cond Drn Line Back Press Orifice Outlet Isol Valve, 2-MVD-V5001.
   d. Place valves under proper administrative control.
9. If HPCI/RCIC Cond Drain Line is isolated:
   a. Open HPCI/RCIC Cond Drn Line Back Press Orifice Inlet Isol Valve, 2-MVD-V5000.
   b. Open HPCI/RCIC Cond Drn Line Back Press Orifice Outlet Isol Valve, 2-MVD-V5001.
10. IF a circuit malfunction is suspected, ensure that a WR/JO is prepared.

DEVICE/SETPOINTS

Level Switch E51-LSH-N010-1 Switch Point #1	Instrument failure in the dry condition/1980 mV.
Level Switch E51-LSH-N010-1 the Switch Point #2/0" ± 2" water.	Also detects instrument failure in wet condition. Incorporates 100 sec time delay in annunciator circuitry.

POSSIBLE PLANT EFFECTS

Damage to the RCIC turbine due to high moisture carryover on the steam.

REFERENCES

1. LL-9364 - 50
2. OP-16, RCIC System Operating Procedure

RCIC TURBINE STM LINE DRN POT LEVEL HI

(RCIC Turbine Steam Line Water Drain Pot High Level)

AUTO ACTIONS

1. Supply Drain Pot Drain Bypass Valve, E51-F054, opens.

CAUSE

1. Heavy condensate load during steam line warmup.
2. Normal orifice clogged.
3. HPCI/RCIC Cond. Drain Line Back Pressure Orifice is plugged.
4. Drain line isolation valves to main condenser closed.
5. Drain pot level instrument failure or loss of instrument power.
6. Circuit malfunction.

OBSERVATIONS

1. RCIC Supply Drain Pot Drain Byp Valve, E51-F054, opened.

> NOTE: If alarm occurs and the E51-F054 valve does not automatically open, the most probable cause is instrument failure or loss of instrument power (Panel 2B-Rx "H10" CKT 14).
>
> NOTE: Additional LED indications are available inside the level element control box device H5E (RB 20' elevation) as follows:

Normal status	No annunciator	No LEDs illuminated
	High Water level	Green LED on
	Instrument failure	Red LED on

ACTIONS

1. Ensure Supply Drain Pot Drain Byp Vlv, E51-F054, is open.
2. Ensure RCIC Supp Pot Inbd Isolation Valve, E51-F025, is open.
3. Ensure RCIC Supp Pot Outbd Isolation Valve, E51-F026, is open.

> NOTE: Valves E51-F025 and E51-F026 will close on loss of instrument air and will also close if E51-F045 is not fully closed. Valves E51-F025 and E51-F026 cannot be opened in either of these conditions.

4. If either E51-F025 or E51-F026 has been failed closed for more than 5 minutes, perform the following:
   a. Close Turbine Trip and Throttle Valve, E51-V8, to prevent water hammer damage from a RCIC auto start.
   b. If RCIC must be started, proceed to OP-16.
5. Ensure Main Steam Drain Line Vlv, MVD-F021, is closed.

8.4 Isolating the RCIC System Steam Supply

R
Referen
Use

8.4.1 Initial Conditions

1. All applicable prerequisites listed in Section 4.0 are met. ☐

8.4.2 Procedural Steps

1. IF rapid isolation of RCIC steam line is desired, **THEN PERFORM** the following:

   a. **CLOSE** *STEAM SUPPLY INBOARD ISOL VLV, E51-F007.* ☐

   b. **CLOSE** *STEAM SUPPLY OUTBOARD ISOL VLV, E51-F008.* ☐

CAUTION

Opening the *TURBINE STEAM SUPPLY VLV, E51-F045,* to de-pressurize the RCIC steam line will roll the RCIC turbine.

2. IF rapid isolation is **NOT** desired, **THEN PERFORM** the following to isolate and de-pressurize the RCIC steam supply line:

   a. **CLOSE** *STEAM SUPPLY INBOARD ISOL VLV, E51-F007.* ☐

   b. **OPEN** *HPCI/RCIC COND DRN LINE BACK PRESS ORIFICE BYPASS VALVE, MVD-V5002.* ☐

   c. **OPEN** *TURBINE STEAM SUPPLY VLV, E51-F045,* **AND MONITOR** turbine response. ☐

   d. **CLOSE** *SUPPLY DRAIN POT INBD DRAIN VLV, E51-F025.* ☐

   e. **CLOSE** *SUPPLY DRAIN POT OTBD DRAIN VLV, E51-F026.* ☐

8.12 Controlled Manual Start of the RCIC System With Turbine Steam Line Drain Pot High Level or RCIC Pump Low Discharge Pressure Indicated

R Reference Use

8.12.1 Initial Conditions

1. **IF** RCIC is being operated for a planned evolution (non-emergency operation), **THEN** Health Physics (HPs) **shall** be notified to attend the pre-job briefing **AND** a log entry made to identify the individual contacted. ☐

2. One of the following conditions exist:

   a. The RCIC turbine has been shutdown or tripped and annunciator *RCIC TURBINE STM LINE DRN POT LEVEL HI* (A-03 3-5) sealed in. ☐

   b. The RCIC turbine has been shutdown or tripped and the RCIC *PUMP DISCH PRESS LOW* annunciator (A-02, 1-6) is sealed in. ☐

3. A controlled manual start of RCIC is desired. ☐

8.12.2 Procedural Steps

CAUTION

The RCIC turbine has the potential for failures that could cause personnel injuries. The potential is most significant when the system is initially started after control system maintenance, or after an extended period of being idle. Announcing turbine starts and clearing of all personnel from the RCIC area are required during this period of risk. Permission to access this area during initial RCIC roll requires the approval of the Unit SCO.

1. **EVACUATE** all personnel from the RCIC turbine area. ☐

PANEL 4A Reference Drawing LL-3024-6	LOCATION Control Building 49 ft East	NORMAL SUPPLY Switchboard 2A

CIRCUIT	LOAD	EFFECT
1	Rx. Annunciator Logic, 2-H12-P630 Panels 601/603	1. Auto transfers to alternate source, Panel 4B circuit 1. 2. Receive annunciator A6-5-8.
2	HPCI Flow controller E41-FIC-K600 (24 VDC)	1. Controller fails downscale. 2. Loss of flow indication. 3. Receive annunciator A1-2-5. 4. Loss of HPCI 5. Loss of ASSD function.
	HPCI Supervisory Lights	1. Loss of E41-V8 and E41-V9 indication 2. Loss HPCI oil tank level Hi/LO alarm.
	HPCI Vertical Board meters (52.5 VDC)	1. Loss of pressure transmitters/meters R601, R602, R603, R60
	HPCI Turbine Speed Control	1. Loss of speed control, EGM and speed sensor. 2. Loss of speed indication on vertical board.
	E41-F053, E41-F054, E41-F028	1. Fail closed. 2. E41-F054 and E41-F028 loss of indication.
	E51-F005, E51-F025	1. Fail closed. 2. Loss of indication.

PANEL: 4B Reference Drawing: LL-3024-7	LOCATION: Control Building 49 ft South	NORMAL SUPPLY: Switchboard 2B

Ckt #	LOAD	EFFECT
5	Recirc Pump B Auxiliary Equipment Alternate Control Power	1. Loss of alternate control power to: • Recirc B Gen. Field Breaker, control, trip and indication. • Recirc B Scoop Tube Power Failure Lock & Reset • Recirc Lube Oil Pumps B-1 and B-2, control and indication. • Recirc B Lock out /Trip Logic • ATWS Trip Logic B 2. Normal power is from Panel 10A, ckt. 3.
6	Backup Scram valve, 2-C12-F110B	1. Backup Scram valve fails closed; Div I Backup Scram valve can still fun
	Div II Backup Scram Logic	1. Scram Discharge Volume Vent and Drain Valves will not receive a close valves will still function with Div I. 2. DFWLCS will not receive auto set down from Div II. Digital Feedwater w 3. Ten-second time delay prior to scram reset, will not function for B RPS s
7	Spare	Spare
8	RCIC Flow controller E51-FIC-K600 (24 VDC)	1. Controller fails downscale. 2. Loss of flow indication. 3. Receive annunciator A3-6-5.
	RCIC Supervisory Lights	1. Loss of E51-V8 and E51-V9 indication.
	RCIC Vertical Board meters (52.5 VDC)	1. Loss of pressure transmitters/meters R601, R602, R603, R604 on the R
	E51-F026, E51-F004, E51-F054	1. Fail closed. 2. Loss of indication.
	HPCI E41-F025	1. Fail closed. 2. Loss of indication.
9	RCIC EGM	1. Loss of speed control. 2. Loss of speed indication on RTGB
	RCIC Initiation and Control Logic	1. RCIC will not auto initiate. Cannot be manually operated. 2. Receive annunciator A3-1-4. 3. Min flow valve will not auto open. 4. Barometric condenser vacuum tank auto level control inop.

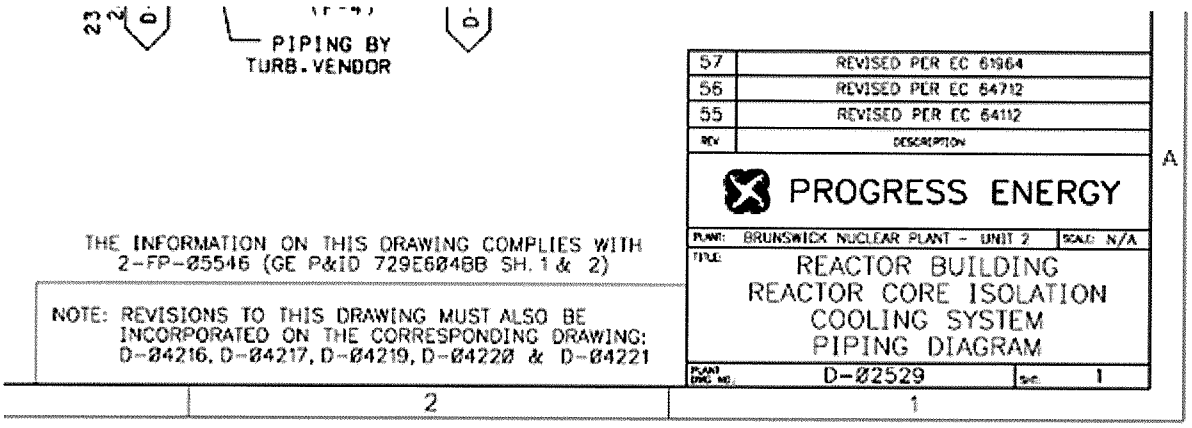

GENERAL NOTES:

1. EQUIPMENT, INSTRUMENTS & PIPING ARE PREFIXED BY UNIT & SYSTEM NUMBERS "2-E51" UNLESS OTHERWISE NOTED.
2. FOR REFERENCE DRAWINGS SEE D-Ø2519.
3. INSTRUMENTATION PENETRATIONS ARE MULTI-LINES THROUGH ONE SLEEVE.
4. ALL INSTRUMENT RACKS ARE PREFIXED "2-H21".
5. ◇1 REFER TO LOGIC INTERLOCK.
6. ALL ANNUNCIATOR ALARMS ARE PREFIXED "2-H12-P6Ø1-XX".
7. L.K. DENOTES VALVE LEAKOFF WHICH WILL BE NORMALLY OPEN & WILL BE PIPED TO C.R.W. UNDER CLASS 16Ø.
8. VENDOR FURNISHED.
9. ⬡ DENOTES MASTER EQUIPMENT LIST NUMBER.
10. SWITCH CS-3324 IS USED TO SELECT EITHER FIC-R6ØØ OR FIC-3325 AND TO TRANSFER POWER SUPPLY SOURCE TO FT-NØØ3.
11. ◁XY|XY▷ X=ISI CLASS
    Y=QUALITY CLASS (1,2,3,M,-)
    SEE D-Ø2519 FOR ADDITIONAL NOTES.
12. HIGH POINT VENT CAP IS NORMALLY REMOVED AND DRAIN HOSE INSTALLED FOR SYSTEM VENTING.
13. SEE TECHNICAL REPORT #ØBNP-TR-ØØ2 FOR APPLICABLE ASME SECTION XI REQUIREMENTS.

F

E

Categories

K/A:	SG2.02.15	Tier / Group:	T3
RO Rating:	3.9	SRO Rating:	4.3
LP Obj:	CLS-LP-016*15E	Source:	NEW
Cog Level:	HIGH	Category 8:	YF

97. The following conditions exist on Unit One after a transient:

Jet Pump Flow Loop A	22 Mlbs/hr
Jet Pump Flow Loop B	33 Mlbs/hr
Recirc Pump A Percent Speed	47%
Recirc Pump B Percent Speed	66%
Total Core Flow (U1CPWTCF)	55 Mlbs/hr

Which one of the following identifies the Required Action IAW T.S. 3.4.1, Recirculation Loops Operating, and the bases for this action?

Recirculation __(1)__ mismatch is exceeded requiring Recirculation Loop A to be considered out of service __(2)__.

A.✓ (1) Loop Flow
(2) to ensure that assumptions of the LOCA analysis are satisfied

B. (1) Loop Flow
(2) due to the inability to detect significant degradation in jet pump performance

C. (1) Pump Speed
(2) to ensure that assumptions of the LOCA analysis are satisfied

D. (1) Pump Speed
(2) due to the inability to detect significant degradation in jet pump performance

Feedback

K/A: SG2.02.22
Equipment Control
Knowledge of limiting conditions for operations and safety limits.
(CFR: 41.5 / 43.2 / 45.2)

RO/SRO Rating: 4.0/4.7

Objective: CLS-LP-002*34
27. Explain why there is a limit for mismatch between total Jet Pump Loop flows
34. Given plant conditions and Technical Specifications, including the Bases, TRM, ODCM, and COLR determine the required action(s) to be taken in accordance with Technical Specifications associated with the Reactor Recirculation System. (SRO/STA only)

Reference:
Unit 1 Technical Specification 3.4.1 and BASES

Cog Level: High

Explanation:
Two recirculation loops are normally required to be in operation with their flows matched within the limits specified in SR 3.4.1.1 to ensure that that during a LOCA caused by a break of the piping of one recirculation loop the assumptions of the LOCA analysis are satisfied.
Jet pump loop flow mismatch should be maintained within the following limits:
- jet pump loop flows within 10% (maximum indicated difference 7.5 x10^6 lbs/hr) with total core flow less than 58 x10^6 lbs/hr
- jet pump loop flows within 5% (maximum indicated difference 3.5 x10^6 lbs/hr) with total core flow greater than or equal to 58 x10^6 lbs/hr

Distractor Analysis:
Choice A: Correct Answer

Choice B: Plausible because Loop flow mismatch is correct and vibrations would be a result of low or reverse flow.

Choice C: Plausible because Pump Speed used to be the indication utilized and LOCA analysis is correct.

Choice D: Plausible because Pump Speed used to be the indication utilized and vibrations would be a result of low or reverse flow.

SRO Only Basis: Application of Required Actions and Knowledge of TS Bases.

Notes

3.4 REACTOR COOLANT SYSTEM (RCS)

3.4.1 Recirculation Loops Operating

LCO 3.4.1 Two recirculation loops with matched flows shall be in operation,

OR

One recirculation loop may be in operation provided the following limits are applied when the associated LCO is applicable:

a. LCO 3.2.1, "AVERAGE PLANAR LINEAR HEAT GENERATION RATE (APLHGR)," single loop operation limits specified in the COLR;

b. LCO 3.2.2, "MINIMUM CRITICAL POWER RATIO (MCPR)," single loop operation limits specified in the COLR;

c. LCO 3.2.3, "LINEAR HEAT GENERATION RATE (LHGR)," single loop operation limits specified in the COLR; and

d. LCO 3.3.1.1, "Reactor Protection System (RPS) Instrumentation," Function 2.b (Average Power Range Monitors Simulated Thermal Power—High), Allowable Value of Table 3.3.1.1-1 is reset for single loop operation.

APPLICABILITY: MODES 1 and 2.

ACTIONS

CONDITION	REQUIRED ACTION	COMPLETION TIME
A. Requirements of the LCO not met.	A.1 Satisfy the requirements of the LCO.	6 hours

(continued)

ACTIONS (continued)

CONDITION	REQUIRED ACTION	COMPLETION TIME
B. Required Action and associated Completion Time of Condition A not met. OR No recirculation loops in operation.	B.1 Be in MODE 3.	12 hours

SURVEILLANCE REQUIREMENTS

SURVEILLANCE		FREQUENCY
SR 3.4.1.1	----------NOTE---------- Not required to be performed until 24 hours after both recirculation loops are in operation. ---------- Verify recirculation loop jet pump flow mismatch with both recirculation loops in operation: a. ≤ 10% of rated core flow when operating at < 75% of rated core flow; and b. ≤ 5% of rated core flow when operating at ≥ 75% of rated core flow.	24 hours

BASES

APPLICABLE SAFETY ANALYSES (continued)

For AREVA fuel, the COLR presents single loop operation APLHGR limits in the form of a multiplier that is applied to the two loop operation APLHGR limits.

The transient analyses of Chapter 15 of the UFSAR have also been evaluated for single recirculation loop operation. The evaluation concludes that results of the transient analyses are not significantly affected by the single recirculation loop operation. There is, however, an impact on the fuel cladding integrity SL since some of the uncertainties for the parameters used in the critical power determination are higher in single loop operation. The net result is an increase in the MCPR operating limit.

During single recirculation loop operation, modification to the Reactor Protection System (RPS) average power range monitor (APRM) Simulated Thermal Power—High Allowable Value is required to account for the different analyzed limits between two-recirculation drive flow loop operation and operation with only one loop. The APRM channel subtracts the ΔW value from the measured recirculation drive flow to effectively shift the limits and uses the adjusted recirculation drive flow value to determine the APRM Simulated Thermal Power—High Function trip setpoint.

Recirculation loops operating satisfies Criterion 2 of 10 CFR 50.36(c)(2)(ii) (Ref. 4).

LCO

Two recirculation loops are normally required to be in operation with their flows matched within the limits specified in SR 3.4.1.1 to ensure that during a LOCA caused by a break of the piping of one recirculation loop the assumptions of the LOCA analysis are satisfied. Alternately, with only one recirculation loop in operation, modifications to the required APLHGR limits (LCO 3.2.1, "AVERAGE PLANAR LINEAR HEAT GENERATION RATE (APLHGR)"), MCPR limits (LCO 3.2.2, "MINIMUM CRITICAL POWER RATIO (MCPR)"), LHGR limits (LCO 3.2.3, "LINEAR HEAT GENERATION RATE (LHGR)"), and APRM Simulated Thermal Power—High Allowable Value (LCO 3.3.1.1), as applicable, must be applied to allow continued operation. The COLR defines adjustments or modifications required for the APLHGR, MCPR, and LHGR limits for the current operating cycle.

(continued)

BASES

APPLICABILITY

In MODES 1 and 2, requirements for operation of the Reactor Coolant Recirculation System are necessary since there is considerable energy in the reactor core and the limiting design basis transients and accidents are assumed to occur.

In MODES 3, 4, and 5, the consequences of an accident are reduced and the coastdown characteristics of the recirculation loops are not important.

ACTIONS

A.1

With the requirements of the LCO not met, the recirculation loops must be restored to operation with matched flows within 6 hours. A recirculation loop is considered not in operation when the pump in that loop is idle or when the mismatch between total jet pump flows of the two loops is greater than the required limits. The loop with the lower flow must be considered not in operation. Should a LOCA occur with one recirculation loop not in operation, the core flow coastdown and resultant core response may not be bounded by the LOCA analyses. Therefore, only a limited time is allowed to restore the inoperable loop to operating status.

Alternatively, if the single loop requirements of the LCO are applied to operating limits and RPS setpoints, as applicable, operation with only one recirculation loop would satisfy the requirements of the LCO and the initial conditions of the accident sequence.

The 6 hour Completion Time is based on the low probability of an accident occurring during this time period, on a reasonable time to complete the Required Action (i.e., reset the applicable limits or setpoints for single recirculation loop operation), and on frequent core monitoring by operators allowing abrupt changes in core flow conditions to be quickly detected.

This Required Action does not require tripping the recirculation pump in the lowest flow loop when the mismatch between the total jet pump flows of the two loops is greater than the required limits. However, in cases where large flow mismatches occur, low flow or reverse flow can occur in the low flow loop jet pumps, causing vibration of the jet pumps. If zero or reverse flow is detected, the condition should be alleviated by changing pump speeds to re-establish forward flow.

(continued)

BASES

ACTIONS (continued)

B.1

With no recirculation loops in operation or the Required Action and associated Completion Time of Condition A not met, the plant must be brought to a MODE in which the LCO does not apply. To achieve this status, the plant must be brought to MODE 3 within 12 hours. In this condition, the recirculation loops are not required to be operating because of the reduced severity of DBAs and minimal dependence on the recirculation loop coastdown characteristics. The allowed Completion Time of 12 hours is reasonable, based on operating experience, to reach MODE 3 from full power conditions in an orderly manner and without challenging plant systems.

SURVEILLANCE REQUIREMENTS

SR 3.4.1.1

This SR ensures the recirculation loops are within the allowable limits for mismatch. At low core flow (i.e., < 75% of rated core flow), the MCPR requirements provide larger margins to the fuel cladding integrity Safety Limit such that the potential adverse effect of early boiling transition during a LOCA is reduced. A larger flow mismatch can, therefore, be allowed when core flow is < 75% of rated core flow. The recirculation loop jet pump flow, as used in this Surveillance, is the summation of the flows from all of the jet pumps associated with a single recirculation loop.

The mismatch is measured in terms of the percent of rated core flow. If the flow mismatch exceeds the specified limits, the loop with the lower flow is considered not in operation. The SR is not required when both loops are not in operation since the mismatch limits are meaningless during single loop or natural circulation operation. The Surveillance must be performed within 24 hours after both loops are in operation. The 24 hour Frequency is consistent with the Surveillance Frequency for jet pump OPERABILITY verification and has been shown by operating experience to be adequate to detect off normal jet pump loop flows in a timely manner.

REFERENCES

1. UFSAR, Section 5.4.1.3.
2. UFSAR, Chapter 15.
3. NEDC-31776P, Brunswick Steam Electric Plant Units 1 and 2 Single Loop Operation, February 1990.
4. 10 CFR 50.36(c)(2)(ii).

Categories

K/A:	SG2.02.22	Tier / Group:	T3
RO Rating:	4.0	SRO Rating:	4.7
LP Obj:	CLS-LP-002*34	Source:	NEW
Cog Level:	HIGH	Category 8:	Y

98. Which one of the following identifies the procedure required to control drywell pressure within PCPL-A IAW PCCP and the release rate restrictions, if any, in effect during the venting?

A. SEP-01 Section 1, Venting Primary Containment irrespective of Off Site Release rate

B. SEP-01, Section 2, Venting Primary Containment via the Suppression Chamber within Site Release Rate Limit

C. SEP-01, Section 3, Venting Primary Containment via the Drywell within Site Release Rate Limit

D. 0EDMG-003, Containment Venting Under Conditions of Extreme Damage irrespective of Off Site Release Rates

Feedback

K/A: SG2.03.11
Radiation Control
Ability to control radiation releases.
(CFR: 41.11 / 43.4 / 45.10)

RO/SRO Rating: 3.8/4.3

Objective: CLS-LP-300-L*08d
8. Given the Primary Containment Control Procedure and plant conditions, determine if the following actions are required:
   c. Venting the primary containment while staying within radioactivity release rate limits
   d. Venting the primary containment IRRESPECTIVE of radioactivity release rate limits

Reference:
0OI-37.8, Revision 4, Page 33, Step PC/P-18

Cog Level: High

Explanation:
Action to vent the primary containment is taken before drywell pressure rises to Primary Containment Pressure Limit A to assure that the integrity of the primary containment is maintained and to prevent core damage that might be caused by the inability to vent the reactor, as necessary, to permit injection of water to cool the core. Venting of the primary containment is performed irrespective of the off-site radioactivity release rate that will occur, and defeating isolation interlocks if necessary, because the consequences of not doing so may be either severe core damage or loss of primary containment integrity and uncontrolled radioactive release much greater than might otherwise occur. Note that primary containment venting is performed only, as necessary, to restore and then maintain pressure below the limit.

Distractor Analysis:
Choice A: Correct Answer.

Choice B: Plausible because within ODCM limits is utilized during SEP-01 section 1 when venting the torus due to containment Hydrogen/Oxygen concentration concerns and before exceeding PCPL-A

Choice C: Plausible because within ODCM limits is utilized during SEP-01 section 1 when venting the drywell due to containment Hydrogen/Oxygen concentration concerns and before exceeding PCPL-A.

Choice D: Plausible because irrespective is correct and after exceeding PCPL-A is wrong

SRO Only Basis: Detailed knowledge of diagnostic steps and decision points in the EOPs that involve transitions to emergency contingency procedures.

Notes

PRIMARY CONTAINMENT PRESSURE LIMIT-A

The lesser of the pressure capability of the primary containment, pressure at which containment vent valves sized to reject all decay heat from the containment can be opened and closed, or pressure at which SRVs can be opened and will remain open (Figure 2).

FIGURE 2
Primary Containment Pressure Limit-A

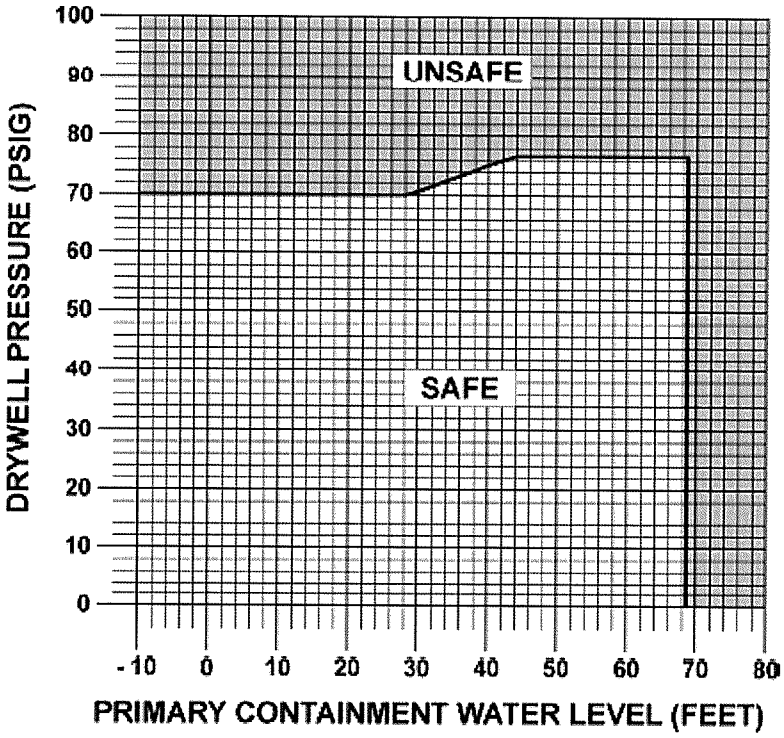

IF USING THE FOLLOWING INSTRUMENT:	PCPL-A IS:
CAC-PI-1230	70 PSIG
CAC-PI-4176	USE THE GRAPH
CAC-PR-1257-1	USE THE GRAPH

PCPL-A

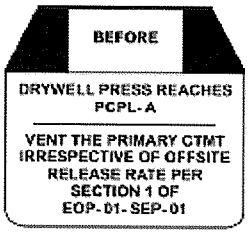

PC/P-18

STEP BASES:

Action to vent the primary containment is taken before drywell pressure rises to Primary Containment Pressure Limit A, defined to be the lesser of either:

a. The pressure capability of the containment, or

b. The maximum containment pressure at which vent valves sized to reject all decay heat from the containment can be opened and closed, or

c. The maximum containment pressure at which SRVs can be opened and will remain open, or

d. The maximum containment pressure at which reactor vent valves can be opened and closed.

This action is taken to assure that the integrity of the primary containment is maintained and to prevent core damage that might be caused by the inability to vent the reactor, as necessary, to permit injection of water to cool the core.

The directions to vent "before drywell pressure reaches PCPL-A" allows, but does not require, venting at significantly lower pressures. Early or extended venting can permit primary containment pressure reductions before significant fuel damage occurs, thereby increasing the capacity of the containment to retain fission products and reducing the radioactivity released to the environment. If the primary containment has failed, venting may also reduce the offsite dose by directing fission products through an elevated release point.

STEP PC/P-18 (continued)

Venting of the primary containment is performed irrespective of the off-site radioactivity release rate that will occur, and defeating isolation interlocks if necessary, because the consequences of not doing so may be either severe core damage or loss of primary containment integrity and uncontrolled radioactive release much greater than might otherwise occur. Note that primary containment venting is performed only, as necessary, to restore and then maintain pressure below the limit.

Primary containment venting is performed using Primary Containment Venting, EOP-01-SEP-01.

PRIMARY CONTAINMENT VENTING

1.0 ENTRY CONDITIONS

- As directed by the PC/P section of Primary Containment Control Procedure, EOP-02-PCCP

  OR

- As directed by the PC/H section of Primary Containment Control Procedure, EOP-02-PCCP

2.0 OPERATOR ACTIONS

CO:	2.1	**IF** while executing this procedure, it is recognized the actions can **NOT** be performed, **OR** will **NOT** be effective, **THEN GO TO** Containment Venting Under Conditions of Extreme Damage, 0EDMG-003, if directed by the Unit SCO.	☐
CO:	2.2	**IF** venting for pressure control, **THEN PERFORM** Section 1, on page 3.	☐
CO:	2.3	**IF** venting for H_2/O_2 control, **THEN PERFORM** section of procedure directed by SCO.	☐

Categories

K/A:	SG2.03.11	Tier / Group:	T3
RO Rating:	3.8	SRO Rating:	4.3
LP Obj:	CLS-LP-300-L*08D	Source:	NEW
Cog Level:	HIGH	Category 8:	

99. During non-ATWS emergency conditions on Unit Two, Emergency Depressurization is required with reactor pressure at 1100 psig.

Which one of the following identifies the bases for the Minimum Number of SRVs Required for Emergency Depressurization and the required procedure utilized if this number of SRVs open cannot be achieved?

The Minimum Number of SRVs Required for Emergency Depressurization is based on the low pressure ECCS system with the lowest head being capable of making up the SRV steam flow at the Minimum __(1)__.

__(2)__ Procedure is required if the minimum number of SRVs cannot be opened.

A. (1) Reactor Flooding Pressure
   (2) Primary Containment Flooding

B. (1) Reactor Flooding Pressure
   (2) Alternate Emergency Depressurization

C. (1) Alternate Reactor Flooding Pressure
   (2) Primary Containment Flooding

D. (1) Alternate Reactor Flooding Pressure
   (2) Alternate Emergency Depressurization

Feedback

K/A: SG2.04.17
Emergency Procedures / Plan
Knowledge of EOP terms and definitions.
(CFR: 41.10 / 45.13)

RO/SRO Rating: 3.9/4.3

Objective: CLS-LP-300-H*002
2. Given plant conditions and the Emergency Operating Procedures, determine if execution of the Alternate Emergency Depressurization Procedure is required.

Reference:
0EOP-01-UG, Revision 55, Page 70, Attachment 5 (Definitions)
RVCP

Cog Level: High

Explanation:
The Minimum Number of SRVs Required for Emergency Depressurization (5) is defined to be the least number of SRVs which correspond to a Minimum Alternate Reactor Flooding Pressure sufficiently low that the ECCS with the lowest head will be capable of making up the SRV steam flow at the corresponding Minimum Alternate Reactor Flooding Pressure. If the number of SRVs specified cannot be opened, the reactor must be depressurized by other means. A list of alternate systems that can be used for depressurizing the reactor is included in the Alternate Emergency Depressurization Procedure, EOP-01-AEDP.

Distractor Analysis:
Choice A: Plausible because Minimum Reactor Flooding Pressure is easily confused with Minimum Alternate Reactor Flooding Pressure and Primary Containment Flooding requires exiting all EOPs which is wrong for the given conditions.

Choice B: Plausible because Minimum Reactor Flooding Pressure is easily confused with Minimum Alternate Reactor Flooding Pressure and AEDP is correct.

Choice C: Plausible because Minimum Alternate Reactor Flooding Pressure is correct and Primary Containment Flooding requires exiting all EOPs which is wrong for the given conditions.

Choice D: Correct Answer

SRO Only Basis: Detailed knowledge of diagnostic steps and decision points in the EOPs that involve transitions to emergency contingency procedures.

Notes

MINIMUM ALTERNATE FLOODING PRESSURE

The lowest reactor pressure at which steam flow through open SRVs is sufficient to preclude any clad temperature from exceeding 1500°F even if the reactor core is not completely covered

Definitions

MINIMUM CORE FLOODING INTERVAL

The greatest amount of time required to flood the reactor to the top of the active fuel with reactor pressure at the minimum reactor flooding pressure and at least the minimum number of SRVs required for emergency depressurization open.

MINIMUM INDICATED LEVEL

The highest reactor water level instrument indication which results from off-calibration instrument run temperature conditions when reactor water level is actually at the elevation of the instrument variable leg tap.

MINIMUM NUMBER OF SRVS REQUIRED FOR EMERGENCY DEPRESSURIZATION

The least number of SRVs which correspond to a minimum alternate reactor flooding pressure sufficiently low that the ECCS with the lowest head will be capable of making up the SRV steam flow at the corresponding minimum alternate reactor flooding pressure.

MINIMUM REACTOR FLOODING PRESSURE

The minimum SRV reopening pressure; 50 psid with 5 SRVs open. This pressure is utilized to assure sufficient liquid injection into the reactor to maintain SRVs open and to flood the reactor to the elevation of the main steam lines during the flooding evolution when the reactor is shutdown.

MINIMUM SRV REOPENING PRESSURE

The lowest reactor pressure at which an SRV will fully open and remain fully opened when its control switch is placed in the OPEN position.

MINIMUM STEAM COOLING REACTOR WATER LEVEL

The lowest reactor water level at which the covered portion of the reactor core will generate sufficient steam to preclude any clad temperature in the uncovered portion of the core from exceeding 1500°F. This limit is used during an ATWS event to prevent fuel damage when level is lowered below TAF (Unit 1 only: Figure 18; Unit 2 only: Figure 18A).

STEPS RC/P-23 through RC/P-25

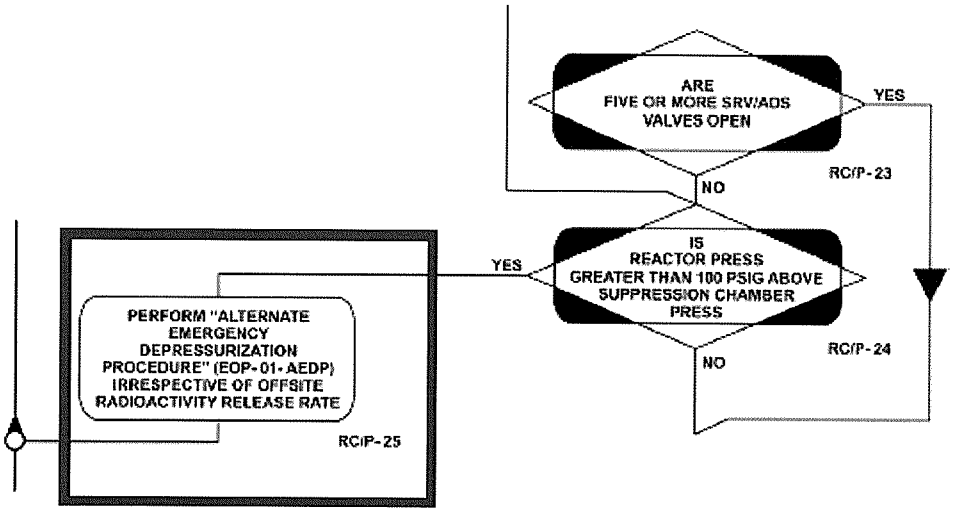

STEP BASES:

The Minimum Number of SRVs Required for Emergency Depressurization (5) is defined to be the least number of SRVs which correspond to a Minimum Alternate Reactor Flooding Pressure sufficiently low that the ECCS with the lowest head will be capable of making up the SRV steam flow at the corresponding Minimum Alternate Reactor Flooding Pressure.

The Minimum SRV Re-opening Pressure is the lowest reactor pressure at which an SRV will remain fully open with its control switch in the open position. The accuracy of the re-opening pressure and the indication available to determine reactor pressure result in conditions such that the SRVs are not always open when the pressure indicated is 50 psig. One hundred psig has been selected as a value which can be used to determine the SRVs have failed to function. When reactor pressure is below this value, depressurization is considered complete and reactor pressure reduction need not be augmented by use of additional systems even if less than the minimum number of SRVs are open. If the number of SRVs specified cannot be opened, the reactor must be depressurized by other means. A list of alternate systems that can be used for depressurizing the reactor is included in the Alternate Emergency Depressurization Procedure, EOP-01-AEDP. However, since event independence must be maintained and specific plant conditions cannot be presumed, no priority regarding system use is indicated. This approach provides an operator the flexibility of being able to use whatever system(s) may be most appropriate under current plant conditions.

ALTERNATE EMERGENCY DEPRESSURIZATION PROCEDURE

1.0 ENTRY CONDITIONS

- As directed by the RC/P section of Reactor Vessel Control Procedure, EOP-01-RVCP

  OR

- As directed by the RC/P section of Level/Power Control, EOP-01-LPC

  OR

- As directed by SAMG Primary Containment Flooding, SAMG-01

2.0 OPERATOR ACTIONS

NOTE:	Manpower:	1 Control Operator 1 Auxiliary Operator 1 Independent Verifier
	Special equipment:	4 jumpers (32, 33, 34, and 35) 1 flathead screwdriver 1 locking screwdriver tape
NOTE:	Performance of this procedure will affect any main steam line leakage control pathways established by EOP-01-SEP-11.	

2.1 **EVACUATE** the Unit 1 and 2 Turbine Buildings using the following actions:

CO: 2.1.1 **SOUND** the Unit 1 and Unit 2 Turbine Building evacuation alarms **AND ANNOUNCE** the evacuation. ☐

CO: 2.1.2 **REQUEST** the SCO to notify the TSC that the Turbine Building is being evacuated due to potential high radiation conditions during the alternate emergency depressurization. ☐

CO: 2.2 **IF** either Unit 1 or Unit 2 Turbine Building ventilation is in service in the once-through lineup, **THEN SECURE** that units' turbine building ventilation (OP-37.3). ☐

Categories

K/A:	SG2.04.17	Tier / Group:	T3
RO Rating:	3.9	SRO Rating:	4.3
LP Obj:	CLS-LP-300-H*002	Source:	NEW
Cog Level:	HIGH	Category 8:	Y

100. An ATWS has occurred on Unit Two:

ARI has been actuated.
No blue lights are lit on the Full Core Display.
Suppression Pool Temperature is 112° F.
The 2A SLC pump has a red light indication.
The 2B SLC pump has a green light indication
The SLC A Squib Valve Continuity white light is lit
The SLC B Squib Valve Continuity white light is extinguished.

Which one of the following identifies the procedure that an AO would be directed to perform based on the above conditions and the resultant effect of those actions?

A. ✓ Perform LEP-02, Section 2 to insert control rods in order to shutdown the reactor by venting the Scram Air Header.

B. Perform LEP-02, Section 6 to insert control rods in order to shutdown the reactor by venting the overpiston area of the control rods.

C. Perform LEP-03, Section 2 to inject boron to shutdown the reactor using RCIC.

D. Perform LEP-03, Section 3 to inject boron to shutdown the reactor using RWCU via the SLC tank.

Feedback

K/A: SG2.04.35
Emergency Procedures / Plan
Knowledge of local auxiliary operator tasks during an emergency and the resultant operational effects.
(CFR: 41.10 / 43.5 / 45.13)

RO/SRO Rating: 3.8/4.0

Objective: CLS-LP-300-J*005
5. Given plant conditions and the Local Emergency Procedures, determine which sections of the Alternate Control Rod Insertion Procedure should be utilized for Control Rod Insertion (EOP-01-LEP-02).

4. Given plant conditions and the Local Emergency Procedures, determine which method of the Alternate Boron Injection is appropriate (EOP-01-LEP-03)

Reference:
0EOP-01-LEP-02

Cog Level: High

Explanation:
Based on the conditions given, determines that scram valves have not opened (no blue lights on full core display) and that Boron is injecting with A pump running (red light on) and B squib valve opened (white light extinguished) so LEP-03 is not required. The pumps discharge into a common header before going to the squib valves. Requires assessment of alternate control rod insertion sections and determines venting the scram air header is appropriate.

Distractor Analysis:
Choice A: Correct Answer

Choice B: Plausible because venting of the over piston area will insert the control rods but would be the inappropriate decision for rod insertion given the conditins. The operational effect is reactor shutdown with control rod insertion.

Choice C: Plausible because suppression pool temperature is greater than 110° F and boron injection is required. With A pump running but the A squib valve not open and no B pump a common misconception is that SLC flow will not occur to the Reactor. this would be correct under different conditions in the stem. The operational effect is reactor shutdown with boron injection.

Choice D: Plausible because suppression pool temperature is greater than 110° F and boron injection is required. With A pump running but the A squib valve not open and no B pump a common misconception is that SLC flow will not occur to the Reactor. this would be correct under different conditions in the stem. The operational effect is reactor shutdown with boron injection.

SRO Only Basis: Assessing plant conditions and prescribing a section of a procedure with which to proceed.

Notes

2.7 **INSERT** control rods by one or more of the following methods:

2.7.1 **DE-ENERGIZE** the scram pilot valve solenoids **AND VENT** the scram air header, Section 2 on Page 9. ☐

2.7.2 **RESET** RPS **AND INITIATE** a manual scram, Section 3 on Page 14. ☐

2.7.3 **SCRAM** individual rods with the scram test switches, Section 4 on Page 17. ☐

2.7.4 **INSERT** control rods with the Reactor Manual Control System, Section 5 on Page 21. ☐

2.7.5 **VENT** the over piston area of control rods, Section 6 on Page 22. ☐

2.2 **INJECT** boron with one or more of the following systems:

NOTE:	System(s) should be selected in order listed and based upon system availability and accessibility.

CO: - CRD, Section 1 on page 3 ☐

NOTE:	HPCI/RCIC should be used only if suction is from the CST.

CO: - HPCI/RCIC, Section 2 on page 14 ☐

CO: - RWCU via SLC tank, Section 3 on page 21 ☐

CO: - RWCU with borax, Section 4 on page 31 ☐

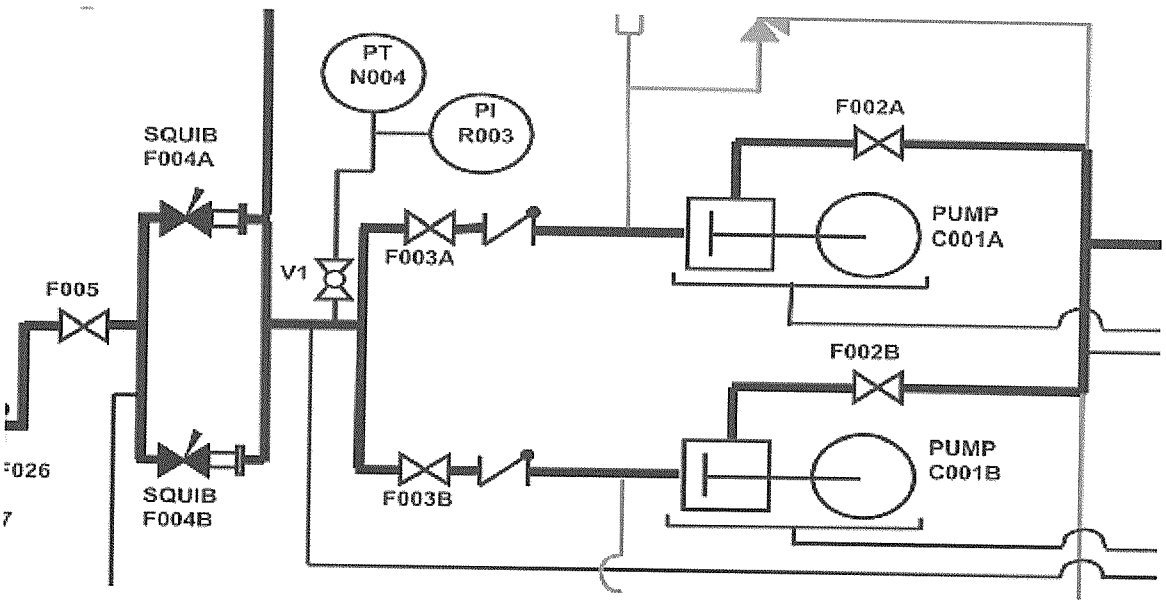

Categories

K/A:	SG2.04.35	Tier / Group:	T3
RO Rating:	3.8	SRO Rating:	4.0
LP Obj:	CLS-LP-300-J*005	Source:	NEW
Cog Level:	HIGH	Category 8:	