1. The CRD system is being restarted IAW 2OP-08, Control Rod Drive Hydraulic System Operating Procedure, following a trip of the running CRD pump with the following plant conditions:

2A CRD pump	Running
C12-F002B, Flow Control Valve 2B	Auto
CRD system flow	45 gpm
C12-PCV-F003, Drive Pressure Vlv	Full open

The operator is directed to throttle the C12-PCV-F003 to establish drive water DP between 260 and 275 psid.

Which one of the following choices correctly completes the statement below as the operator throttles the C12-PCV-F003?

The C12-F002B will throttle __(1)__ and drive water DP will __(2)__.

A. (1) open
   (2) lower

B. (1) closed
   (2) lower

C. (1) open
   (2) rise

D. (1) closed
   (2) rise

Feedback

K/A: 201001 A1.03
Ability to predict and/or monitor changes in parameters associated with operating the CONTROL ROD DRIVE HYDRAULIC SYSTEM controls including:
CRD system flow
(CFR: 41.5 / 45.5)

RO/SRO Rating: 2.9/2.8

Objective: CLS-LP-08Obj 6c
Given plant and CRDHS conditions, predict the values for the following CRDH system parameters:
c. CRDHS Total System Flow Rate

Reference: SD-08

Cog Level: low

Explanation: With the given conditions (F003 full open) the drive water pressure will be low. The closing of the F003 would reduce the size of the hole in the flowpath thereby raising pressure. With the F002 in auto, it would have to open to maintain the desired flowrate. All of the plausibilities deal with the relationship of the flow control valve to the pressure control valve making any of them possible depending on where the student thinks the valves are.

Distractor Analysis:
Choice A: Plausible because the F002 will open and if the F003 is in a different portion of the flowpath the pressure would drop.

Choice B: Plausible because if the F002 and F003 were in a different alignment in the flowpath this would be possible.

Choice C: Correct answer, see explanation

Choice D: Plausible because if the F002 was in a different alignment this would be possible, i.e. on the drive water header.

Notes

Closing the F003 would reduce the size of the hole in the flowpath thereby raising pressure so the F002 would have to open to maintain the desired flowrate.

FIGURE 08- 1

CRD HYDRAULIC SYSTEM

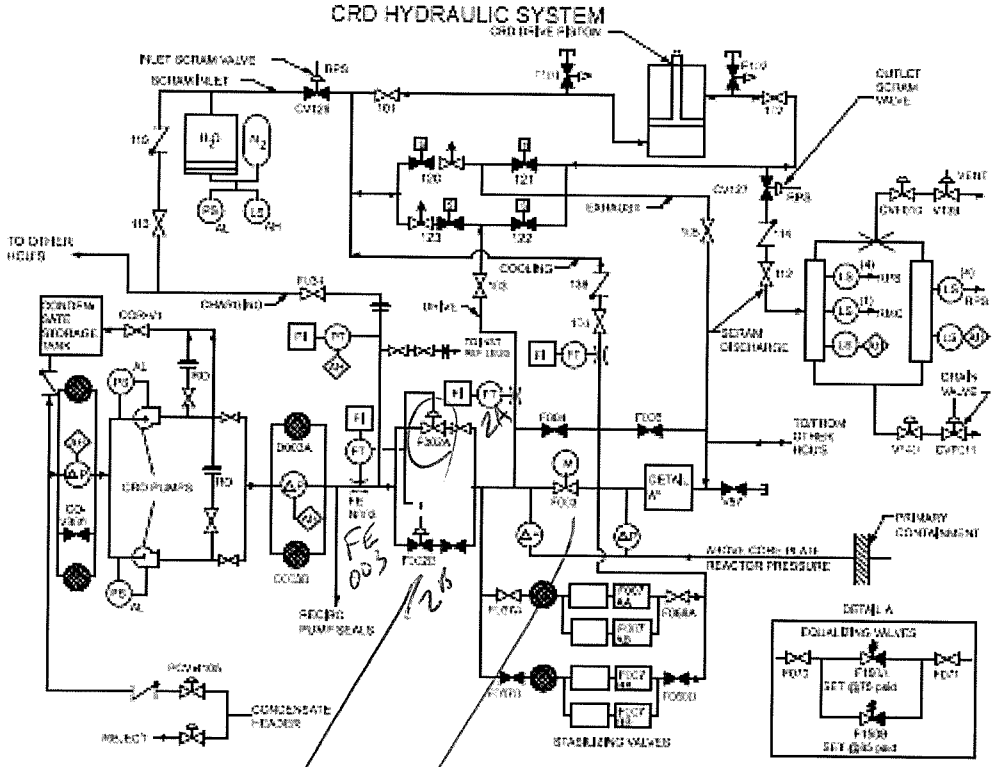

SD-08	Rev. 10	Page 61 of 68

Categories

K/A:	201001 A1.03	Tier / Group:	T2G2
RO Rating:	2.9	SRO Rating:	2.8
LP Obj:	08-6C	Source:	BANK
Cog Level:	HIGH / 2A	Category 8:	Y

F002B

F003

FIGURE 08- 1

CRD HYDRAULIC SYSTEM

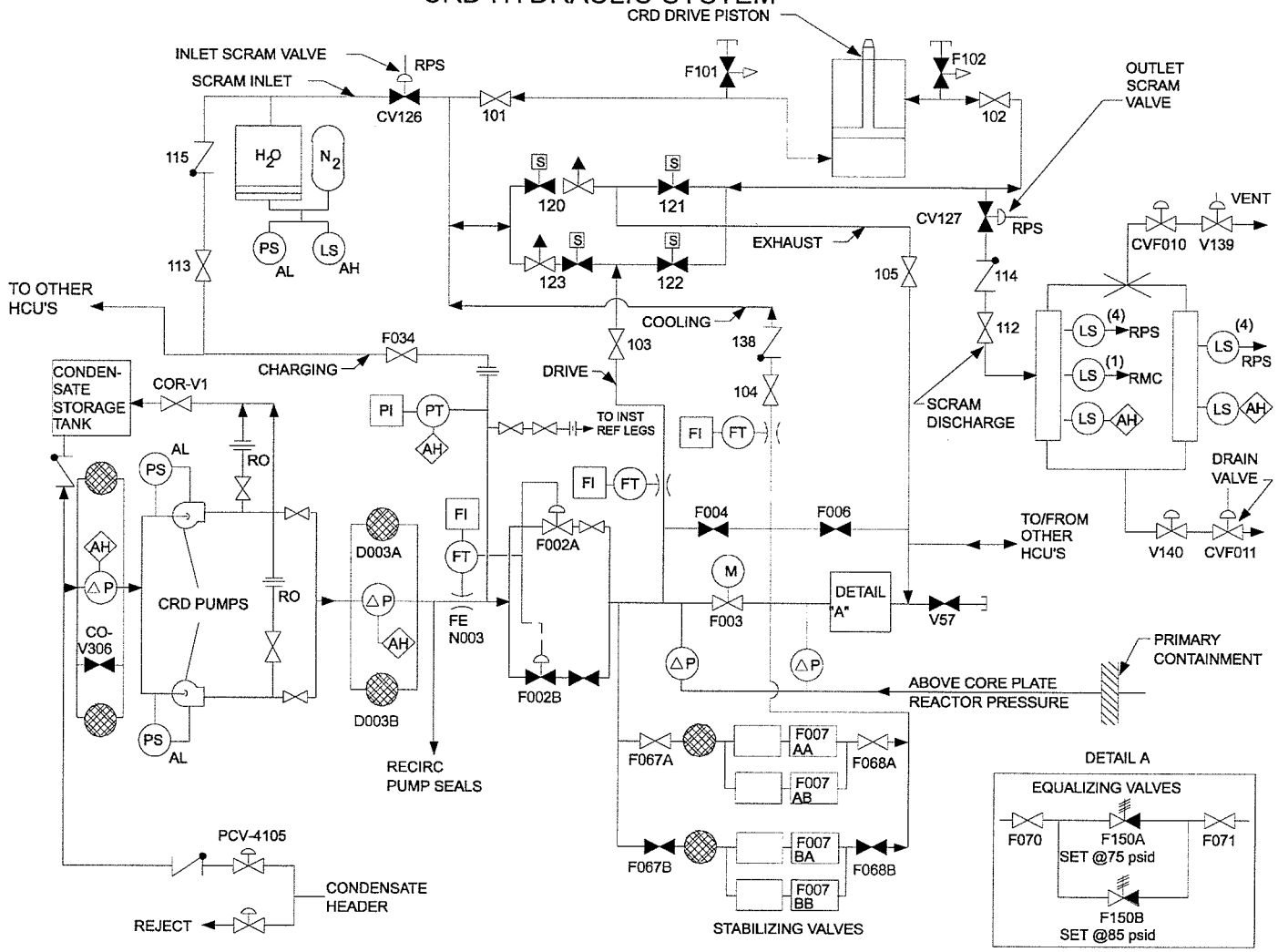

2. Which one of the following identifies how the Reactor Manual Control System will be affected by a total loss of the Uninteruptible Power Supply (UPS)?

Control rods ____(1)____.
Control rod position ____(2)____.

A. (1) can be inserted using the Emergency In switch
(2) cannot be determined from any location

B.✓ (1) cannot be inserted by any method other than scram
(2) cannot be determined from any location

C. (1) can be inserted using the Emergency In switch
(2) can be determined only from ERFIS or the process computer

D. (1) cannot be inserted by any method other than scram
(2) can be determined only from ERFIS or the process computer

Feedback

K/A: 201002 K6.01
Knowledge of the effect that a loss or malfunction of the following will have on the REACTOR MANUAL CONTROL SYSTEM:
Select matrix power
(CFR: 41.7 / 45.7)

RO/SRO Rating: 2.5/2.6

Objective: CLS-LP-07 Obj 12
List the power supplies to the Reactor Manual Control and Rod Position Indication Systems.

Reference: SD-52 / SD-07

Cog Level: low

Explanation: This meets the ka by a loss of UPS which is the power supply to the select matrix and then asking how rods can be moved.
UPS provides power to the select matrix. With no rod being able to be selected, the operator can only insert rods via a scram. UPS also provides power to the Full core and four rod displays, which would be lost. RPIS is also lost. With the rod posiition indication gone then ERFIS / process computer will display show unkown (??) for each rod.

Distractor Analysis:
Choice A: Plausible because the Emergency In switch bypasses the RMCS logic, but there is no power to select a rod to move.

Choice B: Correct answer, see explanation

Choice C: Plausible because the Emergency In switch bypasses the RMCS logic, but there is no power to select a rod to move. ERFIS/process computer has power but the RPIS input is lost.

Choice D: Plausible because ERFIS/process computer has power but the RPIS input is lost.

Notes

4.2.1. Vital UPS Failure

A complete loss of Vital UPS power will have the following effects (Additional information available in 0OI-50.5):

Reactor Manual Control - Control rods cannot be moved by normal means (scram function is unaffected). Power is lost to the rod position display panel. Full core display is lost. Since the rod position information system is lost the NIs must be closely monitored to ensure the reactor is shutdown and remains shutdown during any subsequent cooldown.

SD-52	Rev. 3	Page 21 of 43

3.1.1 Rod Selection

As was briefly mentioned earlier, a control rod is selected by the operator at the RMCS select pushbutton and relay module. This module, which is located on P603, has 137 magnetically latched double-pole, double throw pushbutton switches arranged in an overhead view of the core. Power is provided to the switches by 28 VDC power supplies that, in turn, receive power from the UPS. A rod select power switch at P603 controls the power to the select panel.

SD-07	Rev. 6	Page 10 of 57

Categories

K/A:	201002 K6.01	Tier / Group:	T2G2
RO Rating:	2.5	SRO Rating:	2.6
LP Obj:	07-12	Source:	BANK
Cog Level:	LOW	Category 8:	Y

3. Which one of the following defines the purpose of the Rod Worth Minimizer (RWM) IAW Technical Specifications?

A. Ensures that fuel enthalpy does not exceed 280 cal/gm during a control rod drop accident when power is ≥ 19.1%.

B. Ensures that fuel enthalpy does not exceed 280 cal/gm during a control rod drop accident when reactor power is ≤ 8.75%.

C. Ensures that the MCPR remains ≥1.11, while withdrawing control rods, when power is ≥ 19.1%.

D. Ensures that the MCPR remains ≥1.11, while withdrawing control rods, when reactor power is ≤ 8.75%.

Feedback

K/A: 201006 K5.01
Knowledge of the operational implications of the following concepts as they apply to ROD WORTH MINIMIZER SYSTEM (RWM) (PLANT SPECIFIC) :
Minimize clad damage if a control rod drop accident (CRDA) occurs
P-Spec (Not-BWR6) (CFR: 41.5 / 45.3)

RO/SRO Rating: 3.3/3.7

Objective: LOI-CLS-LP-07.1 Obj. 1
State the purpose of the RWM

Reference: TS Bases

Cog Level: low

Explanation:
OPERABILITY of the RWM, is required in MODES 1 and 2 when THERMAL POWER is ≤ 8.75% RTP. When THERMAL POWER is > 8.75% RTP, there is no possible control rod configuration that results in a control rod worth that could exceed the 280 cal/gm fuel damage limit during a CRDA.
Since the failure consequences for UO2 have shown that sudden fuel pin rupture requires a fuel energy deposition of approximately 425 cal/gm, the fuel damage limit of 280 cal/gm provides a margin of safety from significant core damage which would result in release of radioactivity. Generic evaluations of a design basis CRDA (i.e., a CRDA resulting in a peak fuel energy deposition of 280 cal/gm) have shown that if the peak fuel enthalpy remains below 280 cal/gm

Distractor Analysis:
Choice A: Plausible because the RWM enforces control rod movement from all rods full-in to the Low Power Setpoint (LPSP). (19.1%)

Choice B: Correct answer, see explanation

Choice C: Plausible because the RWM enforces control rod movement from all rods full-in to the Low Power Setpoint (LPSP). (19.1%) and the RBM ensures MCPR limits.

Choice D: Plausible because the RBM is what ensures the MCPR limits.

BASES

APPLICABLE SAFETY ANALYSES, LCO, and APPLICABILITY (continued)

2. Rod Worth Minimizer

The RWM enforces the banked position withdrawal sequence (BPWS) to ensure that the initial conditions of the CRDA analysis are not violated. The analytical methods and assumptions used in evaluating the CRDA are summarized in References 11 and 12. The BPWS requires that control rods be moved in groups, with all control rods assigned to a specific group required to be within specified banked positions. Requirements that the control rod sequence is in compliance with the BPWS are specified in LCO 3.1.6, "Rod Pattern Control."

The RWM Function satisfies Criterion 3 of 10 CFR 50.36(c)(2)(ii) (Ref. 3).

The RWM is a microprocessor-based system with the principle task to reinforce procedural control to limit the reactivity worth of control rods under lower power conditions. Only one channel of the RWM is available and required to be OPERABLE. Special circumstances provided for in the Required Action of LCO 3.1.3, "Control Rod OPERABILITY," and LCO 3.1.6 may necessitate bypassing the RWM to allow continued operation with inoperable control rods, or to allow correction of a control rod pattern not in compliance with the BPWS. As required by these conditions, one or more control rods may be bypassed in the RWM or the RWM may be bypassed. However, the RWM must be considered inoperable and the Required Actions of this LCO followed since the RWM can no longer enforce compliance with the BPWS.

Compliance with the BPWS, and therefore OPERABILITY of the RWM, is required in MODES 1 and 2 when THERMAL POWER is ≤ 8.75% RTP. When THERMAL POWER is > 8.75% RTP, there is no possible control rod configuration that results in a control rod worth that could exceed the 280 cal/gm fuel damage limit during a CRDA (Refs. 5 and 6). In MODES 3 and 4, all control rods are required to be inserted into the core;

Categories

K/A:	201006 K5.01	Tier / Group:	T2G2
RO Rating:	3.3	SRO Rating:	3.7
LP Obj:	7.1-1	Source:	BANK
Cog Level:	LOW	Category 8:	Y

4. Unit One is at rated power when the RO receives the following alarms:

RHR LOOP B SYS PRESS LOW
SUPPRESSION CHAMBER LVL HI/LO

Which one of the following identifies the cause of these alarms?

Suppression chamber water level is ____(1)____ due to improper seating of ____(2)____ only.

A. (1) low
(2) RHR HX 1B Drain To Suppression Pool Valve, E11-F011B

B. (1) low
(2) Loop B Minimum Flow Bypass To Suppression Pool Valve, E11-F007B

C. (1) high
(2) RHR HX 1B Drain To Suppression Pool Valve, E11-F011B

D. (1) high
(2) Loop B Minimum Flow Bypass To Suppression Pool Valve, E11-F007B

Feedback

K/A: 203000 K1.02
Knowledge of the physical connections and/or causeeffect relationships between RHR/LPCI: INJECTION MODE (PLANT SPECIFIC) and the following:
Suppression Pool
(CFR: 41.2 to 41.9 / 45.7 to 45.8)

RO/SRO Rating: 3.9/3.9

Objective: CLS-LP-32.1 Obj 6
Identify the function of the Keepfill system, the systems/components supplied, and the effects of it becoming inoperable.

Reference: 1APP-A-03

Cog Level: high

Explanation:this meets the KA because the RHR system is in a standby lineup it needs to be kept filled to prevent water hammer as it is started. this question is asking about the connection to the torus if the keepfill pressure then is reduced and it is leaking to the torus.
Keep fill is supplied to the RHR loop, if the F007 (single valve in the flowpath) is leaking by the low pressure alarm would occur while filling the suppression pool so level will be high.
This identifies the physical connection between the standby RHR loop for injection and the Suppression pool.

Distractor Analysis:
Choice A: Plausible because the F011is a drain flowpath, but it has a double isolation valve. This drain path is to Radwaste also.

Choice B: Plausible because the examinee may think that due to head pressure the torus may backfill into the RHR line since it is depressurized.or that this line may be external to the torus as the drain lines may go to radwaste.

Choice C: Plausible because the F011is a drain flowpath, but it has a double isolation valve. This drain path is to Radwaste also.

Choice D: Correct answer, see explanation

Notes

RHR LOOP B SYS PRESS LOW

AUTO ACTIONS

NONE

CAUSE

1. Keepfill Station Pressure Control Valve, E11-PCV-F100, failure or valve lineup incorrect.
2. Discharge header not charged or leaking.
3. If in shutdown cooling and the RPV is NOT pressurized, discharge header pressure is below alarm setpoint due to E11-F003B and/or E11-F048B valve position.
4. If operating in full flow test mode, discharge header pressure is below alarm setpoint when flow is increased to near maximum.
5. Circuit malfunction.

OBSERVATIONS

1. Keepfill Station Pressure Control Valve, E11-PCV-F100, outlet pressure as read locally on E11-PI-2676 is less than 41 psig.

ACTIONS

1. Verify that the Loop B Minimum Flow Bypass To Suppression Pool Valve, E11-F007B, is closed.
2. If the Loop B Minimum Flow Bypass To Suppression Pool Valve, E11-F007B, is not properly seated, cycle the valve.

Categories

K/A:	203000 K1.02	Tier / Group:	T2G1
RO Rating:	3.9	SRO Rating:	3.9
LP Obj:	31.2-6	Source:	NEW
Cog Level:	HIGH	Category 8:	Y

FIGURE 17-5
Shutdown Cooling Warm-Up Typical for Both Loops of RHR

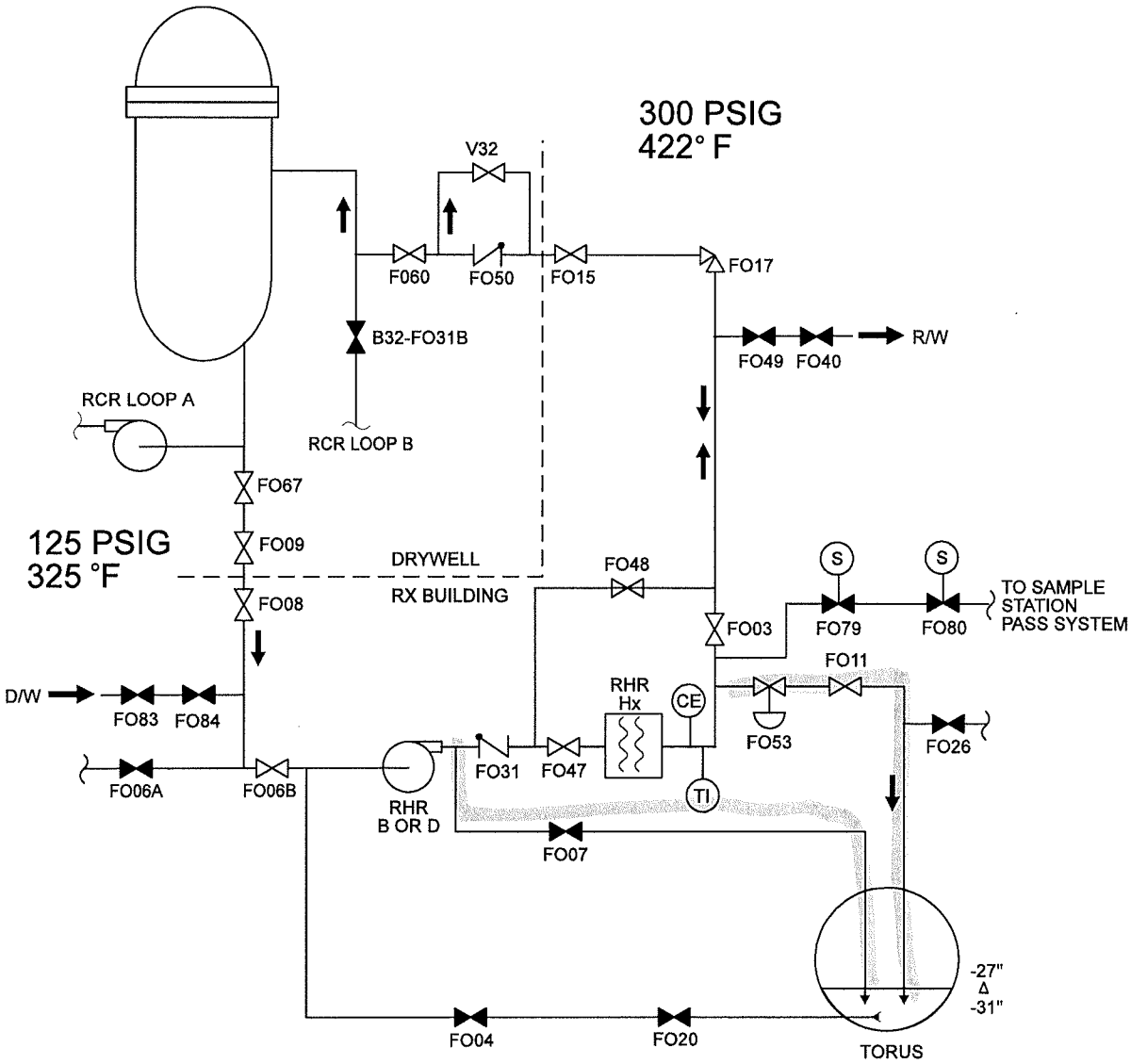

FIGURE 17-2
Suppression Pool Cooling Mode

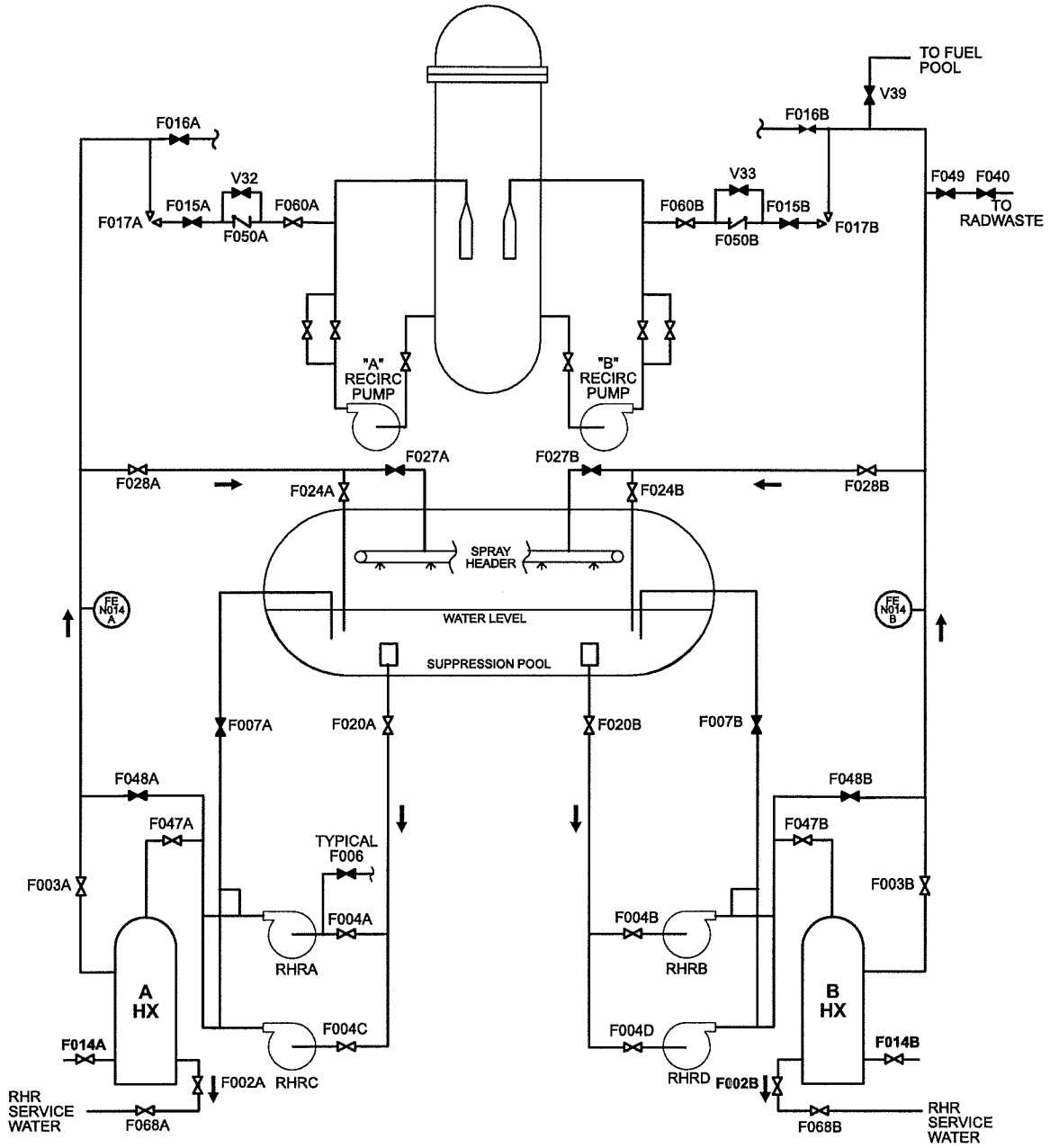

FIGURE 17-2A
LPCI Mode

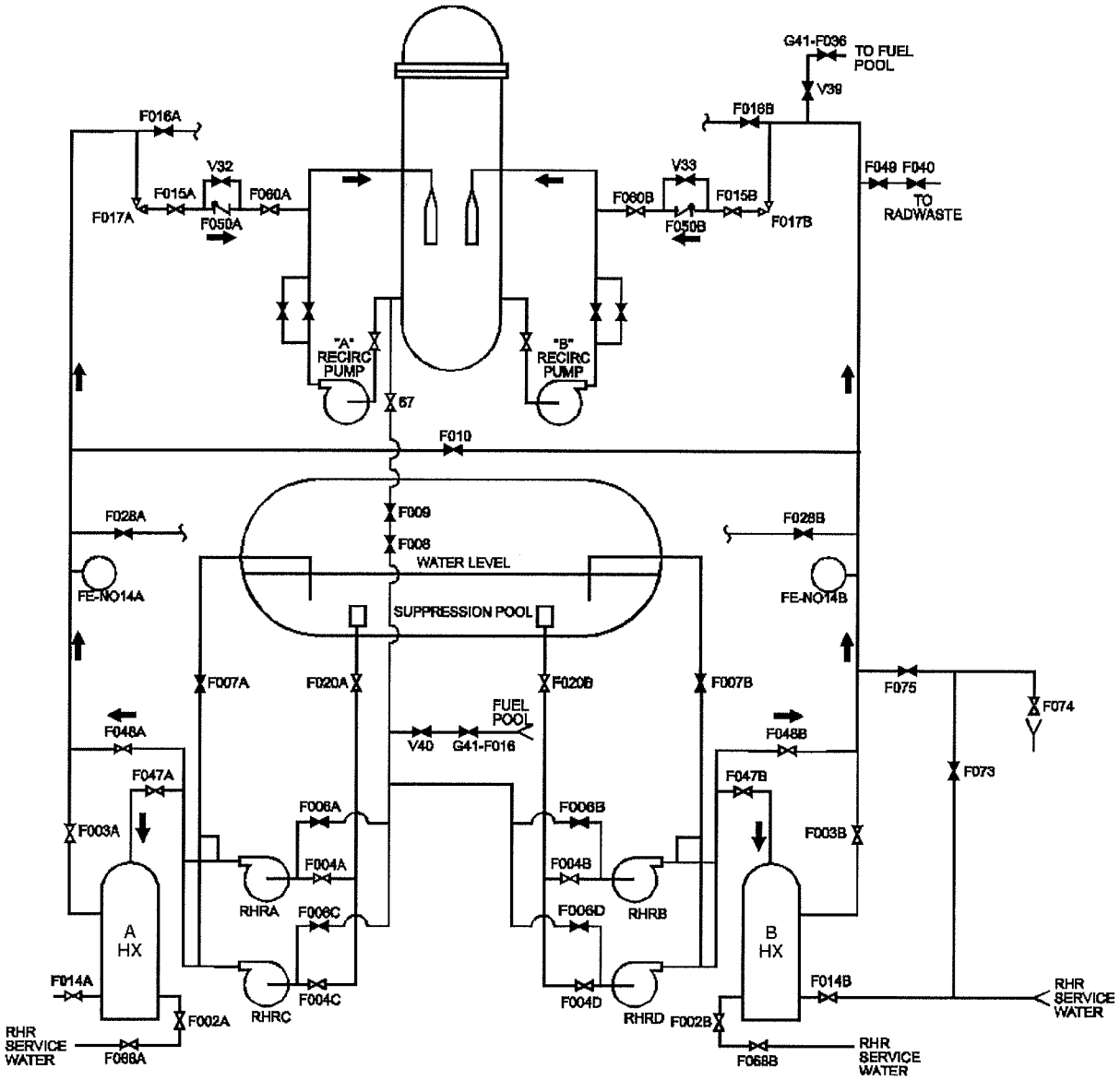

5. Unit Two had just been placed in Cold Shutdown when off-site power is lost. Operators are having difficulty re-establishing Shutdown Cooling.

Which one of the following parameters must be monitored for determination of a mode change to Hot Shutdown?

A.✓ Reactor saturation temperature.

B. Reactor bottom head temperature.

C. Reactor recirculation loop temperature.

D. RHR heat exchanger inlet temperature.

Feedback

K/A: 205000 G2.04.21
Knowledge of the parameters and logic used to assess the status of safety functions, such as reactivity control, core cooling and heat removal, reactor coolant system integrity, containment conditions, radioactivity release control, etc.
Shutdown Cooling System (RHR Shutdown Cooling Mode)
(CFR: 41.7 / 43.5 / 45.12)

RO/SRO Rating: 4.0/4.6

Objective: CLS-LP-307-B Obj. 1g
given plant conditions, monitor cooldown rate per PT-01.7

Reference: AOP-15

Cog Level: High (assessing plant conditions and determining the appropriate indication that is available)

Explanation:
Natural circulation cannot be depended on to provide adequate flow through the bottom head region or the recirculation loops. The recirculation loop suction temperatures and bottom head temperatures therefore cannot be utilized for vessel coolant temperature monitoring for indication of boiling. Under natural circulation conditions, reactor vessel pressure must be monitored for coolant temperature determination. (AOP-15.0). The logic is that in a saturated system pressure is equivelant to the saturation temperature.

Distractor Analysis:
Choice A: correct answer, see explanation

Choice B: Plausible because under other circumstances (RWCU is in service) this is a viable option.

Choice C: Plausible because under other circumstances (recirc is in service) this is a viable option.

Choice D: Plausible because under other circumstances (SDC is in service) this is a viable option.

Notes

CAUTION

Natural circulation can **NOT** be depended on to provide adequate flow through the bottom head region or the recirculation loops. The recirculation loop suction temperatures and bottom head temperatures therefore can **NOT** be utilized for vessel coolant temperature monitoring for indication of boiling. Under natural circulation conditions, reactor vessel pressure must be monitored for coolant temperature determination. If coolant temperature was initially less than 212°F, pressure must be closely monitored for indications of a trend of increasing pressure. If this trend is established, it must be assumed that 212°F has been exceeded, boiling is occurring, and a mode change has taken place.

0AOP-15.0	Rev. 23	Page 4 of 21

3.3.1 Reactor Recirc Pump running **AND** loop is **NOT** isolated from the Reactor, **THEN** use Recirculation Suction Temperatures read on *B32-TR-R650.*

3.3.2 RHR Pump is running in Shutdown Cooling mode with the Heat Exchanger aligned as follows:

1. RHR HX in service: Use RHR HX 2A(B) Inlet Temperature as read on *E41-TR-R605* Point 1(2), on Panel H12-P614.

3.4 Bottom Head temperature during heatup and cooldown may be determined in a number of ways depending on the status of the RWCU System and the Reactor Recirc Pumps

2PT-01.7	Rev. 7	Page 4 of 11

Categories

K/A:	205000 G2.04.21	Tier / Group:	T2G1
RO Rating:	4.0	SRO Rating:	4.6
LP Obj:	307B-1G	Source:	BANK
Cog Level:	HIGH	Category 8:	Y

6. Unit One is at rated power when a steam line break causes the temperatures in the ECCS pipe tunnel to exceed 190°F two minutes ago.

Which one of the following identifies the current status of the Group 4 and Group 5 isolation valves?

A. Group 4 valves closed only.

B. Group 5 valves closed only.

C. Both Group 4 and Group 5 valves closed.

D. Neither Group 4 nor Group 5 valves closed.

Feedback

K/A: 206000 K4.02
Knowledge of HIGH PRESSURE COOLANT INJECTION SYSTEM design feature(s) and/or interlocks which provide for the following:
System isolation: BWR-2,3,4
(CFR: 41.7)

RO/SRO Rating: 3.9/4.0

Objective: LOI-CLS-LP-012-A Obj 6
Given plant conditions, determine if a Group Isolation should occur.

Reference: SD-12

Cog Level: low

Explanation:
RCIC Group 5 has 27 min time delay to allow HPCI isolation to occur and possibly isolate the leak leaving RCIC available.

Distractor Analysis:
Choice A: Correct answer, see explanation

Choice B: Plausible because it may be thought that the time delay is on the Grp 4 instead of the Grp 5.

Choice C: Plausible if they do not apply any time delays.

Choice D: Plausible if they do apply the time delay to both groups.

Notes

ISOLATION GROUP	ISOLATION SIGNAL	TRIP SETPOINT		NOTES
		Tech Spec. Allowable Value	Actual ~~(Note 1)~~	
Group 4	High Steam Flow	≤ 275%	220%	Note 5
	Low Steam Pressure	≥ 104 psig	115 psig	
	High Turb Exh Pressure	≤ 9 psig	7 psig	
	Steam Line Area Hi Temp	≤ 200°F	165°F	
	Steam Line Tunnel High Amb Temp	≤ 200°F	165°F/190°F	
	Steam Line Tunnel dT High	≤ 50°F	47°F	
	Equip Area High Temp	≤ 175°F	165°F	
Group 5	High Steam Flow	≤ 275%	220%	Note 5
	Low Steam Pressure	≥ 53psig	70 psig	
	High Turb Exh Pressure	≤ 6 psig	5 psig	
	Steam Line Area Hi Temp	≤ 175°F	165°F	Note 4
	Steam Line Tunnel High Amb Temp	≤ 200°F	165°F/190°F	Note 4
	Steam Line Tunnel dT High	≤ 50°F	47°F	Note 4
	Equip Area High Temp	≤ 175°F	165°F	
	Equip Area dT High	≤ 50°F	47°F	

Note 1: All "Actual" values from TRM
Note 2: Stack radiation high level is calculated in accordance with the Offsite Dose Calculation Manual.
Note 3: After a 28.5 minute time delay
Note 4: After 27 minute time delay
Note 5: After a 5 second time delay
*Note 6: Specific "Actual" values from EOP User's Guide, Attachment 1

Categories

K/A:	206000 K4.02	Tier / Group:	T2G1
RO Rating:	3.9	SRO Rating:	4.0
LP Obj:	12-6	Source:	BANK
Cog Level:	LOW	Category 8:	Y

7. A Dual Unit Loss of Offsite Power occurs with DG1 under clearance and the following electrical plant lineup:

4 kV E-Busses	Energized from their respective available DGs
480 V E-Busses	E5 and E8 only are de-energized

Then a LOCA signal is received on Unit Two.

Which one of the following correctly completes the statement below concerning the ability of Unit Two Core Spray to restore reactor water level?

The Core Spray Pump in ___(1)___ running and injection is available through the ___(2)___ Core Spray Inboard Injection Valve.

A. (1) Loop A only is
(2) 2E21-F005A

B. (1) Loop B only is
(2) 2E21-F005B

C✓ (1) both Loops are
(2) 2E21-F005A

D. (1) both Loops are
(2) 2E21-F005B

Feedback

K/A: 209001 K3.01
Knowledge of the effect that a loss or malfunction of the LOW PRESSURE CORE SPRAY SYSTEM will have on following:
Reactor water level
(CFR: 41.7 / 45.4)

RO/SRO Rating: 3.8/3.9

Objective: CLS-LP-18 Obj. 13b
List the power supplies for each of the following Core Spray System components:
b. MOV's

Reference: SD-18

Cog Level: High

Explanation: This meets the KA because the power loss is causing a loss of CS and then determining what loops are available to inject (raise reactor water level) based on this loss.
A Core Spray Initiation Signal is present and power is available to both Core Spray pumps, E3 and E4 are energized. With the power loss to E8, MCC 2XD will not have power and the B loop Core Spray valves will be de-energized. So both pumps would be running and injection would only be available from A Loop of Core Spray.

Distractor Analysis:
Choice A: Plausible because loop A pump is running and the injection path is available through A loop. Wrong because the B loop pump is also running.

Choice B: Plausible because the loop pump has power but the injection valve does not. May think that valve power comes from the opposite unit same division similar to the RHR arrangement. The configuration of RHR pumps has power from the opposite unit for the pumps so with a loss of E1 makes a loss of CS pump A plausilbe.

Choice C: Correct answer, see explanation

Choice D: Plausible because both pumps do have power but the B injection valve does not. May think that valve power comes from the opposite unit same division like RHR does.

Notes

3.2.1 Automatic Initiation

The following auto initiation signals will cause the Core Spray System to operate as necessary to perform its intended function:

Reactor Vessel Low Water Level 3, LL3	Tech. Spec.	≥ 13"
	Actual	45"

OR

High Drywell Pressure	Tech. Spec.	≤ 1.8 psig
	Actual	1.7 psig

AND

Reactor Low Pressure	Tech. Spec.	≥ 402 psig & < 425 psig
	Actual	410 psig

The inboard and outboard isolation valves are powered from the following motor control centers:

Valve Number	MCC	Compartment Number
E21-F004A	1XC(2XC)	DT0
E21-F004B	1XD(2XD)	DW5
E21-F005A	1XC(2XC)	DT1
E21-F005B	1XD(2XD)	DW6

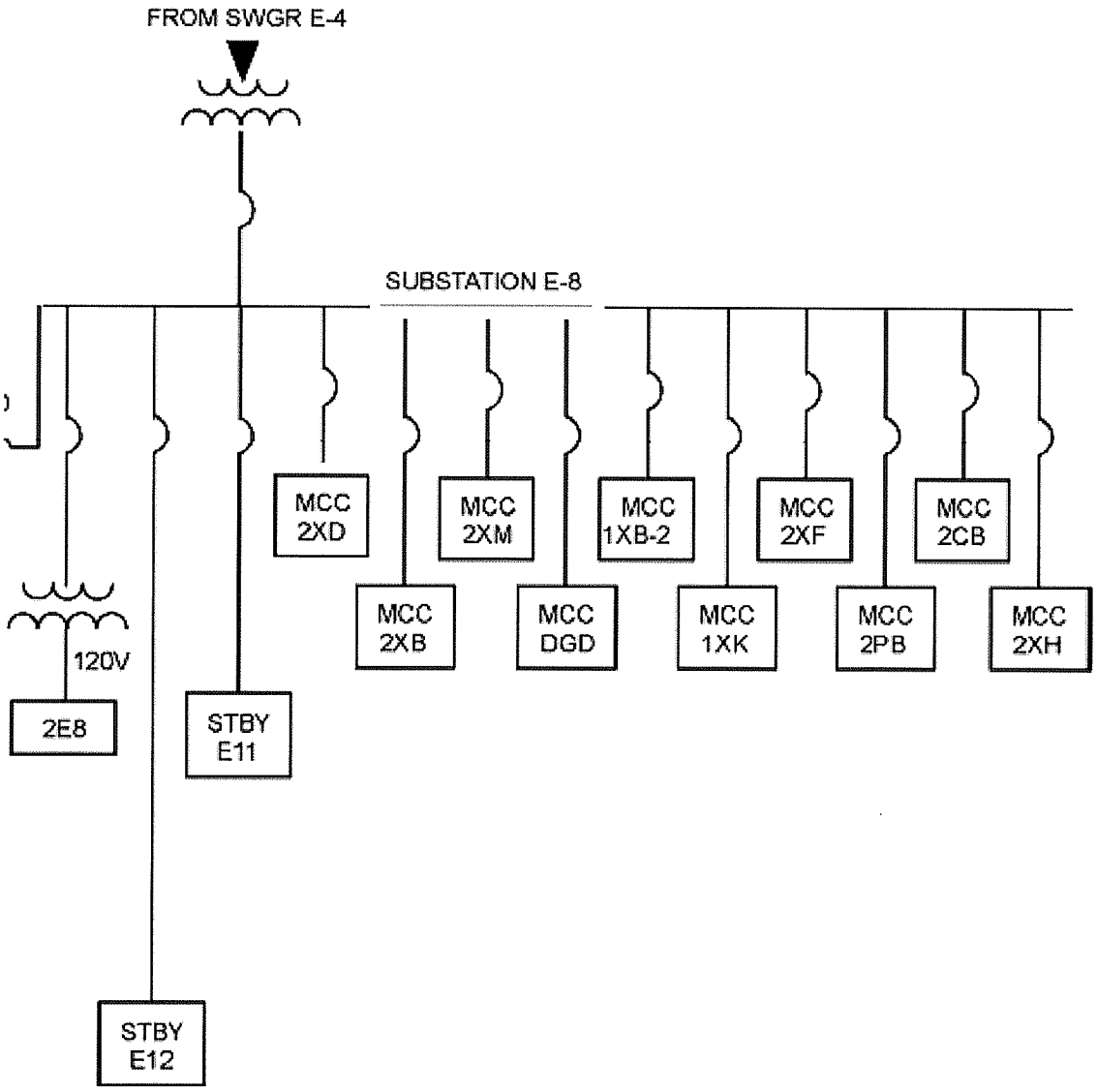

Categories

K/A:	209001 K3.01	Tier / Group:	T2G1
RO Rating:	3.8	SRO Rating:	3.9
LP Obj:	18-13B	Source:	NEW
Cog Level:	HIGH	Category 8:	

8. CS Pump 1A is running for surveillance testing when a Loss of Off-Site Power occurs. Emergency Bus E1/DG1 conditions are:

DG1	No Load Light lit
DG1	Available Light lit
Bus E1	Undervoltage Alarm sealed in

Which one of the following identifies the cause of the above indications?

A. DG1 failed to reach rated speed.

B. DG1 failed to reach rated terminal voltage.

C. Substation E5 feeder breaker failed to trip.

D. Blown control power fuses for CS Pump 1A.

Feedback

K/A: 209001 K3.03
Knowledge of the effect that a loss or malfunction of the LOW PRESSURE CORE SPRAY SYSTEM will have on following:
Emergency generators
(CFR: 41.7 / 45.4)

RO/SRO Rating: 2.9/3.0

Objective: CLS-LP-39 Obj. 12
Given plant conditions, determine if permissives are satisfied for the DG output breaker to close.

Reference: SD-39

Cog Level: high

Explanation:this meets the KA because the malfunction (loss of control power to the CS pump) causes the DG not to be able to automatically close onto the E-bus.
CS pump 1A is powered from bus E1 and must load strip prior to EDG #1 O/P breaker closure.

Distractor Analysis:
Choice A: Plausible because the output breaker will not close if this condition is not met, but rated speed is 514 rpm.

Choice B: Plausible because the output breaker will not close if this condition is not met, but the No Load light is lit which is from speed and voltage.

Choice C: Plausible because E1 is required to load strip before the output breaker will close, but E5 is not one of the breakers that will load strip.

Choice D: Correct answer, see explanation

Notes

Automatic closure of the Diesel output breaker onto its respective emergency bus will occur if:

- The breaker ASSD switch is in NORMAL.
- The Diesel Generator is operating at proper voltage and frequency.
- No electrical faults exist on the Diesel Generator.
- Undervoltage on the E bus exists.
- All E bus loads have been stripped (with the exception of the 480 VAC Substation) the Slave breaker is open and no cross tie breakers are closed.

Unit Available Running

Indicates the diesel is running at rated speed and voltage with the output breaker open.

Categories

K/A:	209001 K3.03	Tier / Group:	T2G1
RO Rating:	2.9	SRO Rating:	3.0
LP Obj:	39-12	Source:	BANK
Cog Level:	HIGH	Category 8:	Y

9. Which one of the following identifies the relationship between the SLC system and Core Spray Line Break Detection differential pressure instrument?

The ____(1)____ leg of this DP instrument senses ____(2)____ core plate pressure via the SLC/Core Differential Pressure penetration.

A. (1) variable
   (2) below

B. (1) variable
   (2) above

C. (1) reference
   (2) below

D. (1) reference
   (2) above

Feedback

K/A: 211000 K1.01
Knowledge of the physical connections and/or cause effect relationships between STANDBY LIQUID CONTROL SYSTEM and the following:
Core spray line break detection: Plant-Specific
(CFR: 41.2 to 41.9 / 45.7 to 45.8)

RO/SRO Rating: 3.0/3.3

Objective: CLS-LP-18 Obj. 10
Explain the principle of operation of the CS Line Break Detection Instrumentation

Reference: SD-18

Cog Level; low

Explanation:
This system is comprised of a differential pressure detector which provides Control Room annunciation on detected high DP. The high pressure reference leg of this instrument is exposed to above core plate pressure via the SLC/Core Differential Pressure penetration. The low pressure of this instrument is normally exposed to above core pressure via the Core Spray injection line. This results in the instrument normally measuring core DP (not including core plate DP).

Distractor Analysis:
Choice A: Plausible because the examinee may confuse the reference and variable legs and SLC does discharge below the core plate

Choice B: Plausible because the examinee may confuse the reference and variable legs

Choice C: Plausible because it is the reference leg and SLC does discharge below the core plate.

Choice D: Correct answer, see explanation

Notes

This system is comprised of a differential pressure detector which provides Control Room annunciation on detected high ΔP. The high pressure reference leg of this instrument is exposed to above core plate pressure via the SLC/Core Differential Pressure penetration. The low pressure of this instrument is normally exposed to above core pressure via the Core Spray injection line. This results in the instrument normally measuring core ΔP (not including core plate ΔP).

A break in the Core Spray injection line between the reactor vessel penetration and the core shroud would expose the low pressure side of the instrument to the lower pressure of the region outside the shroud. This would be sensed as an increased differential pressure and Control Room annunciator would alert the Operator. Although other indications would be available, this alarm would also indicate a break in the line between the E21-F006B(A) check valve and the reactor vessel penetration.

The Core Spray pipe break detection instruments are located on the Reactor Building 20' elevation.

Categories

K/A:	211000 K1.01	Tier / Group:	T2G1
RO Rating:	3.0	SRO Rating:	3.3
LP Obj:	18-10	Source:	BANK
Cog Level:	LOW	Category 8:	Y

10. Which one of the following identifies which EPA breakers that will trip on a loss of 480 VAC Substation E7?

RPS MG set __(1)__ EPA breakers __(2)__.

A. (1) A
(2) 1 & 2 only

B. (1) B
(2) 3 & 4 only

C✓ (1) A
(2) 1 & 2 and alternate source EPA breakers 5 & 6

D. (1) B
(2) 3 & 4 and alternate source EPA breakers 5 & 6

Feedback

K/A: 212000 K2.01
Knowledge of electrical power supplies to the following:
RPS motor-generator sets
(CFR: 41.7)

RO/SRO Rating: 3.2/3.3

Objective: CLS-LP-03 Obj 18a
State the power supplies for the following:
a. RPS MG Set A

Reference: SD-03

Cog Level: Low

Explanation:
Power for the Motor Generator Sets is tapped off two phases of the normal 480 VAC MC 1CA/1CB (2CA/2CB) power supply for the motor through a stepdown transformer (480V to 120V) from E5/E6 (E7/E8). Selectable reserve power to the Bus is provided from 120 VAC 1E5(2E7) or 1E6(2E8), and is normally selected to Division I. In the event that either RPS M-G Set fails to operate, the alternate power source must be manually selected.
Two EPAs in series are installed downstream of the generator output breaker for each Motor Generator Set and the alternate power supply for the RPS buses. Bus A is protected by EPA-1 and -2; Bus B by EPA-3 and -4. Alternate power is protected by EPA-5 and -6

Distractor Analysis:
Choice A: Plausible because A MG set is lost along with EPA breakers 1 & 2, but these are not the only EPA breakers to trip.

Choice B: Plausible if the examinee picks the wrong power supply and EPA breakers 3 & 4 are powered from RPS MG Set B.

Choice C: Correct answer, see explanation

Choice D: Plausible if the examinee picks the wrong power supply and EPA breakers 3 & 4 are powered from RPS MG Set B.

Notes

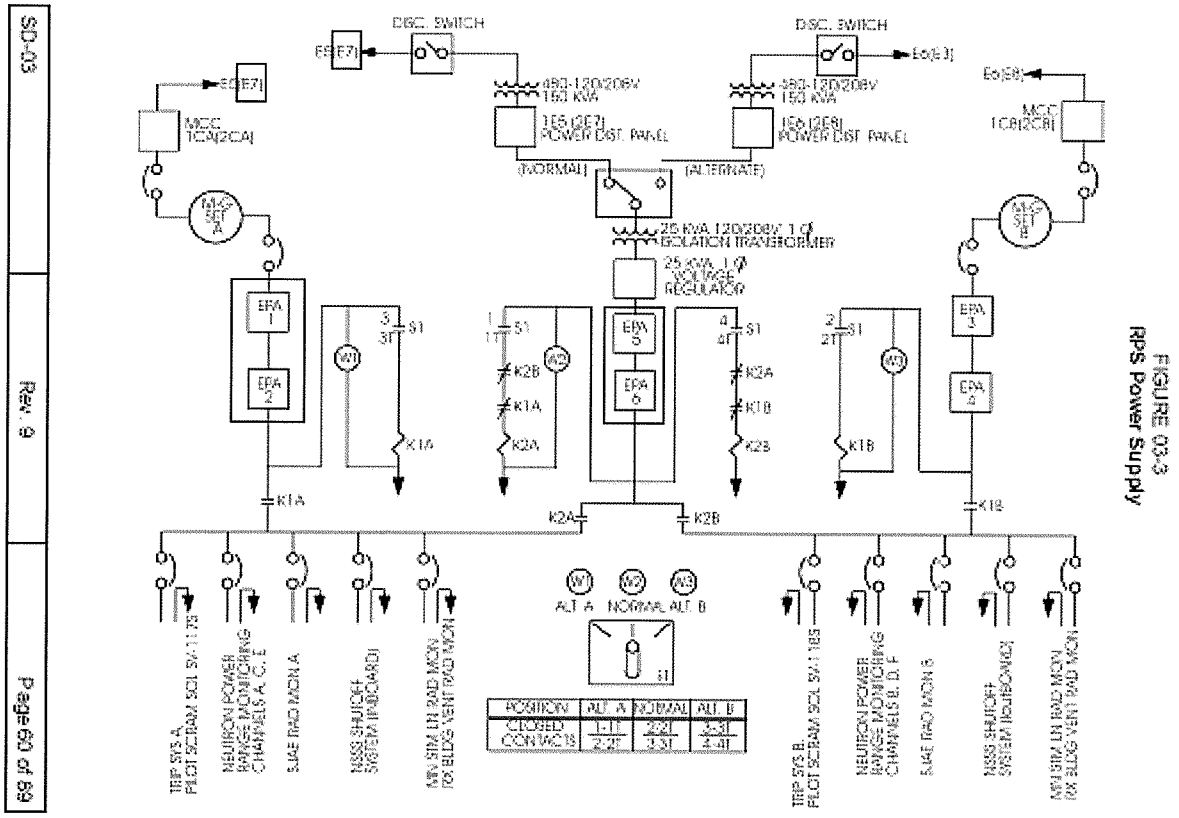

FIGURE 03-3
RPS Power Supply

Categories

K/A:	212000 K2.01	Tier / Group:	T2G1
RO Rating:	3.2	SRO Rating:	3.3
LP Obj:	03-18A	Source:	BANK
Cog Level:	LOW	Category 8:	Y

11. A control rod is notched out from position 12. The operator observes the 12 indication on the four rod display go out, come back on, and then go out again.

The operator then observes the 13 indication come on then go out. No additional rod position is displayed on the four rod display.

Which one of the following identifies the rod position that will be displayed on the RWM? (assume no additional operator action)

A. Position 12 in inverse video.

B. FF with no inferred position.

C. Position 14 in inverse video.

D.✓ FF with an inferred position of 14.

Feedback

K/A: 214000 A3.04
Ability to monitor automatic operations of the ROD POSITION INFORMATION SYSTEM including:
RCIS: Plant-Specific
(CFR: 41.7 / 45.7)

RO/SRO Rating: 3.5/3.8

Objective: CLS-LP-07.1 Obj. 8
Explain how control rod position is inferred and substituted in the RWM

Reference: SD-07.1

Cog Level: low

Explanation: For Brunswick the rod contol system is RWM which supplies rod blocks and such and indications of the selected rod and position of that rod.
On a rod withdrawal if the even notch position (in this case 14) is failed, As long as RWM detects the previous odd reed switch (13) RWM will provide an inferred position of 14 since RWM also receives data from RMCS that the operator initiated a withdraw motion. If there is an inferred position available, it will not be automatically substituted into RWM. A substitute rod position will be displayed on RWM in inverse video.

Distractor Analysis:
Choice A is incorrect since 12 will not be displayed but is plausible since position 12 was the last good even position sensed by RWM

Choice B is incorrect since position 13 was detected but is plausible since no inferred position would be available if 13 failed or if no rod motion command was sensed by RWM and the last sensed reed switch was odd

Choice C is incorrect since RWM will not automatically substitute inferred position but plausible since the rod is actually at 14, and this would be the display once the operator accepts the inferred position

Choice D is correct, see explanation

2. **"Operator-Driven Rod Motion" Case**

Operator-driven rod motion can result in an unknown rod position ("FF" on the RWM screen) from either an electrical/reed switch failure or an interruption of the timer. Only the first of these need be addressed as the second condition results in only an intermittent unknown position indication. In the presence of rod motion the RWM will offer an inferred position based on the following rules:

RWM will recall the last known position, and

- If odd, on an insert motion, offer the next more inserted even notch.
- If odd, on a withdraw motion, offer the next more withdrawn even notch.
- If even, regardless of direction of motion, offer no inferred position.

Categories

K/A:	214000 A3.04	Tier / Group:	T2G2
RO Rating:	3.5	SRO Rating:	3.8
LP Obj:	7.1-8	Source:	BANK
Cog Level:	LOW	Category 8:	Y

12. A plant startup is in progress when a low voltage on the high voltage power supply for IRM G occurs. All IRMs are on range 1.

Which one of the following identifies the impact of this condition and the action required to clear the alarm(s)?

The expected plant response is a ____(1)____ and the action required to clear the cause of the alarm(s) is placing the ____(2)____.

A. (1) rod block only
(2) joystick on P603 for IRM G to Bypass

B. (1) rod block only
(2) operate switch on the IRM G drawer to STANDBY

C. (1) rod block with a half scram
(2) joystick on P603 for IRM G to Bypass

D. (1) rod block with a half scram
(2) operate switch on the IRM G drawer to STANDBY

Feedback

K/A: 215003 A2.02
Ability to (a) predict the impacts of the following on the INTERMEDIATE RANGE MONITOR (IRM) SYSTEM; and (b) based on those predictions, use procedures to correct, control, or mitigate the consequences of those abnormal conditions or operations:
IRM inop condition
(CFR: 41.5 / 45.6)

RO/SRO Rating: 3.5/3.7

Objective: CLS-LP-09.1 Obj. 13c
Given plant conditions and one of the following events, use plant procedures to determine the actions required to control and/or mitigate the consequences of the event:
c. IRM Inop alarm

Reference: 1APP-A-05, SD-9.1

Cog Level; High

Explanation: A loss of power to the high voltage supply is an Inop trip of the IRM. In order to clear the cause of this alarm per the annunciator procedure would be to place the IRM in bypass using the joystick on the P603 panel. The question can not state IAW the procedure because that would give the answer to the first part of the question.

Distractor Analysis:
Choice A: Plausible because the actions are correct and rod block will occur, but also a half scram will occur.

Choice B: Plausible becasue a rod block will occur and some components placing it in standby will remove the signal from the trip circuit (i.e. standby gas in standby removes the train from the logic).

Choice C: Correct answer, see explanation

Choice D: Plausible becasue these will occur and some components placing it in standby will remove the signal from the trip circuit (i.e. standby gas in standby removes the train from the logic).

Notes

IRM A UPSCALE/INOP

AUTO ACTIONS

1. Rod withdrawal block (bypassed when reactor mode switch is in RUN).
2. Reactor half-Scram (bypassed when reactor mode switch is in RUN).

CAUSE

1. IRM Channel(s) A, C, E, or G indicating greater than or equal to 117 on the 0-125 scale.
2. IRM Channel(s) A, C, E, or G inoperative signals:
   a. IRM drawer selector switch not in operate.
   b. IRM drawer module unplugged.
   c. IRM detector high voltage power supply low voltage.
3. IRM A, C, E, or G detector failure.
4. Improper ranging of IRM A, C, E, or G range switches during reactor startup or shutdown.
5. Circuit malfunction.

ACTIONS (Continued)

5. If the alarm still exists and one channel is affected, perform the following:

   a. Refer to Tech Specs and TRM for IRM channel operability requirements.
   b. Notify the Unit SCO.
   c. Bypass the affected channel using the IRM bypass switch.
   d. Reset the reactor half-Scram signal.
6. If IRM detector failure or circuit malfunction is suspected, ensure that a W/R is prepared.

NEUTRON MON SYS TRIP

AUTO ACTIONS

1. If alarm is initiated by IRMs and both RPS trip systems are affected, a reactor Scram will occur.
2. If alarm is initiated by IRMs and only one RPS trip system is affected, a reactor half-Scram will occur.
3. If alarm is initiated by APRMs or OPRMs, then a reactor Scram will occur.

CAUSE

1. Any IRM channel upscale/inop trip (bypassed when the reactor mode switch is in RUN).
2. A combination of any two unbypassed APRMs with an upscale or inop trip.
3. A combination of any two unbypassed OPRM channels tripped.
4. Any voter power supply failure.

TABLE 09.1- 1 (Cont'd)
INSTRUMENT AND CONTROL SETPOINTS
STARTUP RANGE NEUTRON MONITORING SYSTEM

INSTRUMENT DESIGNATION AND TRIP FUNCTION	TRIP SETPOINT	FUNCTION, ADDITIONAL CONDITIONS AND COMMENTS
IRM Inop Trip C51-IRM-K601 (A-H) [TS & TRM] C72-K14 (A-H) [TS] Annunciator "IRM A(B) UPSCALE/INOP" (A-05 3-4 & 4-4)	• 60 ± 10 Vdc • Switch not in OPERATE • IRM module unplugged	**Initiates a rod block and half scram if the following conditions are met:** •Reactor MODE SWITCH is <u>not</u> in RUN •Associated IRM is <u>not</u> bypassed
IRM Downscale C51-IRM-K601 (A-H) [TRM] Annunciator "IRM A(B) DOWNSCALE" (A-05 1-4)	5/125 ± 1.5	**Initiates a rod block if the following conditions are met:** •Reactor MODE SWITCH is <u>not</u> in RUN •Associated IRM is <u>not</u> bypassed •Above Range 1
IRM Upscale Alarm C51-IRM-K601 (A-H) [TRM] Annunciator "IRM A(B) UPSCALE" (A-05 2-4)	70/125 ± 2.5	**Initiates a rod block if the following conditions are met:** •Reactor MODE SWITCH is <u>not</u> in RUN •Associated IRM is <u>not</u> bypassed
IRM UpscaleTrip C51-IRM-K601 (A-H [TS & TRM] C72-K14 (A-H) [TS] Annunciator "IRM A(B) UPSCALE/INOP" (A-05 3-4 & 4-4)	117/125 ± 2.5	**Initiates a rod block and half scram if the following conditions are met:** •Reactor MODE SWITCH is <u>not</u> in RUN •Associated IRM is <u>not</u> bypassed
Detector Not Full In C51-IRM-K601 (A-H) [TS]	N/A	**Initiates a rod block if the following conditions are met:** •Reactor MODE SWITCH is <u>not</u> in RUN •IRM detector <u>not</u> full in <u>Note</u>: Interlock does not prevent detector movement

[TS] Technical Specification related [TRM] Technical Requirement Manual related

NOTE: With the shorting links removed, any single SRM Upscale Trip, or IRM Upscale or INOP signal will cause a full scram.

Categories

K/A:	215003 A2.02	Tier / Group:	T2G1
RO Rating:	3.5	SRO Rating:	3.7
LP Obj:	9.1-13C	Source:	NEW
Cog Level:	HIGH	Category 8:	Y

13. A plant startup is in progress. A control rod block has occurred. The following nuclear instrument indications are noted:

SRM	Counts	Position
A	$3x10^5$	Full In
B	190	Mid Position
C	$6x10^4$	Full In
D	125	Mid Position

IRM	Counts	Range
A	25/125	3
B	65/125	2
C	35/125	3
D	15/125	3
E	12/125	2
F	55/125	2
G	30/125	3
H	25/125	3

Which one of the following is the minimum action that is required to clear the *ROD OUT BLOCK*?

A. Withdrawing SRM A only.

B. Ranging IRM E to range 3.

C. Withdrawing SRM A and C.

D. Ranging IRM B and F to range 3.

Feedback

K/A: 215004 K5.03
Knowledge of the operational implications of the following concepts as they apply to SOURCE RANGE MONITOR (SRM) SYSTEM:
Changing detector position
(CFR: 41.5 / 45.3)

RO/SRO Rating: 2.8/2.8

Objective: CLS-LP-09.1 Obj. 9a
Describe the insertion/withdrawal of the SRM detectors, including the following:
b. Reason for maintaing counts between 125 and $2x10^5$.

Reference: SD-09.1

Cog Level: high

Explanation:
To clear the rod block SRM must be below $2x10^5$ or IRMs must be > range 7. The retract permit is bypassed with IRMs $\geq$ range 3. Withdrawing SRM A will cause the rod block to clear when less than $2x10^5$.

Distractor Analysis:
Choice A: Correct answer, see explanation

Choice B: Plausible because IRM E is the only Div I IRM below range 3. If all Div I IRMs are above range 3 then the rod block from SRM Retract Permissive in would be bypassed, not the signal from SRM upscale. Also ranging IRM E to range 3 will cause a IRM downscale which is a rod block.

Choice C: Plausible because SRM A does need to be withdrawn and C is above the old setpoint for the upscale alarm. (recent change, old setpoint was $5x10^4$).

Choice D: Plausible because IRM B & D are the only Div II IRMs below range 3 and these do meet the requirements for ranging them to 3. If all Div II IRMs are above range 3 then a rod block from SRM Retract Permissive would be bypassed, not the signal from SRM upscale.

Notes

TABLE 09.1- 1
INSTRUMENT AND CONTROL SETPOINTS
STARTUP RANGE NEUTRON MONITORING SYSTEM

INSTRUMENT DESIGNATION AND TRIP FUNCTION	TRIP SETPOINT AND FUNCTION	FUNCTION, ADDITIONAL CONDITIONS AND COMMENTS
SRM Inop Trip C51-SRM-K600 (A-D) TRM Annunciator "SRM UPSCALE/INOP" (A-05 2-3)	HVPSS - 10% ± 1%* Switch not in OPERATE or SRM Module unplugged	Initiates a **rod block** if the following conditions are met: •Reactor MODE SWITCH is not in RUN •ANY divisional IRM < Range 8 and NOT bypassed. Note: Bypassed if all divisional IRMs are above Range 7
SRM Downscale Trip C51-SRM-K600 (A-D) TRM Annunciator "SRM DOWNSCALE" (A-05 1-3)	5 ± 1.5 cps	Initiates a **rod block** if the following conditions are met: •Reactor MODE SWITCH is not in RUN •ANY divisional IRM < Range 3 and NOT bypassed. Note: Bypassed if all divisional IRMs are above Range 2
SRM Retract Permissive C51-SRM-K600 (A-D) TRM Annunciator "SRM RETRACT NOT PERMITTED" (A-05 4-3)	125 cps (101 to 150)	Initiates a **rod block** if the following conditions are met: •SRM detector not FULL IN •ANY divisional IRM < Range 3 and NOT bypassed. Note: Bypassed if all divisional IRMs are above Range 2
SRM Upscale Alarm C51-SRM-K600 (A-D) TRM Annunciator "SRM UPSCALE/INOP" (A-05 2-3)	2×10^5 cps ($1.3 \times 10^5 - 3.0 \times 10^5$)	Initiates a **rod block** if the following conditions are met: •Reactor MODE SWITCH is not in RUN •ANY divisional IRM < Range 8 and NOT bypassed. Note: Bypassed if all divisional IRMs are above Range 7
SRM Upscale Trip C51-SRM-K600 (A-D) TRM	5×10^5 cps ($3.3 \times 10^5 - 7.5 \times 10^5$)	**Full Scram** if refueling shorting links removed
SRM Period C51-SRM-K600 (A-D) TRM	50 seconds -10, +16 sec	Annunciator "SRM PERIOD" (A-05 3-3)

TRM Technical Requirement Manual (TRM) related (SRM Instrumentation is Technical Specification related however trips listed are in the TRM)

* HVPSS is the high voltage power supply setting (350-600 Vdc range) and the percentages are of this value. Note: A complete loss of power will produce an apparent trip of all trip units (i.e. Full scram if shorting links are removed due to SRM Upscale Trip)

Categories

K/A:	215004 K5.03	Tier / Group:	T2G1
RO Rating:	2.8	SRO Rating:	2.8
LP Obj:	9.1-9A	Source:	NEW
Cog Level:	HIGH	Category 8:	Y

14. Which one of the following identifies the impact a loss of RPS MG Set B will have on the Unit One Power Range Neutron Monitoring system and identifies the action required to energize RPS B from its alternate power supply?

A half scram will occur with ____(1)____ 2 and 4 losing power and by placing the RPS Power Source Select Switch on Panel P610 in the ____(2)____ position will re-energize RPS B IAW 1OP-03, Reactor Protection System Operating Procedure.

A. (1) APRMs
   (2) ALT A

B. (1) APRMs
   (2) ALT B

C. (1) Voters
   (2) ALT A

D. (1) Voters
   (2) ALT B

Feedback

K/A: 215005 A2.04
Ability to (a) predict the impacts of the following on the AVERAGE POWER RANGE MONITOR/ LOCAL POWER RANGE MONITOR SYSTEM; and (b) based on those predictions, use procedures to correct, control, or mitigate the consequences of those abnormal conditions or operations:
SCRAM trip signals
(CFR: 41.5 / 45.6)

RO/SRO Rating: 3.8/3.9

Objective: LOI-CLS-LP-09.6 Obj. 12b
Given plant conditions, predict the response of the PRNMS to a malfunction/failure of the following systems/components:
b. 120 VAC Distribution

Reference: SD-09.6

Cog Level: High

Explanation:
Each APRM instrument receives power from two power supplies, LVPS 1 and LVPS 4. LVPS 1 is fed from RPS Bus A while LVPS 4 is fed from RPS Bus B. Therefore, a loss of an RPS Bus will not affect operation of the APRM NUMACS. Each of the four VOTERS corresponds to a channel of the A1, A2, B1, and B2 RPS logic. The VOTER outputs to the RPS logic are: A1 (VOTER 1), A2 (VOTER 3), B1 (VOTER 2), and B2 (VOTER 4). Voters 2 and 4 are powered from RPS B. OP-03 contains the steps to re-energize the RPS MG Set in which transferring to alternate power supply can be performed. If this is done then the switch will be placed in Alt B position. Some confusion usually happens as this procedure is performed because the light above the Alt B position is unlit. Students usually think then that Alt B has no power available to energize the RPS Bus and want to take the switch to Alt A which is the energized bus.

Distractor Analysis:
Choice A: Plausible because the APRM lose one power source but have a redundent power supply. The procedure action is plausible because the ALT A is a position switch that is used for transferring the A RPS to alternate. The student may confuse this with transferring to the A RPS power supply because the light will be extinguished above the Alt B position and be on above the Alt A position.

Choice B: Plausible becasue the APRM lose one power source but have a redundent power supply. Alt B is the correct switch powition for the transfer switch.

Choice C: Plausible because the RPS system is the 120 VAC emergency power. The procedure action is plausible because the ALT A is a position switch that is used for transferring the A RPS to alternate. The student may confuse this with transferring to the A RPS power supply because the light will be extinguished above the Alt B position and be on above the Alt A position.

Choice D: Correct answer, see explanation.

Notes

2.8.8 PRNMS Power Supplies

The Power Range Neutron monitoring System uses one Quadruple Voltage Power Supply (QLVPS) chassis and four Dual Low Voltage Power Supplies (DLVPS), one for each bay of the PRNMS panel, to provide redundant power to the NUMAC instruments. These LVPS convert 120 VAC to low voltage DC. See Figure 09.6-15.

Each APRM instrument receives power from two power supplies, LVPS 1 and LVPS 4. LVPS 1 is fed from RPS Bus A while LVPS 4 is fed from RPS Bus B. Therefore, a loss of an RPS Bus will not affect operation of the APRM NUMACS. Each RBM instrument also

SD-09.6	Rev. 5	Page 31 of 93

1.3.6 Two-Out-of-Four Logic System (VOTERS)

The VOTERS serve as the interface between the APRM/OPRM channels, which generate safety trips, and the RPS. Each of the four VOTERS corresponds to a channel of the A1, A2, B1, and B2 RPS logic. The VOTER outputs to the RPS logic are: A1 (VOTER 1), A2 (VOTER 3), B1 (VOTER 2), and B2 (VOTER 4). VOTERS cannot be bypassed.

The VOTER logic does not latch a trip condition. This means no reset is required and no input trip signal occurs if one APRM instrument generates a trip input and then clears before a second APRM generates a trip input. A trip output occurs only if two or more inputs indicate a trip concurrently.

SD-09.6	Rev. 5	Page 10 of 93

From 1OP-03:

CAUTION

Transferring RPS Bus B to alternate power following a loss of power on RPS Bus B shall always be accomplished by placing the *RPS POWER SOURCE SELECT SWITCH* in *ALT B*. A Scram will result if the switch is placed in *ALT A*.

5. **PLACE** the *RPS POWER SOURCE SELECT SWITCH* on Panel H12-P610 in *ALT B*. _____

Categories

K/A:	215005 A2.04	Tier / Group:	T2G1
RO Rating:	3.8	SRO Rating:	3.9
LP Obj:	9.6-12B	Source:	NEW
Cog Level:	HIGH	Category 8:	Y

FIGURE 09.6-13

VOTER/RPS Interface Diagram (All VOTERS)

OPRM CDA/INOP TRIP OUTPUTS TO RPS ARE DEFEATED. REACTOR SCRAM ON 2-OF-4 OPRM CDA/INOP TRIPS WLL NOT OCCUR

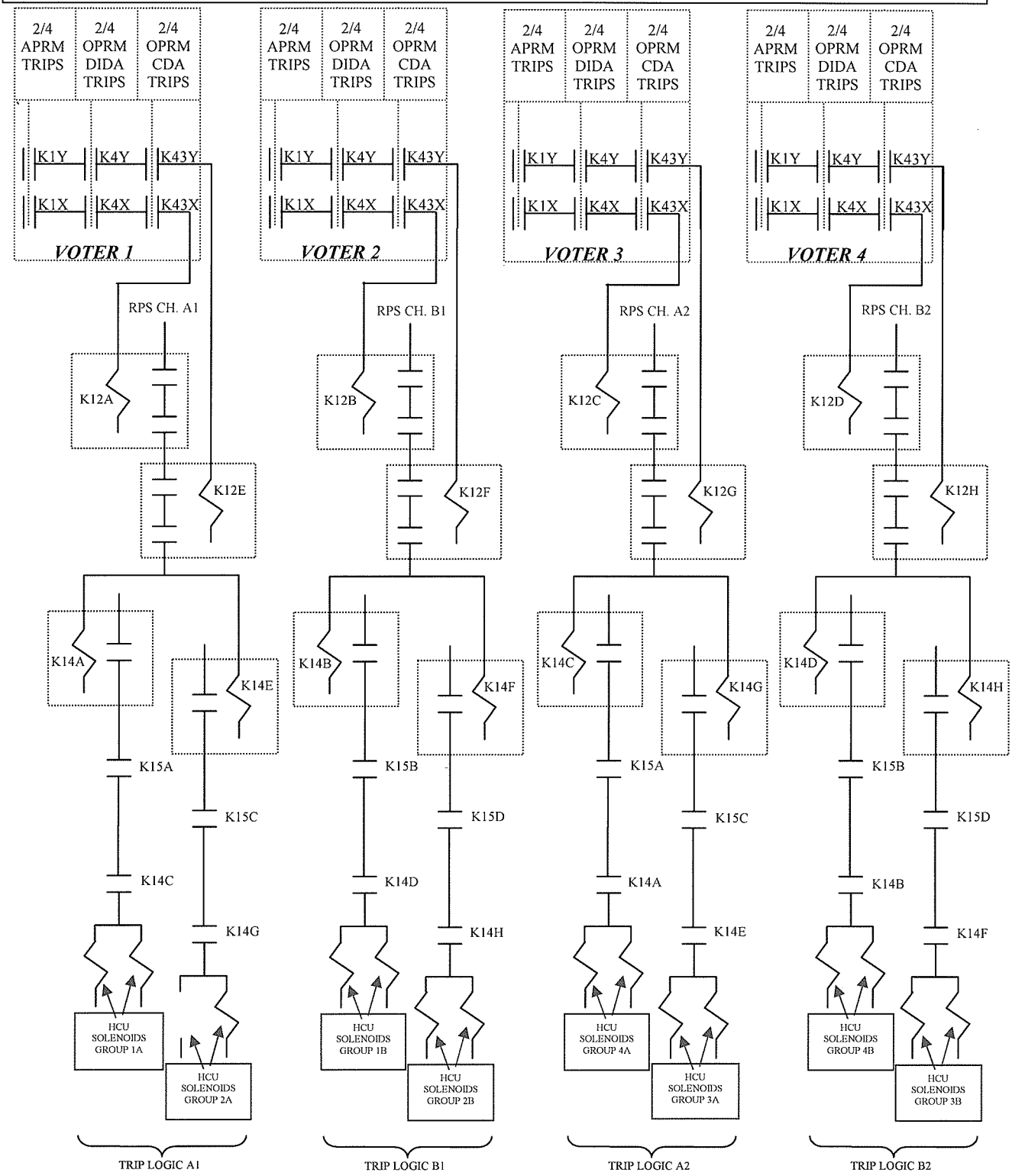

FIGURE 09.6-14
VOTER/RPS Interface Diagram (VOTERS 1 and 3)

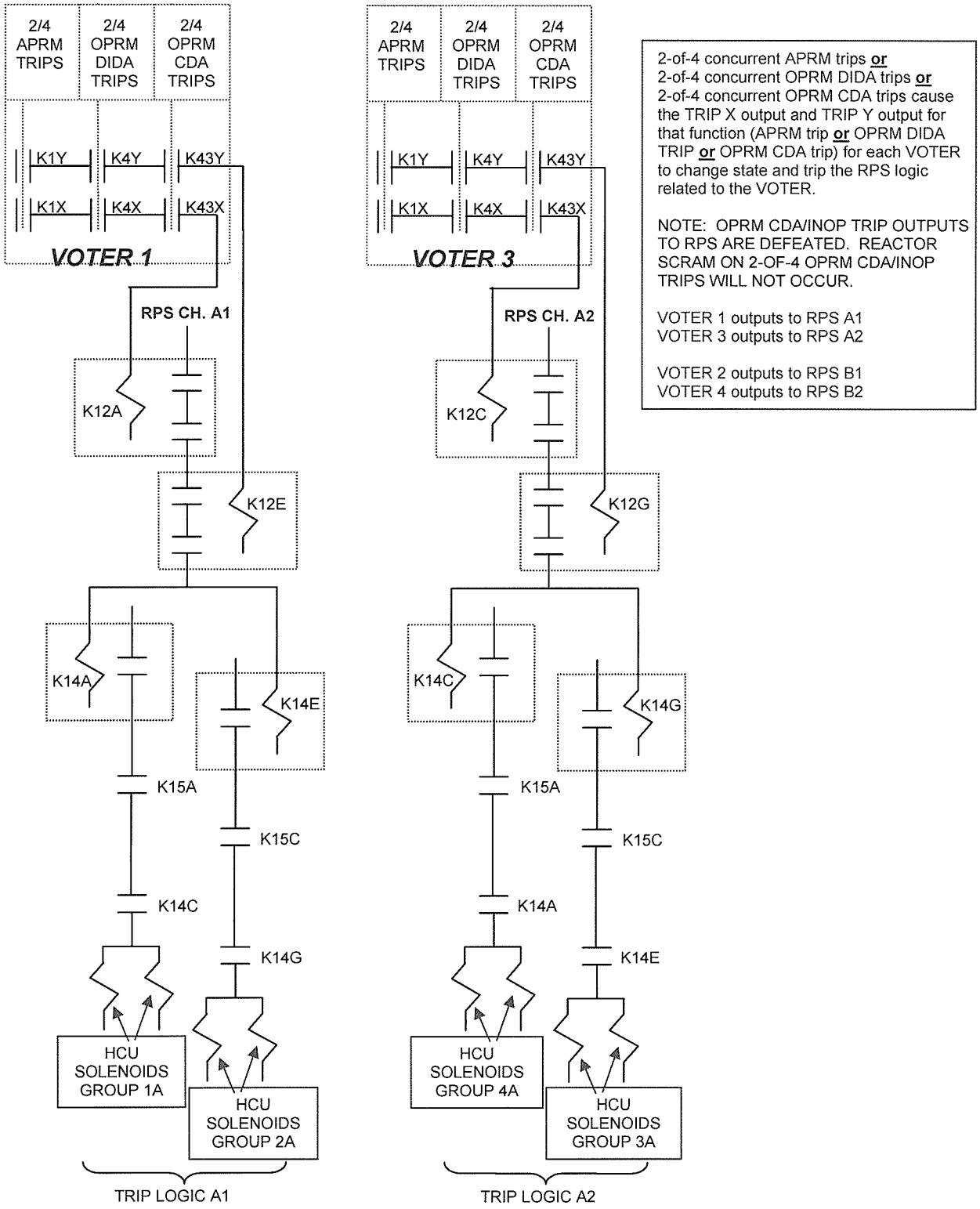

2-of-4 concurrent APRM trips **or**
2-of-4 concurrent OPRM DIDA trips **or**
2-of-4 concurrent OPRM CDA trips cause the TRIP X output and TRIP Y output for that function (APRM trip **or** OPRM DIDA TRIP **or** OPRM CDA trip) for each VOTER to change state and trip the RPS logic related to the VOTER.

NOTE: OPRM CDA/INOP TRIP OUTPUTS TO RPS ARE DEFEATED. REACTOR SCRAM ON 2-OF-4 OPRM CDA/INOP TRIPS WILL NOT OCCUR.

VOTER 1 outputs to RPS A1
VOTER 3 outputs to RPS A2

VOTER 2 outputs to RPS B1
VOTER 4 outputs to RPS B2

FIGURE 09.6-15

PRNMS Power Supplies

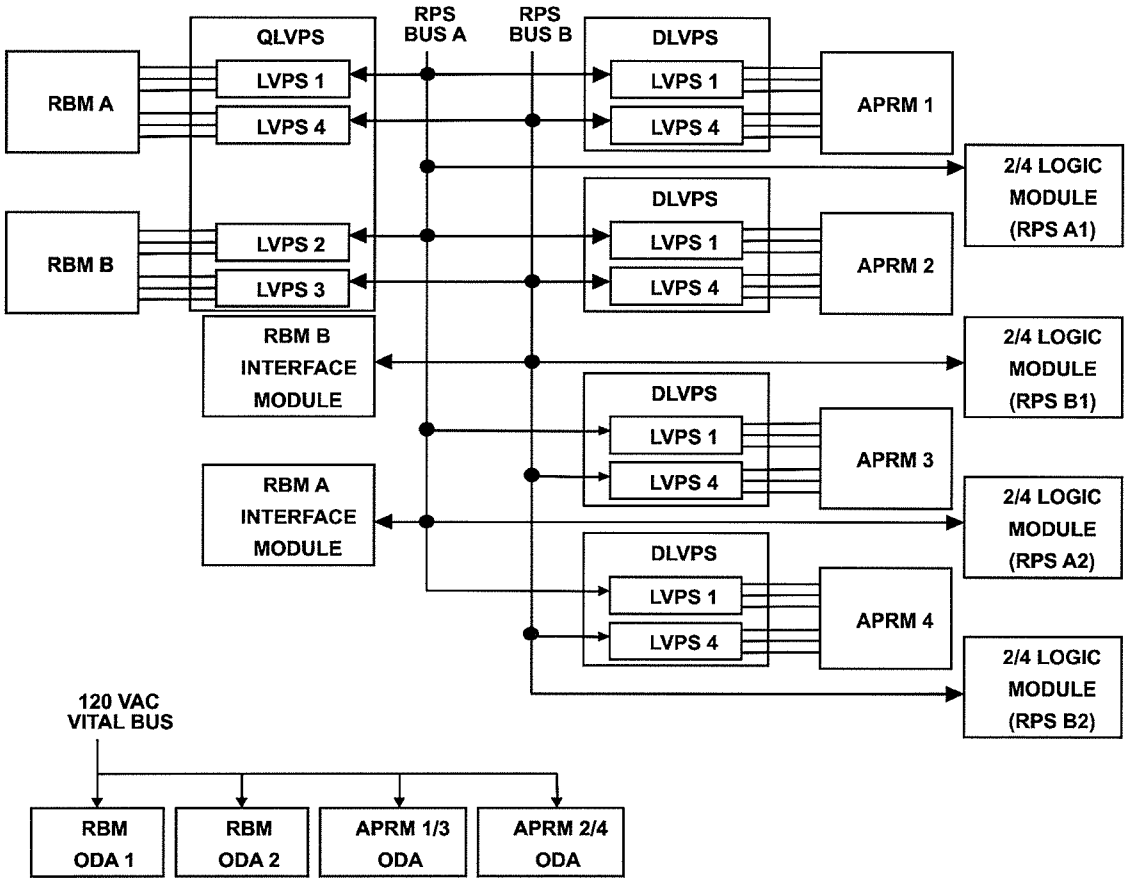

FIGURE 09.6-16
Panel P603 Layout

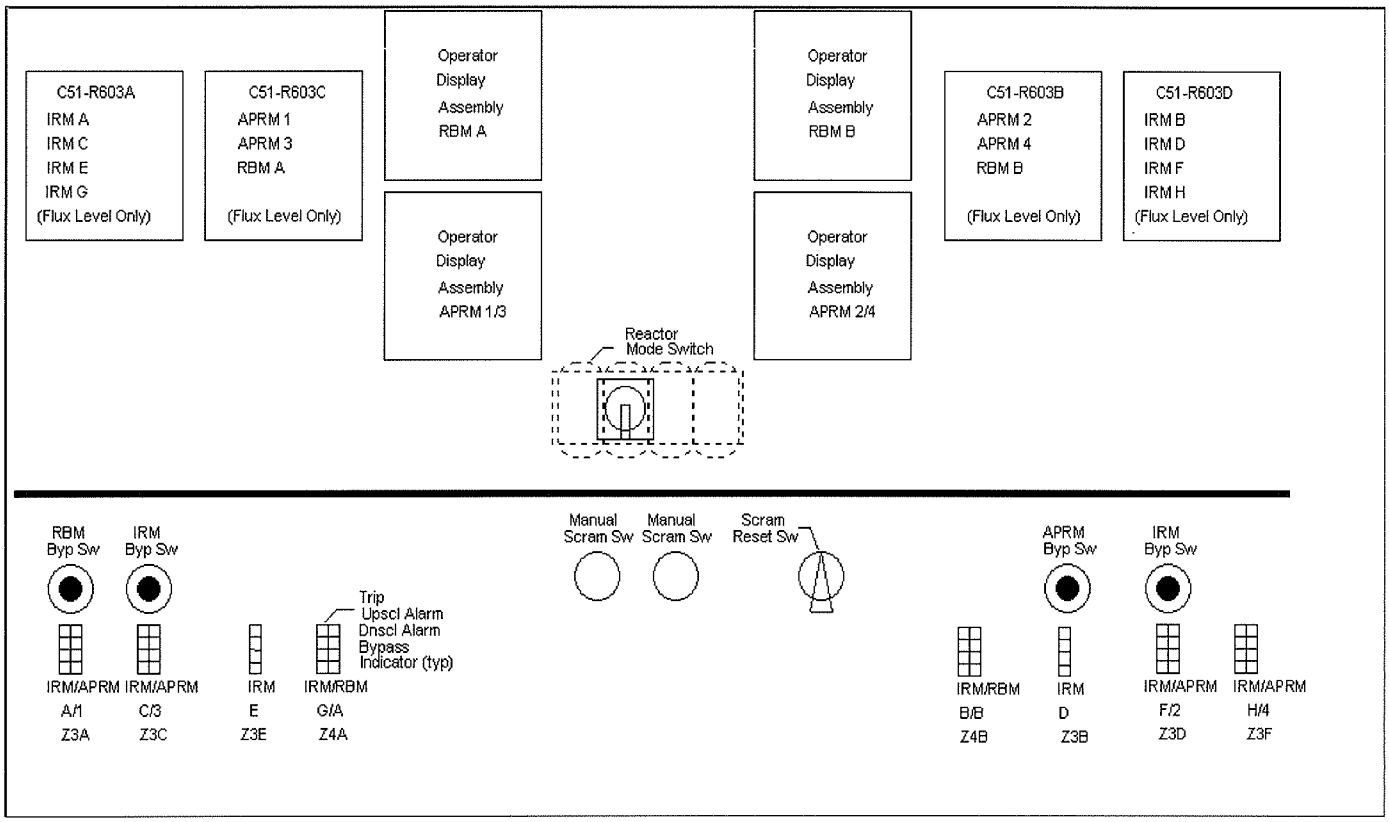

FIGURE 9.6-22a
OPRM Stability Screen – DSS-CD

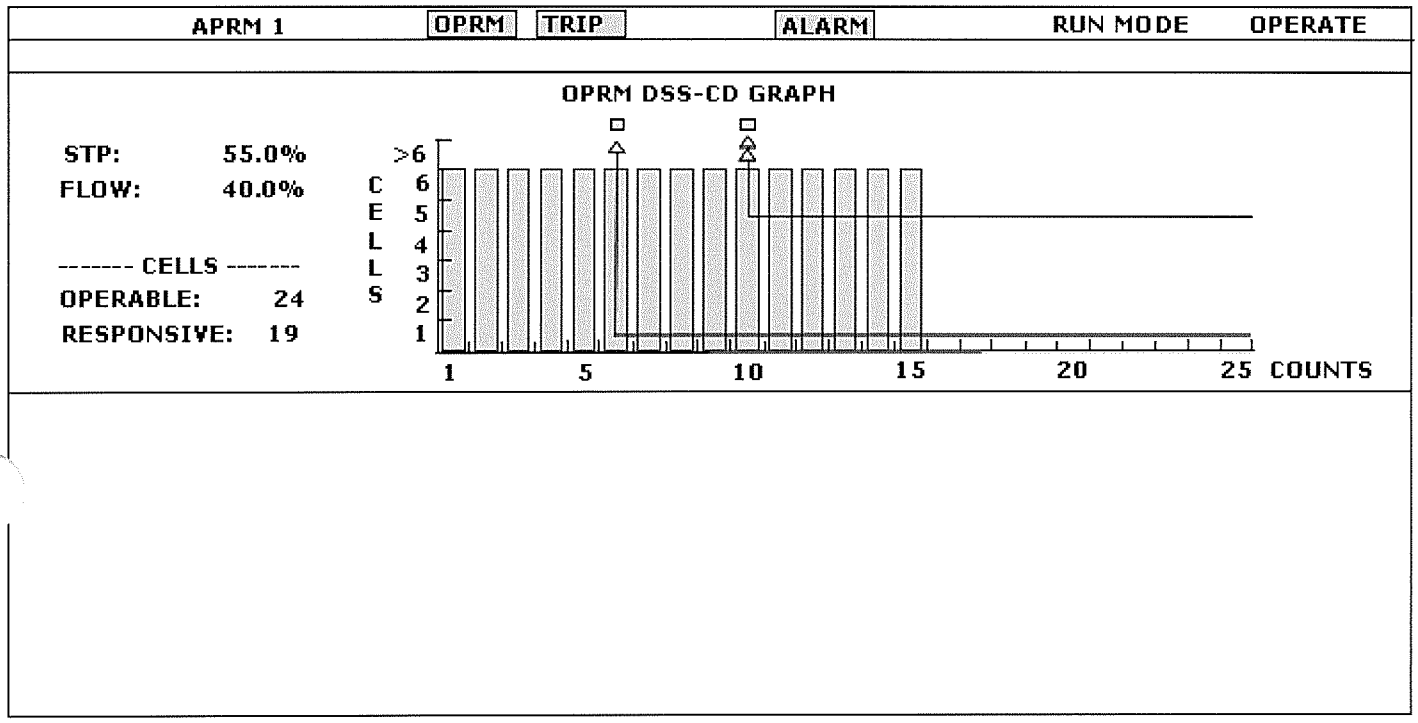

15. Unit One is at 94% power when one recirc flow input to APRM 2 fails downscale (zero).

Which one of the following identifies:
(1) the OPRM response to the recirc flow failure and
(2) the required action IAW the annunciator procedures?

A. (1) OPRM 2 only is enabled.
(2) Bypass APRM 2.

B. (1) OPRM 2 only is enabled.
(2) Verify RBM B auto transfers to APRM 1.

C. (1) All OPRMs are enabled.
(2) Bypass APRM 2.

D. (1) All OPRMs are enabled.
(2) Verify RBM B auto transfers to APRM 1.

Feedback

K/A: 215005 A2.05
Ability to (a) predict the impacts of the following on the AVERAGE POWER RANGE MONITOR/ LOCAL POWER RANGE MONITOR SYSTEM ; and (b) based on those predictions, use procedures to correct, control, or mitigate the consequences of those abnormal conditions or operations:
Loss of recirculation flow signal
(CFR: 41.5 / 45.6)

RO/SRO Rating: 3.5/3.6

Objective: LOI-CLS-LP-09.6 Obj 12g
Given plant conditions, predict the response of the PRNMS to a malfunction/failure of the following systems/components:
e. Recirc Flow Module

Reference: SD-9.6, 1APP-A-06

Cog Level: High

Explanation:
Each Numac processes the signals from one sensor in Loop A and one in Loop B and averages the signals to obtain total recirc flow rate. If one of the two recirc flow signals to an APRM failed to a zero signal with reactor power at 100%, its OPRM becomes enabled because the calculated flow is reduced to one half of its initial value. The other APRM/OPRMs will be unaffected. The RBM has a primary reference from APRM 2 with the primary alternate from APRM 4 and a secondary alternate from APRM 3. APRM 1 is the primary reference for RBM A.

Distractor Analysis:
Choice A: Correct answer, see explanation

Choice B: Plausible because the RBM B will transfer from APRM 2 to its alternate reference which is APRM 4 or its secondary alternate of APRM 3. Prior to the Numacs the transfer of the flow units was a manual transfer. APRM 1 is not used for RBM B but is the primary for RBM A.

Choice C: Plausible because the alarm for OPRM enabled will be in alarm, and the Voters will see the OPRM enabled on all 4 voters for only OPRM 2 though.

Choice D: Plausible because the alarm for OPRM enabled will be in alarm, and the Voters will see the OPRM enabled on all 4 voters for only OPRM 2 though. The RBM B will transfer from APRM 2 to its alternate reference which is APRM 4 or its secondary alternate of APRM 3. Prior to the Numacs the transfer of the flow units was a manual transfer. APRM 1 is not used for RBM B but is the primary for RBM A.

Notes

4.2.3 Recirculation Flow Transmitters

Failed Recirc Flow transmitters could result in control rod blocks or trip signals to be generated by the associated APRM, depending on the direction of failure and the initial reactor power level. For example, if one of the two recirc flow signals to an APRM failed to a zero signal with reactor power at 100%, its OPRM becomes enabled because the calculated flow is reduced to one half of its initial value, and its STP rod block and trip set point will be exceeded because the flow used to calculate the STP rod block and trip set points is also reduced to one half of its initial value. The other APRM channels are not affected since they use separate recirc flow signals.

Since the APRM 4 instrument provides Loop A and Loop B Flow signals for meters, if either of its flow inputs fail to zero the associated meter will indicate zero. Since the APRM 1 instrument provides Loop A and Loop B flow signals for the flow recorder, if either of its flow inputs fail to zero the associated recorder pen will indicate zero.

Recirc Flow Module failures can be bypassed using the APRM bypass switch. This method, however, will bypass all functions associated with the affected APRM channel.

Flow signals and flow upscale alarm signals are bypassed when the corresponding APRM channel is bypassed. The RBM disregards flow signals from a bypassed APRM when processing flow compare logic.

Each RBM channel designates a hierarchy of normal and alternate APRM channels to use as their reference APRM channel. The alternate channels are used in hierarchical order when the preferred channels are not available. The primary reference APRM for RBM A is APRM 1 with the first alternate as APRM 3 and the second alternate as APRM 4. The primary reference APRM for RBM B is APRM 2 with the first alternate as APRM 4 and the second alternate as APRM 3. The RBM circuitry will automatically transfer to an alternate APRM on failure of the primary reference APRM (Critical Self Test Fault). No operator action is required for this transfer.

	RBM Channel A	RBM Channel B
Primary Reference	APRM 1	APRM 2
First Alternate	APRM 3	APRM 4
Second Alternate	APRM 4	APRM 3

ACTIONS

1. If observations of FLOW (%) on APRM BARGRAPH displays at APRM ODAs, and FLOW COMPARE alarm indications on RBM ODA headers do not identify cause of the alarm, then perform the following:
   a. On the APRM ODAs, press ETC soft key to obtain TRIP STATUS soft key.
   b. Press TRIP STATUS soft key.
   c. Check FLOW UPSCALE ALARM status from the TRIP STATUS display.
   d. On RBM ODAs, press ETC soft key to obtain TRIP STATUS soft key.
   e. Press TRIP STATUS soft key.
   f. Check RECIRCULATION FLOW COMPARE status from TRIP STATUS display.
2. When the failed channel can be identified, then perform the following:
   a. Notify the Unit SCO.
   b. Bypass the affected APRM
   c. Confirm the FLOW REF OFF NORMAL annunciator clears.
3. If an APRM Upscale trip condition was initiated to the Voters, then press TRIP MEMORY RESET at each Voter.

Categories

K/A:	215005 A2.05	Tier / Group:	T2G1
RO Rating:	3.5	SRO Rating:	3.6
LP Obj:	9.6-12G	Source:	NEW
Cog Level:	HIGH	Category 8:	Y

16. Which one of the following identifies the power supply to the Unit One RPS A analog trip cabinets?

A. 120 VAC Panel 31AB

B. 120 VAC Panel 32AB

C. 125 VDC 11A

D. 125 VDC 12A

Feedback

K/A: 216000 K2.01
Knowledge of electrical power supplies to the following:
Analog trip system: Plant-Specific
(CFR: 41.7)

RO/SRO Rating: 2.8/2.8

Objective: CLS-LP-03 Obj 18h
State the power supplies for the following:
h. Analog Trip System Logic Cabinets

Reference: SD-03

Cog Level: Low

Explanation:
There are four cabinets for the RPS, each housing a separate channel (XU-65 through XU-68). Cabinets receive power from DC panels 11A(B) for Unit 1 and DC panels 12A(B) for unit 2. An NLI /Topaz (backup) inverter and a Lambda power supply are located in each cabinet. In order to meet the complete redundancy criteria, the power supplies are designed to be shared in the event of a power supply failure in one cabinet. These four cabinets cause a trip on a loss of power. 31AB(32AB) feed trip logic for PCIS group 6 isolation and also trip (cause) a group 6 isolation on a loss of power.

Distractor Analysis:
Choice A: Plausible because there are 120 VAC (UPS) power supplies to trip systems in which this feeds PCIS Group 6 isolation tip logic.

Choice B: Plausible because there are 120 VAC (UPS) power supplies to trip systems in which this feeds PCIS Group 6 isolation tip logic.

Choice C: Correct answer, see explanation

Choice D: Plausible because This is the feed to Unit two analog trip system cabinets.

Notes

Load: 120V Distribution Panel 1-31AB (HC7)
Location: Control Building 49' NW
Drawing Reference: LL-93041-25
Upstream Power Source: **120V Emergency Distribution Panel 1E5 (Normal)**
120V Emergency Distribution Panel 1E6 (Alternate)

CKT	LOAD DESCRIPTION	EFFECTS ON LOSS OF POWER
1	CAC System Inboard LOCA Signal Trip Logic (XU-53, H12-P606, P622) (TS 3.3.6.1, 3.3.6.2, 3.3.3.1, 3.4.4, 3.4.5, 3.6.1.3, TRM 3.4, ODCM 7.3.2)	**Group 6 Div I AC-powered CAC valves will close** (CAC-V172, V5, V6, V7, V162, V163, V9), **all Group 6 CAM, RIP and RXS valves will close**
2	CAC System Division 1 (AC) Isolation Trip Override Switch, CAC-CS-4178 and Stack Rad Monitor Isolation Override Switch CAC-CS-5519 (TS 3.3.6.1, 3.3.6.2, 3.3.3.1, 3.4.4, 3.4.5, 3.6.1.3, TRM 3.4, ODCM 7.3.2)	**Will receive a full Group 6 isolation** (all Group 6 valves will close, reactor building will isolate, SBGT trains will start due to stack rad monitor trip signal), **override capability will be disabled**

Load: 120V Distribution Panel 2-32AB (HX0)
Location: Control Building 49' SE
Drawing Reference: LL-09341-25
Upstream Power Source: **120V Emergency Distribution Panel 2E7 (Normal)**
120V Emergency Distribution Panel 2E8 (Alternate)

CKT	LOAD DESCRIPTION	EFFECTS ON LOSS OF POWER
1	CAC System Inboard LOCA Signal Trip Logic (XU-53, H12-P606, P622) (TS 3.3.3.1, 3.3.6.1, 3.3.6.2, 3.4.4, 3.4.5, 3.6.1.3, TRM 3.4, ODCM 7.3.2)	**Group 6 Div I AC-powered CAC valves will close** (CAC-V172, V5, V6, V7, V162, V163, V9), **all Group 6 CAM, RIP and RXS valves will close**
2	CAC System Division 1 (AC) Isolation Trip Override Switch, CAC-CS-4178 and Stack Rad Monitor Isolation Override Switch (TS 3.3.3.1, 3.3.6.1, 3.3.6.2, 3.4.4, 3.4.5, 3.6.1.3, TRM 3.4, ODCM 7.3.2)	**Will receive a full Group 6 isolation on Unit 1 and Unit 2** (all Group 6 valves will close, reactor building will isolate, SBGT trains will start due to stack rad monitor trip signal), **override capability will be disabled on Unit 2 only.** 1/2-UA-03-5-4 and 1/2-UA-05-6-10 will alarm.

Categories

K/A:	216000 K2.01	Tier / Group:	T2G2
RO Rating:	2.8	SRO Rating:	2.8
LP Obj:	03-18H	Source:	BANK
Cog Level:	LOW	Category 8:	Y

17. Following a loss of feedwater, RCIC initiated on low reactor water level, then subsequently shut down on high reactor water level.

Current plant status is:
Reactor water level is 170 inches
RCIC steam supply valve (E51-F045) is closed
RCIC injection valve (E51-F013) is closed
RCIC flow controller in Auto set at 200 gpm

The RO opens the E51-F045 and then depresses the PF push button on the RCIC flow controller. No other actions are performed.

Which one of the following identifies the indicated flow on the RCIC flow controller that would be observed for these conditions?

A. ✓ 0 gpm

B. 200 gpm

C. 400 gpm

D. 500 gpm

3.4.3 Pump Discharge Valve, E51-F012, RCIC Injection Valve, E51-F013 (Figures 16-21, 22)

RCIC Pump injection to the vessel is controlled by the normally open Pump Discharge Valve, E51-F012, and the normally closed RCIC Injection Valve, E51-F013. The RCIC Injection Valve will automatically open upon receiving a low reactor water level signal (LL2) provided that neither the Turbine Trip and Throttle Valve, E51-V8, nor the Turbine Steam Supply Valve, E51-F045, is full closed. The RCIC Injection Valve will automatically close once either the Turbine Trip and Throttle Valve or the Turbine Steam Supply Valve is fully closed. If the Pump Discharge Valve is closed upon receiving the low reactor water level signal, it, too, will receive an automatic open signal. The Pump Discharge Valve may be controlled manually, using the RTGB P601 keylocked three-position CLOSE/AUTO/OPEN control switch, key removable in AUTO). The RCIC Injection Valve may also be controlled manually, using the RTGB P601 three-position CLOSE/AUTO/OPEN control switch.

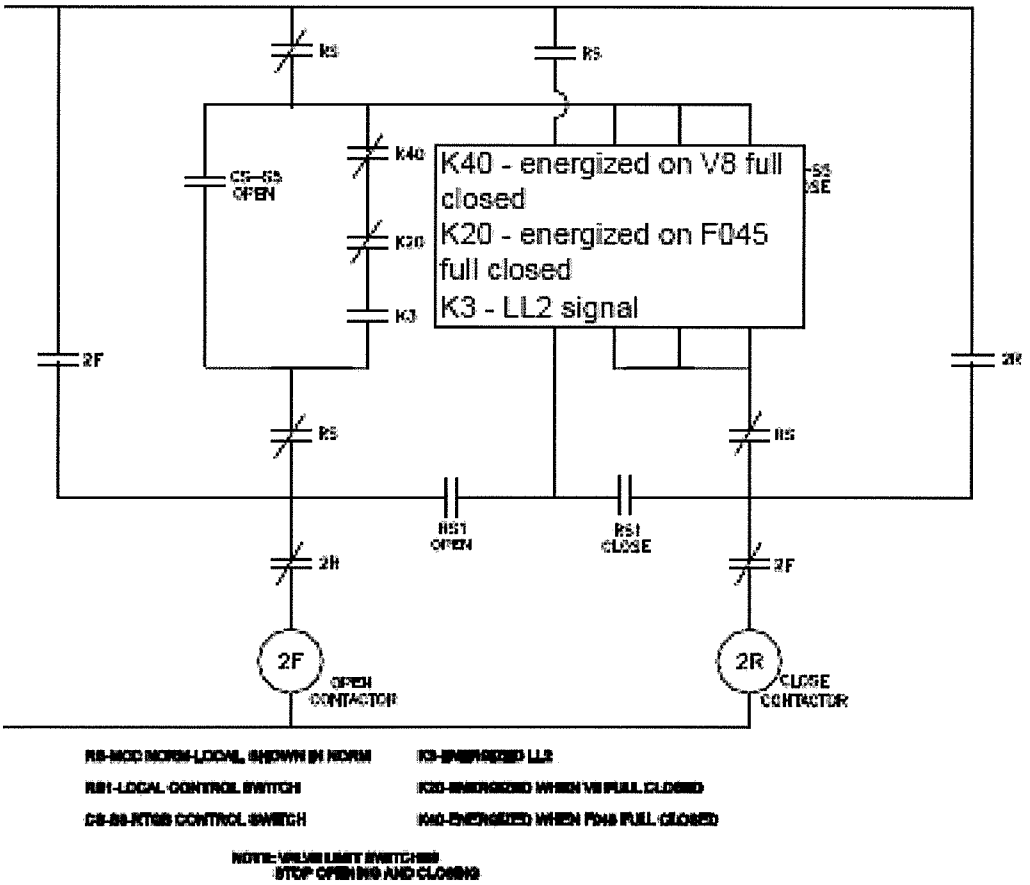

FIGURE 16-22
RCIC Injection Valve (F013) Control Logic

Categories

K/A:	217000 A1.01	Tier / Group:	T2G1
RO Rating:	3.7	SRO Rating:	3.7
LP Obj:	16-12A	Source:	BANK
Cog Level:	HIGH	Category 8:	Y

18. Given the following plant conditions with RCIC in pressure control mode:

RCIC controller output	70%
Bypass to CST Vlv, E51-F022	Throttled
RCIC Flow	300 gpm
RPV pressure	990 psig, slowly rising
RCIC controller	Automatic set @ 300 gpm

Which one of the following identifies how RPV pressure can be stabilized?

The RO can throttle the E51-F022 in the ____(1)____ direction, or by ____(2)____ the RCIC Flow Controller auto setpoint.

A. (1) open
(2) lowering

B. (1) open
(2) raising

C. (1) closed
(2) lowering

D. (1) closed
(2) raising

Feedback

K/A: 217000 A1.04
Ability to predict and/or monitor changes in parameters associated with operating the REACTOR CORE ISOLATION COOLING SYSTEM (RCIC) controls including:
Reactor pressure
(CFR: 41.5 / 45.5)

RO/SRO Rating: 3.6/3.6

Objective: LOI-CLS-LP-016-A Obj. 17b
Describe how the following evolutions are performed during operation of the RCIC system:
b. Adjusting RCIC flow in the reactor pressure control mode.

Reference: RCIC Hard Card

Cog Level: High

Explanation:
There are two ways to reduce the RPV pressure with the conditions given. One way is to open the 22 valve, there by increasing the size of the hole and mantaining the same flowrate, this will work until the controller is at 100% output. The second is to raise the controller setpoint thereby causing the turbine to work more (increase flow through the same size hole).

Distractor Analysis:
Choice A: Plausible becasue these are the opposite of the actual answers and if the operator was trying to raise RPV pressure this would be correct.

Choice B: Plausible because raising is correct and the operator could have a misconception about the 22 valve.

Choice C: Plausible because closing the 22 is correct and the operator could have a misconception about the flow controller.

Choice D: Correct answer, see explanation.

Notes

RCIC PRESSURE CONTROL
(OP-16 SECTION 8.2)

_____ 1. **ENSURE** THE FOLLOWING VALVES ARE OPEN: E51-V8 (VALVE POSITION), E51-V8 (ACTUATOR POSITION), AND E51-V9.
_____ 2. **OPEN** E51-F046
_____ 3. **START** VACUUM PUMP AND LEAVE SWITCH IN START.
_____ 4. **ENSURE** E51-F013 IS CLOSED
_____ 5. **ENSURE** E41-F011 IS OPEN
_____ 6. **THROTTLE OPEN** E51-F022 UNTIL DUAL INCATION IS OBTAINED
_____ 7. **OPEN** E51-F045
_____ 8. **THROTTLE OPEN** E51-F022 OR **ADJUST** RCIC FLOW CONTROL, E51-FIC-R600, TO OBTAIN DESIRED SYSEM PARAMETERS AND REACTOR PRESSURE.
_____ 9. **ENSURE** E51-F019 IS CLOSED WITH FLOW ABOVE 80 GPM.
_____ 10. **ENSURE** THE FOLLOWING VALVES ARE CLOSED: E51-F025, E51-F026, E51-F004, AND E51-F005.
_____ 11. **START** SBGT (OP-10)
_____ 12. **ENSURE** BAROMETRIC CNDSR CONDENSATE PUMP OPERATES

FOR SHUTDOWN REFER TO OP-16
FOR TRANSFER BETWEEN PRESSURE AND LEVEL CONTROL REFER TO OP-16

1/1086

Categories

K/A:	217000 A1.04	Tier / Group:	T2G1
RO Rating:	3.6	SRO Rating:	3.6
LP Obj:	16-17B	Source:	NEW
Cog Level:	HIGH	Category 8:	Y

19. Unit One is operating at power with CS pump 1B under clearance.
A small break LOCA occurs simultaneously with a Loss of Off-site Power to both units.

Only DG2 and DG3 start and tie onto their respective E bus.

The following plant conditions exist on Unit One:

AUTO DEPRESS TIMERS INITIATED	In alarm
REACTOR LOW WTR LEVEL INITIATION	In alarm
RPV pressure	600 psig
Drywell pressure	13 psig

Based on the conditions above, which one of the following identifies the status of ADS to depressurize the RPV for low pressure injection?

A. Not auto initiate due to loss of power to the Fluid Flow Detection cabinet.

B. Will auto initiate when RPV pressure lowers to 410 psig.

C. Not auto initiate due to the logic not made up.

D. Will auto initiate in 83 seconds.

Feedback

K/A: 218000 K3.01
Knowledge of the effect that a loss or malfunction of the AUTOMATIC DEPRESSURIZATION SYSTEM will have on following:
Restoration of reactor water level after a break that does not depressurize the reactor when required (CFR: 41.7 / 45.4)

RO/SRO Rating: 4.4/4.4

Objective: CLS-LP-20 Obj. 16b
Given plant conditions, predict how the following will be affected by a loss or malfunction of ADS/SRVs:
b. Reactor water level

Reference: SD-20

Cog Level: High

Explanation:
With the loss of offsite power and 1A CS pump under clearance this would leave only one pump available in each RHR loop. Therefore ADS logic is lost. Level will continue to lower until the ADS valves are manually opened (emergency depressurization) at which time the running low pressure pumps will be able to add water.

Distractor Analysis:
Choice A: Plausible because the FFD cabinet is powered from E8 and it has lost power. This only affects the acoustic monitoring system so alternate means of determining if the SRVs are open would have to be utilized.

Choice B: Plausible because 410 psig and hi drywell pressure is a LOCA signal for starting the pumps. The alarm though is the LL3 actuation so the pumps would already be running. The logic will not be made up with only one RHR pump in each loop.

Choice C: Correct answer, see explanation.

Choice D: Plausible because if the logic was made up this would be the correct answer.

4.1.2 Automatic Operation

The ADS logic automatically opens the ADS valves in the event the HPCI System fails to maintain reactor level during a LOCA. The seven ADS valves open automatically when all the following conditions are met on either of two logic channels (A or B) associated with ADS:

- Reactor low water level (LL3 from B21-LTS-N031A and C or B and D).
- Reactor confirmatory low water level (LL1 from B21-LTS-N042A or B).
- Operation of both pumps of an RHR loop or one Core Spray pump as indicated by a pump discharge pressure of 115 psig (either E11-PS-N016A AND C or B AND D or E11-PS-N020A AND C or B AND D for RHR or either E21-PS-N008A AND E11-PS-N009A or E21-PS-N008B AND E21-PS-N009B for CS).
- A time delay of 83 seconds has elapsed (timer B21-TDPU-K5A or B).
- AUTO/INHIBIT switches in AUTO for either or both logic channels A and B.

Categories

K/A:	218000 K3.01	Tier / Group:	T2G1
RO Rating:	4.4	SRO Rating:	4.4
LP Obj:	20-16B	Source:	NEW
Cog Level:	HIGH	Category 8:	

20. Reactor Recirculation pumps have tripped due to a low level condition.
G31-F001, RWCU Inboard Isol Vlv, is Closed.
G31-F004, RWCU Outboard Isol Vlv, is Open.

Which one of the following identifies what the Group 3 Isolation Status Box on ERFIS will display in five minutes?

A.✓ A green GROUP ISOL

B. A red NO GROUP ISOL

C. A yellow GROUP ISOL CMND

D. A green NO GROUP ISOL CMND

Feedback

K/A: 223002 A3.03
Ability to monitor automatic operations of the PRIMARY CONTAINMENT ISOLATION SYSTEM/NUCLEAR STEAM SUPPLY SHUT-OFF including:
SPDS/ERIS/CRIDS/GDS: Plant-Specific
(CFR: 41.7 / 45.7)

RO/SRO Rating: 2.5/2.8

Objective: LOI-CLS-LP-060-A Obj 4d
Describe the methods used to do the following on the ERFIS/SPDS Computer:
d. Obtain Group Isolation status including valve position

Reference: SD-60

Cog Level: High

Explanation:
ERFIS relies on the isolation signal to determine if an isolation is required. Since RWCU did receive a signal, ERFIS will recognize a valid isolation signal with at least one valve closed in the penetration path and remain Green and display GROUP ISOL.

Distractor Analysis:
Choice A: Correct answer, see explanation.

Choice B: Plausible because this is what would be expected with an isolation signal and no valves closed.

Choice C: Plausible because the isolation signal and valve closure time has not expired and can be confused with an incomplete isolation of the penetration flow path (both valves not closed).

Choice D: Plausible because the candidate does not recognize Recirc pump trip is LL2 (same as RWCU) would be indicated if no isolation signal present.

Notes

From SD-60

Event Status	Display Message	Color Code	Condition
Inactive	NO GROUP ISOL CMND	Green	1. No isolation signal
Safe	GROUP ISOL	Green	1. Isolation signal 2. Valve closure time exceeded 3. At least one valve in each path closed
Caution	GROUP ISOL CMND	Yellow	1. Isolation signal 2. Valve closure time not exceeded
Alarm	NO GROUP ISOL	Red	1. Isolation signal 2. Valve closure time exceeded 3. No valve closed in a path

Categories

K/A:	223002 A3.03	Tier / Group:	T2G1
RO Rating:	2.5	SRO Rating:	2.8
LP Obj:	60-4D	Source:	BANK
Cog Level:	HIGH	Category 8:	Y

21. Given the following small break LOCA conditions on Unit Two:

Drywell pressure	9.8 psig
Suppression chamber pressure	8.5 psig

Which one of the following identifies the response of suppression pool water level after initiating suppression pool sprays?

The suppression pool level indication will ____(1)____ slightly due to the ____(2)____ DP between the drywell and suppression pool.

A. (1) lower
(2) higher

B. (1) lower
(2) reduced

C. (1) rise
(2) higher

D. (1) rise
(2) reduced

Feedback

K/A: 230000 A1.06
Ability to predict and/or monitor changes in parameters associated with operating the RHR/LPCI: TORUS/SUPPRESSION POOL SPRAY MODE controls including:
Suppression pool level
(CFR: 41.5 / 45.5)

RO/SRO Rating: 3.3/3.3

Objective: N/A

Reference: none available

Cog Level: High

Explanation:With the SP at 8.5 psig and then sprays initiated the pressure will lower in the SP and this will cause the higher delta pressure between the DW and SP to force some water down the downcomers to slightly raise the water level in the SP due to the Higher dP. The pumps take a suction from the SP and then spray back to the SP.

Distractor Analysis:
Choice A: Plausible because a higher d/p would be developed from the spray initiation, but level would not lower based on dP.

Choice B: Plausible if the student has backward thinking of what is occurring with d/p. Lower pressure is lowering dP.

Choice C: Correct answer, see explanation

Choice D: Plausible because a lower d/p would cause level to rise but tthe d/p will increase when sprays are initiated.

Notes

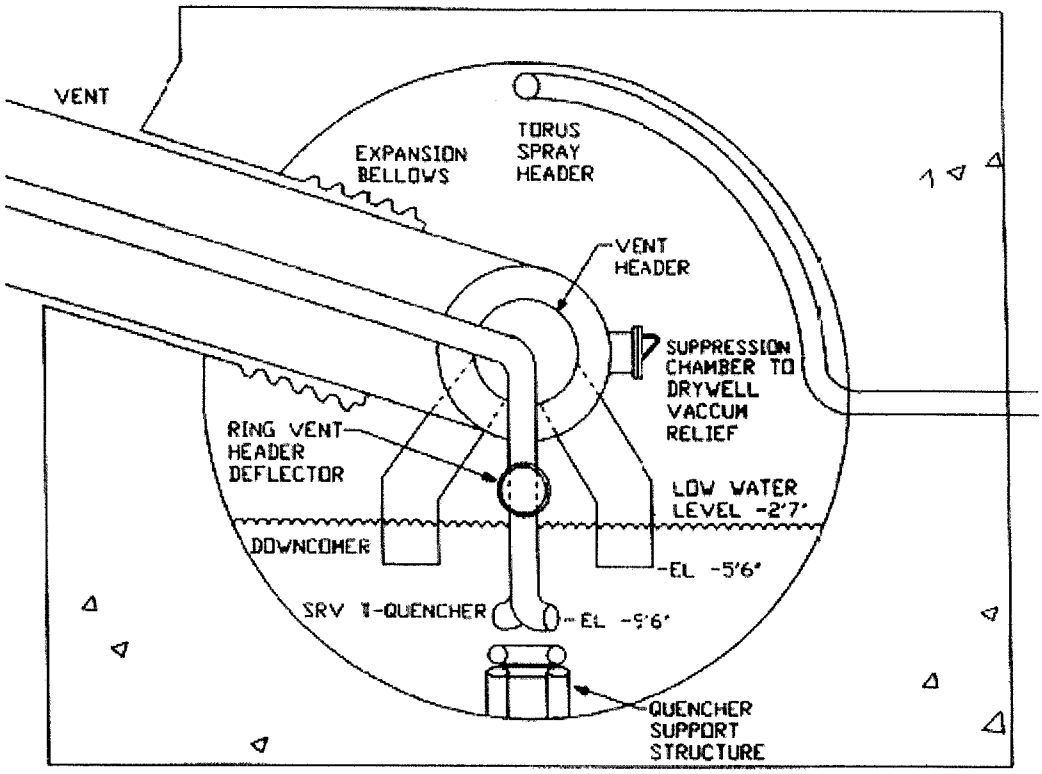

a slight increase will occur as water is pushed down the downcomers into the SP.

Categories

K/A:	230000 A1.06	Tier / Group:	T2G2
RO Rating:	3.3	SRO Rating:	3.3
LP Obj:	NA	Source:	NEW
Cog Level:	HIGH	Category 8:	

22. Given the following conditions with Unit One in Mode 5:

A single control rod is withdrawn to position 48 for blade removal
RWM is in Bypass
The control rod is selected
Rod Select Power is on

Which one of the following describes the adverse consequence if Rod Select power was turned off, then back on, for uncoupling?

A. A select block will occur.

B. A rod out block only will occur.

C. A rod insert block only will occur.

D. A rod insert and a rod out block will both occur.

Feedback

K/A: 234000 A4.02
Ability to manually operate and/or monitor in the control room:
Control rod drive system
(CFR: 41.7 / 45.5 to 45.8)

RO/SRO Rating: 3.4/3.7

Objective: CLS-LP-07 Obj. 10e
List the conditions that will result in the following:
e. Control Rod Block

Reference: SD-07

Cog Level: High

Explanation:
With the Mode Switch Not in Startup or Run, the one rod out permissive must be met, all control rods must be fully inserted when select power is turned on, or the permissive is not satisfied. Once a rod is selected and withdrawn with the permissive satisfied, no other rod can be selected unless select power is turned off, then back on, but this results in a rod out block.

Distractor Analysis:
Choice A: Plausible because it is a misconception about being able to select a different rod.

Choice B: Correct answer, see explanation

Choice C: Plausible because it may be thought that since the rod is withdrawn it may give a insert block.

Choice D: Plausible because it may be thought that it would prevent withdrawal of the inserted rods and prevent insertion of the withdrawn rod.

Notes

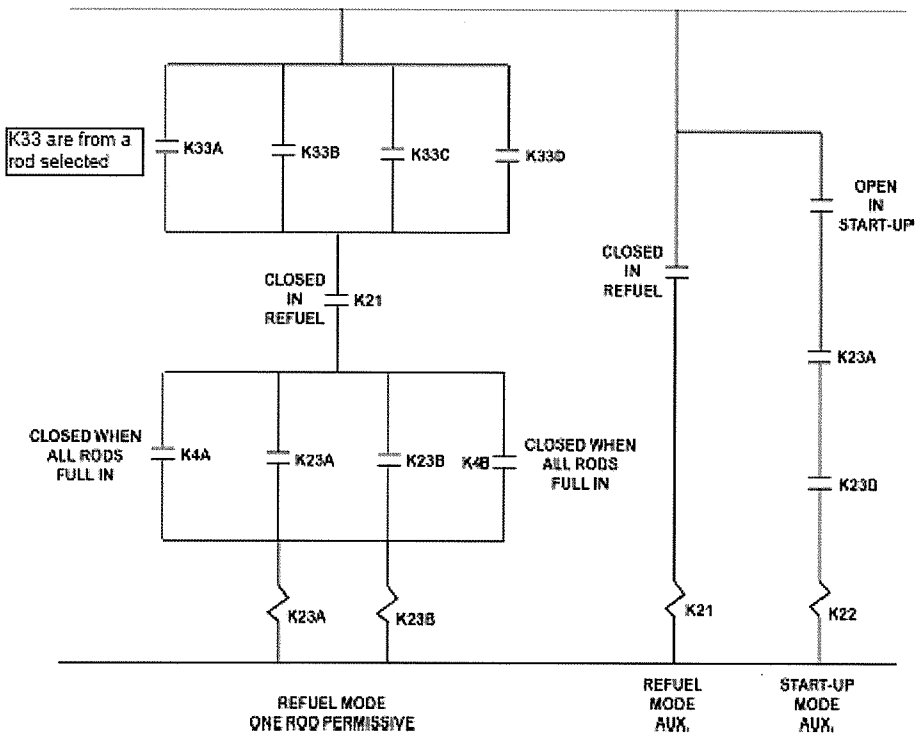

FIGURE 07-13
Refuel Mode Logic Circuits

FIGURE 07-15
Rod Withdrawal Block Circuitry (Channel A)

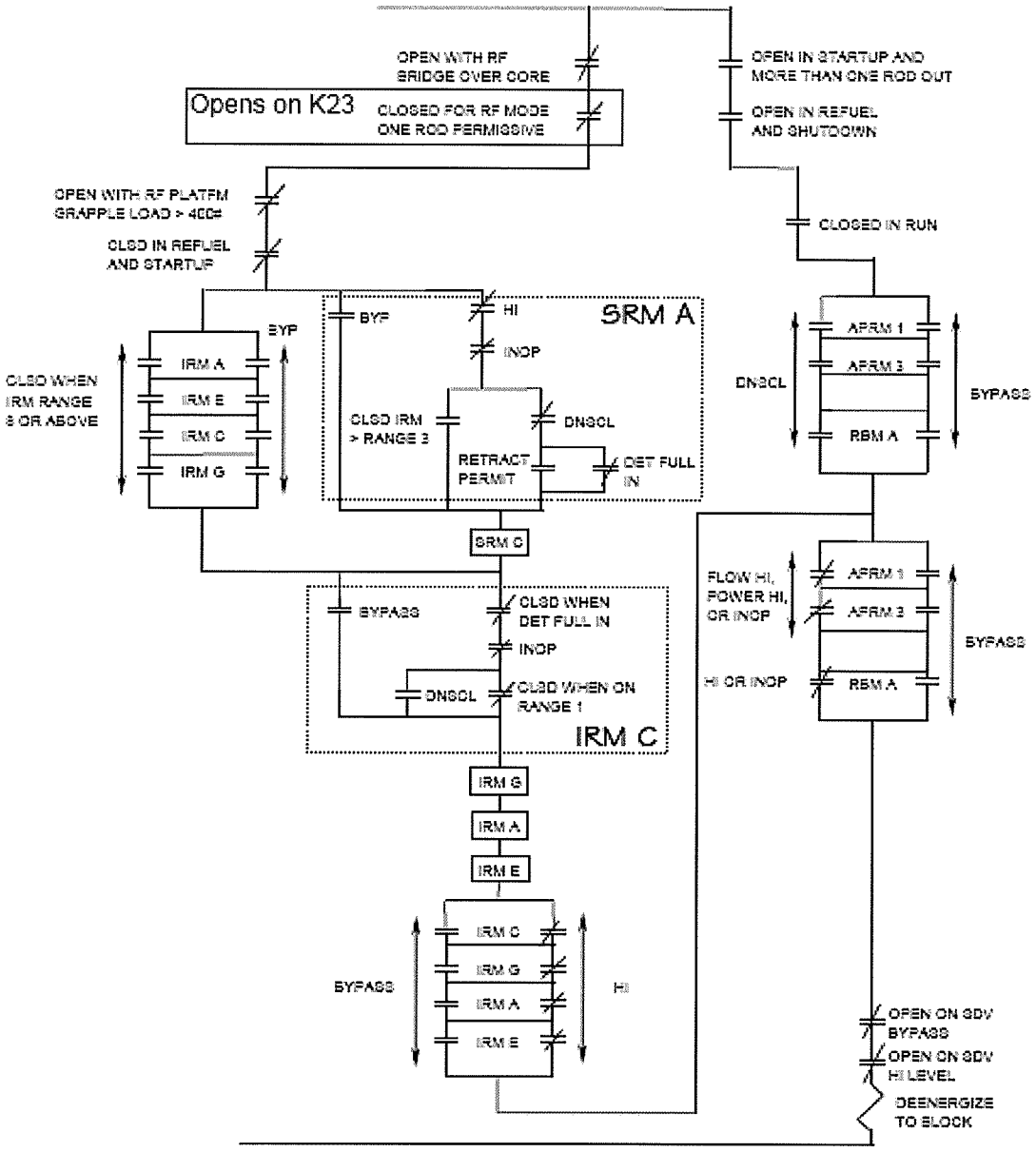

Categories

K/A:	234000 A4.02	Tier / Group:	T2G2
RO Rating:	3.4	SRO Rating:	3.7
LP Obj:	7-10E	Source:	BANK
Cog Level:	HIGH	Category 8:	Y

23. The following "Blue Bar" annunciators are received while performing 0PT-11.1.2, Automatic Depressurization System and Safety Relief Valve Operability Test:

SPTMS DIV I BULK WTR SETPOINT TS1
SPTMS DIV II BULK WTR SETPOINT TS1

Which one of the following identifies the correct interpretation of Suppression Pool temperature as it applies to receiving the above annunciators?

Suppression Pool temperature has just reached the annunciator setpoint of:

A. 95°F.

B. 100°F.

C. 105°F.

D. 110°F.

Feedback

K/A: 239002 A4.04
Ability to manually operate and/or monitor in the control room:
Suppression pool temperature
(CFR: 41.7 / 45.5 to 45.8)

RO/SRO Rating: 4.3/4.3

Objective: CLS-LP-302M Obj. 1
Given plant conditions, determine if the following AOPs should be entered:
c. AOP-30

Reference: APP UA-12 5-4(5-5)

Cog Level: low

Explanation:
This alarm setpoint is 95°F.

Distractor Analysis:
Choice A: Correct Answer, see explanation

Choice B: Plausible because this is a homogeneous setpoint distractor

Choice C: Plausible because this is the setpoint for *SPTMS DIV I BULK WTR TEMP SETPT TMAX*

Choice D: Plausible because this is the setpoint for Boron Injection Initiation Temperature (BIIT)

Notes

DEVICE/SETPOINTS

SPTMS Microprocessor CAC-TY-4426-1 95°F

POSSIBLE PLANT EFFECTS

1. Manual Reactor Scram required if suppression pool temperature exceeds 110°F.
2. This annunciator is required to be operable to support Suppression Chamber Temperature Instrumentation operability; annunciator inoperability may result in a TRM Compensatory Measure.

SPTMS DIV II BULK WTR TEMP SETPT TMAX

DEVICE/SETPOINTS

SPTMS Microprocessor CAC-TY-4426-2 105°F

POSSIBLE PLANT EFFECTS

1. Manual Reactor Scram required if suppression pool temperature exceeds 110°F.

From PCCP:

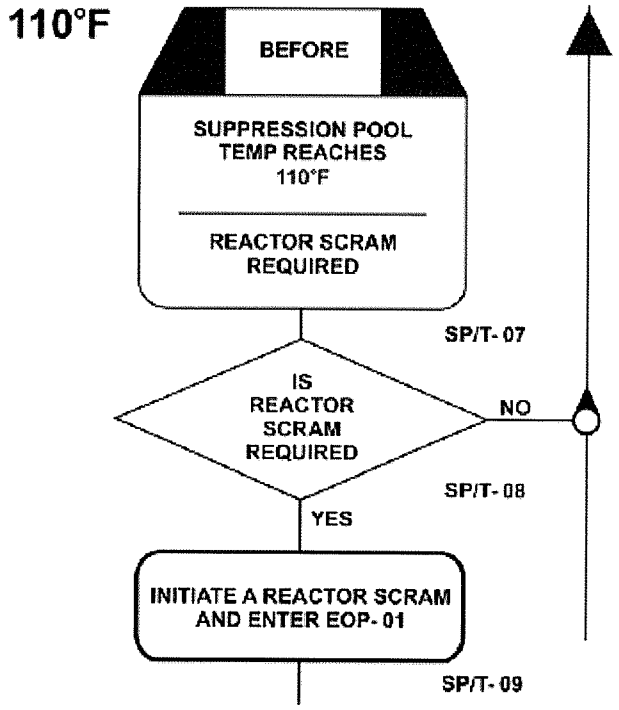

Categories

K/A:	239002 A4.04	Tier / Group:	T2G1
RO Rating:	4.3	SRO Rating:	4.3
LP Obj:	302M-1C	Source:	BANK
Cog Level:	LOW	Category 8:	Y

24. The DFCS control signal input to 2A RFP has been lost. The RO observes the following:

RFP A CONTROL TROUBLE alarm is received
RFP A Manual/DFCS selector switch is in DFCS
DFCS Control light for RFP A on XU-1 is out

Which one of the following describes how RFP 2A will respond, and what operator action is required by 2APP-UA-13, *RFP A CONTROL TROUBLE*, to adjust the speed of RFP 2A?

RFP 2A speed will ____(1)____.
The operator can control RFP A speed by ____(2)____.

A. (1) drop to the idle speed setpoint
(2) operating the RFP A Raise/Lower control switch

B. (1) remain at the last known demand
(2) operating the RFP A Raise/Lower control switch

C. (1) drop to the idle speed setpoint
(2) placing the RFP A Speed Controller in Manual and adjusting the output demand

D. (1) remain at the last known demand
(2) placing the RFP A Speed Controller in Manual and adjusting the output demand

Feedback

K/A: 259001 A2.06
Ability to (a) predict the impacts of the following on the REACTOR FEEDWATER SYSTEM ; and (b) based on those predictions, use procedures to correct, control, or mitigate the consequences of those abnormal conditions or operations:
Loss of A.C. electrical power
(CFR: 41.5 / 45.6)

RO/SRO Rating: 3.2/3.2

Objective: CLS-LP-32.3 Obj. 10j
Given plant conditions and one or more of the following events use plant procedures to determine the actions required to control and/or mitigate the consequences of the event:
J. Loss of signal from the DFCS

Reference: UA-13 6-5

Cog Level: high

Explanation: UPS supplies power to the controls.
From OP-32, Section 5.7.2 (Notes)
IF RFPT B(A) *MAN/DFCS* selector switch is in *DFCS,* AND the DFCS control signal subsequently drops below 2450 rpm, OR increases to greater than 5450 rpm, THEN Woodward 5009 digital controls will automatically assume RFPT speed control and maintain current speed. In this condition, the RFPT will only respond to *LOWER/RAISE* speed control switch commands

From APP UA-13 6-5 (RFP A Control Trouble)
IF RFPT 2A *DFCS CTRL* light on RTGB XU-1 is NOT illuminated, THEN attempt to control RFP turbine speed as necessary using the *LOWER/RAISE* speed control switch

Distractor Analysis:
Choice A: Plausible because the woodward manual control signal automatically tracks the DFCS output signal. An operator without this knowledge could believe the RFP speed would drop to minimum woodward control speed with the DFCS control signal failed

Choice B: Correct answer, see explanation

Choice C: Plausible because the DFCS control signal has failed. with the DFCS Control light out, the RFP is under manual control of the woodward governor and adjusting the output of the individual RFP Speed Controller will have no effect. An operator without understanding of the hierarchy of the RFP control system could believe this choice is correct.

Choice D: Plausible because the DFCS control signal has failed. with the DFCS Control light out, the RFP is under manual control of the woodward governor and adjusting the output of the individual RFP Speed Controller will have no effect. An operator without understanding of the hierarchy of the RFP control system could believe this choice is correct.

Notes

ACTIONS

1. Inform Turbine Building AO of alarm initiation and request investigation of alarm condition.
2. Monitor reactor water level and feedwater flow for possible loss of A RFP.
3. IF RFPT 2A *DFCS CTRL* light on RTGB XU-1 is NOT illuminated, THEN attempt to control RFP turbine speed as necessary using the *LOWER/RAISE* speed control switch.
4. Refer to DAOP-23.0.

NOTE:	**IF** RFPT B(A) *MAN/DFCS* selector switch is in *DFCS*, **AND** the DFCS control signal subsequently drops below 2450 rpm, **OR** increases to greater than 5450 rpm, **THEN** Woodward 5009 digital controls will automatically assume RFPT speed control and maintain current speed. In this condition, the RFPT will only respond to *LOWER/RAISE* speed control switch commands until the *MAN/DFCS* selector switch is placed in *MAN*, DFCS *CTRL RESET* pushbutton is depressed, **AND** the *MAN/DFCS* selector switch returned to *DFCS*.

Load: 120V UPS Distribution Panel 2-V10A
Location: Control Building 49' SW
Drawing Reference: F-03027
Upstream Power Source: **120V UPS Distribution Par**

CKT	LOAD DESCRIPTION
3	Unit 2 FW Control System: RFPT A & B/Main Turbine High Level Trip Circuit "A" MV/I converters for 2-C32-TE-N006A and 2-C32-TE-N006B Digital FWCS Rx Scram B Input Power supplies: 2-C32-ES-5782A & B (Digital FWCS) 2-C32-ES-5783A & B (Digital FWCS) 2-C32-ES-5784A & B (Digital FWCS) 2-C32-ES-5786A & B (Digital FWCS) 2-C32-K620 for 2-C32-PT-N007 (Turbine Steam Flow) and 2-C32-PT-N008 (Reactor Pressure)

4.2.4 DFCS Control Signal Failure

If the 5009 control system detects that the Remote Speed Setpoint (RSS) from the DFCS is outside the failure limits, an RSS signal failure condition is set and, if the 5009 control system was in the DFCS mode, an automatic transfer to the manual mode will occur. The RFPT speed setpoint (and hence RFPT speed) will be maintained at the last "good" value and can be controlled using the Panel XU-1 RAISE / LOWER switch (Figure 32.3-14). The MANUAL / DFCS switch should be placed in the MANUAL position.

Categories

K/A:	259001 A2.06	Tier / Group:	T2G2
RO Rating:	3.2	SRO Rating:	3.2
LP Obj:	32.3-10J	Source:	BANK
Cog Level:	HIGH	Category 8:	Y

25. Unit One is operating at rated power when the Feedwater Flow B indicator has failed upscale.

Which one of the following identifies the effect this condition will have on reactor water level control with no operator actions taken?

A. DFCS transfers to 1-element control and maintains current level.

B. DFCS transfers to 1-element control and RFPs reduce feedwater flow causing a reactor scram on low level. X

C. DFCS remains in 3-element control and maintains current level.

D. DFCS remains in 3-element control and RFPs reduce feedwater flow causing a reactor scram on low level. X

Feedback

K/A: 259002 K6.04
Knowledge of the effect that a loss or malfunction of the following will have on the REACTOR WATER LEVEL CONTROL SYSTEM:
Reactor feedwater flow input
(CFR: 41.7 / 45.7)

RO/SRO Rating: 3.1/3.1

Objective: CLS-LP-32.2 Obj 7b
Given plant conditions, determine the response of the DFCS to the following events:
b. Loss of any feed flow input

Reference: APP A-07 4-2, *FW CTL SYS TROUBLE*

Cog Level: high

Explanation:
The following signals are the permissives to operate in 3 element control:
- All steam flows (4) outputs are valid (within 10% of avg)
- All feed flows (2) outputs are valid (within 10% of both)
- Master control station in Automatic
- At least one (1) Feed pump control station is in Automatic
- Reactor Power is > 20%
- Feed flow and Steam flow matched

with the feed flow failure this will transfer to 1 element control. Level will be maintained based on level only.

Distractor Analysis:
Choice A: Correct answer, see explanantion

Choice B: Plausible because it will transfer to 1 element control but the feed flow failure will not cause DFCS to lower the output of the feed pumps based on the upscale failure of the feed flow instrument. This is an input to the three element control signal. Which would on a slow raising start to lower but when it goes to 1 element that signal is removed. the student may think that since it has a high flow condition that feed flow may be reduced causing a scram on low level.

Choice C: Plausible because level will be maintained at the current setpoint but it will transfer to single element control on greater than 10% difference between feed flow signals.

Choice D: Plausible because feed flow is an input to 3 element control and the feed flow failure will not cause DFCS to lower the output of the feed pumps based on the upscale failure of the feed flow instrument. the student may think that since it has a high flow condition that feed flow may be reduced causing a scram on low level. It will transfer to single element control.

WHITE

4-2

FW CTL SYS TRBL

Page 1 of 2

1.0 OPERATOR ACTIONS:

1.1 **CONFIRM** which condition is causing this alarm by observation of the components listed under the causes section.

1.2 **OBSERVE** Automatic Functions:

1.2.1 One or more of the following automatic actions may have occurred:

1. Possible RFP speed locked at speed signal sensed at time of failure.
2. Transfer to redundant digital feedwater control channel.
3. Transfer to single element control
4. Transfer to opposite level transmitter (C32-LT-N004A/B)
5. Turbine trip and possible reactor scram from high reactor water level.

2.7 Reactor Feedwater Flow Transmitters A or B:

2.7.1 High (8.0 Mlbs/hr)

2.7.2 Low (0.2 Mlbs/hr) when greater than 10% total feed flow.

2.7.3 Greater than a 10% mismatch between the averaged feed flow.

2.7.4 Rate of Change 1.6 Mlbs/Hr/Sec

1APP-A-07	Rev. 33	Page 25 of 45

From SD-32.2

4.2.4 Loss of Any Feed Flow Input

There are 2 normal feed flow inputs that are summed to provide an output signal to the following and dependent upon initial power level and severity of failure the following may occur:

- Auto transfer to 1 element operation resulting from real alarm block criteria being exceeded OR individual feed flow not within 10% of average feed flow OR total feed flow now < 20%.
- Recirc pump runback if total feedwater flow goes < 16.4%
- Hydrogen Water Chemistry injection solenoids trip if total feed flow < 17.3%.
- Hydrogen Water Chemistry may trip on external setpoint step change (>5 SCFM)

With the DFCS in single element control, the control signal is generated based only on reactor water level. Steam and feedwater mass flow rates are not used to modify the level signal.

Categories

K/A:	259002 K6.04	Tier / Group:	T2G1
RO Rating:	3.1	SRO Rating:	3.1
LP Obj:	32.2-7B	Source:	NEW
Cog Level:	HIGH	Category 8:	Y

25. Unit One is operating at rated power when the Feedwater Flow B indicator has failed upscale.

Which one of the following identifies the effect this condition will have on reactor water level control with no operator actions taken?

A. DFCS transfers to 1-element control and maintains current level.

B. DFCS transfers to 1-element control and RFPs reduce feedwater flow causing a reactor scram on low level.

C. DFCS remains in 3-element control and maintains current level.

D. DFCS remains in 3-element control and RFPs reduce feedwater flow causing a reactor scram on low level.

Feedback

K/A: 259002 K6.04
Knowledge of the effect that a loss or malfunction of the following will have on the REACTOR WATER LEVEL CONTROL SYSTEM:
Reactor feedwater flow input
(CFR: 41.7 / 45.7)

RO/SRO Rating: 3.1/3.1

Objective: CLS-LP-32.2 Obj 7b
Given plant conditions, determine the response of the DFCS to the following events:
b. Loss of any feed flow input

Reference: APP A-07 4-2, *FW CTL SYS TROUBLE*

Cog Level: high

Explanation:
The following signals are the permissives to operate in 3 element control:
All steam flows (4) outputs are valid (within 10% of avg)
All feed flows (2) outputs are valid (within 10% of both)
Master control station in Automatic
At least one (1) Feed pump control station is in Automatic
Reactor Power is > 20%
Feed flow and Steam flow matched
with the feed flow failure this will transfer to 1 element control. Level will be maintained based on level only.

Distractor Analysis:
Choice A: Correct answer, see explanantion

Choice B: Plausible because it will transfer to 1 element control but the feed flow failure will not cause DFCS to lower the output of the feed pumps based on the upscale failure of the feed flow instrument. This is an input to the three element control signal. Which would on a slow raising start to lower but when it goes to 1 element that signal is removed. the student may think that since it has a high flow condition that feed flow may be reduced causing a scram on low level.

Choice C: Plausible because level will be maintained at the current setpoint but it will transfer to single element control on greater than 10% difference between feed flow signals.

Choice D: Plausible because feed flow is an input to 3 element control and the feed flow failure will not cause DFCS to lower the output of the feed pumps based on the upscale failure of the feed flow instrument. the student may think that since it has a high flow condition that feed flow may be reduced causing a scram on low level. It will transfer to single element control.

WHITE

4-2

FW CTL SYS TRBL

Page 1 of 2

1.0 OPERATOR ACTIONS:

1.1 **CONFIRM** which condition is causing this alarm by observation of the components listed under the causes section.

1.2 **OBSERVE** Automatic Functions:

1.2.1 One or more of the following automatic actions may have occurred:

1. Possible RFP speed locked at speed signal sensed at time of failure.
2. Transfer to redundant digital feedwater control channel.
3. Transfer to single element control
4. Transfer to opposite level transmitter (C32-LT-N004A/B)
5. Turbine trip and possible reactor scram from high reactor water level.

2.7 Reactor Feedwater Flow Transmitters A or B:

2.7.1 High (8.0 Mlbs/hr)

2.7.2 Low (0.2 Mlbs/hr) when greater than 10% total feed flow.

2.7.3 Greater than a 10% mismatch between the averaged feed flow.

2.7.4 Rate of Change 1.6 Mlbs/Hr/Sec

1APP-A-07	Rev. 33	Page 25 of 45

From SD-32.2

4.2.4 Loss of Any Feed Flow Input

There are 2 normal feed flow inputs that are summed to provide an output signal to the following and dependent upon initial power level and severity of failure the following may occur:

- Auto transfer to 1 element operation resulting from real alarm block criteria being exceeded OR individual feed flow not within 10% of average feed flow OR total feed flow now < 20%.
- Recirc pump runback if total feedwater flow goes < 16.4%
- Hydrogen Water Chemistry injection solenoids trip if total feed flow < 17.3%.
- Hydrogen Water Chemistry may trip on external setpoint step change (>5 SCFM)

With the DFCS in single element control, the control signal is generated based only on reactor water level. Steam and feedwater mass flow rates are not used to modify the level signal.

Categories

K/A:	259002 K6.04	Tier / Group:	T2G1
RO Rating:	3.1	SRO Rating:	3.1
LP Obj:	32.2-7B	Source:	NEW
Cog Level:	HIGH	Category 8:	Y

26. Unit Two is operating at rated power with Standby Gas Treatment (SBGT) System controls aligned as follows:

Train A in SYST A PREF
Train B in STBY

Drywell cooling is lost and the reactor scrams on high drywell pressure. Reactor water level drops to 130 inches and is now rising.

Which one of the following identifies the SBGT system flows that the RO would verify on the XU-51 panel?

SBGT Train A flow verified to be ____(1)____ SCFM and
SBGT Train B flow verified to be ____(2)____ SCFM.

A. (1) 0
(2) 0

B. (1) 0
(2) ~3300

C. (1) ~3300
(2) 0

D. (1) ~3300
(2) ~3300

Feedback

K/A: 261000 A3.01
Ability to monitor automatic operations of the STANDBY GAS TREATMENT SYSTEM including:
System flow
(CFR: 41.7 / 45.7)

RO/SRO Rating: 3.2/3.3

Objective: CLS-LP-10 Obj. 4
Given plant conditions determine if SBGTs should have initiated.

Reference: SD-10 / OP-10

Cog Level: high

Explanation:
With the B SBGT train in STBY it will not auto start, this is more like an Off position. There is an auto start signal from high DW pressure and flow should be verified to be greater than 3000 scfm. The control room indicators scale is from 0 to 4500 scfm. Normal system flow is ~3300 scfm.

Distractor Analysis:
Choice A: Plausible because if there was not an initiation signal this would be correct.

Choice B: Plausible because there is an initiation signal but only one train will operate. If the examinee thinks only B only will start then it would indicate 3300 scfm.

Choice C: correct answer, see explanation

Choice D: Plausible because there is a initiation signal and the examinee may think that both trains would initiate. The standby position is a common misunderstanding, this is actually an OFF position.

Notes

From OP-10:

SBGT System is normally in standby with the *SBGT A(B)* control switch in *PREF*. However, when the SBGT System is in operation, the following parameters and limits should be observed:

6.1	SBGT A (B) Flow VA-FI-3150-1 (FI-3151-1) Panel XU-51 VA-FI-3150-2 (FI-3151-2) Local	Greater than or equal to 3000 scfm.

3.3 Any of the following signals will automatically start the Standby Gas Treatment System:

3.3.1 High drywell pressure

3.3.2 Low Level 2

3.3.3 High radiation in the Reactor Building exhaust ventilation duct

3.3.4 Reactor Building (RB) exhaust temperature high

3.3.5 Main Stack Radiation Monitor High-High

3.4 The Standby Gas Treatment System will **NOT** automatically start if the control switch is in *STBY*.

Categories

K/A:	261000 A3.01	Tier / Group:	T2G1
RO Rating:	3.2	SRO Rating:	3.3
LP Obj:	10-4	Source:	NEW
Cog Level:	HIGH	Category 8:	Y

27. Which one of the following identifies the affect on the manually initiated, automatically executed fast bus transfer capability if a trip of the feeder breaker to 125V DC panel 9A occurs?

The bus transfer will ____(1)____ if attempted for bus 1B.
The bus transfer will ____(2)____ if attempted for bus 1C.

A. (1) occur
   (2) occur

B. (1) occur
   (2) not occur

C. (1) not occur
   (2) occur

D. (1) not occur
   (2) not occur

Feedback

K/A: 262001 K6.01
Knowledge of the effect that a loss or malfunction of the following will have on the A.C. ELECTRICAL DISTRIBUTION:
D.C. power
(CFR: 41.7 / 45.7)

RO/SRO Rating: 3.1/3.4

Objective: CLS-LP-50.1 Obj 7
Given plant conditions, predict the effect a loss of DC control power will have on the 4160 VAC System.

Reference: OI-50

Cog Level: low

Explanation:
BOP Bus 1B has AUTO control power transfer capability where 1C and 1D do not.

Distractor Analysis:
Choice A: Plausible because the auto transfer of control power will occur on 1B, but will not on 1C and D. Recent plant mods have removed some of the auto transfer capabilities on some of the DC control power arrangements (E-busses require a manual transfer of control power).

Choice B: Correct answer, see explanation.

Choice C: Plausible because the examinee may have the logics reversed.

Choice D: Plausible because the auto bus transfer will not occur on 1C and D, but it will on 1B. Recent plant mods have removed some of the auto transfer capabilities on some of the DC control power arrangements.

Notes

PANEL: 9A Reference Drawing: LL-30024-12	LOCATION: Unit 1 Turbine Building, 20', Switch gear area	NORMAL SUPPLY: Switchboard 1B	ALTERNATE SUPPLY: Switchboard 1A (Mechanical Interlock)

CKT #	LOAD	EFFECT
3	Switchgear Bus 1B Control Power	1. Automatic Bus Transfer to alternate power, Panel 10A, ckt. 11.
6	Switchgear Bus 1C Control Power	1. Loss of control power to 4KV loads on Bus 1C. 2. Loss of 4KV breaker operation, manual or automatic.
21	Switchgear Bus 1D Control Power	1. Loss of control power to 4KV loads on Bus 1D. 2. Loss of 4KV breaker operation, manual or automatic.

Categories

K/A:	262001 K6.01	Tier / Group:	T2G1
RO Rating:	3.1	SRO Rating:	3.4
LP Obj:	50.1-7	Source:	BANK
Cog Level:	LOW	Category 8:	Y

28. Which one of the following correctly completes the statements below if a Loss of Offsite Power (LOOP) occurs on Unit Two with DG4 under clearance?

RHR Pump 2B ____(1)____ lost power.
2-E11-F015B, LPCI Inboard Injection Valve, ____(2)____ lost power.

A. (1) has
(2) has

B.✓ (1) has
(2) has not

C. (1) has not
(2) has

D. (1) has not
(2) has not

Feedback

K/A: 262001 K6.02
Knowledge of the effect that a loss or malfunction of the following will have on the A.C. ELECTRICAL DISTRIBUTION:
Off-site power
(CFR: 41.7 / 45.7)

RO/SRO Rating: 3.6/3.9

Objective: CLS-LP-39 Obj 9c
Describe the effects on the plant if one or more of the EDGs failed to start during the following conditions:
c. LOOP

Reference: SD-17

Cog Level: high

Explanation:
B RHR Pump receives power from E4 which is feed by DG #4. since it has failed then E4 would be de-energized and the B RHR Pump would have no power. The B Loop injection valves are powered from the same division, but opposite units E Bus. That would be E2, which does have power for the injection valves and D RHR pump.

Distractor Analysis:
Choice A: Plausible the B Pump has lost power and one would logically think that the B Loop would be powered by the Div II power source, which is correct except that it is from Unit 1 Div II.

Choice B: Correct answer, see explanation

Choice C: Plausible because the D RHR has not lost power and one would logically think that the B Loop would be powered by the Div II power source, which is correct except that it is from Unit 1 Div II.

Choice D: Plausible because the D RHR has not lost power and the injection valve has not lost power.

Notes

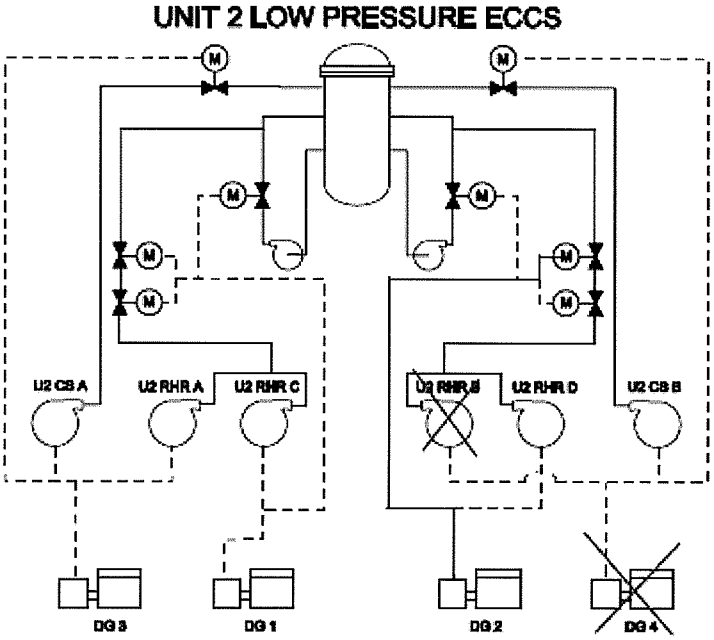

NOTE: INJECTION FLOW PATH AND POWER SUPPLIES SHOWN. LOGIC & OTHER FLOW PATHS NOT SHOWN.

Categories

K/A:	262001 K6.02	Tier / Group:	T2G1
RO Rating:	3.6	SRO Rating:	3.9
LP Obj:	39-9C	Source:	NEW
Cog Level:	LOW	Category 8:	Y

29. Which one of the following identifies an instrument that is powered from UPS and is required by Technical Specification 3.3.3.1, Post Accident Monitoring Instrumentation?

A. Drywell Rad Monitor

B. Rod Worth Minimizer

C. Reactor Vessel Pressure recorder

D. Shutdown Range reactor water level indicators

Feedback

K/A: 262002 G2.04.03
Ability to identify post-accident instrumentation.
Uninterruptable Power Supply (A.C./D.C.)
(CFR: 41.6 / 45.4)

RO/SRO Rating: 3.7/3.9

Objective: CLS-LP-01.2 Obj. 12
Given plant conditions and TS, including Bases, TRM, ODCM, and COLR, determine wether given plant conditions meet minimum TS requirements associated with Reactor Vessel Instrumentation System.

Reference: OI-50.5, TS 3.3.3.1

Cog Level: Low

Explanation:
TRM 3.4 identifies the PAM instrumentation requirements. The reactor vessel pressure recorder and transmitters that feed them are in the table and are powered from UPS . DW Rad Monitor is not powered from UPS, but is in the TS table. The RWM is powered from UPS but is not in the PAM TS but is TS related. The N026s are in the TS PAM table and are not powered from UPS.

Distractor Analysis:
Choice A: Plausible because this is a TS PAM instrumentation, not powered from UPS, powered from 31AB

Choice B: Plausible because this is powered from UPS and is TS related, but not PAM TS.

Choice C: Correct answer, see explanation

Choice D: Plausible because this is a TS PAM instrument, but not powered from UPS.

Notes

Table 3.3.3.1-1 (page 1 of 1)
Post Accident Monitoring Instrumentation

FUNCTION	REQUIRED CHANNELS	CONDITIONS REFERENCED FROM REQUIRED ACTION D.1
1. Reactor Vessel Pressure	2	E
2. Reactor Vessel Water Level		
a. -150 inches to +150 inches	2	E
b. 0 inches to +210 inches	2	E
c. -150 inches to +560 inches	2	E
3. Suppression Chamber Water Level	2	E
4. Suppression Chamber Water Temperature	2	E
5. Suppression Chamber Pressure	2	E
6. Drywell Pressure	2	E
7. Drywell Temperature	2	E
8. PCIV Position	2 per penetration flow path[a][b]	E
9. (Not Used.)		
10. Drywell Area Radiation	2	F

The power supplies for the Reactor Vessel Pressure Instruments are:

B21-PT-N045A/C	125 VDC 1(2)A Pnl. 3A & 11A (4A & 12A)	(XU-63)
B21-PI-R605A	125 VDC 1(2)A Pnl. 3A & 11A (4A & 12A)	(XU-63)
B21-PT-NO45B/D	125 VDC 1(2)B Pnl. 3B & 11B (4B & 12B) 125	(XU-64)
B21-PI-R605B	VDC 1(2)B Pnl. 3B & 11B (4B & 12B)	(XU-64)
C32-PT-N005A/B	UPS Panels V9A (V10A) or DC Panels 3B (4B)	
C32-LPR-R608	UPS Panel V7A (8A)	
C32-PT-3332	125 VDC 1(2)B MCC 1(2)XDB	
C32-PI-3332	125 VDC 1(2)B MCC 1(2)XDB	
C32-PT-N008	UPS BUS 1(2)A Pnl. V9A (V10A)	
C32-LPR-R609	UPS BUS 1(2)A Pnl V7A (V8A)	

Load: 120V UPS Distribution Panel 1-V9A (HG9) Location: Control Building 49' NW Drawing Reference: F-90098 Upstream Power Source: **120V UPS Distribution Panel 1-1A-UPS**		
CKT	**LOAD DESCRIPTION**	**EFFECTS ON LOSS OF POWER**
1	5VDC and 28VDC Power Supplies for Control Rod Position Indication System (RPIS) Cabinet 1-H12-P615; Rod Worth Minimizer (RWM) NUMAC Drawer 1-C11-CNV-5516, 1-H12-P607 (TS 3.1.3, 3.3.2.1)	Loss of rod position indication on four-rod display panel and full core display, loss of RWM, cannot move control rods, A-05-5-2 will alarm

The power supplies for the Shutdown Range Instruments are:

B21-LT-N027A & B21-LT-7468A	Emerg. 120 VAC Pnl. 1(2)AB
B21-LI-R605A	Emerg. 120 VAC Pnl. 1(2)AB
B21-LT-N027B & B21-LT-7468B	Emerg. 120 VAC Pnl. 1(2)B

Categories

K/A:	262002 G2.04.03	Tier / Group:	T2G1
RO Rating:	3.7	SRO Rating:	3.9
LP Obj:	1.2-12	Source:	NEW
Cog Level:	LOW	Category 8:	Y

30. Which one of the following identifies the power supply to the Main Turbine Emergency Bearing Oil Pump (EBOP)?

A. 480V AC Division I Emergency Bus

B. 480V AC Division II Emergency Bus

C. 250 VDC Division I

D. 250 VDC Division II

Feedback

K/A: 263000 K2.01
Knowledge of electrical power supplies to the following:
Major D.C. loads
(CFR: 41.7)

RO/SRO Rating: 3.1/3.4

Objective: CLS-LP-26.1 Obj. 5c
Identify the electrical distribution system which powers the following:
c. Emergency Bearing Oil Pump

Reference: SD-26.1

Cog Level: Low

Explanation:
The emergency bearing oil pump (EBOP) is provided to supply oil to the bearings of the main turbine when all ac power is lost. The EBOP is driven by a dc motor powered from 250 VDC 2(1)B. the 480 V busses E5-E8 are powered from the DGs so could provide emergency power.

Distractor Analysis:
Choice A: Plausible because it is an emergency pump which could be suplied from an emergency source and this source under emergency conditions does get power from the DG.

Choice B: Plausible because it is an emergency pump which could be suplied from an emergency source and this source under emergency conditions does get power from the DG.

Choice C: Plausible because it is an emergency pump which would be powered by a DC source and just not the 250 VDC Div I source.

Choice D: Correct answer, see explanation

Notes

Equipment	Power Supply
Motor suction pump (MSP)	480 VAC MCC 1(2) TM
Turning gear oil pump (TGOP)	480 VAC MCC 1(2) TM
Emergency Bearing Oil Pump (EBOP)	250 VDC SWGR 1(2)B
Vapor extractor	480 VAC MCC 1(2) TM

Categories

K/A:	263000 K2.01	Tier / Group:	T2G1
RO Rating:	3.1	SRO Rating:	3.4
LP Obj:	26.1-5C	Source:	BANK
Cog Level:	LOW	Category 8:	Y

31. Which one of the following predicts the response of the Lube Oil Temperature Control Valve (TCV) as DG3 load is increased?

Initially the DG3 Lube Oil temperatures to the heat exchanger will __(1)__ and the Lube Oil TCV will throttle __(2)__.

A.✓ (1) rise
(2) closed

B. (1) rise
(2) open

C. (1) lower
(2) closed

D. (1) lower
(2) open

Feedback

K/A: 264000 A1.01
Ability to predict and/or monitor changes in parameters associated with operating the EMERGENCY GENERATORS (DIESEL/JET) controls including:
Lube oil temperature
(CFR: 41.5 / 45.5)

RO/SRO Rating: 3.0/3.0

Objective: CLS-LP-18 Obj. 18

Reference: SD-39, OP-39

Cog Level: High (determining the effect on lube oil temperature and applying fundamentals to system knowledge)

Explanation:
Increasing load on the DG will cause more heat to be put into the lube oil as the DG does more work. The lube oil cooler bypasses oil to raise temperature of the oil. So in this case the TCV will have to close to allow more lube oil to go into the lube oil cooler.

Distractor Analysis:
Choice A: Correct answer, see explanation

Choice B: Plausible because temperatures will have to raise on the lube oil and if the TCV controlled the outlet of the oil it would have to open to cool the oil.

Choice C: Plausible because the TCV will throttle in the closed direction to allow less oil to bypass the cooler. More load correlates to more speed which would provide less for the oil to pick heat load thereby causing a temperature reduction.

Choice D: Plausible becasue if the TCV controlled the outlet of the oil it would have to open to cool the oil. More load correlates to more speed which would provide less for the oil to pick heat load thereby causing a temperature reduction..

Notes

closing the lube oil TCV lowers the temperature of the oil;

FIGURE 1

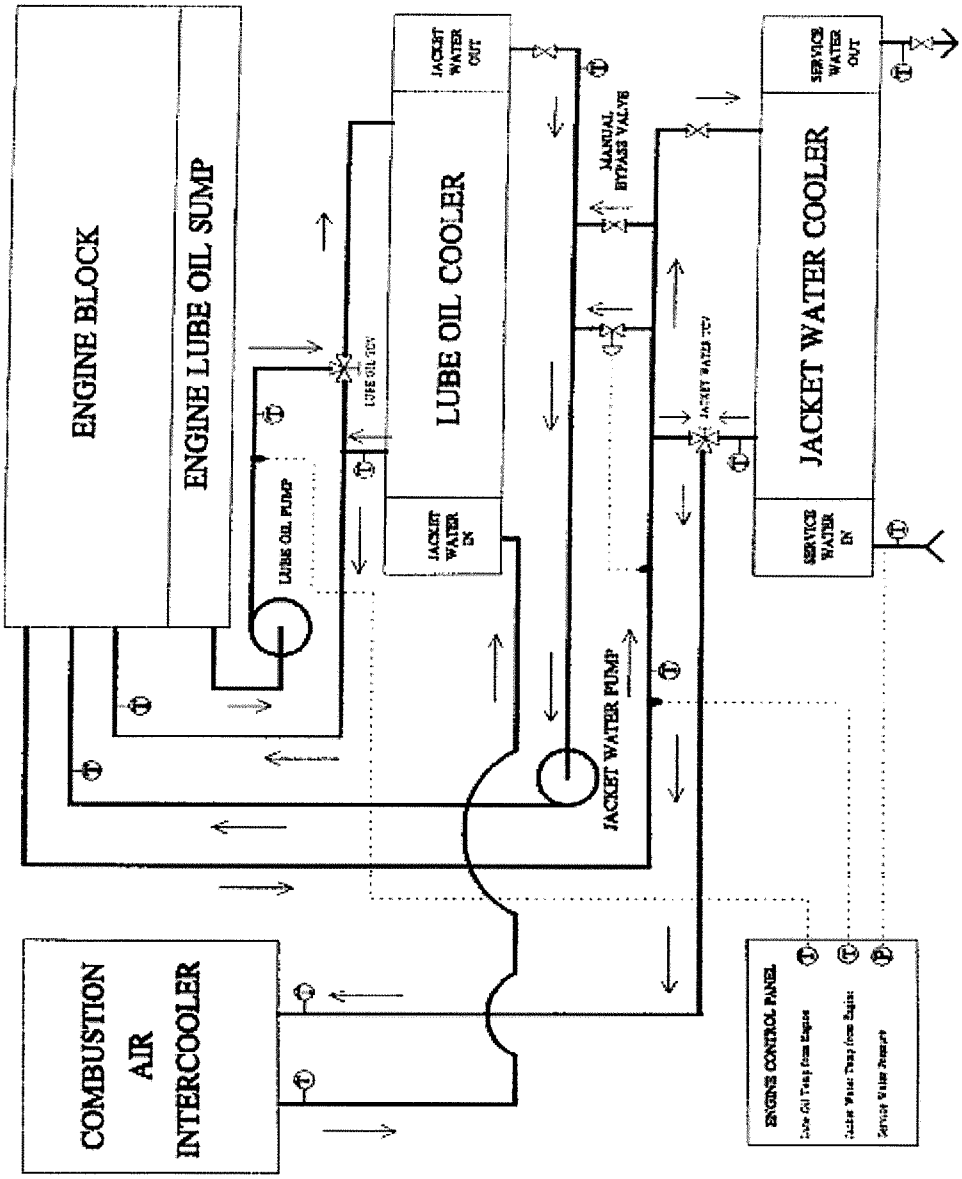

Categories

K/A:	264000 A1.01	Tier / Group:	T2G1
RO Rating:	3.0	SRO Rating:	3.0
LP Obj:	39-18	Source:	BANK
Cog Level:	HIGH	Category 8:	

32. During accident conditions on Unit Two the following sequence of events occur:

Time (seconds)	Event
0	Drywell pressure rises above the scram setpoint
2	Complete Loss of Off-site Power occurs
8	Reactor pressure is 400 psig
10	DGs energize their respective E Buses
15	Reactor water level drops below LL3

Which one of the following identifies the earliest time that the LPCI pumps will auto start?

A. 8 seconds

B. 15 seconds

C. 18 seconds

D✓ 20 seconds

Feedback

K/A: 264000 K1.07
Knowledge of the physical connections and/or cause effect relationships between EMERGENCY GENERATORS (DIESEL/JET) and the following:
Emergency core cooling systems
(CFR: 41.2 to 41.9 / 45.7 to 45.8)

RO/SRO Rating: 3.9/4.1

Objective: LOI-CLS-LP-17 Obj 07
Given plant conditions, determine if the RHR System should automatically initiate in the LPCI mode.

Reference: SD-17

Cog Level: High

Explanation:
The RHR System will automatically start in the LPCI mode of operation in response to either of two initiation signals: reactor vessel low level (LL 3) or drywell high pressure coincident with reactor vessel low pressure.
All RHR Pumps automatically start 10 seconds from receipt of the initiation signal if the Emergency busses are energized (off-site power available). If off-site power is not available, the pumps automatically start 10 seconds from the time the Emergency Diesel Generators re-energize the busses.

Distractor Analysis:
Choice A: Plausible because this is when the initiation signal is present from hi DW pressure and low reactor pressure.

Choice B: Plausible because this is when the initiation signal is present from LL3.

Choice C: Plausible because this is applying the 10 second time delay from when the initiation signal is present from hi DW pressure and low reactor pressure and would have started the pumps if electrical power was present.

Choice D: Correct answer, see explanation.

3.2.1 System Initiation

The RHR System will automatically start in the LPCI mode of operation in response to either of two initiation signals: reactor vessel low level (LL 3) or drywell high pressure coincident with reactor vessel low pressure. See Figure 17-8.

3.2.2 Response to LPCI Initiation Signal

Satisfying a system initiation signal from the LPCI logic will result in the following occurring for each loop:

- All RHR Pumps automatically start 10 seconds from receipt of the initiation signal if the Emergency busses are energized (off-site power available). If off-site power is not available, the pumps automatically start 10 seconds from the time the Emergency Diesel Generators re-energize the busses OR a total of 20 seconds from a loss of off-site power after a LOCA (Ref Fig 17-2C).

Categories

K/A:	264000 K1.07	Tier / Group:	T2G1
RO Rating:	3.9	SRO Rating:	4.1
LP Obj:	17-07	Source:	NEW
Cog Level:	HIGH	Category 8:	Y

33. Unit One is operating with the AOG system bypassed.
The AOG-HCV-102, AOG Bypass Valve, control switch is in Auto.

During performance of 0PT-04.1.7, Main Condenser Air Ejector Radiation Monitor Functional Test, the operator places the A SJAE Rad Monitor NUMAC drawer (D12-RM-K601A/B) INOP/OPER keylock switches to the INOP position.

The B SJAE Rad Monitor then loses power.

Which one of the following identifies the effect that the above conditions will have on the AOG Bypass Valve?

A. closes immediately

B.✓ closes after a time delay

C. remains open irrespective of actual radiation conditions

D. remains open but will close on an actual hi-hi radiation condition

Feedback

K/A: 272000 K3.05
Knowledge of the effect that a loss or malfunction of the RADIATION MONITORING System will have on following:
Offgas system
(CFR: 41.5 / 45.3)

RO/SRO Rating: 3.5/3.7

Objective: CLS-LP-11.0 Obj 5c
Explain the effect that a loss/malfunction of the PRM System will have on the following:
c. AOG System

Reference: 0PT-04.1.7

Cog Level: High

Explanation:
The permissive logic is completed when either a high-high, a downscale, or an INOP trip occur simultaneously in Channels A and B. When the logic is satisfied, Timer D12-M001 energizes to furnish the proper input signal to the off-gas-to-stack isolation valve after the predetermined delay interval and *PROCESS OFF-GAS TIMER INITIATED* annunciator on Panel XU-3 will actuate.

Distractor Analysis:
Choice A: Plausible because the logic is made up (Inop from both A and B logics) but is incorrect because of the time delay.

Choice B: Correct answer, see explanation.

Choice C: Plausible because the PT does use a trip test function. This is used to put in a false signal to make sure the instruments logic work correctly. The examinee might think that this would override all signals to the valve.

Choice D: Plausible because the PT does use a trip test function. This is used to put in a false signal to make sure the instruments logic work correctly. Therefore the examinee could reason that it would not operate for the invalid signal

Notes

3.2 The off-gas timer must be reset within ten minutes of initiation or a loss of off-gas flow and subsequent loss of main condenser vacuum will occur if the AOG System is bypassed.

0PT-04.1.7	Rev. 32	Page 2 of 18

CAUTION

IF the *PROCESS OG TIMER INITIATED* (UA-03 4-1) initiation device is **NOT** reset within ten minutes, an isolation will occur if the AOG System is bypassed.

from the sd:

Signals from the upscale (high-high), downscale, and INOP trip circuits of the log rad monitors are applied to the holdup valve control logic circuits. The Air Ejector Off-Gas Radiation Monitoring System will cause the holdup outlet valve control relay to deenergize when any combination of trips occur simultaneously in both channels. The energized valve control timer provides the appropriate input to the isolation valve, causing it to close following the delay interval. The log radiation monitor also drives four trip circuits which actuate annunciators, initiates the off-gas timer which, after 15 minutes, initiates closure of 1(2)AOG-HCV-102

Categories

K/A:	272000 K3.05	Tier / Group:	T2G2
RO Rating:	3.5	SRO Rating:	3.7
LP Obj:	11.0-5C	Source:	BANK
Cog Level:	HIGH	Category 8:	Y

34. Given the following plant conditions after a Loss of Off-Site Power to Unit One:

DG1	Running at 3575 KW load
DG2	Running at 3680 KW load
RB HVAC	Isolated

The operator is directed to restart Reactor Building HVAC using three (3) supply fans (75 KW each) and three (3) exhaust fans (45 KW each).

Which one of the following identifies the impact of starting two supply and two exhaust fans from MCC 1XG and one supply and one exhaust fan from MCC 1XH on DG maximum loading?

A. DG1 only maximum load will be exceeded.

B. DG2 only maximum load will be exceeded.

C. DG1 and DG2 maximum load will be exceeded.

D. DG1 and DG2 will remain within maximum load limits.

Feedback

K/A: 288000 K1.04
Knowledge of the physical connections and/or cause effect relationships between PLANT VENTILATION SYSTEMS and the following:
AC Electrical
(CFR: 41.2 to 41.9 / 45.7 to 45.8)

RO/SRO Rating: 2.6/2.6

Objective: CLS-LP-39 Obj. 17a
Given plant conditions, OP-39, OP-50.1, AOP-36.2, and/or ASSD procedures, determine the limits for the following DG parameters:
a. Generator kW.

Reference: AOP-36.1

Cog Level: High

Explanation:
Max loading during LOOP is 110% of rated (3500KW x 110% = 3850KW). 2 sets from MCC 1XG (DG1) adds 240 kw for total of 3815 KW. 1 set from MCC 1XH (DG2) adds 120 KW for total of 3800 KW.

Distractor Analysis:
Choice A: Plausible if the examinee adds the wrong values for the fans, supply vs exhaust, then this answer would be correct.

Choice B: Plausible if the examinee thinks that 1XG is from DG2, then this answer would be correct.

Choice C: Plausible if the examinee considers the rated value instead of the emergency value for the answer.

Choice D: correct answer, see explanation.

Notes

CAUTION

If a diesel generator failure has occurred, power restrictions may prevent restarting all systems required by this section of the procedure. The Unit SCO must use discretion in determining what equipment to restart depending on existing plant conditions. Maximum diesel generator loading is 3850 KW.

MCC 1XE (130 KW)		MCC 1XF (85 KW)	
RBCCW Pump 1A	48	RBCCW Pump 1B	48
RBCCW Pump 1C	48	RWCU Pump 1B	38
RWCU Pump 1A	38	SBGT Train 1B	28
SBGT Train 1A	28		
		MCC 1XH (190 KW)	
MCC 1XG (330 KW)		Fuel Pool Cool Pump 1B	50
Fuel Pool Cool Pump 1A	50	SLC Pump 1B	30
SLC Pump 1A	30	Purge Exh Fan 1B	38
Purge Exh Fan 1A	38	RB Vent Sup Fan 1B	75
RB Vent Sup Fan 1A	75	RB Vent Exh Fan 1B	45
RB Vent Exh Fan 1A	45	RB Vent Sup Fan 1D	75
RB Vent Sup Fan 1C	75	RB Vent Exh Fan 1D	45
RB Vent Exh Fan 1C	45	SLC Storage Tank Heater B	40

Categories

K/A:	288000 K1.01	Tier / Group:	T2G2
RO Rating:	2.6	SRO Rating:	2.6
LP Obj:	39-17A	Source:	BANK
Cog Level:	HIGH	Category 8:	Y

35. Unit Two is performing a startup after refueling when a leak occurs on the reactor head inner seal o-ring.

Which one of the following identifies the expected alarm due to this condition?

A. *SEAL LEAKAGE FLOW DETECTION HI*

B. *DRYWELL FLR DR SUMP LVL HI*

C✓ *RPV FLANGE SEAL LEAK*

D. *PRI CTMT HI/LO PRESS*

Feedback

K/A: 290002 G2.04.46
Ability to verify that the alarms are consistent with the plant conditions.
Reactor Vessel Internals
(CFR: 41.10 / 43.5 / 45.3 / 45.12)

RO/SRO Rating: 4.2/4.2

Objective: CLS-LP-01 Obj 3
Describe the plant conditions that could cause RPV Flange Seal Leak (Annunciator A-02, window 5-6) to annunciate.

Reference: SD-01.2

Cog Level: High

Explanation: The head to vessel flange seal is made up by two concentric o-rings that are installed in grooves. A drilled passage connects the annulus between the two o-rings to a pressure switch. If the pressure rises to 600 psig due to the inner o-ring leaking, an annunciator, A-02 5-6 RPV FLANGE SEAL LEAK, will alarm by the pressure switch closing. Failure of both flange seals is detected by the primary containment leak detection system.

Distractor Analysis:
Choice A: Plausible because this alarm is for a seal leak, but it is for a Recirc Pump seal leak.

Choice B: Plausible because this would be the condition if there was a failure of both o-rings.

Choice C: Correct answer, see explanation

Choice D: Plausible because this would be a condition of a failure of both o-rings.

Notes

3.7 Vessel Head Flange Leak Detection

The head to vessel flange seal is made up by two concentric o-rings that are installed in grooves. A drilled passage connects the annulus between the two o-rings to a pressure switch. If the pressure rises to 600 psig due to the inner o-ring leaking, an annunciator, A-02 5-6 RPV FLANGE SEAL LEAK, will alarm by the pressure switch closing. Failure of both flange seals is detected by the primary containment leak detection system. Figure 01.2-9 shows the vessel head flange leak detection system. The grooves for the O-rings are only located in the head.

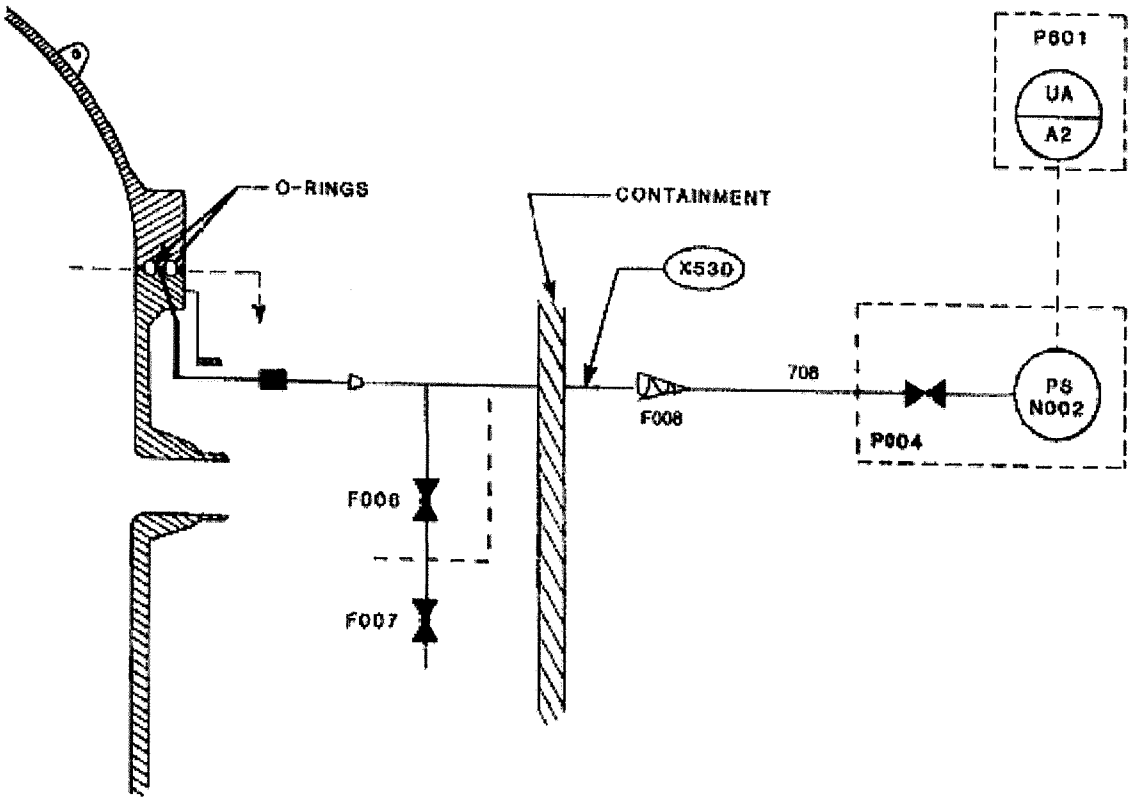

Categories

K/A:	290002 G2.04.46	Tier / Group:	T2G2
RO Rating:	4.2	SRO Rating:	4.2
LP Obj:	01-3	Source:	NEW
Cog Level:	LOW	Category 8:	

36. Which one of the following alarm conditions auto start the CREV System?

A. *PROCESS RX BLDG VENT RAD HI-HI*

B. *AREA RAD RADWASTE BLDG HIGH*

C. *REACTOR VESS LO LEVEL TRIP*

D. *PRI CTMT PRESS HI TRIP*

Feedback

K/A: 290003 K4.01
Knowledge of CONTROL ROOM HVAC design feature(s) and/or interlocks which provide for the following:
System initiations/reconfiguration: Plant-Specific
(CFR: 41.7)

RO/SRO Rating: 3.1/3.2

Objective: CLS-LP-37 Obj. 4a
Given plant conditions determine if signals exist that would cause the following to automatically start/open:
a. Emergency Recirculation Fans

Reference:
SD-37

Cog Level: low

Explanation:
An automatic start signal is initiated by any of the following:
a. Any one of three Area Radiation Monitors
(1) Control Room (Channel 1) 1 mr/hr ± .05mr increasing
(2) Control Building Ventilation Intake (Channel 2 or 3) 7 mr/hr ±.05mr increasing

b. LOCA Signal detected by one of the following:
(1) Reactor Water Low Level 2
(2) Drywell Pressure - High

Distractor Analysis:
Choice A: Plausible because the LOCA signal comes from the same device that initiates the Group 6 isolation and this is an input into the Group 6 isolation logic.

Choice B: Plausible because radwaste is located below the main control room and control room rad signals do initiate CREV.

Choice C: Plausible since this is a low level scram setpoint and not the LL2 signal that would initiate CREV.

Choice D: Correct answer, see explanation

Notes

1. An automatic start signal is initiated by any of the following:

   a. Any one of three Area Radiation Monitors

      (1) Control Room (Channel 1) 1 mr/hr ± .05mr increasing
      (2) Control Building Ventilation Intake (Channel 2 or 3) 7 mr/hr ± .05mr increasing

   b. LOCA Signal detected by one of the following:

      (1) Reactor Water Low Level 2
      (2) Drywell Pressure - High

Categories

K/A:	290003 K4.01	Tier / Group:	T2G2
RO Rating:	3.1	SRO Rating:	3.2
LP Obj:	37-4A	Source:	NEW
Cog Level:	LOW	Category 8:	Y

37. Which one of the following correctly completes the statement below?

A single recirculation pump trip from rated power will cause the value of Critical Power to __(1)__ and the Critical Power Ratio will be __(2)__.

A. (1) rise
   (2) higher

B. (1) rise
   (2) lower

C. (1) lower
   (2) higher

D. (1) lower
   (2) lower

Feedback

K/A: 295001 K1.03
Knowledge of the operational implications of the following concepts as they apply to PARTIAL OR COMPLETE LOSS OF FORCED CORE FLOW CIRCULATION :
Thermal limits
(CFR: 41.8 to 41.10)

RO/SRO Rating: 3.6/4.1

Objective: CLS-LP-106-A*13B
Describe how a change in each of the following affects critical power: Mass flow rate

Reference:
1(2)OP-, Revision , Page , Section
OPS-FUN-LP-104-I (Thermal Limits)
LOI-CLS-LP-106-A

Cog Level: low

Explanation:
As actual power goes down, void fraction increases. This causes critical power to lower, although not as significantly as actual power. Since actual power drops further than critical power, the Critical Power Ratio gets larger.
CPR = CP / AP

Distractor Analysis:

Choice A: Plausible because Part (1) is incorrect. As actual power goes down, void fraction increases. This causes critical power to lower, although not as significantly as actual power. Part (2) is correct. Since actual power drops further than critical power, the Critical Power Ratio gets larger.

Choice B: Plausible because Part (1) is incorrect. As actual power goes down, void fraction increases. This causes critical power to lower, although not as significantly as actual power. Part (2) is incorrect as stated in (a) above.

Choice C: Correct Answer

Choice D: Plausible because Part (1) is correct. As the actual power goes down, the power required to cause the onset of transition boiling also goes down. Part (2) is incorrect. Although actual power goes down and critical power goes down, the power required to cause the onset of transition boiling does NOT go down as far as actual power due to the higher void fraction. Therefore, the Critical Power Ratio rises.

SRO Only Basis: N/A

Notes

On Figure 9-7, the center curve is the "critical power" (heat balance) curve and it becomes tangent to (just touches) the "GEXL correlation" curve near the channel exit. This implies that for this condition, OTB occurs near the top of the fuel bundle. For other flow rates or axial power shapes, the critical bundle power may be higher or lower, and OTB may take place at a different boiling length. The important thing to remember is that *any* bundle power curve that touches the GEXL curve represents the critical power for that condition.

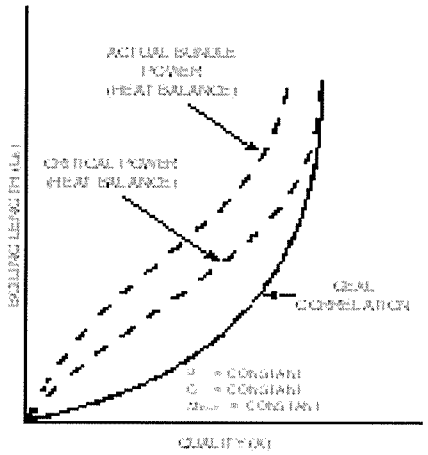

Figure 9-7 GEXL Correlation and BWR Heat Balance Curves

The ratio of the critical power to some operating power, like the one in Figure 9-7, is the *critical power ratio* (CPR).

$$CPR = \frac{CP}{AP} > 1.0$$

Where:

CPR	=	critical power ratio
CP	=	bundle power at which OTB occurs
AP	=	actual bundle power

Equation 9-15

When the actual bundle power equals the critical power, CPR is equal to 1.0. For operating powers less than the critical power, CPR is greater than 1.0. The CPR must always be greater than 1.0 to avoid OTB. The minimum value that the CPR can have anywhere in the core (MCPR) is specified as an LCO in Technical Specifications. The LCO for MCPR is based on maintaining the MCPR greater than 1.07 for any analyzed operating transient, as shown in Figure 9-8. Remember that a MCPR greater than 1.0 ensures that OTB does not take place. OTB causes rapid thermal cycling of the cladding and may lead to film boiling, which results in unacceptable cladding and fuel temperatures.

Table 9-1 Factors Affecting Critical Power

FACTOR	CRITICAL POWER	BUNDLE POWER	CPR
INLET SUBCOOLING:			
INCREASES	↑	↑	↓
DECREASES	↓	↓	↑
MASS FLOW RATE:			
INCREASES	↑	↑	↓
DECREASES	↓	↓	↑
PRESSURE:			
INCREASES	↓	↑	↓
DECREASES	↑	↓	↑
LOCAL PEAKING FACTOR			
INCREASES	↓	↔	↓
DECREASES	↑	↔	↑
AXIAL POWER DISTRIBUTION			
INCREASES	↓	↔	↓
DECREASES	↑	↔	↑

STEADY STATE AND TRANSIENT

The primary design objective is to maintain nucleate boiling and avoid OTB. The CPR thermal limit is set to maintain adequate margin between nucleate boiling and OTB. The steady state and transient MCPR thermal limits are derived from this single design basis requirement.

Transients caused by single operator error or equipment malfunction shall be limited so that, considering uncertainties in monitoring the core operating state, more than 99.9% of the fuel rods are expected to avoid OTB.

The transients most likely to limit operation because of MCPR considerations are:

- Turbine trips or generator load rejections without bypass valve capability
- Loss of feedwater heating or inadvertent high pressure coolant injection
- Feedwater controller failure (maximum demand)

MAXIMUM FRACTION OF LIMITING CRITICAL POWER RATIO (MFLCPR)

The process computer calculates CPR data evaluating core conditions to ensure limits are not exceeded. One of the most useful forms of this data output is a ratio called the "fraction of limiting critical power ratio" (FLCPR). This ratio compares the flow-adjusted operating (steady-state) maximum CPR for the fuel bundle to the actual bundle CPR. From this, the maximum fraction of limiting critical power ratio (MFLCPR - pronounced "miffle-sipper"), which is the maximum fraction of limiting critical power ratio (MFLCPR) and is the ratio of the flow-adjusted CPR operating limit for that fuel type to the bundle CPR, is developed. For most nuclear plants the MFLCPR ratio takes the following form:

$$\text{MFLCPR} = \frac{\text{CPR}_{\ldots} \times \text{K}_{\ldots}}{\text{CPR}}$$

Equation 9-16

BASES

APPLICABLE SAFETY ANALYSES (continued)

For AREVA fuel, the COLR presents single loop operation APLHGR limits in the form of a multiplier that is applied to the two loop operation APLHGR limits.

The transient analyses of Chapter 15 of the UFSAR have also been evaluated for single recirculation loop operation. The evaluation concludes that results of the transient analyses are not significantly affected by the single recirculation loop operation. There is, however, an impact on the fuel cladding integrity SL since some of the uncertainties for the parameters used in the critical power determination are higher in single loop operation. The net result is an increase in the MCPR operating limit.

During single recirculation loop operation, modification to the Reactor Protection System (RPS) average power range monitor (APRM) Simulated Thermal Power—High Allowable Value is required to account for the different analyzed limits between two-recirculation drive flow loop operation and operation with only one loop. The APRM channel subtracts the ΔW value from the measured recirculation drive flow to effectively shift the limits and uses the adjusted recirculation drive flow value to determine the APRM Simulated Thermal Power—High Function trip setpoint.

Recirculation loops operating satisfies Criterion 2 of 10 CFR 50.36(c)(2)(ii) (Ref. 4).

LCO

Two recirculation loops are normally required to be in operation with their flows matched within the limits specified in SR 3.4.1.1 to ensure that that during a LOCA caused by a break of the piping of one recirculation loop the assumptions of the LOCA analysis are satisfied. Alternately, with only one recirculation loop in operation, modifications to the required APLHGR limits (LCO 3.2.1, "AVERAGE PLANAR LINEAR HEAT GENERATION RATE (APLHGR)"), MCPR limits (LCO 3.2.2, "MINIMUM CRITICAL POWER RATIO (MCPR)"), LHGR limits (LCO 3.2.3, "LINEAR HEAT GENERATION RATE (LHGR)"), and APRM Simulated Thermal Power—High Allowable Value (LCO 3.3.1.1), as applicable, must be applied to allow continued operation. The COLR defines adjustments or modifications required for the APLHGR, MCPR, and LHGR limits for the current operating cycle.

(continued)

The RPT breakers are located on the 20' elevation of the Reactor Building and are between the reactor recirculation M-G Sets and the Recirculation Pumps. The main turbine first stage permissive is equivalent to 26% rated thermal power. EOC-RPT is automatically bypassed below 26% rated thermal power. The stop valve position and control valve fast closure control oil pressure switches are the same signals used to initiate a reactor scram. The circuitry is removed from service by placing the keylock switches, RPT SYS A (B) OUT OF SVC, on Panel H12-P609 and H12-P611 in the INOP position.

With EOC-RPT not in service, penalties are imposed in the calculations of the MCPR limits in the Core Operating Limits Report. Also, the Tech Spec MCPR LCO Option B, which allows operation closer to the MCPR safety limit, must take into account the average scram time of the control rods.

The control power fuses for the RPT breakers have been removed to prevent them from opening and the trip and permissive interlocks with the MG set breakers have been bypassed. This was performed to prevent a failure of the interlock relay from tripping the MG set.

Categories

K/A:	295001 K1.03	Tier / Group:	T1G1
RO Rating:	3.6	SRO Rating:	4.1
LP Obj:	CLS-LP-106-A*13B	Source:	BANK
Cog Level:	LOW	Category 8:	Y

38. Both Units were operating at rated power when ALL switchyard PCB position indications turn green.

Diesel Generator status:

DG1	Running loaded
DG2	Running loaded
DG3	Under clearance
DG4	Tripped on low lube oil pressure

Which one of the following identifies the AOP(s) that Unit One and Unit Two are required to perform?

Unit One is required to perform __(1)__.
Unit Two is required to perform __(2)__.

A. (1) 0AOP-36.1, Loss of Any 4160V Buses or 480V E-Buses
(2) 0AOP-36.1, Loss of Any 4160V Buses or 480V E-Buses

B. (1) 0AOP-36.1, Loss of Any 4160V Buses or 480V E-Buses
(2) 0AOP-36.2, Station Blackout

C. (1) 0AOP-36.2, Station Blackout
(2) 0AOP-36.1, Loss of Any 4160V Buses or 480V E-Buses

D. (1) 0AOP-36.2, Station Blackout
(2) 0AOP-36.2, Station Blackout

Feedback

K/A: 295003 A2.05
Ability to determine and/or interpret the following as they apply to PARTIAL OR COMPLETE LOSS OF A.C. POWER :
Whether a partial or complete loss of A.C. power has occurred
(CFR: 41.10 / 43.5 / 45.13)

RO/SRO Rating: 3.9/4.2

Objective: LOI-CLS-LP-303-A*001
Given plant conditions and control room indications, determine if AOP 36.2, Station Blackout Procedure, should be entered.

Reference:
0AOP-36.2, Revision 41, Page 4, Section 3.2.1

Cog Level: High

Explanation: This meets the KA because the student will have to determine that all green lights is a LOOP on BOTH Units. Then determine that Unit two is under SBO conditions and apply this to the AOP entry conditions.

Switchyard PCB green position indication shows all PCB are OPEN, which indicates Loss of ALL offsite power. Unit 2 is the only blacked out unit, but both units must enter station blackout procedure.
RO must recognize LOOP and SBO on U2.

Distractor Analysis:
Choice A: Plausible because all PCBs open is a Loss of Offsite Power (LOOP) requiring entry into AOP-36.1. LOOP recognized without SBO on U2.

Choice B: Plausible because all PCBs open is a Loss of Offsite Power (LOOP) requiring entry into AOP-36.1. No DGs running on Unit 2 requires SBO AOP entry on both units.

Choice C: Plausible because not knowing Loss of Offsite Power (LOOP) actions are contained in AOP-36.1. Second part is correct.

Choice D: Correct Answer

SRO Only Basis: N/A

Notes

1.0 SYMPTOMS

1.1 SAT deenergized

1.2 Buses B, C, and D undervoltage

1.3 Bus E1 and E2 (E3 and E4) undervoltage

1.4 No diesel generators running and loaded on one or both units

2.0 AUTOMATIC ACTIONS

2.1 Reactor scram

2.2 Groups 1, 2, 6, and 10 isolate

2.3 Groups 3 and 8 isolate with the DC powered outboard isolation valves only.

2.4 Reactor Building HVAC trips, but does **NOT** isolate until power is available to the damper solenoid valves.

2.5 The following DC oil pumps start on low header pressure:

- RFPTs
- Reactor Recirc M-G Sets
- Main Turbine
- Hydrogen Seal Oil

3.2 Supplementary Actions

3.2.1 Station Blackout Actions

NOTE:	Priorities are to restore AC power to the blacked out unit battery chargers by cross-tie of E buses, alignment of SAMA diesels, or UAT backfeed.

1. **IF** any diesel generator is started and loaded on the blacked out unit, **THEN EXIT** this procedure. ☐

2. **ENTER** the applicable Supplementary Action Section indicated in Table 1, **AND EXECUTE** concurrently with this section. ☐

Table 1

BLACKOUT UNIT	UNIT 1	UNIT 1	UNIT 2	UNIT 2	UNIT 1
SITE PWR AVAILABILITY	NONE	NONE	NONE	NONE	NONE
DIESELS OPERATING	ONLY DG3	ONLY DG4	ONLY DG1	ONLY DG2	DG3 & DG4
SUPPL. ACTIONS SECTION	ENTER SECT 3.2.2 (Page 6)	ENTER SECT 3.2.3 (Page 13)	ENTER SECT 3.2.4 (Page 20)	ENTER SECT 3.2.5 (Page 27)	ENTER SECT 3.2.6 (Page 34)

BLACKOUT UNIT	UNIT 2	UNIT 1	UNIT 2	UNIT 1 & 2
SITE PWR AVAILABILITY	NONE	ONLY SAT #2	ONLY SAT #1	NONE
DIESELS OPERATING	DG1 & DG2	VARIABLE	VARIABLE	NONE
SUPPL. ACTIONS SECTION	ENTER SECT 3.2.7 (Page 42)	ENTER SECT 3.2.8 (Page 50)	ENTER SECT 3.2.9 (Page 54)	ENTER SECT 3.2.10 (Page 58)

3.2.1 Station Blackout Actions

NOTE:	Unit 1 and 2 Critical Instruments and Components are listed in Attachment 1 (page 178) and Attachment 2 (page 182), respectively.

3. **NOTIFY** the other Unit SCO to enter this procedure. ☐

4. **NOTIFY** the System Dispatcher Unit 1(2) is in Station Blackout. ☐

5. **NOTIFY** Security to take the actions necessary for a Station Blackout. ☐

6. **IF** the SAT was lost due to a fault and is unavailable, **AND** the switchyard is energized, **THEN ESTABLISH** UAT Backfeed in accordance with 1(2)OP-50, **AND PERFORM CONCURRENTLY** with this procedure. ☐

7. **IF** the SAT was lost due to loss of power on the Progress Energy System, **THEN PERFORM** the following:

   a. **PLACE** *AUTO RECLOSE* switches in *MANUAL*. ☐

   b. **PLACE** transmission line PCB *SUPERVISORY LOCAL/REMOTE* switches in *LOCAL*. ☐

   c. **TRIP** all transmission line PCBs. ☐

1.0 SYMPTOMS

1.1 Loss of Off-site Power

1.1.1 SAT de-energized

1.1.2 Buses B, C, and D undervoltage

1.1.3 Indication of all four diesel generators running

1.2 Loss of E Bus

1.2.1 One 4160V or 480V E Bus undervoltage

1.2.2 Loss of one RPS bus (half-Scram signal)

1.2.3 Partial loss of instrumentation powered from Emergency 120 VAC

1.2.4 Indication of one diesel generator running

1.3 Loss of One BOP Bus

1.3.1 One 4160V BOP bus undervoltage

1.3.2 Reactor recirculation pump trip

1.3.3 Indication of one or two diesel generators running

2.0 AUTOMATIC ACTIONS

2.1 Loss of Off-site Power

2.1.1 Reactor scram. ☐

2.1.2 Groups 1, 2, 3, 6, 8, and 10 Isolate. ☐

2.1.3 All four diesel generators start. ☐

2.1.4 Reactor Building HVAC Isolates. ☐

2.1.5 Standby Gas Treatment initiates. ☐

2.1.6 CREV starts ☐

2.1.7 Hydrogen Water Chemistry Isolates ☐

2.1.8 SW-V103 and SW-V106 Auto close ☐

R1 **3.0 OPERATOR ACTIONS**

3.1 Immediate Actions

None

3.2 Supplementary Actions

3.2.1 Actions Determination

1. **IF** at any time during the performance of this procedure, all AC power is lost to either unit, **THEN** both units **GO TO** 0AOP-36.2. ☐

NOTE:	Sections 3.2.2 through 3.2.10 provide recovery actions for loss of power to BOP and Emergency buses. The sequence for equipment restoration will be dependent upon the status of the plant at the time of the power failure. Therefore, steps within these sections may be performed simultaneously or in any order necessary, as prioritized by the Unit SCO.

2. **IF** at any time during the performance of this procedure a Loss of Off-site Power occurs **OR** a simultaneous loss of both 1(2) C and 1(2) D BOP busses, **THEN PERFORM** Section 3.2.2 (Page 6) concurrently with this section. ☐

NOTE:	Attachments 1 (Unit 1) and 2 (Unit 2) contain a listing of critical instrumentation and the associated power supply.

3. **IF** at any time during the performance of this procedure, any E bus undervoltage occurs, **AND** the associated diesel generator starts and lies to the bus, **THEN PERFORM** the following:

   a. **IF** necessary, **THEN ADJUST** bus voltage and frequency as follows:

      - Bus Voltage 4100 to 4200 V ☐
      - Bus Frequency: 59.8 to 60.2 Hz ☐

   b. Monitor local indications in accordance with 0OP-39 Section 6.0. ☐

Categories

K/A:	295003 A2.05	Tier / Group:	T1G1
RO Rating:	3.9	SRO Rating:	4.2
LP Obj:	LOI-CLS-LP-303-A*001	Source:	NEW
Cog Level:	HIGH	Category 8:	

39. Following a loss of feedwater on Unit Two, HPCI and RCIC are being used to restore Reactor water level to the normal band.

The RO observes the following alarm and indications:

250V BATT A UNDERVOLTAGE	in Alarm
Battery Bus 2A-1 Voltage	0 Volts (XU-2)
Battery Bus 2A-2 Voltage	0 Volts (XU-2)
Battery Bus 2A-1 Voltage	0 Volts (ERFIS)
Battery Bus 2A-2 Voltage	0 Volts (ERFIS)

Which one of the following correctly completes the statement below due to the conditions above?

__(1)__ continues to operate and __(2)__ on high RPV level.

A. (1) HPCI
(2) will trip

B. (1) HPCI
(2) will not trip

C. (1) RCIC
(2) will shutdown

D. (1) RCIC
(2) will not shutdown

Feedback

K/A: 295004 A1.02
Ability to operate and/or monitor the following as they apply to PARTIAL OR COMPLETE LOSS OF D.C. POWER :
Systems necessary to assure safe plant shutdown
(CFR: 41.7 / 45.6)

RO/SRO Rating: 3.8/4.1

Objective: CLS-LP-19*26B & CLS-LP-16*15E
Given plant conditions and one of the following events, use plant procedures to determine the actions required to control and/or mitigate the consequences of the event:Loss of DC power
Given plant conditions, predict the RCIC System response to the following conditions:DC power failure

Reference:
1(2)OP-, Revision , Page , Section

Cog Level: High

Explanation:
Division I DC is required for HPCI start and operation. A loss of Division I DC will make the RCIC inboard isolation logic inoperable which results in failure of the steam supply valve closure on high vessel level. A loss of Div II DC would make RCIC fail and allows for HPCI vessel high water level trip logic to be partially made up (one out of two).

Distractor Analysis:
Choice A: Plausible because HPCI and RCIC are impacted by a loss of either Division of DC. A loss of Div II DC will allow HPCI to continue to operate and will trip on high vessel water level. RCIC flow would be lost on loss of Div II DC.

Choice B: Plausible because HPCI and RCIC are impacted by a loss of either Division of DC. A loss of Div II DC will allow HPCI to continue to operate and will trip on high vessel water level. RCIC flow would be lost on loss of Div II DC.

Choice C: Plausible because HPCI and RCIC are impacted by a loss of either Division of DC. RCIC would continue to inject but would **not** trip on high vessel water level with a loss of Div I DC. HPCI flow would be lost.

Choice D: Correct Answer

SRO Only Basis: N/A

Notes

Plant Effects from Loss of DC Panel 3A(4A)

RCIC: Will not shutdown on reactor high water level, inboard isolation logic inoperable (E51-F007, -F031, and -F062 will not auto close). Valves E51-F005 and -F025 fail closed.

ADS: ADS Logic B is inoperable. ADS will initiate from ADS Logic A if Core Spray Pump B or both RHR Loop B pumps are running.

HPCI: Will not auto initiate, outboard isolation logic inoperable (E41-F003, -F041, and -F075 will not auto close), HPCI flow controller and EGM inoperable (no flow control or indication), HPCI trip logic inoperable, valves E41-F053, -F054, and -F026 fail closed.

A Core Spray: Will not auto initiate (manual operation possible but minimum flow valve will not auto open, and injection valves can not be opened simultaneously).

2.0 AUTOMATIC ACTIONS

2.1 Loss of Division I DC Power from Switchboard 1A(2A):

- Half scram signal
- Group 1 Isolation closing inboard MSIV's only, resulting in a reactor scram if the Mode Switch is in *RUN*
- **IF** operating, **THEN** a loss of DG1(DG3)
- **IF** operating, **THEN** a failure of HPCI

2.2 Loss of Division II DC Power from Switchboard 1B(2B):

- Half scram signal
- Group 1 Isolation closing outboard MSIV's only, resulting in a reactor scram if the Mode Switch is in *RUN*
- **IF** operating, **THEN** a loss of DG2(DG4)
- **IF** operating, **THEN** a failure of RCIC

PANEL: 3B Reference Drawing: LL-30024-7	LOCATION Control Building 49 ft North	NORMAL SUPPLY Switchboard 1B	ALTERNATE SUPPY N/A

Ckt.#	LOAD	EFFECT
3	Div II RHR Logic	1. RHR Div II Initiation Logic inop, B Loop RHR will auto initiate from Div I RHR logic, including the E11-F015B opening. 2. E11-F015B will not auto close on a group 8 signal and the E11-F015B cannot be manually opened from RTGB. 3. Div II Spray Logic inop 4. LOCA Lockout / initiation does not function for the following: • RHR SW Booster pumps B&D • E11-F049B, E11-F017B, E11-F026B, E11-F016B, • E11-F027B, E11-F026B, E11-F024B, E11-F011BA • E11-F015B can be stroked closed from the RTGB 5. E11-F053B fails closed. 6. E11-F068B does not auto close with associated pumps secured. 7. E11-F007B does not auto open 8. Div II RHR pump suction trips do not function. 9. B&D RHR Pump inputs to ADS A Logic are inop. 10. Recirc valves B32-F032B & B32-F031B auto closure logic inop, valves will still auto close on a LOCA concurrent with a low-pressure signal from Div. I logic. 11. Receive annunciator A3-2-7
	HPCI Div II Isolation Logic	1. HPCI Div II Isolation valves will not auto close. F002, F042, and F079. 2. Receive annunciator A1-6-5
	HPCI DIV II High Level Trip	1. Div II high level trip seals in on a loss of power. 2. High level trip will still function
	HPCI Div II Low Level 2 Initiation	1. Div II Low Level 2 initiation logic inop, HPCI can still initiate from Div I logic.
	RCIC Div II Initiation Logic	1. RCIC Low Level 2 initiation logic inop, RCIC can still initiate from Div I logic.

250V BATT A UNDERVOLTAGE

AUTO ACTIONS

NONE

CAUSE

1. Ground on Battery Bus 2A-1(2A-2).
2. Excessive load on Battery Bus 2A-1(2A-2).
3. Low DC output voltage from Battery Charger 2A-1(2A-2).
4. Battery Charger 2A-1(2A-2) AC input breaker tripped.
5. Circuit malfunction.

OBSERVATIONS

1. Local ammeter on battery ground detector unit is indicating greater than 3.0 milliamps.
2. Battery Bus 2A-1(2A-2) voltage as read on BAT-VM-737(739) on RTGB Panel XU-1 is less than the normal range of 130 to 140V DC.
3. Battery Charger 2A-1(2A-2) DC output voltage as read locally on BAT-VM-6009(6010) is less than the normal range of 130 to 140V DC.
4. Battery Charger 2A-1(2A-2) DC output current as read locally on BAT-VM-6000(6001) is reading more or less than the normal range of 10 to 50 amps.
5. Battery Charger 2A-1(2A-2) AC Input Breaker, Compartment CO5(CO6) on MCC 2CA, is in the OFF or TRIP position.

ACTIONS

1. Determine which battery bus caused the annunciator.
2. If the cause of the annunciator is a ground, perform the DC ground isolation procedure per OP-51, DC Electrical System.
3. If the cause of the annunciator is excessive load, reduce all unnecessary loads on Battery Bus 2A-1(2A-2).

Categories

K/A:	295004 A1.02	Tier / Group:	T1G1
RO Rating:	3.8	SRO Rating:	4.1
LP Obj:	CLS-LP-16*15E	Source:	BANK
Cog Level:	HIGH	Category 8:	Y

40. Unit One is operating at rated power with DG1 running loaded for a monthly load test. A fault trips the Main Generator Primary Lockout relay.

BOP Bus 1C fails to transfer on the generator lockout due to failure of the SAT supply breaker to close.

Which one of the following identifies the status of the E1 Bus that would be reported to the CRS?

E1 is energized from:

A. DG1 with off-site power available.

B. both DG1 and from off-site power.

C. DG1 with off-site power unavailable.

D. off-site power with DG1 running unloaded.

Feedback

K/A: 295005 A1.07
Ability to operate and/or monitor the following as they apply to MAIN TURBINE GENERATOR TRIP:
A.C. electrical distribution
(CFR: 41.7 / 45.6)

RO/SRO Rating: 3.3/3.3

Objective:
CLS-LP-27*05
5. State the effect that actuation of a main generator lockout relay will have on the Main Generator and station loads.

CLS-LP-39 /Objectives 3, 7, 12
3. Given plant conditions, determine if EDGs will automatically start.
7. Given plant conditions, determine if:
   a. EDG output breaker will trip
   b. E Bus Master/Slave breakers will trip with the EDG in manual mode
12. Given plant conditions, determine if permissives are satisfied for the EDG output breaker to close (either automatically or manually).

Reference:
SD-39, Sections 3.2.4, 3.2.6, 3.2.7, and 3.2.10

Cog Level: High

Explanation: Based on the conditions the RO will have to determine the status in order to report to the CRS which meets the monitoring AC electrical on a generator trip.
Generator primary lockout is a loss of off-site power signal to DG auto start logic. All four DGs will auto start. The DG1 auto start signal will trip the DG1 output breaker to allow the DG to transfer from the manual to auto mode of operation (governor, voltage regulator, trip circuits). The DG will then tie back onto the bus once the bus stripped interlock and bus undervoltage interlock is satisfied. Otherwise it will continue to run unloaded. Bus 1C fails to transfer from UAT to SAT on the trip. This results in loss of BOP bus 1C but this bus feeds E2, not E1 so Bus E1 will remain powered from off-site power (BOP bus). DG2 will auto start, tie to bus E2. Bus E1 is being powered from off-site power via BOP bus 1D and the DG1 is running unloaded

Distractor Analysis:
Choice A: Plausible because if the peaking relays on the E Bus actuated and tripped the master/slave breakers. Peaking relays could actuate during a fast transfer with a DG in parallel if the turbine had tripped resulting in a backup lockout rather than a primary.

Choice B: Plausible because this would be the most likely configuration if the turbine tripped resulting in a backup generator lockout instead of a primary lockout (would not produce a LOOP signal).

Choice C: Plausible because since this would be the configuration if the BOP bus that failed to transfer to the SAT was bus 1D rather than 1C.

Choice D: Correct Answer

SRO Only Basis: N/A

Notes

3.2.4 Automatic Start

The DG auto start circuitry actuates on a loss of power at designated points in the plant electrical system and also actuates on a loss-of-coolant accident. The following is a list of the parameters or conditions which will initiate an auto start of the EDGs. Each of the automatic starting logic schemes is discussed below.

2. Electrical System Faults (Figure 39-12)

A Loss Of Off-Site Power (LOOP) DG auto start signal will be generated for **all four EDGs** if any <u>one</u> of the following conditions exists on **either unit**:

- Generator Primary Lockout for either unit (Division I logic only) which is caused by:
  - generator overall differential
  - generator reverse power
  - distance relay
  - generator output breaker failure
  - UAT differential phase overcurrent
  - Generator loss of field
- SAT Lockout (Division I logic only) for either unit.
- Generator Differential Lockout (Division II logic only) either unit.
- Transformer Bus Differential Lockout (Division I logic only) for either unit.
- SAT secondary side undervoltage.

3.2.10 Trip Of The Bus C/D Master Slave Breaker To The E Bus

Any device that trips the Master Breaker will cause the Slave Breaker to trip, and any device that trips the Slave Breaker will cause the Master Breaker to trip. A trip of the Master/Slave breaker will result in an E bus undervoltage condition allowing the EDG to auto start and tie onto the associated E bus once EDG breaker permissives were met.

The Master and/or Slave Breakers will trip if:

- Overcurrent is detected on any phase of master (or slave) breaker supply side.
- Undervoltage exists on the 4160V AC bus feeding the associated E-Bus.
- A LOCA occurs AND undervoltage exists on the SAT for the respective unit.
- A divisional start signal exists from Loss of BOP Bus DG start logic.
- Degraded voltage is sensed on the E bus (after a 10 second time delay).

Master Slave Breaker Trips with EDG Paralleled (in manual mode) to the Grid

With a EDG in a manual (control room or local) mode of operation, and its output breaker closed, protective relaying at the E bus is aligned to the trip circuit of the Slave breaker to protect the EDG from an overload condition should the normal source of power to the E bus be lost with the EDG in parallel. These relays sense E bus voltage (27 PK), bus frequency (81 PK) and directional power (32 PK) from the E bus to the BOP bus. Actuation of any of these relays with the EDG in manual and its output breaker closed, will trip the Slave (and the Master) breakers to separate the EDG from the BOP bus preventing possible overload of the EDG. With the EDG in parallel, if the normal supply breaker to the BOP bus were opened, the EDG would try to carry the BOP bus loads. Since these loads are beyond the EDG capability, bus voltage and frequency would drop, and a large power flow from the E bus to the BOP bus would occur. One or more of the PK relays will actuate to separate the EDG from the overload, and allow the EDG to carry the E bus loads. Note that the EDG breaker will likely trip due to the auto start signal from loss of BOP bus, and tie back onto the E bus after loads have stripped. The EDG meanwhile would revert to the auto mode of operation.

Categories

K/A:	295005 A1.07	Tier / Group:	T1G1
RO Rating:	3.3	SRO Rating:	3.3
LP Obj:	CLS-LP-27*05	Source:	PREV
Cog Level:	HIGH	Category 8:	Y

41. Unit Two has experienced an ATWS.

Which one of the following conditions satisfies the Technical Specification Shutdown Margin requirements for this condition?

A. SLC Storage tank level reaching 20% following SLC initiation.

B. ✓ All control rods fully inserted except one control rod at position 48.

C. All control rods fully inserted except nine control rods at position 02.

D. The reactor is subcritical with reactor power below the heating range.

Feedback

K/A: 295006 K1.02
Knowledge of the operational implications of the following concepts as they apply to SCRAM :
Shutdown margin
(CFR: 41.8 to 41.10)

RO/SRO Rating: 3.4/3.7

Objective: CLS-LP-200-B*02
2. Define the terms listed in Section 1.1.

Reference:
Unit 2 Tech Spec Definition

Cog Level: Low

Explanation:
SHUTDOWN MARGIN (SDM) SDM shall be the amount of reactivity by which the reactor is subcritical or would be subcritical assuming that:

a. The reactor is xenon free;
b. The moderator temperature is 68°F; and
c. All control rods are fully inserted except for the single control rod of highest reactivity worth, which is assumed to be fully withdrawn.

With control rods not capable of being fully inserted, the reactivity worth of these control rods must be accounted for in the determination of SDM.

Distractor Analysis:
Choice A: Plausible because SLC tank level is below 32% (HSDBW) which allows raising reactor water level during an ATWS. 0% SLC tank level (CSDBW)is utilized to assure the reactor will remain shut down irrespective of control rod position or reactor temperature. If any amount of boron less than the CSBW has been injected into the reactor vessel, cooldown is not permitted unless it can be determined that control rod insertion alone ensures the reactor will remain shut down under all conditions. The core reactivity response from cooldown in a partially borated core is unpredictable and subsequent steps may not prescribe the correct actions for such conditions if criticality were to occur.

Choice B: Correct Answer

Choice C: Plausible because this is on of the conditions in Table 5 (Shutdown Without Boron). The definition of MAXIMUM SUBCRITICAL BANKED WITHDRAWAL POSITION, The lowest control rod position to which all controls rods may be withdrawn in bank and the reactor will nonetheless remain shutdown under all conditions. This position is utilized to assure the reactor will remain shutdown irrespective of reactor water temperature. This position has recently be changed from 02 to 00.

Choice D: Plausible because this is the definition of SHUTDOWN as applied to the reactor in 2EOP-01-LPC.

SRO Only Basis: N/A

Notes

1.1 Definitions (continued)

SHUTDOWN MARGIN (SDM)

SDM shall be the amount of reactivity by which the reactor is subcritical or would be subcritical assuming that:

a. The reactor is xenon free;

b. The moderator temperature is 68°F; and

c. All control rods are fully inserted except for the single control rod of highest reactivity worth, which is assumed to be fully withdrawn.

With control rods not capable of being fully inserted, the reactivity worth of these control rods must be accounted for in the determination of SDM.

3.1 REACTIVITY CONTROL SYSTEMS

3.1.1 SHUTDOWN MARGIN (SDM)

LCO 3.1.1 SDM shall be:

a. ≥ 0.38% Δk/k, with the highest worth control rod analytically determined; or

b. ≥ 0.28% Δk/k, with the highest worth control rod determined by test.

APPLICABILITY: MODES 1, 2, 3, 4, and 5.

STEP BASES:

The Cold Shutdown Boron Weight (CSBW) is not a quantity which can be measured by the operator. An SLC tank level of 0% or 6080 pounds of borax injected are equivalent to the CSBW. The Cold Shutdown Boron Weight is defined to be the least weight of soluble boron which, if injected into the reactor vessel and uniformly mixed, will maintain the reactor shut down under all conditions. This weight is utilized to assure the reactor will remain shut down irrespective of control rod position or reactor temperature.

The Cold Shutdown Boron Weight is calculated as approximately 126 pounds of 47% enriched boron in calculation 0EOP-WS-01. The actual Cold Shutdown Boron Weight is not used in the procedure steps. These steps use a level in the SLC tank and a weight of borax as an equivalent for Cold Shutdown Boron Weight. These values are determined in calculation 0EOP-WS-15. It has been decided to use 0% to represent the Cold Shutdown Boron Weight in the procedure. This value can be read by the operator on the indication in the Control Room. The borax concentration for Cold Shutdown Boron Weight used in the procedure is 6080 pounds.

Reactor depressurization and cooldown may not proceed until the conditions listed in Steps RC/P-23 through RC/P-25 are satisfied.

MAXIMUM SUBCRITICAL BANKED WITHDRAWAL POSITION

The lowest control rod position to which all controls rods may be withdrawn in bank and the reactor will nonetheless remain shutdown under all conditions. This position is utilized to assure the reactor will remain shutdown irrespective of reactor water temperature.

MINIMUM ALTERNATE FLOODING PRESSURE

The lowest reactor pressure at which steam flow through open SRVs is sufficient to preclude any clad temperature from exceeding 1500°F even if the reactor core is not completely covered

STEPS RC/P-23 through RC/P-25 (continued)

Injection of the Cold Shutdown Boron Weight into the reactor vessel also provides adequate assurance that the reactor is and will remain shut down.

Step RC/P-23 is used to direct the proper actions. If the reactor is not shutdown, then the pressure control actions remain in place. If the reactor is shutdown, then the subsequent steps can be used to determine if the reactor cooldown can proceed. Shutdown as applied to the reactor is defined as subcritical with reactor power below the heating range.

If no boron has been injected into the reactor vessel, depressurization and cooldown may proceed as long as control rod insertion is sufficient to shut down the reactor. Such action is permitted even though the existing margin to criticality may be small. A return to criticality under these conditions is acceptable because termination of the cooldown will stop the reactor power increase.

If any amount of boron less than the CSBW has been injected into the reactor vessel, cooldown is not permitted unless it can be determined that control rod insertion alone ensures the reactor will remain shut down under all conditions. The core reactivity response from cooldown in a partially borated core is unpredictable and subsequent steps may not prescribe the correct actions for such conditions if criticality were to occur.

REVISION SUMMARY

Revision 8 incorporates the Unit 2 MSBWP position of 00 per EC 56472. Table 5 is also changed to reflect that reactor is shutdown under all conditions without boron if "only 10 control rods are withdrawn to position 02 and no control rod is withdrawn beyond position 02." The Unit 2 value for Group 1 low pressure isolation has been changed from 850 to 835 per EC 50554.

TABLE 5

SHUTDOWN WITHOUT BORON

ONLY ONE CONTROL ROD NOT FULLY INSERTED
NO MORE THAN 10 CONTROL RODS WITHDRAWN TO POSITION 02 AND NO CONTROL ROD WITHDRAWN BEYOND POSITION 02
AS DETERMINED BY REACTOR ENGINEERING

Categories

K/A:	295006 K1.02	Tier / Group:	T1G1
RO Rating:	3.4	SRO Rating:	3.7
LP Obj:	CLS-LP-200-B*02	Source:	NEW
Cog Level:	LOW	Category 8:	Y

42. Which one of the following correctly completes the statement below?

Excessive moisture carryover is caused by __(1)__ reactor water level and results in __(2)__ steam quality exiting the reactor vessel.

A. (1) high
   (2) higher

B. (1) high
   (2) lower

C. (1) low
   (2) higher

D. (1) low
   (2) lower

Feedback

K/A: 295008 K1.01
Knowledge of the operational implications of the following concepts as they apply to HIGH REACTOR WATER LEVEL :
Moisture carryover
(CFR: 41.8 to 41.10)

RO/SRO Rating: 3.0/3.2

Objective: CLS-LP-01*08
8. With regard to moisture carryover:
   a. Define the term.
   b. Describe how it is affected by reactor water level.
   c. Describe the adverse affects.

Reference:
SD-01, Revision 07, Page 22, Section 2.1.14.a

Cog Level: Low

Explanation:
Moisture carryover is defined as that moisture entrained in the steam exiting the Reactor Pressure Vessel. The amount of carryover is affected by the reactor water level. If the water level is too high, the water draining out of the separators tends to back up resulting in increased moisture out the top of the separators. Too much moisture will overload the steam dryers with a resultant decrease in steam quality exiting the reactor vessel.

Distractor Analysis:
Choice A: Plausible because (1) is correct and (2) is easily confused with Moisture Content, which would be HIGHER.

Choice B: Correct Answer

Choice C: Plausible because (1) low reactor water level results in Carryunder, and (2) is easily confused with Moisture Content, which would be HIGHER.

Choice D: Plausible because (1) low reactor water level results in Carryunder, and (2) is correct.

SRO Only Basis: N/A

Notes

a. **Moisture Carryover**

Moisture carryover is defined as that moisture entrained in the steam exiting the Reactor Pressure Vessel. The amount of carryover is affected by the reactor water level. If the water level is too high, the water draining out of the separators tends to back up resulting in increased moisture out the top of the separators. Too much moisture will overload the steam dryers with a resultant decrease in steam quality exiting the reactor vessel. The amount of carryover is minimized in order to: 1) increase turbine efficiency, 2) decrease turbine wear, and 3) minimize the amount of radioactivity carried over to the balance of plant (BOP).

b. **Steam Carryunder**

Steam carryunder is defined as that steam entrained with the liquid draining to the downcomer from the steam separators and dryers. Carryunder is always present to some extent, but can become excessive due to a low reactor water level condition when steam is pulled down into the bulk water region below the dryer skirt and mixed with feedwater. The problem with an excessive steam carryunder condition is that this entrained steam results in a lower density fluid reaching the reactor recirculation pumps and jet pumps and decreasing the available net positive suction head (NPSH). The decrease in NPSH increases the chance of recirculation pump and jet pump cavitation. Excessive steam carryunder also decreases the margin to Core Thermal Limits (MCPR).

Categories

K/A:	295008 K1.01	Tier / Group:	T1G2
RO Rating:	3.0	SRO Rating:	3.2
LP Obj:	CLS-LP-01*08	Source:	NEW
Cog Level:	LOW	Category 8:	Y

43. Unit Two is operating at rated power when the following conditions are observed by the RO:

Core Thermal Power initially drops below and then stabilizes slightly above 100%.
Main Generator electrical output (MWe) lowers.

Which one of the following events caused the parameter changes observed above?

A. A single control rod drop.

B. An open Safety Relief Valve.

C. Reactor Recirculation Pump 2A speed rising.

D. 4A Feedwater Heater Extraction steam isolation.

Feedback

K/A: 295014 A2.03
Ability to determine and/or interpret the following as they apply to INADVERTENT REACTIVITY ADDITION :
Cause of reactivity addition
(CFR: 41.10 / 43.5 / 45.13)

RO/SRO Rating: 4.0/4.3

Objective: CLS-LP-302-M*01c
1. Given plant conditions, determine if the following Abnormal Operating Procedure(s) (AOPs) should be entered:
   c. 0AOP 30.0, Safety/Relief Valve Failures

11/09/2008 NCR# 305697, Unit 2 SRV "H" Stuck Open SCRAM

Reference:
sd-20

Cog Level: High

Explanation:
An SRV opening initially reduces reactor pressure (increasing Voids) causing reactor power to lower. The EHC system senses lower PAM pressure and reduces TCV position to restore pressure. This causes reduced steam flow to the Main Turbine and lower Generator MW output throughout. Reduced steam flow to MT causes less extraction steam flow to FWHs, causing reduction in final feedwater temperature to the reactor, which combined with pressure restoration, raises reactor power above the initial power level.

Distractor Analysis:
Choice A: Plausible because a control rod drop does provide positive reactivity addition. Generator MWe would also increase.

Choice B: Correct Answer

Choice C: Plausible because 2A RR pump speed rising would provide positive reactivity addition. Generator MWe would also increase.

Choice D: Plausible because extraction steam isolation does cause feedwater temperature reduction positive reactivity addition. Generator MWe would also increase. A FWH tube leak would look similar to the SRV opening which is different from the extraction isolation.

SRO Only Basis: N/A

Notes

4.2.3 ADS/SRV Failures

Abnormal Operating Procedure AOP-30.0, Safety/Relief Valve Failures, includes the following as symptoms of SRV failures:

- SAFETY/RELIEF VALVE OPEN annunciates (A-03 1-10).
- Open indication on Panel P601 for the affected valve.
- Process computer prints out the affected valve number.
- Feedwater flow is greater than steam flow due to the main steam flow detectors being located downstream of the ADS/SRVs.
- Generator power decreases.
- Reactor vessel level increases due to swell and then settles out at a lower level due to steam flow/feed flow mismatch.
- Suppression pool level oscillating.
- SAFETY OR DEPRESS VLV LEAKING annunciates (A-03 1-1).
- Temperature in the SRV discharge pipe is above normal on B21-TR-R614 (Panel H12-P614).
- Millivolt signal on the FFD Cabinet (CB-XU-73) for the affected SRV higher than normal.
- Suppression pool level and temperature increases.

Automatic actions which occur as a result of an SRV failure include

- The Feedwater Control System establishing an equilibrium water level below the normal level

1.0 SYMPTOMS

1.1 *SAFETY/RELIEF VALVE OPEN* (A-03 1-10) is in alarm.

1.2 *SAFETY OR DEPRESS VLV LEAKING* (A-03 1-1) is in alarm.

1.3 Open indication on Panel P601 for the affected safety/relief valve.

1.4 Process Computer Alarm Display indicating the affected safety/relief valve number.

1.5 Steam flow/feed flow mismatch with feed flow greater than steam flow.

1.6 Generator power decrease.

1.7 Reactor vessel level increase due to swell. Level may settle out at a lower value due to steam flow/feed flow mismatch.

1.8 Suppression pool level oscillation.

1.9 Suppression pool level increase.

1.10 Suppression pool temperature increase.

1.11 Safety/relief valve leak detection temperature, as read on *B21-TR-R614* at Panel P614, indicates higher than normal for the affected safety/relief valve.

1.12 Safety/relief valve noise amplitude millivolt signal, as read on Fluid Flow Detector Cabinet CB-XU-73, indicates higher than normal for the affected safety/relief valve.

2.0 AUTOMATIC ACTIONS

2.1 **IF** Digital Feedwater Level Control System remains in 3 element control, **THEN** the system will establish an equilibrium reactor vessel water level below the original level.

2.2 **IF** Digital Feedwater Level Control System shifts to single element control, **THEN** reactor vessel level should return to approximately the original level.

2.3 The EHC system will reduce generator load as necessary to maintain reactor pressure.

4.0 GENERAL DISCUSSION

Positive reactivity insertion will cause an increase in reactor thermal power. Some of the causes of cold water addition are loss of feedwater heating, raising the speed of a reactor recirculation pump, control rod drop, and inadvertent HPCI or RCIC initiation. The severity of this transient is determined by how long the abnormally high power level is sustained, especially on a loss of feedwater heating.

The OPRM system provides alarms and automatic trips as applicable. If the OPRM System is inoperable, then Tech Specs require an alternate method to detect and suppress thermal hydraulic instability oscillations in accordance with BWR Owner's Group Guidelines for Stability Interim Corrective Action, June 6 1994. This requires three stability monitoring regions (Region A - manual scram, Region B immediate exit, and 5% Buffer).

5.0 REFERENCES

R1 5.1 NEDO-32465-A, Licensing Topical Report: Reactor Stability Detect and Suppress Solutions Licensing Basis Methodology for Reload Applicability GE Nuclear Energy, August 1996

R2 5.2 SOER 84-2, Control Rod Mispositioning

R3 5.3 General Electric Service Information Letter No. 251/251, Supplement 1

5.4 0AOP-04.4 Jet Pump Failure

6.0 ATTACHMENTS

1 Estimated Total Core Flow vs. Core Support Plate Delta-P

2 Confirmation of Reactor Recirculation Pump Forward Flow

Categories

K/A:	295014 A2.03	Tier / Group:	T1G2
RO Rating:	4.0	SRO Rating:	4.3
LP Obj:	CLS-LP-302-M*01C	Source:	NEW
Cog Level:	HIGH	Category 8:	Y

44. Which one of the following correctly identifies why the RWM is bypassed IAW LEP-02, Alternate Control Rod Insertion?

Bypassing the RWM bypasses rod __(1)__ Blocks to allow control rods to be __(2)__.

A. (1) Select
(2) selected

B. (1) Select
(2) inserted

C. (1) Insert
(2) selected

D✓ (1) Insert
(2) inserted

Feedback

K/A: 295015 K3.01
Knowledge of the reasons for the following responses as they apply to INCOMPLETE SCRAM :
Bypassing rod insertion blocks
(CFR: 41.5 / 45.6)

RO/SRO Rating: 3.4/3.7

Objective: CLS-LP-007*02d
2.d State the purpose(s) of the following RWM components: Bypass Switch

Reference:
LEP-02

Cog Level: Low

Explanation:
LEP-02 is the procedure tht we use to insert rods that have failed to insert on a scram.
When the keylock switch is placed in the BYPASS mode, there are additional contacts that override the outputs (annunciator, insert block, etc.) from the NUMAC RWM. The BYPASS mode menus, displays and functions are identical to the OPERATE mode menus, displays and functions with the exception that the mode will be displayed as BYPASS. The NUMAC RWM will continue to calculate, display and enforce sequence conditions - however the keylock switch contacts will prevent any actual rod blocks from occurring. Placing the RWM NORMAL/BYPASS switch to "BYPASS" to insert rods defeats the RWM interlocks.

Distractor Analysis:
Choice A: Plausible because the RWM does input to the RMCS to provide for Select Blocks, which if not bypassed will prevent control rod selection.

Choice B: Plausible because the RWM does input to the RMCS to provide for Select Blocks, which if not selected will prevent inserting control rods.

Choice C: Plausible because bypassing the RWM does bypass insert blocks, but inserting via RMCS is only possible if a control rod is selected.

Choice D: Correct Answer

SRO Only Basis: N/A

Notes

Step: Section 5

Source: PSTG RC/Q-6.2

Justification of Difference: Section 5 provides the plant-specific steps required to insert control rods with the Reactor Manual Control System (RMCS) defeating RWM interlocks. The plant-specific steps included in Section 5 are beyond the scope of the PSTG but are required to meet the intent of the PSTG.

Discussion: The purpose of Section 5 is to insert control rods with RMCS. This method is best applied when only a few control rods cannot be inserted, alternate methods are being performed which cannot be performed continuously, RPS cannot be reset, or individual control rod scrams are not effective. To assist in driving control rods it is possible to maximize drive pressure by starting both CRD pumps; throttling open Flow Control Valve, C11-F002A (F002B) [C12-F002A (F002B)]; and, if necessary, throttling closed Drive Pressure Valve, C11-PCV-F003 (C12-PCV-F003). Placing the RWM NORMAL/BYPASS switch to "BYPASS" to insert rods defeats the RWM interlocks.

FIGURE 07.1-22
RWM-OD Bypass Function

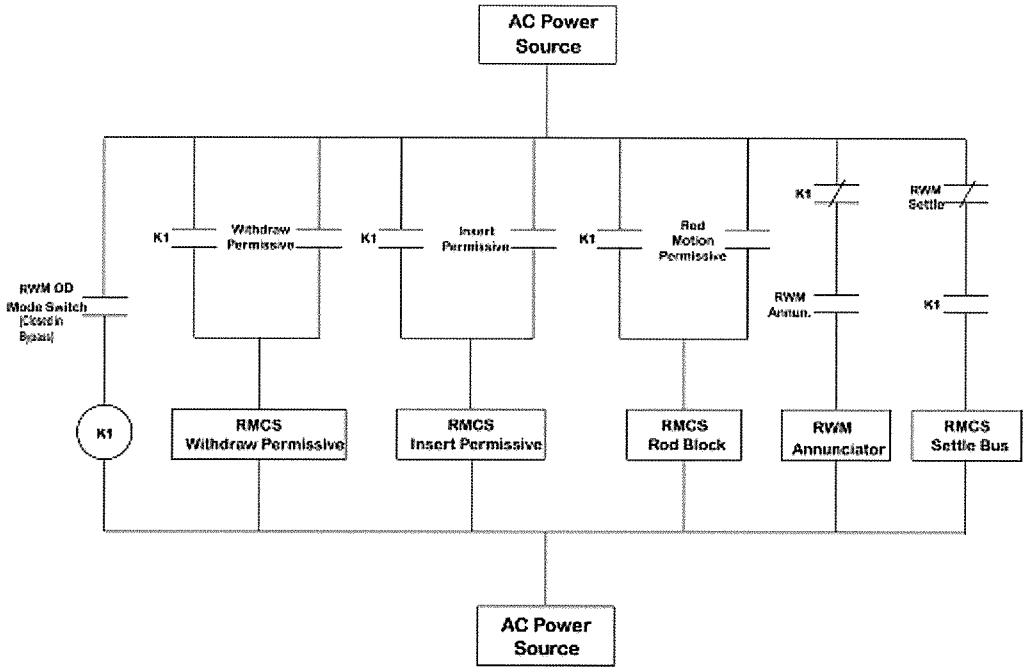

3.4.4 RWM Operator Display Interface

The RWM-OD is interfaced to the RWM-CD to provide a system bypass capability. A contact set provides the bypass capability which includes (Figure 07.1-22):

- Insert permissive bypass, closed in bypass.
- Withdraw permissive bypass, closed in bypass.
- Rod drive block bypass, closed in bypass.
- Settle bypass, open in bypass.
- Annunciator bypass, open in bypass.

3.5.3 RWM Bypass

Placing the RWM-OD keylock mode switch in **BYPASS** will negate all RWM output contacts. If the RWM-CD keylock mode switch is in OPER (operate) and the RWM-OD keylock mode switch is in **BYPASS**, the RWM will continue to calculate, display, and enforce sequence conditions - however, the keylock switch contacts will prevent any actual rod blocks from occurring. Bypass capability continues to exist following loss of power to the RWM-OD.

The purpose of the RWM bypass capability is provided so that the RWM CD chassis can be removed, and replaced while the bypass switch is in the bypass state, without interrupting the system function.

When the RWM is bypassed, procedure 0GP-10 provides the only control rod movement constraints. Second operator verification of control rod select, position, and movement is employed using 0GP-11. Bypass is provided to perform maintenance and testing on the RWM without limiting plant operation. Bypass is also provided to enable control rods to be manually inserted without RWM restriction following a reactor scram.

3.6.4 Bypass - Chassis OPERATE Mode 4

The RWM-CD operates as in mode 1 to provide permissive and annunciation. The RWM-CD bypass switch overrides the RWM-CD outputs.

When the RWM is bypassed, the system provides insert and withdraw permissive information and no annunciation. The capability to receive and transmit rod position data, system status, and to receive and record rod scram time data is not inhibited.

3.6.5 Bypass - Chassis INOP Mode 5

When the RWM-OD is bypassed and the RWM-CD is in INOP, the only insert/withdrawal permissives are those provided by RMCS. There is no annunciation associated with this condition.

1.0 INTRODUCTION

1.1 System Purpose

The purpose of the Reactor Manual Control System (RMCS) is to allow the operator to control core reactivity by inserting and withdrawing control rods. The system consists of the electrical components and logic circuits required to monitor and manipulate the control rods. The Reactor Manual Control System also acts to block rod motion and/or selection in response to protective signals generated by other plant monitoring systems.

Supporting the RMCS is the Rod Position Information System (RPIS) which provides the operator with a means for determining the positions of all control rods in the core and for observing the position of a selected rod in relation to specific adjacent rods. RPIS also provides rod position and identification data to the process computer. For the purposes of this text, RPIS will be considered as a sub-system of RMCS.

3.1.3 Rod Motion Inhibits

Control rod movement can be inhibited by preventing rod selection, blocking rod withdrawal, or blocking rod insertion. These actions can be taken directly by various RMCS circuits or in response to signals generated by other plant monitoring systems.

Three conditions will prevent a control rod from being selected:

- RPIS inoperable
- Timer Malfunction Select Block
- Loss of 28 VDC to the select logic

A failure in the RPIS can prevent a rod from being selected or deselect a rod already selected. Failures that will cause the RPIS to be inoperative are:

- Master Clock Failure - the clock regulates the internal functions of the RPIS.
- Power Supply Failure - The RPIS uses power from the UPS which is converted to 24 VDC for use in the RPIS.
- Card removed or defective - Each position indicator provides information to an associated buffer card for processing and use in the RPIS.

Alternate Control Rod Insertion

Step 5 provides the instructions needed to insert any control rods which are not fully inserted. This step bypasses the Rod Worth Minimizer and inserts the control rods with the Emergency Rod In Notch Override switch. This may be required if any control rods did not fully insert to position 00 or bounced back to position 02 on the reactor scram.

Categories

K/A:	295015 K3.01	Tier / Group:	T1G2
RO Rating:	3.4	SRO Rating:	3.7
LP Obj:	CLS-LP-007*02D	Source:	NEW
Cog Level:	LOW	Category 8:	Y

45. Control Room evacuation has been directed by the Shift Manager due to toxic gas.

Which one of the following correctly identifies the required procedure to be entered and the proper order of immediate actions performed prior to evacuation?

__(1)__, is required to be entered.
Insert a Manual Scram followed by __(2)__.

A. (1) 0ASSD-02, Control Building
(2) confirmation that reactor power is less than 2%

B. (1) 0ASSD-02, Control Building
(2) tripping the main turbine

C. (1) 0AOP-32, Plant Shutdown From Outside the Control Room
(2) confirmation that reactor power is less than 2%

D✓ (1) 0AOP-32, Plant Shutdown From Outside the Control Room
(2) tripping the main turbine

Feedback

K/A: 295016G 2.04.01
Knowledge of EOP entry conditions and immediate action steps.
Control Room Abandonment
(CFR: 41.10 / 43.5 / 45.13)
There is no EOP for Control Room Abandonment, AOP-32.0 does have entry conditions and immediate actions. K/A applied to AOP.

RO/SRO Rating: 4.6/4.8

Objective: CLS-LP-302-E*002
2. List the Immediate Operator Actions required in accordance with 0AOP-32.0, Plant Shutdown from Outside Control Room.

Reference:
0AOP-32.0, Rev. 47

Cog Level: High

Explanation:
Control room evacuation due to:
1.1 Unsafe conditions such as toxic gas, high airborne activity, or unforeseen emergencies which requires evacuation of the Control Room.
1.2 Control Room habitability, with the assistance of a breathing apparatus, has been evaluated by the Site Emergency Coordinator, AND an evacuation has been determined to be necessary.
IF Control Room evacuation was due to fire, explosion, or similar occurrence that could result in degradation of the Control Room wiring, THEN EXIT AOP-32 & GO TO 0PFP-013.
0PFP-013 directs reference to 0ASSD-01 (Index) for the appropriate procedure based on fire location. Control Building fire requires entry into 0ASSD-02.

AOP-32 immediate actions are to be performed in a specific order so as to not challenge equipment.
1. **MANUALLY** SCRAM the reactor.
2. **TRIP** the main turbine.
3. **OBSERVE** auxiliary power transferred to the SAT.
4. Unit 1 only: **PLACE** the Reactor Mode Switch to *SHUTDOWN.*
5. Unit 2 only: **WHEN** steam flow is less than 3 x 106 lb/hr, **THEN PLACE** the Reactor Mode Switch to *SHUTDOWN.*

6. **TRIP** both Reactor Recirculation Pumps.
7. **REDUCE** reactor pressure to approximately 700 psig using the bypass valve opening jack.
8. **WHEN** reactor pressure reaches approximately 700 psig, **THEN PLACE** the control switches for the *INBOARD* and *OUTBOARD MSIVS* to *CLOSE*.
9. **PLACE** Mode Selector Switches for Condensate Booster Pumps in *MAN.*
10. **PLACE** Mode Selector Switches for the Condensate Pumps in *MAN.*
11. **GO TO** 1(2)EOP-01-RSP **AND PERFORM CONCURRENTLY** as many of the actions as possible prior to evacuation.

Distractor Analysis:

Choice A: Plausible because 0ASSD-02, Control Building, would be required to be entered due to control room evacuation due to fire. The confirmation of reactor power is less than 2% is the next step in 0ASSD-01 following the Unit SCO determines alternative safe shutdown actions are required. This is also a recent change to the order in which the RSP immediate actions were.

Choice B: Plausible because Plausible because 0ASSD-02, Control Building, would be required to be entered due to control room evacuation due to fire. Tripping the main turbine is correct.

Choice C: Plausible because AOP-32 is correct, The confirmation of reactor power is less than 2% is the next step in 0ASSD-01 following the Unit SCO determines alternative safe shutdown actions are required. This is also a recent change to the order in which the RSP immediate actions were.

Choice D: Correct Answer

SRO Only Basis: N/A

Notes

1.0 SYMPTOMS

1.1 Unsafe conditions such as toxic gas, high airborne activity, or unforeseen emergencies which requires evacuation of the Control Room.

1.2 Control Room habitability, with the assistance of a breathing apparatus, has been evaluated by the Site Emergency Coordinator, **AND** an evacuation has been determined to be necessary.

2.0 AUTOMATIC ACTIONS

None

3.0 OPERATOR ACTIONS

3.1 Immediate Actions

3.1.1 IF Control Room evacuation was due to fire, explosion, or similar occurrence that could result in degradation of the Control Room wiring, **THEN EXIT** this procedure **AND GO TO** 0PFP-013. ☐

3.1.2 **WHEN** Control Room evacuation is determined to be required, **THEN COMPLETE** as many of the following actions as possible in the sequence listed prior to the evacuation:

1. **MANUALLY** SCRAM the reactor. ☐
2. **TRIP** the main turbine. ☐

CAUTION

Auxiliary power should automatically transfer from the UAT to the SAT. If a transfer does **NOT** occur, and manual actions are taken to restore the buses, reenergizing the SAT may result in an auto start of plant equipment (Circulating Water Pumps, Condensate Pumps, and Condensate Booster Pumps, etc.).

3. **OBSERVE** auxiliary power transferred to the SAT. ☐

3.0 OPERATOR ACTIONS

4. Unit 1 only: **PLACE** the Reactor Mode Switch to *SHUTDOWN*. ☐

5. Unit 2 only: **WHEN** steam flow is less than 3 x 10^6 lb/hr, **THEN PLACE** the Reactor Mode Switch to *SHUTDOWN*. ☐

6. **TRIP** both Reactor Recirculation Pumps. ☐

CAUTION

Unit 2 only: Steam flow must be maintained less than 3 x 10^6 lb/hr during pressure reduction to 700 psig to prevent Group 1 Isolation.

7. **REDUCE** reactor pressure to approximately 700 psig using the bypass valve opening jack. ☐

8. **WHEN** reactor pressure reaches approximately 700 psig, **THEN PLACE** the control switches for the *INBOARD* and *OUTBOARD MSIVS* to *CLOSE*. ☐

9. **PLACE** Mode Selector Switches for Condensate Booster Pumps in *MAN*. ☐

10. **PLACE** Mode Selector Switches for the Condensate Pumps in *MAN*. ☐

11. **GO TO** 1(2)EOP-01-RSP **AND PERFORM CONCURRENTLY** as many of the actions as possible prior to evacuation. ☐

3.1.3 **IF** the reactor SCRAM **AND** MSIV closure could **NOT** be completed prior to evacuation, **THEN PERFORM** the following from the cable spread area:

1. **OPEN** *EPA #2, RPS MG SET A.* ☐
2. **OPEN** *EPA #1 RPS MG SET A.* ☐
3. **OPEN** *EPA #4 RPS MG SET B.* ☐
4. **OPEN** *EPA #3 RPS MG SET B.* ☐
5. **OPEN** *EPA #6 RPS MG SET ALTERNATE SOURCE.* ☐
6. **OPEN** *EPA #5 RPS MG SET ALTERNATE SOURCE.* ☐

3.0 TECHNIQUES OF EOP USE

No lines shall cross or intersect on the flowchart. When more than one line goes to the same point the lines shall be combined so that a path is represented by a single line. At the point where each line meets with the path line a direction arrow shall be included on the line to indicate the direction the line is going.

Connecting lines that run parallel to each other shall have directional arrows appropriately placed to indicate the flow direction of the individual lines.

3.3 Operator Actions

3.3.1 Control Operator Immediate Actions

The control operator immediate actions are those actions which may be performed following a reactor scram prior to entering the scram procedure (EOP-01). These actions are not mandatory and shall not conflict with entering the scram procedure. All the control operator immediate actions are located in the scram procedure flowchart. There are no control operator immediate actions in EOP-02 through EOP-04. In the event the actions are not performed prior to entering the scram procedure, the scram procedure shall take precedence. The control operator immediate actions which should be memorized by control operators, are defined as follows:

1. **Unit 2 Only:** After steam flow is less than 3×10^5 lb/hr, PLACE the reactor mode switch to SHUTDOWN.

   Unit 1 Only: PLACE the reactor mode switch to SHUTDOWN.

2. **IF** reactor power is below 2% (APRM downscale trip), **THEN** TRIP the main turbine.

3. **ENSURE** the master reactor level controller setpoint is +170".

4. **IF** two reactor feed pumps are running, **AND** reactor vessel level is above +160" **AND** rising, **THEN** TRIP one.

The EOP actions are those which are contained within EOP-01 through EOP-04. In the event the control operator immediate actions are not performed prior to entering EOP-01, these actions become EOP actions.

Since the EOP actions are readily available to the control operator, there is no need to memorize them.

3.0 OPERATOR ACTIONS

NOTE:	When an ASSD procedure is identified for a given ASSD fire area, entry into that procedure is **NOT** made until directed by this procedure.

3.1 **WHEN** the specific location of the fire has been identified, **REFER** to Table 1 **AND** Table 2 to determine whether an ASSD fire area is involved **AND** the correct procedure. ☐

3.2 **IF** the fire is **NOT** located in an ASSD fire area for either unit, **THEN EXIT** this procedure. ☐

3.3 **IF** the fire is in an ASSD fire area on either unit, **THEN** the Unit SCO will assess the situation considering the following:

- Location, size and severity of the fire ☐
- Effect of the fire on ASSD equipment ☐
- Limiting Conditions for Operation resulting from fire ☐
- Control room habitability ☐
- Effect of the fire on balance of plant ☐
- Information provided in the applicable ASSD procedure ☐

3.4 **IF** the Unit SCO determines the ability to confirm reactor power less than 2% is in jeopardy, **THEN PERFORM** the following:

3.4.1 **MANUALLY SCRAM** the reactor. ☐

3.4.2 **CONFIRM** reactor power is less than 2% using one of the following:

- Neutron Monitoring System ☐
- Rod Position Indication System ☐

3.0 OPERATOR ACTIONS

NOTE:	IF local ASSD actions are in progress in a plant area adjacent to the fire area, **THEN** the Shift Incident Commander should be notified.
NOTE:	A determination that safe shutdown actions are required implies that the Unit SRO has decided that use of the guidance within the ASSD procedures is necessary in order to achieve and maintain Cold Shutdown as an event mitigation strategy.

3.5 IF the Unit SCO determines alternative safe shutdown actions are required, **THEN PERFORM** the following:

3.5.1 IF the affected unit is **NOT** shutdown, **THEN**

a. **MANUALLY SCRAM** the reactor. ☐

b. **CONFIRM** reactor power is less than 2% by using one of the following:

- Neutron Monitoring System ☐
- Rod Position Indication System ☐

3.5.2 IF the fire is in the Control Building fire area, **THEN PERFORM** the following:

a. **MANUALLY SCRAM** Unit 1 reactor. ☐

b. **PLACE** Unit 1 MSIV control switches in *CLOSE*. ☐

c. **MANUALLY SCRAM** Unit 2 reactor. ☐

d. **PLACE** Unit 2 MSIV control switches in *CLOSE*. ☐

e. **OBTAIN** Control Room controlled copy of the Plant Emergency Procedures (PEPs) manual. ☐

f. Both units **EXIT** this procedure **AND ENTER** 0ASSD-02, Control Building. ☐

Categories

K/A:	295016G 2.04.01	Tier / Group:	T1G1
RO Rating:	4.6	SRO Rating:	4.8
LP Obj:	CLS-LP-302-E*002	Source:	NEW
Cog Level:	HIGH	Category 8:	Y

46. A reactor Scram was inserted on Unit Two due to a complete loss of RBCCW.

Which one of the following identifes the MAXIMUM time the CRD Pumps are allowed to be operated IAW 0AOP-16.0, RBCCW System Failure?

A. 1.5 minutes

B. 10 minutes

C. 20 minutes

D. 30 minutes

Feedback

K/A: 295018 A1.02
Ability to operate and/or monitor the following as they apply to PARTIAL OR COMPLETE LOSS OF COMPONENT COOLING WATER :
System loads
(CFR: 41.7 / 45.6)

RO/SRO Rating: 3.3/3.4

Objective: CLS-LP-302-H*012a
12. Given plant conditions and entry into any of the following AOPs, explain the basis for a specific caution, note, or series of procedure steps.
    a. 0AOP-16.0, RBCCW System Failure

Reference:
0AOP-16, Revision19, Page 4, Section 3.2.3 NOTE

Cog Level: Low

Explanation:
A loss of RBCCW will result in elevated CRD pump component temperatures and could possibly lead to CRD pump failure. Both pumps should be tripped if a total loss of RBCCW occurs, but may be run for up to 20 minutes without RBCCW Cooling if directed by the SRO for rod insertions or RPV level control.

Distractor Analysis:
Choice A: Plausible because Reactor Recirculation pumps must be shutdown within 90 seconds (1.5 minutes) with a loss of seal injection and seal cooling flow.

Choice B: Plausible because Reactor Recirculation pumps are allowed continued operation for a maximum of 10 minutes with no RBCCW cooling flow.

Choice C: Correct Answer

Choice D: Plausible because 30 minutes is the required Drywell cooldown time prior to RBCCW pump restart.

SRO Only Basis: N/A

Notes

NOTE:	CRD pumps may **NOT** be operated for greater than 20 minutes without cooling water except as directed by the Unit SCO under the following conditions: - A CRD pump is available **AND** alternate control rod insertion is required OR - CRD pump operation is required for reactor vessel level control

8. **IF** CRD pumps are **NOT** needed for control rod insertion **OR** reactor vessel level control, **THEN TRIP** both CRD pumps. ☐

3.2.4 **IF** there is a partial loss of RBCCW pressure or service water, **THEN PERFORM** the following:

R15 1. **IF** any of the following conditions exist, **THEN REFER** to 0AOP-18.0 or 0AOP-19.0:

- High temperatures on equipment cooled by RBCCW ☐
- NSW or CSW header pressure approaching pump shutoff head (approximately 90 psig) ☐
- *RBCCW HX OUTLET HDR TEMP HI* (UA-03 1-3) in alarm ☐

3.1.13 **IF** Recirculation Pump seal injection flow is lost, **THEN** it should be restored in accordance with Section 8.6, 8.7, or 8.8 depending on the cause of the loss of flow and the condition of pump seal leakage.

3.1.14 **IF** seal injection flow and seal cooling water flow are both lost to an operating Recirculation Pump, **THEN** the seal staging valve must be closed and the pump shut down within 90 seconds.

3.0 OPERATOR ACTIONS

2. **MONITOR** recirculation pump seal temperature on *RECIRC. PUMP TEMP* recorder, *B32-TR-R601*. ☐

3. **IF** either of the following conditions exist, **THEN SHUT DOWN** the affected reactor recirculation pump(s):

   - Seal heat exchanger inlet temperature for Seal 1 or Seal 2 exceeds 200°F ☐

   - RBCCW to the recirculation pump seal heat exchangers is lost for more than 10 minutes. ☐

ATTACHMENT 6
Page 1 of 1

R22 **Required Drywell Cooldown Time Prior to RBCCW Pump Restart**

R Reference Use

NOTE: For the local drywell temperature ranges given below, the peak local temperature must have cooled to equal to or less than 230°F for the time indicated before RBCCW pumps may be restarted.

NOTE: **CAC-TR-4426 only**: If any air temperature indication at or below the 29' elevation reached or exceeded 285°F, then the Required Drywell Cooldown Time shown in Table 1 or Table 2 will be determined using the highest indicated air temperature ≥260°F currently existing at or below the 29' elevation. This action takes precedence over temperature indications above the 29' elevation.

NOTE: **CAC-TR-778 only**: If any air temperature indication at or below the 29' elevation reached or exceeded 284°F, then the Required Drywell Cooldown Time shown in Table 1 or Table 2 will be determined using the highest indicated air temperature ≥258°F currently existing at or below the 29' elevation. This action takes precedence over temperature indications above the 29' elevation.

TABLE 1

>450°F	>400°F and ≤450°F	>350°F and ≤400°F	>300°F and ≤350°F	**CAC-TR-4426:** >260°F and ≤300°F **CAC-TR-778:** >258°F and ≤300°F
43 minutes	39 minutes	36 minutes	30 minutes	22 minutes

Categories

K/A:	295018 A1.02	Tier / Group:	T1G1
RO Rating:	3.3	SRO Rating:	3.4
LP Obj:	CLS-LP-302-H*012A	Source:	NEW
Cog Level:	LOW	Category 8:	Y

47. The Unit Two Reactor Instrument Air Non-Interruptible/Pneumatic Nitrogen Supply (RNA/PNS) header pressure has lowered to 65 psig due to a leak.

Which one of the following identifies the impact on the Outboard MSIVs due to the RNA/PNS header pressure?

The Outboard MSIVs:

A. will stay open due to the accumulators associated with the valve operators.

B. will stay open due to the Backup Nitrogen valves, SV-5481 and SV-5482, opening.

C. closed immediately when RNA/PNS header pressure dropped below 70 psig.

D. eventually drift closed due to the sustained low header pressure.

Feedback

K/A: 295019G 2.02.37
Ability to determine operability and/or availability of safety related equipment.
Partial or Complete Loss of Instrument Air
(CFR: 41.7 / 43.5 / 45.12)

RO/SRO Rating: 3.6/4.6

Objective: CLS-LP-25*08b
8. Given plant conditions, predict the effect that the following will have on the Main Steam System:
   b. Loss of Reactor Non-interruptible Air (RNA)/PNS/Backup Nitrogen.

Reference:
SD-46, Revision 10, Page 33, Section 4.2.4

Cog Level: Low

Explanation:
The pneumatic sources for the outboard MSIVs are Reactor Building Non-Interruptible Air (RNA) System Division I and Division II. The pneumatic sources for the inboard MSIVs are Pneumatic Nitrogen System (PNS) Division I and Division II when operating in mode 1 and (RNA) System Division I and Division II when shutdown. Unlike the SRVs, a loss of PNS does not result in lining up the BU N2 System to the pneumatic operators. An air accumulator located between the MSIV air operator and the check valves provides backup operating air. The capacity of the accumulator is sufficient for the air operator to exercise the valve through one-half of a cycle (open-to-closed or closed-to-open) should the supply air to the operator be interrupted.

Distractor Analysis:
Choice A: Plausible because the MSIVs have accumulators which will eventually bleed off due to not being completely leak tight.

Choice B: Plausible because Backup Nitrogen supply to components located outside and within the Drywell.

Choice C: Plausible because the MSIV's will not close immediately due to the accumulators associated with the valves.

Choice D: Correct Answer

SRO Only Basis: N/A

Notes

The most probable failure mode of the air system is when individual equipment or components of the system fail. These types of failures would result in reduction of system capacity but would not normally restrict plant operation.

On a loss of plant air, the following general plant response should be expected (without operator action).

approx. 70 psig	MSIVs may start drifting closed after a sustained loss at this pressure (due to accumulators on the valve operators)
approx. 60 psig	Loss of control of the condensate and feedwater system occurs. Pump minimum flow valves start to drift open, feedwater level control valves drift open, hotwell level control valves drift open, heater drain pump discharge valves drift open, SULCV drifts closed.
approx. 40 psig	Control rods start drifting in due to outlet scram valves opening.

4.3.5 Main Steam System

Pneumatically operated components of the Main Steam System are supplied by the RNA/PNS System (refer to Table 46-3).

The Outboard MSIV accumulators are supplied from the RNA subsystem and have no backup source of air if RNA pressure is lost. The Outboard MSIVs will drift closed following a loss of RNA.

PNS normally provides a source of nitrogen to the Inboard MSIV and Safety Relief Valves' (SRV) accumulators. However, it is permissible to supply these loads from the RNA Subsystem if Reactor power does not exceed 15%. In the event the normal RNA/PNS supply is lost, the Nitrogen Backup System will automatically provide operating air to the SRV accumulators when RNA/PNS supply header pressure drops to 95 psig.

The most probable failure mode of the air system is when individual equipment or components of the system fail. These types of failures would result in reduction of system capacity but would not normally restrict plant operation.

On a loss of plant air, the following general plant response should be expected (without operator action).

- approx. 70 psig	MSIVs may start drifting closed after a sustained loss at this pressure (due to accumulators on the valve operators)
- approx. 60 psig	Loss of control of the condensate and feed system. Pump minimum flow valves start to drift open, feedwater level control valves drift open, hotwell level control valves drift open, heater drain pump discharge valves drift open, SULCV drifts closed.
- approx. 50 psig	SA/IA cross-tie valves begin to close.
- approx. 40 psig	Control rods start drifting in due to outlet scram valves opening.

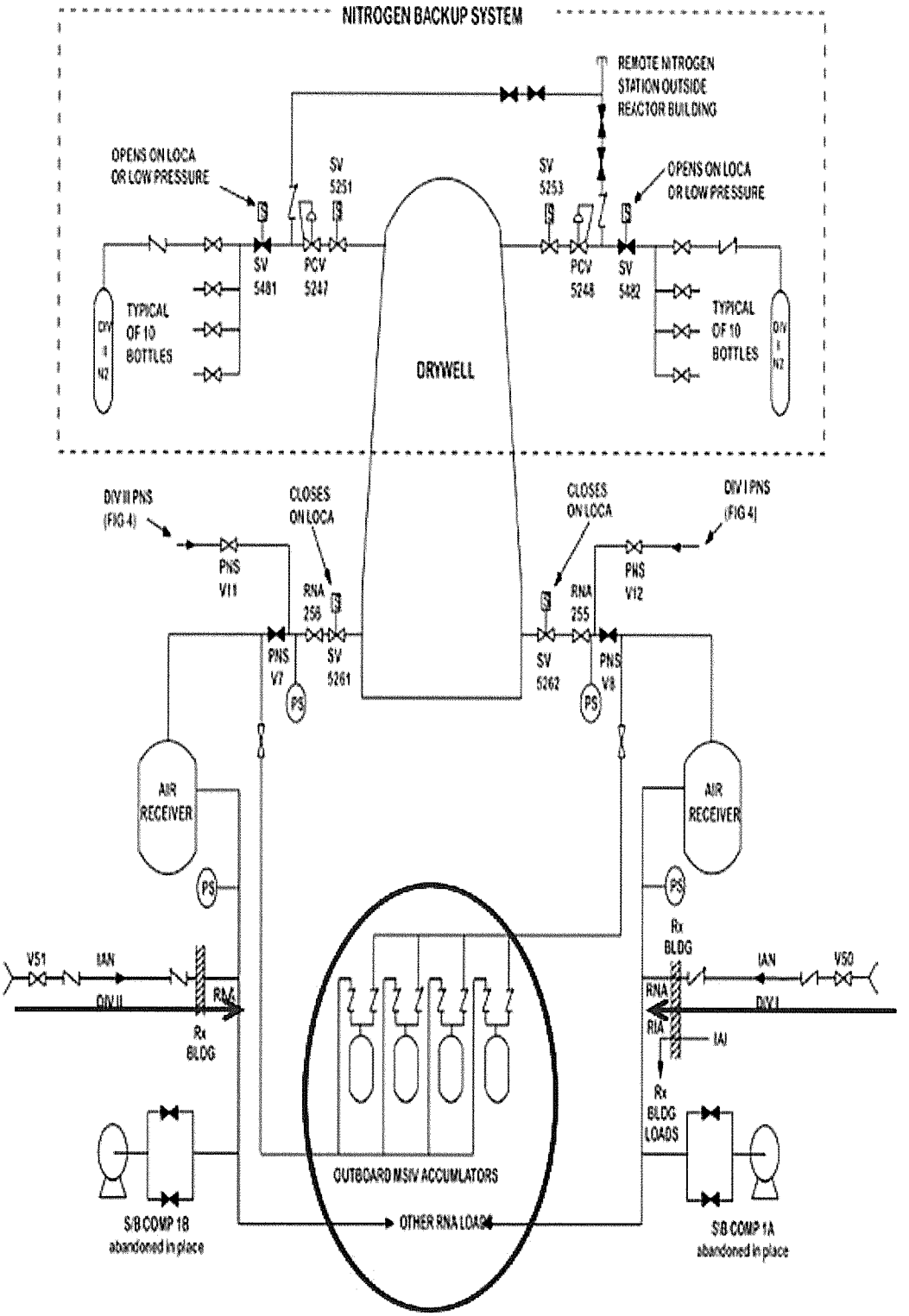

Figure 46-2
Reactor Building Instrument Air Non-Interruptible

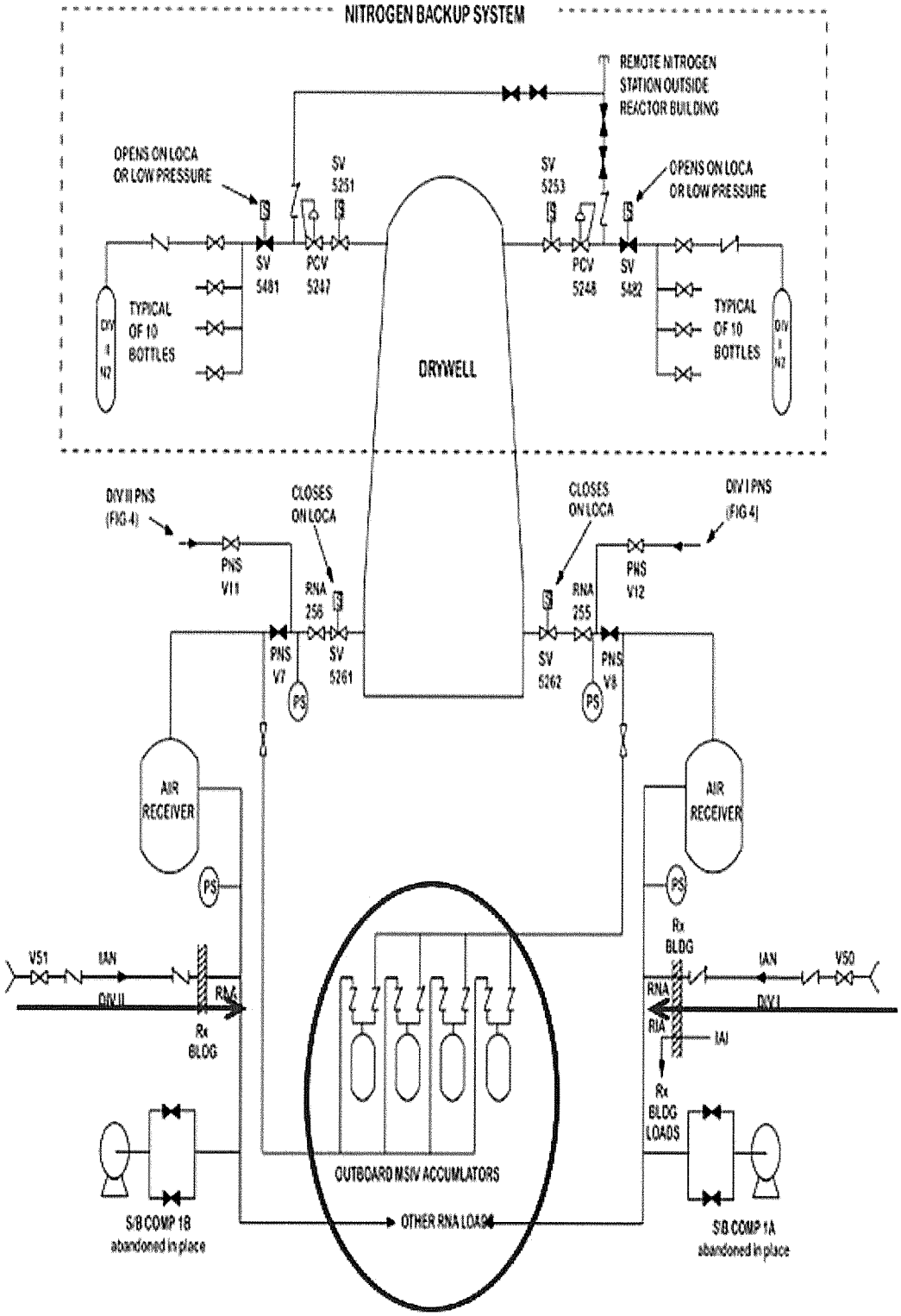

Figure 46-2
Reactor Building Instrument Air Non-Interruptible

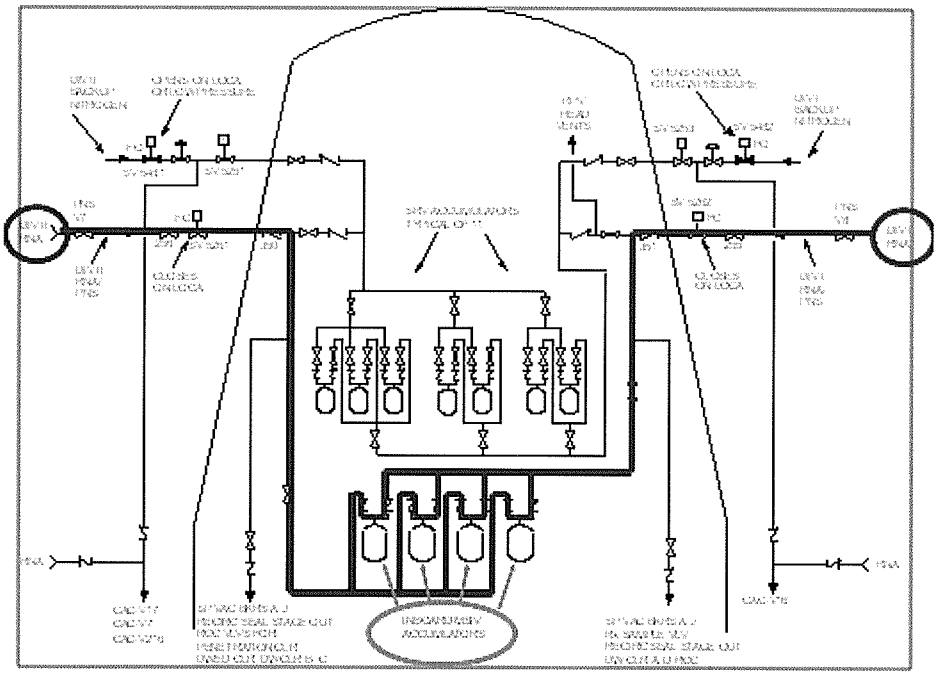

Unit 2
APP UA-01 4-4
Page 1 of 2

INSTR AIR PRESS-LOW

ACTIONS (Continued)

4. Refer to 0AOP-20.0, Pneumatic (Air/Nitrogen) System Failures.
5. Should a total loss of interruptible instrument air occur, backup pneumatic sources should be placed in service or verified in service for equipment having back up pneumatic sources in accordance with 0OP-46; e.g. Fuel pool gates.

DEVICE/SETPOINTS

Pressure Switch IA-PS-723	98-102 psig

POSSIBLE PLANT EFFECTS

1. Loss of service air.
2. Low instrument air pressure may cause abnormal operation of instruments, valves, and controls using instrument air and may result in loss of systems and consequent loss of generation.
3. If noninterruptible instrument air also falls in pressure, individual control rods will drift in followed by main steam isolation valve closure and associated RPS Group 1 isolation scram of all control rods.

REFERENCES

1. LL-9352 - 13
2. 0AOP-20.0, Pneumatic (Air/Nitrogen) System Failures
3. 1APP-UA-01 5-4, Service Air Press-Low
4. 1/2 APP-UA-01 5-3, 1APP-UA-01 6-3 AIR DRYER TROUBLE
5. SOER 88-01, Recommendation 1

7.6 Pneumatic Nitrogen System

C
Continuous
Use

7.6.1 Initial Conditions

NOTE:	Securing the Pneumatic Nitrogen System without transferring loads to the compressed air system will result in the following: - Loss of pressure to drywell RNA headers. - PNS Division I and Division II low and low-low pressure annunciations. - N2 backup initiation signal from *PNS-PSL-5843A* and *PNS-PSL-5843B*. - Inboard MSIVs drifting closed.

1. Primary Containment is **NOT** required to be inerted in accordance with Technical Specification 3.6.3.1 **OR** action statement of Technical Specification 3.6.3.1 has been entered as if the limit has been exceeded. ☐

7.6.2 Procedural Steps

CAUTION

Extreme caution must be used when operating PNS-V9. An inadvertent Scram on the opposite unit will occur if the wrong valve is operated. The Unit 1 handwheel is painted yellow and Unit 2 handwheel is painted blue.

1. **IF** drywell pneumatic loads are to be transferred to the Compressed Air System **THEN PERFORM** Section 8.17 **AND RETURN** to Step 7.6.2.2. ☐

2. **CLOSE** *PNS NITROGEN STORAGE FACILITY ISOLATION VALVE, PNS-V9.* ☐

3. **ENSURE** the following valves are locked closed:

   a. *PNS DIV. II ISOLATION TO DRYWELL VALVE, PNS-V11* ☐

   b. *PNS DIV. I ISOLATION TO DRYWELL VALVE, PNS-V12.* ☐

4. **COMPLETE** Attachment 8. ☐

Categories

K/A:	295019G 2.02.37	Tier / Group:	T1G1
RO Rating:	3.6	SRO Rating:	4.6
LP Obj:	CLS-LP-25*08B	Source:	BANK
Cog Level:	LOW	Category 8:	Y

48. The following Suppression Pool temperatures are observed on Unit Two after a Reactor Scram and inadvertent Group 1 isolation.

Time	Suppression Pool Temperature
0000	93°F
0002	97°F
0004	103°F
0006	109°F
0008	113°F

Which one of the following is the latest time requiring entry into RVCP due to Suppression Pool Temperature ONLY?

A. 0002

B. 0004

C. 0006

D. 0008

Feedback

K/A: 295020G 2.04.01
Knowledge of EOP entry conditions and immediate action steps.
Inadvertent Containment Isolation
(CFR: 41.10 / 43.5 / 45.13)
The EOPs at Brunswick do not have any immediate operator actions, so the question is written for only the EOP entry conditions.

RO/SRO Rating: 4.6/4.8

Objective: LOI-CLS-LP-300-L*08A
8. Given the Primary Containment Control Procedure and plant conditions, determine if the following actions are required:
   a. Manual reactor scram

Reference:
0OI-37.4, Revision 8, Page 4, Section 3.0

Cog Level: High

Explanation:
EOP-02-PCCP requires scram **before** SPT reaches 110°F, RSP requires entry into RVCP when scram is required by EOP-02, 03 or 04. There are no immediate operator actions for EOP entries.

Distractor Analysis:
Choice A: Plausible because SPT exceeded 95°F which is PCCP entry condition.

Choice B: Plausible because SPT exceeded 105°F which is PCCP entry condition while testing.

Choice C: Correct Answer

Choice D: Plausible because SPT exceeded 110°F which is the temperature inserting a Scram is required **prior** to exceeding.

SRO Only Basis: N/A

Notes

REACTOR VESSEL CONTROL

RVCP-1

ENTRY CONDITIONS:

* A REACTOR SCRAM IS REQUIRED AND REACTOR POWER IS ABOVE 2% OR CANNOT BE DETERMINED
* REACTOR WATER LEVEL IS LESS THAN 166 INCHES
* REACTOR PRESS IS ABOVE 1060 PSIG
* DRYWELL PRESS IS ABOVE 1.7 PSIG
* REACTOR SCRAM REQUIRED BY EOP-02-PCCP, EOP-03-SCCP, OR EOP-04-RRCP

RVCP-2

PRIMARY CONTAINMENT CONTROL

PCCP-1

ENTRY CONDITIONS:

* SUPPRESSION POOL TEMP ABOVE 95°F <u>OR</u> ABOVE 105°F WHEN DUE TO TESTING
* DRYWELL AVERAGE AIR TEMP ABOVE 150°F
* DRYWELL PRESS ABOVE 1.7 PSIG
* SUPPRESSION POOL WATER LEVEL ABOVE - 27 INCHES (- 2 FEET & 3 INCHES)
* SUPPRESSION POOL WATER LEVEL BELOW - 31 INCHES (- 2 FEET & 7 INCHES)
* PRIMARY CTMT H2 CONCENTRATION ABOVE 1.5%

PCCP-2

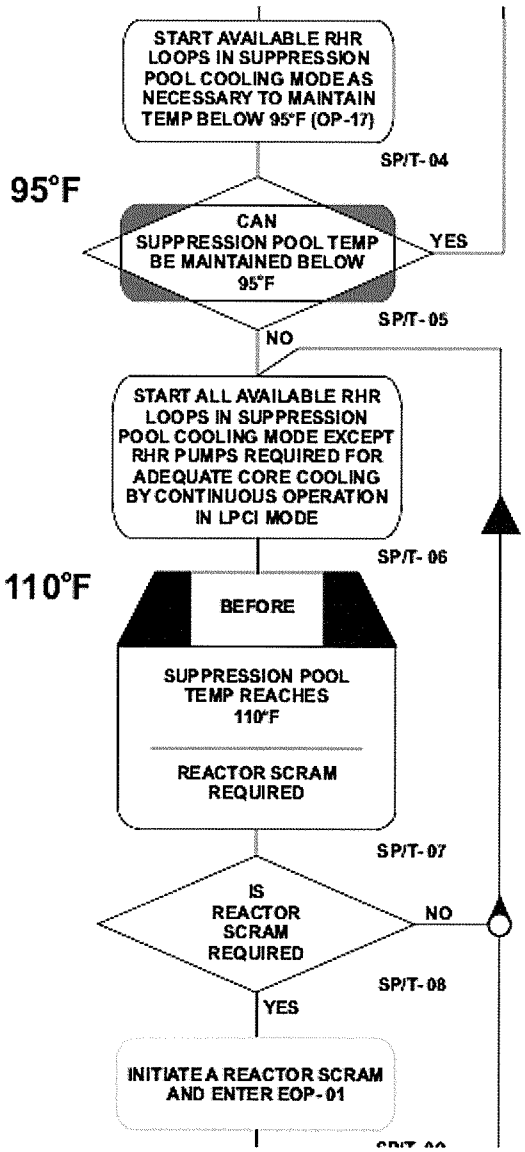

Categories

K/A:	295020G 2.04.01	Tier / Group:	T1G2
RO Rating:	4.6	SRO Rating:	4.8
LP Obj:	LOI-CLS-LP-300-L*08A	Source:	NEW
Cog Level:	HIGH	Category 8:	Y

49. IAW 0GP-05, Unit Shutdown, Unit Two is in Mode 4, flooding the RPV above the Main Steam Lines prior to entering Mode 5.

Which one of the following symptoms can be used to determine that a loss of Shutdown Cooling flow has occurred?

A. Rising vessel pressure.

B. Annunciator *REACTOR WATER LEVEL HIGH/LOW* is in alarm.

C. Annunciator *CORE SPRAY OR RHR PUMPS RUNNING* is flashing.

D. Loss of power to RHR Shutdown Cooling Inbd Isolation Valve, 2-E11-F009.

Feedback

K/A: 295021 A2.02
Ability to determine and/or interpret the following as they apply to LOSS OF SHUTDOWN COOLING :
RHR/shutdown cooling system flow
(CFR: 41.10 / 43.5 / 45.13)

RO/SRO Rating: 3.4/3.4

Objective: CLS-LP-302-L*01a
1. Given plant conditions, determine if the following Abnormal Operating Procedure(s) (AOPs) should be entered:
   a. AOP-15.0, Loss of Shutdown Cooling

Reference:
0AOP-15, Rev. 23, Page 2 - Symptoms

Cog Level: High

Explanation: When the RHR pumps trip the student will know anly from the annunciator being able to be cleared which indicates that there is no flow in the system.

The following prerequisites must be met for vessel flooding above the head flange to support head removal:
Reactor average temperature is less than 200°F
At least one loop of RHR is in Shutdown Cooling
At least one main steam line (preferably MSL A) is available to be used as steam vent
While flooding above the MSLs (260 inches to commence filling), level is raised to 330 inches (bottom area of the lower flange). During this period of time annunciators for Hi Reactor Water Level and Core Spray or RHR Pumps Running are expected to be in alarm, and RPV pressure increases are also expected due to limited venting in comparison to filling capability. RHR pump discharge pressure dropping below 115 psig would cause annunciator to clear. This is recent plant specific OE.

Distractor Analysis:
Choice A: Plausible because in Mode 4, raising RPV level above the MSLs will cause pressure to rise. Any unexplained temperature/pressure rise would be indicative of a loss of SDC.

Choice B: Plausible because a low reactor water level causes SDC isolation.

Choice C: Correct Answer

Choice D: Plausible because valve position directly inputs to RHR pump trip logic. Loss of valve 480V or control power would cause this position indication, mechanical position limit switch actually inputs to pump trip logic (no suction path) and is powered through the limitorque with a source other than the 480 V Breaker or control power.

SRO Only Basis: N/A

Notes

1.0 SYMPTOMS

1.1 *RHR SW PUMP 1A(2A) TRIP* (A-01 1-9) or *RHR SW PUMP 1C (2C) TRIP* (A-01 3-9) is in alarm.

1.2 *RHR SW PUMP 1B(2B) TRIP* (A-03 1-8) or *RHR SW PUMP 1D (2D) TRIP* (A-03 3-8) is in alarm.

1.3 *RHR PUMP 1A(2A) TRIP* (A-01 3-8) or *RHR PUMP 1C(2C) TRIP* (A-01 5-8) is in alarm.

1.4 *RHR PUMP 1B(2B) TRIP* (A-03 3-7) or *RHR PUMP 1D(2D)* TRIP (A-03 5-7) is in alarm.

1.5 *RHR HX A/B DISCH CLG WTR TEMP HI* (A-03 2-9) is in alarm.

1.6 *RHR A/B DISCH & SUCT HDR PRESS HI* (A-03 3-9) is in alarm.

1.7 *REACTOR VESS LO LEVEL TRIP* (A-05 2-6) is in alarm.

1.8 *CORE SPRAY OR RHR PUMPS RUNNING* (A-03 2-1) is flashing.

1.9 ERFIS valve monitoring alarming on RHR valve closure

1.10 Group 8 Isolation Valves close.

1.11 Increasing Reactor Coolant Temperature and/or Pressure.

1.12 High NSW or CSW header pressure approaching pump shutoff head (approximately 90 psig).

1.13 Unexplained changes in running RHRSW loop flow or pump discharge pressure.

CORE SPRAY OR RHR PUMPS RUNNING

AUTO ACTIONS

1. An ADS permissive signal is generated if one Core Spray or two RHR pumps in one loop are operating.

CAUSE

1. Core Spray or RHR pump running.
2. Circuit malfunction.

OBSERVATIONS

1. Core Spray pump(s) or RHR pump(s) are on.
2. Core Spray pump discharge pressure greater than 115 psig (E21-PI-R600A or R600B).
3. RHR pump discharge pressure greater than 115 psig (E11-PI-R606A or R606B).

ACTIONS

1. If a Core Spray or RHR pump has been manually started, take no action.

CAUTION

After an automatic initiation, an ECCS subsystem or RCIC System shall not be shut down or placed in manual until at least two independent indications are verified for one of the following conditions:

1. Adequate core cooling is ensured.
2. The initiation signal was not valid.
3. The system is not functioning properly in the automatic mode.

2. If the RHR System was inadvertently started due to faulty instrumentation, when the reactor water level and drywell pressure have been verified normal, shut down the RHR System and restore it to a standby configuration per OP-17.
3. If the Core Spray System was inadvertently started due to faulty instrumentation, when the reactor water level and drywell pressure

NOTE: The following steps provide direction for vessel flooding above the head flange to cool the head and studs prior to head removal. N/A the remaining steps if NOT applicable.

5.3.65 **CONFIRM** the following conditions exist:

- Reactor average temperature is less than 200°F _____
- At least one loop of RHR is in Shutdown Cooling _____
- At least one main steam line (preferably MSL A) is available to be used as steam vent _____

NOTE: Floodup above the head flange, using CRD injection flow at 100 gpm with minimal RWCU reject flow, will increase vessel level at a rate of approximately 0.65 inch/minute. Estimated time to flood from 220 to 415 inches is 8.5 hours at this flow rate.

CAUTION

During vessel floodup, some steaming may occur at the vessel walls. This will be vented through the head vents to the Drywell Equipment Drain Sump **OR** to the main steam line if **NOT** flooded. **IF** vessel pressure exceeds 25 psig, **THEN** the floodup rate should be reduced or stopped until pressure is reduced to 25 psig. However, a short term pressure as high as 40 psig is permitted if the DWED sump temperature is below 140°F **AND** only the small AOV head vents, *B21-F003* and *F004*, are open.

CAUTION

WHEN flooding the RPV above the main steam lines, increases in vessel pressure are expected. Care should be taken before concluding an inadvertent mode change has occurred. **IF** vessel bulk average temperature is maintained less than 212°F, **THEN** a mode change has **NOT** occurred.

5.3.66 **INCREASE** vessel level to 250 inches. _____

CAUTION

WHEN flooding the RPV above the main steam lines, temperature stratification between the upper vessel and lower vessel are expected to occur because forced circulation cooling is hampered above 240 in. due to the vessel internals and their latent heat. Average bulk water temperature from RCR or RHR should be used below 0 psig.

5.3.71 **INCREASE** vessel level to 260 inches to commence filling main steam lines. ____

NOTE: It will take approximately 1 hour to fill the main steam lines and see an increase in vessel level.

5.3.72 **FREQUENTLY MONITOR** reactor vessel pressure to ensure less than 25 psig. ____

5.3.73 **FREQUENTLY MONITOR** drywell sump levels **AND** temperature. ____

5.3.74 **REQUEST** E&RC periodically monitor radiological conditions at 5 ft. elevation of drywell due to head venting. ____

5.3.75 **WHEN** main steam lines are filled, **THEN INCREASE** vessel level to 330 inches, which corresponds to bottom area of the lower flange. ____

CAUTION

DO NOT authorize removal of RPV head piping unless RPV level has been stabilized at 400 to 420 inches.

5.3.76 **SLOWLY INCREASE** level to between 400 to 420 inches, which corresponds to midway on head dome. (The maximum cooling effect will be seen if level can be maintained at the upper end of the level band.) ____

4.2.5 Loss of Shutdown Cooling

Loss of cooling in a shutdown reactor can have serious consequences. The reactor coolant and RPV temperatures can rise dramatically causing steam production and rising pressure at a time that containment integrity is not maintained. OP-17 and A0P-15 provide alternatives to the "normal" shutdown cooling procedure. OP-17 provides direction for controlling reactor vessel temperature in the RHR shutdown cooling mode and alternate cooling using the fuel pool heat exchangers. It includes many precautions and limitations depending on the specific mode of operation to ensure forced circulation through the reactor core.

Minimum water level for SDC is 200" to 220" or greater for natural circulation during a loss of SDC.

NOTE: Normal level band is approx. 182" to 192".

A0P-15.0 is entered when neither RHR loop can be placed in shutdown cooling and reactor coolant temperature is increasing. Automatic Actions are verification of a Group 8 isolation signal if loss of shutdown cooling was caused by Low Level One or High Steam Dome Pressure. E11-F015A(B) isolates on Low Level One only. ERFIS provides a shutdown screen to monitor critical parameters.

A0P-15.0 provides contingencies for the following methods of decay heat removal:

- RHR SW Loop Failure
- RHR Loop Failure
- Condenser Cooling Failure
- Feed and Bleed Combinations
- Alternate Shutdown Cooling with SRV's

This procedure also provides contingencies for restoring secondary containment and initial emergency actions for loss of shutdown cooling.

4.3.7 AC Power Distribution

Individual MOV power supplies are given in Table 17-4. A loss of the normal source of AC power to the RHR System will not affect the system provided the Emergency Diesel Generators are available. A loss of both power sources is a serious problem in maintaining long term cooling after an accident.

Depending on the exact nature of the failure, the loss of an Emergency Diesel Generator (EDG) could affect the system in the following manner. See Figure 17-2B:

- RHR and RHRSW pumps could be inoperative if busses E1-E4 are lost.
- RHR Motor operated valves could become inoperative if Buses E5-E8 are lost.
- RHR System instrumentation on P601 could be lost if 120 VAC emergency distribution panels are lost.

4.3.8 Reactor Water Level

A failure of RHR in LPCI mode impacts the operators ability to reflood the core following a LOCA. A low RPV level could indicate an RHR system rupture during S/D Cooling. The Group 2 and 8 isolations occur at Low Level One (LL #1).

Closure of PCIS Group 8 valves F008, F009, F015A(B) isolates the RHR system preventing a significant loss of reactor coolant. A failure to close could result in the loss of coolant if a leak occurred. Inadvertent closure while in S/D Cooling would prevent temperature control of the reactor. Subsequent heatup and pressurization could occur if cooling is not reestablished.

TABLE 17-2
Page 7 of 10
Instrument and Control Setpoint
Residual Heat Removal System

INSTRUMENT TRIP FUNCTION	INSTRUMENT DESIGNATION	INDICATOR/ RECORDER	TRIP SETPOINT AND FUNCTION	
Drywell Pressure	E11-PTM-N019A-1 or B-1 and E11-PTM-N019C-1 or D-1	E11-PTM-N019 A-1, B-1, C-1, and D-1	2.7 psig Increasing	- Containment Spray Permissive
Reactor Vessel Level (LL #3)	B21-LTS-N031A-4 or C-4 and B21-LTS-N031B-4 or D-4 *	B21-LTM-N031 A-1, B-1, C-1, and D-1	-45 ins. (7.42 mA) Decreasing	- Initiates RHR LPCI - Annunciation RHR System I Actuated Ann. Pnl. A-01 - Annunciation RHR System II Actuated Ann. Pnl. A-03
Reactor Vessel Pressure	B21-PTS-N021A-2 or B-2 and B21-PTS-N021C-2 or D-2 *	B21-PTM-N021 A-1, B-1, C-1, and D-1	410 psig (17.12 mA) Decreasing	- Permissive to RHR Pump Start and LPCI Valve Operation when in coincidence with High drywell pressure
A RHR Pump Discharge Pressure	E11-PS-N016A* or E11-PS-N020A*	-----	115 psig Increasing	- Permissive to ADS Initiation Logic B - Annunciation Core Spray or RHR Pumps Running Ann. Pnl. A-03

*Technical specification related.

TABLE 17-4
Page 2 of 9
Residual Heat Removal System Valves

Valve	Name	Size, Type	Control Switch	PWR Supply	Controls	Comments
F007A	RHR Minimum Flow Bypass Valve	4" Anchor Darling Flex Wedge Gate Valve with SMB-00 Actuator	E11-S16A	1(2)XA/DF1	Three position switch (CLOSE-AUTO-OPEN) Spring return to AUTO position. F007B Local from breaker	May be manually opened. Will automatically open if flow is less than 2220 gpm and one of its associated pumps is running for 10 seconds.
F007B			E11-S16B	1(2)XB/DL3		Will automatically close if system flow >2300 gpm. Valves have a hole drilled on the inboard disc to prevent pressure locking per ESRs 99-00241 and 99-00166.
F008	RHR S/D Cooling Suction Isolation Valve-Outboard	20" Anchor Darling Flex Wedge Gate Valve with SB-3 Actuator	1(2)-A71-CS-S10	Normal: 1(2)-XDB/B50 AIL ASSO Feed: 1(2)-1XDA/B25	Throttle valve. Three position switch (CLOSE-NORM-OPEN) Spring return to NORM position. Local from breaker	Operator may open if reactor pressure is ≤130.8 psig and reactor level is ≥Low Level One (LL #1). Auto closes if pressure is >130.8 psig or level is < LL #1. No override feature is available. Level signal comes from instrument NOT associated with F008. Pump trip interlock remains active during local operation for F008.
F009	RHR Shutdown Cooling Suction Isolation Valve-Inboard	20" Anchor Darling Split Wedge Gate Valve with SB-3-100 operator	A71-S9	Normal: 1(2)XA/DH3 AIL ASSO Feed: 1(2)XD/DX5	Three position switch (CLOSE-NORM-OPEN) Spring return to NORM position. Local from breaker	Operator may open if reactor pressure is ≤130.8 psig and reactor level is ≥ Low Level One (LL #1). Auto closes if pressure is >130.8 psig or level is < LL #1. No override feature is available. Level signal comes from instrument NOT associated with F008. Pump trip interlock remains active during local operation for F009. NOTE: F009 has a bonnet pressure equalization line installed to support overpressure protection of Penetration X-12.
F010	RHR Crossheader Shutoff	20" Anchor Darling Flex Wedge Gate Valve	N/A	Locked closed.	Manual	None
F011A	RHR Heat Exchanger Drain to Torus	4" Anchor Darling Flex Wedge Gate Valve with SMB-000 Actuator	E11-S37A	1(2)XA/DF2	Three position switch (CLOSE-AUTO-OPEN) Spring return to AUTO position	Automatically closes on LPCI initiation signal.
F011B			E11-S37B	1(2)XB/DL6		

FIGURE 17-9A
RHR Pump Start/Stop Logic "A"

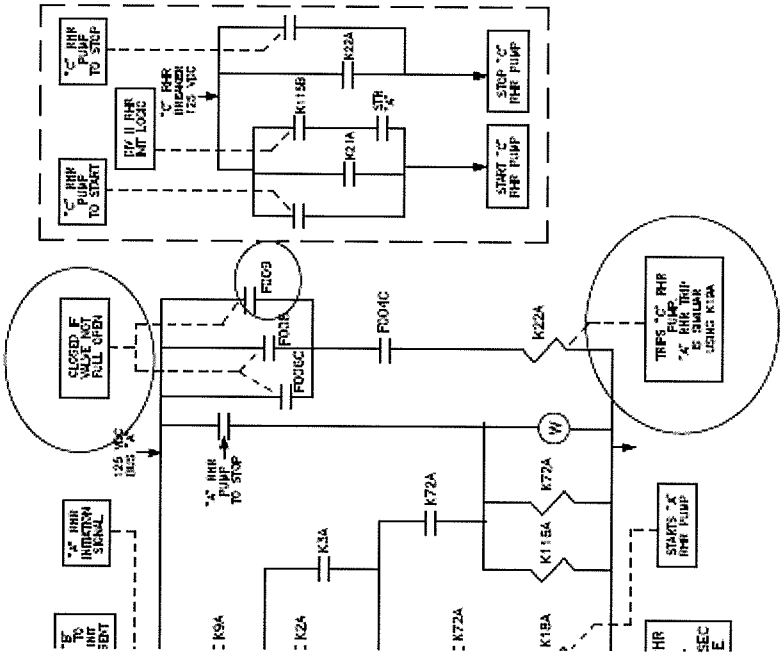

480V Substation E7/MCC/Panel Load Summary

Load: 480V Motor Control Center 2-2XA
Location: Reactor Building 20' NE
Drawing Reference: F-03049
Upstream Power Source: **480V Substation E7**

COMPT	LOAD DESCRIPTION	EFFECTS ON LOSS OF POWER
DG5	RHR Heat Exchanger 2A Service Water Discharge Valve E11-PDV-F068A (TS 3.4.7, 3.4.8, 3.6.2.3, 3.7.1)	Loss of load
DI0	Conventional Header To Vital Header Isolation Valve SW-V111 (TS 3.6.2.3)	Loss of load
DE2	Normal Feed to HPCI Turbine Exhaust Vacuum Breaker Valve E41-F075 (TS 3.5.1, 3.6.1.3, 3.3.3.1)	Loss of load
DE3	Service Water Header To RBCCW Heat Exchangers Primary Isol Vlv SW-V106 (TS 3.7.2 and TRM 3.16)	Loss of load
DE4	Normal Feed to RCIC Turbine Exhaust Vacuum Breaker Valve E51-F082 (TS 3.5.3, 3.6.1.3, 3.3.3.1)	Loss of load
DG7	RHR Heat Exchanger Vent Valve E11-F104A	Loss of load
DG8	RHR Pump 2A and 2C Torus Suction Valve E11-F020A (TS 3.4.7, 3.4.8, 3.5.1, 3.5.2, 3.6.1.3, 3.6.2.3, 3.3.3.1)	Loss of load
DH1	Reactor Recirc Pump 2A Purge Seal Injection Valve B32-V22 (TS 3.4.1, 3.6.1.3, 3.3.3.1)	Loss of load
DH3	Normal Feed To RHR Shutdown Cooling Inboard Isolation Valve E11-F009 (TS 3.4.7, 3.4.8, 3.6.1.3, 3.3.3.1)	Loss of load
DF6	Drywell Spray Inboard Isolation Valve E11-F021A (TS 3.6.1.3, 3.3.3.1)	Loss of load
DE1	Service Water Vital Header Crosstie Valve SW-V118	Loss of load
DF7	RHR Torus Cooling Isolation Valve E11-F024A (TS 3.6.1.3, 3.6.2.3, 3.3.3.1)	Loss of load

Categories

K/A:	295021 A2.02	Tier / Group:	T1G1
RO Rating:	3.4	SRO Rating:	3.4
LP Obj:	CLS-LP-302-L*01A	Source:	NEW
Cog Level:	HIGH	Category 8:	Y

50. A spent fuel bundle has been dropped on the refuel floor. The following alarms are received:

PROCESS RX BLDG VENT RAD HIGH
PROCESS RX BLDG VENT RAD HI-HI

SCCP directs the operator to isolate Reactor Building HVAC and initiate SBGT.

Which one of the following is the reason for this action?

To maintain the Reactor Building pressure __(1)__ with respect to atmosphere and provide a(an) __(2)__ release point.

A. (1) positive
   (2) elevated

B.✓ (1) negative
   (2) elevated

C. (1) positive
   (2) ground level

D. (1) negative
   (2) ground level

Feedback

K/A: 295023 K3.03
Knowledge of the reasons for the following responses as they apply to REFUELING ACCIDENTS :
Ventilation isolation
(CFR: 41.5 / 45.6)

RO/SRO Rating: 3.3/3.6

Objective: CLS-LP-109-A*01d
1. Identify the following as related to a Refueling Accident:
   b. Analyzed plant response.
   d. Plant design features that mitigate the consequences of the accident.

Reference:
0OI-37.9

Cog Level: Low

Explanation:
From OI-37.9
If the reactor building ventilation exhaust radiation level is above 4 mR/hr, then the Reactor Building HVAC should have automatically isolated. This step ensures that a required automatic function has initiated. Confirming isolation of Reactor Building HVAC subsequent to receipt of a high radiation signal or a high temperature condition terminates any further release of radioactivity to the environment from this system.

SBGT is the normal mechanism employed under post transient conditions to maintain reactor building pressure negative with respect to the atmosphere since the exhaust from this system is processed and directed to an elevated release point before being discharged to the environment.
This question requires the operator to have knowledge of the reason for ventilation isolation as related to a refueling accident therefore matches the referenced KA statement. This KA statement is cross referenced to CFR 41.5

Distractor Analysis:
Choice A: Plausible because since reactor building is maintained at a negative pressure

Choice B: Correct Answer

Choice C: Plausible because since reactor building is maintained at a negative pressure and SBGT discharges to the main stack which is elevated

Choice D: Plausible because since SBGT discharges to the main stack which is elevated

SRO Only Basis: N/A

Notes

A high reactor building differential pressure is indicative of a potential loss of reactor building structural integrity and could result in uncontrolled release of radioactivity to the environment. Annunciator procedure UA-05 6-7 deals with loss of negative pressure and describes actions to remedy the situation. If the event is not caused by a malfunction of the Reactor Building HVAC System, the annunciator procedures will require entry into the SCCP. If an HVAC malfunction has caused the problem and negative pressure cannot be maintained by manipulating the Reactor Building HVAC System or starting SBGT, then the annunciator procedures will require entry into the SCCP. This will preclude entry into this procedure for problems with Reactor Building HVAC which can be immediately corrected by operator action or initiation of SBGT.

High reactor building ventilation exhaust radiation may indicate that radioactivity is being released to the environment when the system should have automatically isolated. The PROCESS RX BLDG VENT RAD HI annunciator procedure (UA-03 4-5) will direct the operator to the SCCP since the annunciator setpoint is the same as the EOP entry condition.

An area radiation level above its maximum normal operating level is an indication that water from a primary system (or from a primary to secondary system leak) may be discharging into the Reactor Building. The AREA RAD RX BLDG HIGH annunciator procedure (UA-03 2-7) provides for entry into the SCCP when entry condition levels for any areas are exceeded.

A HPCI, RHR, or Core Spray room water level above its maximum normal operating level (6 inches) is an indication that steam or water may be discharging into the Reactor Building. The annunciator procedures for HPCI, RHR, and Core Spray rooms FLOOD LEVEL HI and HI-HI (UA-12) will direct the operator to the SCCP. The HI level annunciator setpoints correspond to the entry conditions for this EOP.

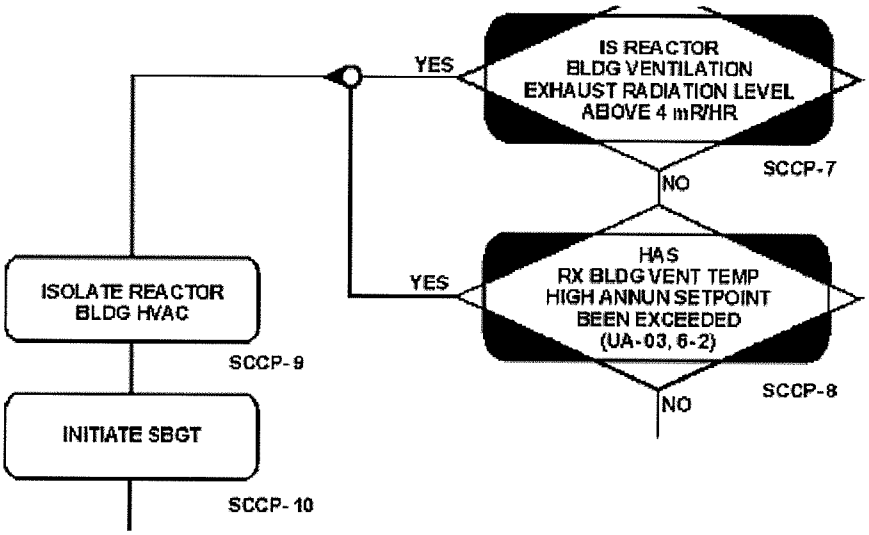

STEP BASES:

Since instrumentation to read the 135° F is not available, the operator is directed to use the annunciator (setpoint of 135° F).

If the reactor building ventilation exhaust radiation level is above 4 mR/hr, then the Reactor Building HVAC should have automatically isolated. This step ensures that a required automatic function has initiated. Confirming isolation of Reactor Building HVAC subsequent to receipt of a high radiation signal or a high temperature condition terminates any further release of radioactivity to the environment from this system.

SBGT is the normal mechanism employed under post transient conditions to maintain reactor building pressure negative with respect to the atmosphere since the exhaust from this system is processed and directed to an elevated release point before being discharged to the environment.

A or B - Isolates the remaining Group 6 isolation valves not listed under A or B above.

4.3.12 Refueling Operations and Accidents

Refueling operations require Reactor Building HVAC to be in operation to maintain a clean and relatively dry atmosphere on the refuel floor. Failure of the RB HVAC System would cause the refuel floor humidity and temperature to rise. The loss of air flow across the top of the pools would allow contamination from evaporation and diffusion of gases to contaminate the refuel floor.

A refueling accident of sufficient size will cause the Reactor Building Exhaust Rad Monitors to increase. At 4 mr/hr the RB HVAC System will isolate and SBGT will start. Refuel Floor monitors have no isolation input to RB HVAC.

4.3.13 Primary Containment

The Primary Containment and RB HVAC interface through the SBGT System and the Primary Containment Purge subsystem. The only failures of RB HVAC that would affect the Primary Containment would be mechanical failures of the duct work. Depending on the location of the failure, it would either prevent the Containment Purge System from functioning or exhaust the containment into the Reactor Building.

4.2.2 Secondary Containment Isolation Mode

The secondary containment isolation mode is normally initiated automatically as a result of the SBGT System receiving an automatic start signal.

When this occurs the supply and exhaust air fans are tripped, the Reactor Building ventilation isolation dampers close, the purge exhaust fans trip and their dampers close if in operation. Both SBGT trains will start and continue to maintain the negative pressure inside the Reactor Building.

A failure to isolate when required could lead to a ground level release of radioactivity.

4.2.3 Abnormal Operating Conditions

While not abnormal operating relationships, conditions may occur periodically that may result in abnormal operating conditions. Some are discussed below.

1. Extremely Low Outside Temperatures

Extremely low outside temperature can cause problems with components located within the Reactor Building as there is no heating system available for the Reactor Building. Reactor Building temperature can be controlled to an extent by varying the flow rate of the supply and exhaust fans or limiting the number of supply and exhaust fans running. The requirements for maintenance of a negative pressure in the Reactor Building must be maintained as required by operational conditions. If temperatures in the Reactor Building drop below 40°F, Conduct of Ops Manual, 0OI-1.02, directs contacting engineering to evaluate equipment operability.

PROCESS RX BLDG VENT RAD HI-HI

AUTO ACTIONS

1. Reactor Building ventilation system trips and isolates.
2. Standby gas treatment trains start.
3. If open, the inboard and outboard primary containment purge and vent valves close.
4. PASS sample valves to torus close.

CAUSE

1. High airborne activity levels in the Reactor Building exhaust plenum.
2. Circuit malfunction.

OBSERVATIONS

1. Reactor Building exhaust plenum rad monitor indicates greater than 4 mR/hr on Panel H12-P606.
2. PROCESS RX BLDG VENT RAD HIGH (UA-03 4-5) alarm.

ACTIONS

1. Verify auto actions.
2. Refer to AOP-05.0, Radioactive Spills, High Radiation, and Airborne Activity.
3. Enter EOP-03-SCCP, Secondary Containment Control.
4. Refer to EOP-04-RRCP, Radiological Release Control; enter as appropriate.
5. If a circuit malfunction is suspected, ensure that a Trouble Tag is prepared.

DEVICE/SETPOINTS

Rad Monitor D12-RM-K609A/B	4 mR/hr

POSSIBLE PLANT EFFECTS

1. Possible release to environs in excess of ODCM 7.3.7.
2. This annunciator is required to be operable to support Rx Bldg Vent Rad Monitor operability; annunciator inoperability will result in a LCO.

REFERENCES

1. LL-9353 - 35
2. AOP-05.0, Radioactive Spills, High Radiation, and Airborne Activity
3. EOP-03-SCCP
4. EOP-04-RRCP
5. Technical Specifications 3.3.6.1, Table 3.3.6.1-1 Function 2d and 3.3.6.2, Table 3.3.6.2-1 Function 3
6. ODCM 7.3.7

PROCESS RX BLDG VENT RAD HIGH

AUTO ACTIONS

NONE

CAUSE

1. High airborne activity in Reactor Building ventilation exhaust plenum.
2. Circuit malfunction.

OBSERVATIONS

1. Reactor Building Vent Rad Recorder D12-RR-R605 Channel A or B indicates high radiation level.
2. Reactor Building Exhaust Plenum Rad Monitor Channel A or B indicates greater than 3 mR/hr on Panel H12-P606.

ACTIONS

1. Enter EOP-03-SCCP, Secondary Containment Control.
2. Refer to AOP-05.0, Radioactive Spills, High Radiation, and Airborne Activity.
3. If a circuit malfunction is suspected, ensure that a Trouble Tag is prepared.

DEVICE/SETPOINTS

D12-RR-R605 red or black pen	3 mR/hr

POSSIBLE PLANT EFFECTS

1. Possible release to environs.
2. If airborne activity increases to 4 mR/hr, Reactor Building HVAC isolation, a Group 6 isolation, drywell purge isolation, and initiation of the Standby Gas Treatment System will occur.

REFERENCES

1. LL-9353 - 35
2. AOP-05.0
3. EOP-03-SCCP
4. Plant Modification 85-081

Categories

K/A:	295023 K3.03	Tier / Group:	T1G1
RO Rating:	3.3	SRO Rating:	3.6
LP Obj:	CLS-LP-109-A*01D	Source:	BANK
Cog Level:	LOW	Category 8:	Y

51. Following a loss of feedwater, HPCI initiated on low reactor water level then tripped on high reactor water level.
Current plant conditions are:

Reactor water level	180 inches, steady
HPCI TURB TRIP	alarm is sealed in
HPCI TURB TRIP SOL ENER	alarm is sealed in
HPCI Initiation Signal/Reset seal in white light	is LIT
HPCI High Water Level Signal Reset white light	is LIT

Which one of the following identifies the impact on the HPCI System if drywell pressure rises to 3.0 psig with the above conditions present?

HPCI will initiate and inject to the reactor:

A. with no operator action.

B. only if the injection valve is manually opened.

C. only if the High Water Level Signal Reset push button is depressed.

D. only if the injection valve is manually opened after the High Water Level Signal Reset push button is depressed.

Feedback

K/A: 295024G 2.02.37
Ability to determine operability and/or availability of safety related equipment.
High Drywell Pressure
(CFR: 41.7 / 43.5 / 45.12)

RO/SRO Rating: 3.6/4.6

Objective: LOI-CLS-LP-019-A*03M

Reference:
SD-19, Revision 16, Page 33, Section 3.5

Cog Level: High

Explanation:
A Reactor High Water Level trip is initiated and the signal seals-in when a high level is sensed by two instruments. Once the high level condition clears, the trip is reset by a subsequent Reactor Low Level 2 signal or upon depressing the Panel P601 High Level Trip Reset pushbutton. A High Drywell Pressure Initiation signal will not reset the High Water Level trip.

Distractor Analysis:
Choice A: Plausible because the high water level trip does automatically reset on LL2. If high water level is reset with an initiation signal (Hi DW Press), the system automatically aligns for injection without operator actions.

Choice B: Plausible because the high water level trip does automatically reset on LL2. Injection valve requires active initiation condition + Stop Valve (V8) & Steam Supply Valve (F001) not full closed to automatically open. Relay timing has caused HPCI initiation with injection valve not opening (LER 2-90-015).

Choice C: Correct Answer

Choice D: Plausible because high water level does not automatically reset due to Hi DW Press. Injection valve requires active initiation condition + Stop Valve (V8) & Steam Supply Valve (F001) not full closed to automatically open. Relay timing has caused HPCI initiation with injection valve not opening (LER 2-90-015)

SRO Only Basis: N/A

Notes

3.2 HPCI System Automatic Initiation Control (Figure 19-6)

The HPCI System is automatically initiated in response to a Reactor Low Level Two or a High Drywell Pressure signal, as shown below. There are four trip units for each parameter sensed, with two of the trip units from ECCS Logic Division I and two from ECCS Logic Division II. The four trip units for each parameter are arranged in a one-out-of-two-taken-twice logic.

Table 19-5 - HPCI Initiation Setpoints

Signal	Setpoint*	Tech Spec*
Reactor Low Level Two	105"	≥101"
High Drywell Pressure	1.7 psig	≤1.8 psig

* All setpoints shown in this SD are the nominal values of process at instrument actuation. Setpoints are as identified in the applicable APPs and the EOP Users Guide. Tolerance and scaling (including head correction) information is available from EDBS or calibration procedures. When a Tech Spec value is listed, this is actually the Technical Specification Allowable Value information.

Valve E41-F006 will automatically open on a HPCI System initiation signal if both the Turbine Stop Valve, E41-V8, and the Turbine Steam Supply Valve, E41-F001, are not fully closed. This valve will automatically close if either the Turbine Stop Valve or the Turbine Steam Supply Valve is fully closed. HPCI Injection Valve, E41-F006 may also be opened or closed from the Control Room using its control switch on Panel P601; however, once the valve reaches its open or closed limit switch, the valve will respond to the appropriate automatic open or close signals discussed above.

The configuration of the automatic opening circuitry for E41-F006 can lead to a condition where the HPCI System automatically initiates but the HPCI Injection Valve does not open. Electrical and hydraulic transients have occurred in the plant which were sufficient enough to generate a momentary Reactor Low Level 2 signal. This signal automatically initiated the HPCI System but, prior to the Turbine Stop Valve and the Turbine Steam Supply Valve opening to permit E41-F006 to automatically open, the Reactor Low Level 2 condition cleared. This resulted in the HPCI Turbine running on minimum flow with the injection valve closed. (Refer to LER 2-90-015).

3.5 HPCI Turbine Trip Control (Figures 19-25 and 26)

The HPCI turbine will automatically shutdown (Turbine Stop Valve closes) upon receipt of one of the signals listed in Table 19-7, below.

Table 19-7 - HPCI Trips

Signal	Setpoint	Tech Spec
Turbine Overspeed	4600 rpm ±150 rpm(110% of original rated speed - 4000 rpm)	N/A
Reactor High Water Level	206"	≤207"
HPCI Pump Low Suction Pressure	15 inches after 13 sec. time delay	N/A
Turbine High Exhaust Pressure	157.5 psig	N/A
HPCI System Isolation	See Table 19-8	See Table 19-8
Manual Trip	N/A	N/A
Low Steam Line Pressure*	115 psig	≥104 psig

There is no seal in of the turbine trips, except for the trips caused by Reactor High Water Level and isolation, thus the operator must be alert to conditions that could lead to the turbine tripping and then resetting when the trip condition clears. This could be repeated until equipment damage occurs.

A Turbine Trip pushbutton, on Panel P601, which also energizes the remote-operated solenoid oil dump valve (E41-C002-SV1) as discussed above, may be used to shut down the turbine.

A Reactor High Water Level trip is initiated and the signal seals-in when a high level is sensed by two instruments, both powered from 125 VDC Bus. Once the high level condition clears, the trip is reset by a subsequent Reactor Low Level 2 signal or upon depressing the Panel P601 High Level Trip Reset pushbutton. A High Drywell Pressure Initiation signal will not reset the High Water Level trip.

During a HPCI Turbine start, pump suction pressure could possibly drop below the trip initiation setpoint. For this reason, a 13 second time delay has been added to prevent spurious trips upon system initiation.

HPCI TURB TRIP

AUTO ACTIONS

1. If the HPCI turbine trips, the following occurs:
   a. If open, the Turbine Stop Valve, E41-V9, trips closed.
   b. If open, the HPCI Injection Valve, E41-F006, closes.
   c. If open, the Minimum Flow Bypass To Torus Valve, E41-F012, closes.
2. If the HPCI turbine isolates, the following occurs:
   a. If open, the Steam Supply Inboard Isolation Valve, E41-F002, closes.
   b. If open, the Steam Supply Outboard Isolation Valve, E41-F003, closes.
   c. If open, the Turbine Stop Valve, E41-V9, closes.
   d. If open, the HPCI Injection Valve, E41-F006, closes.
   e. If open, the Minimum Flow Bypass To Torus Valve, E41-F012, closes.
   f. If open, the Torus Suction Valve, E41-F041, closes.
   g. If open, the Torus Suction Valve, E41-F042, closes.

CAUSE

1. High reactor vessel water level (206 inches).
2. Mechanical overspeed trip (4600 rpm).
3. High turbine exhaust pressure (157.5 psig).
4. Low HPCI pump suction pressure (15 inches Hg vacuum after 13 second time delay).
5. High turbine exhaust diaphragm pressure (7 psig).
6. High steam line differential pressure.
7. Low steam supply pressure (115 psig).
8. High HPCI room area ambient temperature (165°F).
9. High HPCI steam line area ambient temperature (190°F).
10. High HPCI steam line tunnel temperature (165°F).
11. High HPCI steam line area differential temperature (47°F).
12. Turbine trip push button.
13. Circuit malfunction.

OBSERVATIONS

> **NOTE:** Once the turbine trips, exhaust pressure and suction pressure will return to zero or a positive value.

1. Reactor vessel water level greater than 206 inches (multiple RTGB indications).
2. Turbine speed.
3. Turbine exhaust pressure greater than 157.5 psig (E41-PI-R603).

1. If in an accident status, utilize the RCIC System per OP-16 to maintain reactor vessel level.
2. If the reactor vessel water level drops back to 105 inches, and it is desired to recommence HPCI injection, perform the following steps:
   a. Reset the high water level shutdown feature by depressing the High Water Level Signal Reset Push Button, E41-S25.
   b. Verify that the Turbine Stop Valve, E41-V9, reopens and that HPCI System restarts per OP-19.
3. If the reactor vessel water level is stable and the HPCI System is no longer required for operation, shut down the HPCI System per OP-19.

HPCI TURB TRIP SOL ENER

AUTO ACTIONS

1. If open, the Turbine Stop Valve, E41-V8, closes.

CAUSE

1. High reactor vessel water level (206 inches).
2. Mechanical overspeed trip (4600 rpm).
3. High turbine exhaust pressure (157.5 psig).
4. Low HPCI pump suction pressure (15 inches Hg vacuum).
5. High turbine exhaust diaphragm pressure (7 psig).
6. High steam line differential pressure.
7. Low steam supply pressure (115 psig).
8. High HPCI room area ambient temperature (165°F).
9. High HPCI steam line area ambient temperature (190°F).
10. High HPCI steam line tunnel temperature (165°F).
11. High HPCI steam line area differential temperature (47°F).
12. Turbine trip push button.
13. Circuit malfunction.

OBSERVATIONS

1. Turbine Stop Valve, E41-V8, closed.

ACTIONS

1. If the turbine tripped or isolated, refer to APP A-01 3-1.
2. If a circuit malfunction is suspected, ensure that a WR/WO is prepared.

DEVICE/SETPOINTS

HPCI Auxiliary Relay E41-K12	Energized
Level Transmitter Master Trip Unit B21-LTM-N017B-2 and D-2	206 inches
Turbine speed	4600 rpm
Turbine Exhaust Pressure Switch E41-PS-N017A and N017B	157.5 psig
HPCI Pump Suction Pressure Switch E41-PS-N010	15 inches Hg vacuum (after 13 second time delay)
Turbine Exhaust Diaphragm Pressure E41-PSH-N012A thru D	7 psig
Steam Flow Differential Pressure Master Trip Unit E41-PDTM-N004-1	-95.6 inches of water (includes -26.7 in. head correction)

Categories

K/A:	295024G 2.02.37	Tier / Group:	T1G1
RO Rating:	3.6	SRO Rating:	4.6
LP Obj:		Source:	NEW
Cog Level:	HIGH	Category 8:	Y

52. A Loss of Off-site Power (LOOP) occurs on Unit One following operation at rated power for the last 18 months.

The RSP directs the following step:

STABILIZE PRESS BELOW 1050 PSIG WITH ONE OR MORE OF THE FOLLOWING SYSTEMS:

* MAIN TURBINE BYPASS VALVES
* MAIN STEAM LINE DRAINS
* RCIC
* HPCI
* SRV - IF A CONTINUOUS PNEUMATIC SUPPLY IS AVAILABLE USE OPENING SEQUENCE

039

Which one of the following identifies the system or combination of systems which will provide sufficient steam flow to stabilize reactor pressure initially (within the first 10 minutes) following the event and why 2 hours later this decision will be different regardless of Off-site power status?

__(1)__ have the capacity to stabilize pressure immediately following the event. 2 hours later __(2)__.

A. (1) Only SRVs
   (2) sufficient time has been available to allow use of MSL Drains

B. (1) Only SRVs
   (2) decay heat generation has significantly lowered to within the capacity of HPCI

C. (1) HPCI and RCIC combined
   (2) sufficient time has been available to allow use of MSL Drains

D. (1) HPCI and RCIC combined
   (2) decay heat generation has significantly lowered to within the capacity of HPCI

Feedback

K/A: 295025 A2.05
Ability to determine and/or interpret the following as they apply to HIGH REACTOR PRESSURE:
Decay heat generation
(CFR: 41.10 / 43.5 / 45.13)

RO/SRO Rating: 3.4/3.6

Objective: CLS-LP-19*22c (16*16c)
22. Given plant conditions, predict how a loss or malfunction of the HPCI System will affect the following:
c. Ability to remove decay heat
16. Given plant conditions, predict how a loss or malfunction of the RCIC System will affect the following:
c. Ability to remove decay heat.

Reference:
0OI-37.3, Revision 10, Page 34, Section

Cog Level: High

Explanation:
The amount of decay heat added depends on the power history of the reactor and the amount of time since the reactor was shut down. The number of fissions that have occurred determines the number of fission fragments in the core. Initial Decay Heat generation is equivalent to approximately 7% (beyond the capacity of HPCI) of the equilibrium power prior to the scram. 1 hour following the scram, Decay Heat generation is equivalent to approximately 1% power (within the capacity of HPCI and maybe RCIC).

Distractor Analysis:
Choice A: Plausible because only SRVs is correct and the use of MSL drains is desired but is dependent upon Off-site power availability (CWIPs needed to allow the main condenser to be available as a heat sink), Group 1 isolation signal remains due to low condenser vacuum with no 1OP-25 or EOP guidance to bypass and reset the isolation signal. Reopening MSIVs would not be procedurally allowed due to Cond/FW and CW systems not having power.

Choice B: Correct Answer

Choice C: Plausible because HPCI and RCIC combined capacity is below 7% and the use of MSL drains is desired but is dependent upon Off-site power availability (CWIPs needed to allow the main condenser to be available as a heat sink), Group 1 isolation signal remains due to low condenser vacuum with no 1OP-25 or EOP guidance to bypass and reset the isolation signal. Reopening MSIVs would not be procedurally allowed due to Cond/FW and CW systems not having power.

Choice D: Plausible because HPCI and RCIC combined capacity is below 7% and decay heat generation lowering is correct.

SRO Only Basis: N/A

Notes

STEP 039

STABILIZE PRESS BELOW 1050 PSIG WITH ONE OR MORE OF THE FOLLOWING SYSTEMS:

* MAIN TURBINE BYPASS VALVES
* MAIN STEAM LINE DRAINS
* RCIC
* HPCI
* SRV - IF A CONTINUOUS PNEUMATIC SUPPLY IS AVAILABLE USE OPENING SEQUENCE

039

STEP 039 (continued)

When manual SRV actuation is required for reactor pressure control, an opening sequence is preferred which distributes heat uniformly throughout the Suppression Pool to avoid high local pool temperatures which may result in inefficient pool cooling. The opening sequence also uniformly distributes the total number of SRV actuations among the total number of SRVs.

Use of steam driven pumps (i.e., HPCI, RCIC, and RFP) to augment reactor pressure control may be required. These systems do not draw a significant amount of steam but may be sufficient to control reactor pressure increases, or in conjunction with other systems may assist in controlling reactor pressure. Suction for HPCI and RCIC, in the pressure control mode, is always to be aligned to the condensate storage tank (CST). Use of auxiliary systems and lineups may be required to keep water in the CST.

1.3 General Description (Figure 16-1)

Following a reactor scram, steam generation will continue due to the fission product decay heat. Normally, the Main Turbine Bypass System will divert the steam to the main condenser, and the Feedwater System will supply the makeup water required to maintain reactor vessel inventory.

In the event the reactor vessel is isolated due to Main Steam Isolation Valve (MSIV) closure, the relief valves will maintain pressure in the vessel within acceptable limits. The isolation of the reactor vessel will disable the Feedwater System since the steam required for the operation of the reactor feed pump turbines is supplied from the main steam lines. Due to the continuous steam generation and discharge through the relief valves, water level in the reactor vessel will decrease. To maintain reactor vessel inventory, the RCIC System may be used for injection to compensate for this loss in makeup water. The RCIC System also helps to depressurize the vessel by using decay heat steam from the vessel to operate the RCIC Turbine and by returning cooler water to the reactor vessel.

The RCIC System consists of a 100 percent capacity steam turbine driven pump, with associated piping, valves, instrumentation, controls, and accessories. The system is capable of delivering makeup water to the reactor vessel under rated pressure conditions. The RCIC System has a capacity approximately equal to the reactor water boil-off rate 15 to 20 minutes after shutdown. All components necessary for initiating operations of RCIC are completely independent of auxiliary or emergency AC power, plant service air, and external cooling water systems, and require only DC power from the station batteries, therefore providing a high degree of assurance that RCIC will operate when required.

The loss of feedwater evaluation for the 105% Power Uprate relied on RCIC operating alone with 360 gpm of makeup starting 60 seconds after initiation. For some loss of feedwater events, indicated water level may drop below the LL3 setpoint, resulting in MSIV closure, ADS timer start, and a low pressure ECCS start signal. Even though LL3 actuations may occur, operators are expected to inhibit ADS and allow RCIC to restore level. The lowest expected level inside the shroud would be no less than 4.7 ft above the top of active fuel. This is considered acceptable since ADS blowdown and low pressure ECCS injection are not required to provide adequate core cooling.

The horsepower demand on the turbine is a function of the requirements to drive the pumps. Therefore, the steam drawn by the turbine can be regulated by adjusting the power used by the pumps. This relationship is used when the HPCI System is operated in the Test/Pressure Control Mode to remove decay heat from the Reactor. By regulating the load on the pumps (i.e., adjusting pump discharge pressure by throttling the test return valve and/or adjusting flow), the amount of decay heat removed from the Reactor can be controlled. Design data for the turbine is shown in Table 19-2, below.

Table 19-2 - HPCI Turbine Design Data	
Type	Variable speed, noncondensing turbine
Rated Speed	4100 rpm
Rated Steam Inlet conditions	135 psig to 1250 psig 358 °F to 575 °F
Exhaust Pressure	200 psig max 50 psig design operating 15 - 30 psig nominal operating

Turbine Steam flow data based on pump speeds and required power for 4250 gpm discharge flows.			
Pump Head	Speed	Brake Horsepower	Steam Flow
525 ft	2100 rpm	750 bhp	83,000 lbm/hr
2712 ft	3940 rpm	3850 bhp	178,000 lbm/hr
2800 ft	3995 rpm	4000 bhp	182,000 lbm/hr
2823 ft	4015 rpm	4050 bhp	184,000 lbm/hr
2970 ft	4100 rpm	4350 bhp	191,000 lbm/hr

2.2.2 **Piping and Valves** (Figure 19-2)

Steam to drive the turbine is supplied from Main Steam Line "A", upstream of the Main Steam Isolation Valves, through the Steam Supply Inboard and Outboard Isolation Valves, E41-F002 and E41-F003, respectively. The Steam Supply Isolation Valves, like the HPCI Pump Suppression Pool Suction Valves, E41-F042 and F041, are PCIS Group 4 Isolation Valves which receive automatic isolation signals. The

Figure 8-9 plots decay heat following a reactor shutdown.

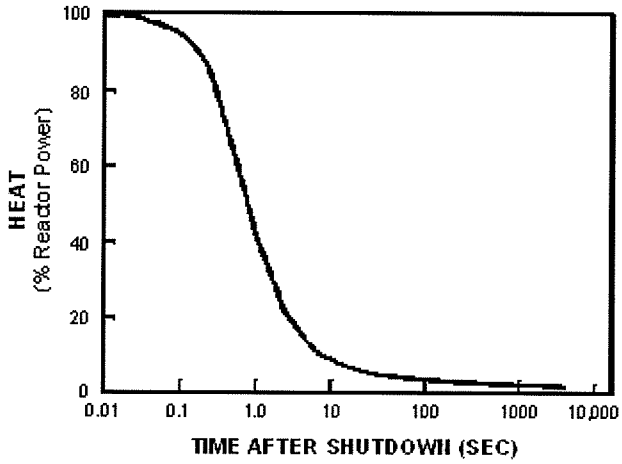

Figure 8-9 Decay Heat vs. Time after Shutdown

X. DECAY HEAT PRODUCTION (Figure 7)

Decay heat is thermal energy produced by the decay of fission products. The energy carried by the beta and gamma radiation emitted by fission products is rapidly converted to thermal energy as the radiation reacts with the surrounding medium. It amounts to approximately 7% of the energy produced in fission.

STUDENT HANDOUT

Even though the neutron chain reaction is abruptly halted following a scram, decay energy continues to be produced in large quantities. Immediately following the shutdown of the reactor, the decay heat amounts to approximately 7% of full power. Even after several hours the decay heat is produced at a rate of about 1% of full power.

A quantitative estimate of decay heat was first given by Wigner and Way in 1948. Their formula follows:

$$P_c(t) = 0.0622\ P_o\ [t_o - (t_o + t)]$$

where: $P_c(t)$ is power generation due to beta and gamma rays
P_o is reactor power before shutdown
t_o is time of power operation before shutdown (sec), and
t is time elapsed since shutdown (sec)

If adequate cooling is not provided following reactor shutdown, the decay heat causes overheating and eventual melting of the reactor fuel. This in turn leads to the release of the more volatile fission products.

Decay heat varies linearly with power before shutdown. The higher the power before shutdown, the more decay heat will be produced at a given time after shutdown. Of course, time spent at a given power level is important too! If the reactor was at 100% power for several days, then decreased to 15% for a short time before shutdown, we must consider the time spent at each level. Credit for time at each level is given through the t_o parameter. The amount of decay heat produced decreases with time after shutdown.

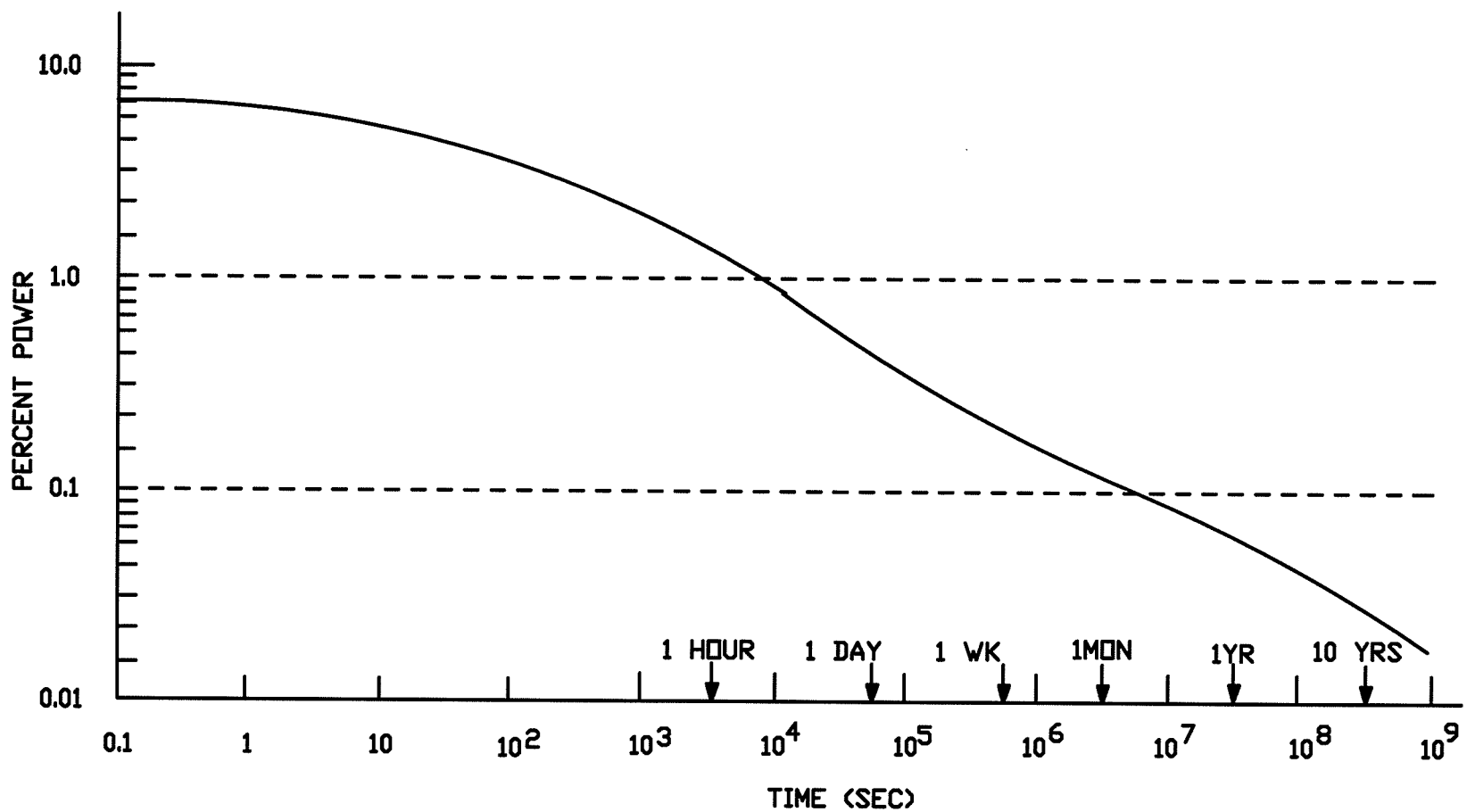
10.0
1.0
0.1
0.01
PERCENT POWER
1 HOUR
1 DAY
1 WK
1MON
1YR
10 YRS
0.1
1
10
10^2
10^3
10^4
10^5
10^6
10^7
10^8
10^9
TIME (SEC)

Categories

K/A:	295025 A2.05	Tier / Group:	T1G1
RO Rating:	3.4	SRO Rating:	3.6
LP Obj:	CLS-LP-19*22C	Source:	NEW
Cog Level:	HIGH	Category 8:	Y

53. An ATWS has occurred on Unit One with the following plant conditions:

Reactor power	3%, slowly lowering
RPV water level	+60 inches, steady
RPV pressure	300 psig
Drywell pressure	3.0 psig
Suppression pool temp	108°F

Which one of the following identifies the RHR logic requirement(s), if any, to place Suppression Pool Cooling in service under the current plant conditions?

Suppression Pool Cooling is placed in service:

A. without the use of any overrides.

B. only by placing the Think Switch to Manual.

C. only by placing the Think Switch to Manual followed by bypassing the 2/3rd core height & LPCI interlocks.

D. only by bypassing the 2/3rd core height & LPCI interlocks followed by placing the Think Switch to Manual.

Feedback

K/A: 295026 A1.01
Ability to operate and/or monitor the following as they apply to SUPPRESSION POOL HIGH WATER TEMPERATURE:
Suppression pool cooling
(CFR: 41.7 / 45.6)

RO/SRO Rating: 4.1/4.1

Objective: LOI-CLS-LP-017-A*009
Given an RHR pump or valve, list the interlocks, permissives and/or automatic actions associated with the RHR pump or valve, including setpoints.

Reference:
1OP-17, Revision 97, Page 282, Attachment 8

Cog Level: High

Explanation:
Suppression Pool temperature and DW pressure are elevated, along with RPV water level above LL3 (+45 inches). With no LOCA signal present, RHR can be placed in SPC without the use of any logic overrides / bypasses. Use of SPC Hardcard is required to place RHR in SPC during EOPs. RO needs to recognize no LOCA signal present for the stated conditions and that making-up the SPC/Spray logic is not required.

Distractor Analysis:
Choice A: Plausible because if the LOCA signal was not present this would be correct.

Choice B: Correct Answer.

Choice C: Plausible because incorrect recognition of LOCA signal conditions and wrong order of Cooling/Spray logic switch manipulation.

Choice D: Plausible because incorrect recognition of LOCA signal conditions and correct order of Cooling/Spray logic switch manipulation.

SRO Only Basis: N/A

3.2.4 Containment Cooling Logic, (Figures 17-11 and 17-12)

Containment Cooling logic was modified to allow Suppression Pool Cooling to be placed in service with a LPCI initiation signal present when Drywell pressure is below a 2.7 psig permissive. This allows operators to perform Suppression Pool Cooling during an Anticipated Transient Without Scram (ATWS) event when level is lowered below the LPCI initiation setpoint.

Placing Suppression Pool Cooling (E11-F028A(B) and E11-F024A(B)) in service with a LPCI initiation signal present requires:

- Reactor water level above 2/3 core height,

OR

- The 2/3 Core Height LPCI Initiation Override keylock switch be placed in MANUAL OVERRIDE,

AND

- The Containment Spray Valve Control (THINK) switch, S17B, be placed in MANUAL.

FIGURE 17-12
Cooling/Spray Permissive Logic

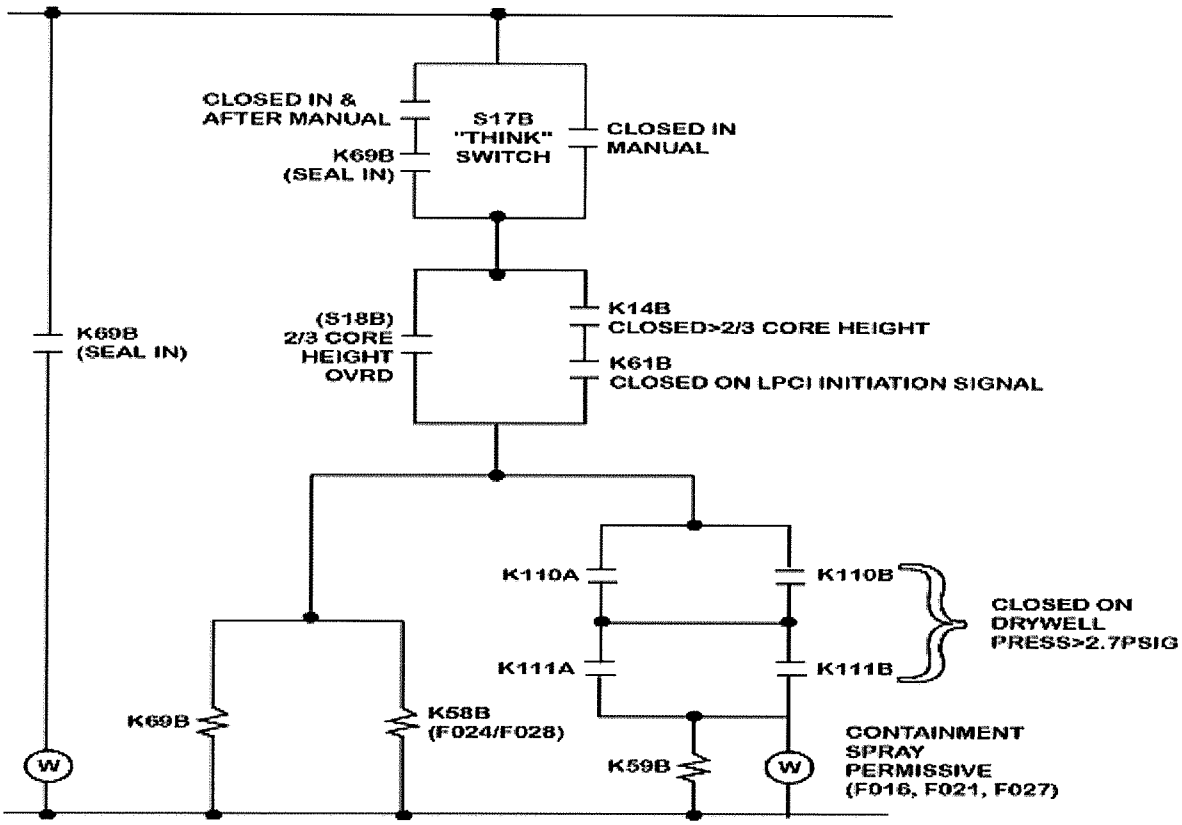

Categories

K/A:	295026 A1.01	Tier / Group:	T1G1
RO Rating:	4.1	SRO Rating:	4.1
LP Obj:	LOI-CLS-LP-017-A*009	Source:	NEW
Cog Level:	HIGH	Category 8:	Y

54. Which one of the following identifies:
(1) when a reactor scram due to Drywell Average Temperature is required IAW PCCP and
(2) the reason the reactor scram is required?

A. (1) before 300°F
(2) tripping the recirc pumps

B. (1) before 300°F
(2) locking out the drywell coolers

C. (1) cannot be restored and maintained below 300°F
(2) tripping the recirc pumps

D. (1) cannot be restored and maintained below 300°F
(2) locking out the drywell coolers

Feedback

K/A: 295028 K3.05

Knowledge of the reasons for the following responses as they apply to HIGH DRYWELL TEMPERATURE :

Reactor SCRAM

(CFR: 41.5 / 45.6)

RO/SRO Rating: 3.6/3.7

Objective: CLS-LP-300-L*005g

5. Given the Primary Containment Control Procedure, determine the appropriate operator actions if any of the following limits are approached or exceeded:
   g. Drywell Design Temperature Limit

Reference:

0OI-37.8, Revision 4, Page 21, STEPS DW/T-09 through DW/T-17

Cog Level: Low

Explanation:

A reactor scram is inserted once it has been determined that drywell temperature cannot be maintained below 300°F and DW Spray is required. In order to spray the DW, the Reactor Recirculation Pumps and DW Coolers need to be secured. The reactor is not allowed operation at power without Recirculation Pumps in service. The scram requirement step satisfies shutting down the reactor to support tripping the Recirculation pumps.

Distractor Analysis:

Choice A: Correct Answer

Choice B: Plausible because 300°F Drywell temperature is correct. Locking out the DW coolers is an action in the DW spray procedure but is not the reason for scramming the reactor..

Choice C: Plausible because not being able to restore and maintain below 300°F Drywell temperature means exceeding 300°F is allowed without scram but is the step requiring emergency depressurization and tripping the recirc pumps is correct.

Choice D: Plausible because not being able to restore and maintain below 300°F Drywell temperature means exceeding 300°F is allowed without scram but is the step requiring emergency depressurization and Locking out the DW coolers is an action in the DW spray procedure but is not the reason for scramming the reactor.

SRO Only Basis: N/A

Notes

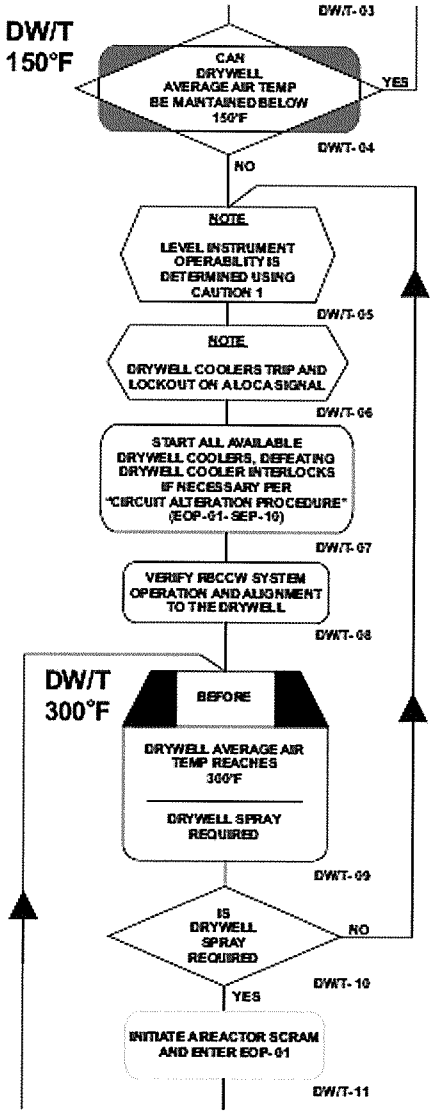
DW/T
150°F
DW/T-03
CAN DRYWELL AVERAGE AIR TEMP BE MAINTAINED BELOW 150°F
YES
DW/T-04
NO
NOTE
LEVEL INSTRUMENT OPERABILITY IS DETERMINED USING CAUTION 1
DW/T-05
NOTE
DRYWELL COOLERS TRIP AND LOCKOUT ON ALOCA SIGNAL
DW/T-06
START ALL AVAILABLE DRYWELL COOLERS, DEFEATING DRYWELL COOLER INTERLOCKS IF NECESSARY PER "CIRCUIT ALTERATION PROCEDURE" (EOP-01-SEP-10)
DW/T-07
VERIFY RBCCW SYSTEM OPERATION AND ALIGNMENT TO THE DRYWELL
DW/T-08
DW/T
300°F
BEFORE
DRYWELL AVERAGE AIR TEMP REACHES 300°F
DRYWELL SPRAY REQUIRED
DW/T-09
IS DRYWELL SPRAY REQUIRED
NO
DW/T-10
YES
INITIATE A REACTOR SCRAM AND ENTER EOP-01
DW/T-11

STEPS DW/T-09 through DW/T-17 (continued)

e. The sensitivity of the pump to operation beyond the limit

f. The consequences of *not* operating the pump beyond the limit

Immediate and catastrophic failure is not expected if a pump is operated beyond the NPSH or vortex limit.

The initiation of drywell sprays is conditioned on the following restrictions on the plant. The recirculation pumps and drywell cooling fans are required to be secured prior to the initiation of drywell sprays. These actions are covered in EOP-01-SEP-02. Since reactor operation at power is not allowed or desired without recirculation pumps in service and is restricted in time for temperatures above 150°F, a step has been added to scram the reactor and enter into EOP-01.

Another restriction on the initiation of drywell sprays is for suppression pool water level to be below +21 inches. This provides protection for the operation of the suppression chamber-to-drywell vacuum breakers. The vacuum breakers will not function as designed if any portion of the valve is covered with water. The specified water level assures that no portion of the drywell side of the valve is submerged for any drywell below wetwell differential pressure less than or equal to the valve opening differential pressure. Spray operation with vacuum breakers inoperable (i.e., with no drywell vacuum relief capability) may cause the containment differential pressure capability to be exceeded and is therefore not permitted.

Step DW/T-16 assures adequate core cooling takes precedence over initiating drywell spray in this case since catastrophic failure of the primary containment is not expected under the conditions for which spray requirements are established. The wording of the step does permit alternating between reactor vessel injection and drywell spray modes as the need for each occurs, provided adequate core cooling can be maintained.

Drywell sprays are secured if drywell pressure drops to 2.5 psig. This is a backup step to the automatic securing of the sprays during a LOCA condition when the spray permissive interlock drops out. This precludes air from being drawn in through the vacuum relief system to de-inert the primary containment and also provides a positive margin to the negative design pressure of the primary containment.

The drywell sprays are actuated in accordance with EOP-01-SEP-02.

Categories

K/A:	295028 K3.05	Tier / Group:	T1G1
RO Rating:	3.6	SRO Rating:	3.7
LP Obj:	CLS-LP-300-L*005G	Source:	NEW
Cog Level:	LOW	Category 8:	Y

55. The Safety Parameter Display System (SPDS) Plant Status Matrix indicates Suppression Pool level is -31.5 inches.

Which one of the following identifies the color code displayed by SPDS due to Suppression Pool level?

SPDS Suppression Pool level color code is:

A. Green

B. Yellow

C. Red

D. Cyan

Feedback

K/A: 295030 K2.09

Knowledge of the interrelations between LOW SUPPRESSION POOL WATER LEVEL and the following:

SPDS/ERFIS/CRIDS/GDS: Plant-Specific

(CFR: 41.7 / 45.8)

RO/SRO Rating: 2.5/2.8

Objective: CLS-LP-060*002

02. Describe the basic operation of the ERFIS/SPDS Computer:
    e. Monitor Display Color Code
03. Describe the information on the Critical Plant Matrix.
04. Describe the methods used to do the following on the ERFIS/SPDS Computer:
    a. Evaluate EOP entry conditions.

Reference:

1(2)OP-, Revision , Page , Section

SD-60 Rev.2, ERFIS DATA ACQUISITION, PROCESSING, AND DISPLAY

Cog Level: Low

Explanation:

Requires RO to know Tech Spec required Suppression Pool water level of ≥ -31 inches and ≤ -27 inches and that PCCP entry condition is SP level below -31" or above -27" (i.e. -31.2 or -26.8).

Knowing the specific level at which the display turns yellow just informs the operator that it is approaching the High/Low alarm (TS Limits).

SPDS display will be green when SP level is < -27.5" and > -30.5" the indication will turn yellow above -27.5" or below -30.5" until the limit of -27" or -31" is reached at which time the code turns red. The red code alerts the operator of possible PCCP entry condition. AOP-14 must be exited under these conditions.

Distractor Analysis:

Choice A: Plausible because -31.5 is easily confused due to being a negative number which combined with greater than or equal signs make this value within the normal band and therefore Green.

Choice B: Plausible because for the same reason above except approaching alarm limit.

Choice C: Correct Answer

Choice D: Plausible because a wrong assumption by the candidate beyond the stem of the question. All of the inputs to SPDS are operable.

SRO Only Basis: N/A

Notes

PRIMARY CONTAINMENT CONTROL

PCCP-1

ENTRY CONDITIONS:

* SUPPRESSION POOL TEMP ABOVE 95°F <u>OR</u> ABOVE 105°F WHEN DUE TO TESTING
* DRYWELL AVERAGE AIR TEMP ABOVE 150°F
* DRYWELL PRESS ABOVE 1.7 PSIG
* SUPPRESSION POOL WATER LEVEL ABOVE - 27 INCHES (- 2 FEET & 3 INCHES)
* SUPPRESSION POOL WATER LEVEL BELOW - 31 INCHES (- 2 FEET & 7 INCHES)
* PRIMARY CTMT H2 CONCENTRATION ABOVE 1.5%

PCCP-2

15. Color Coding

The SPDS displays utilize several colors which indicate condition or status.

The following CRT colors have been selected for use on the displays.

1) **White** - used for drawings, some box outlines, numbers and titles.

2) **Green** - Safe condition (within limits). Green is also used to indicate closed valves and/or piping systems.

3) **Yellow** - Caution. The parameter or condition is out of the normal operating band but has not yet reached an alarm condition.

4) **Magenta** - Bad data/not measured indicated parameter is magenta.

5) **Cyan** - Data not validated. This color indicates that the parameter has not been validated. If there is only one output signal for a parameter or if the on-scale signals are not consistent it will appear as a solid cyan block containing white test.

6) **Red** - Alarm Condition - When a parameter reaches the alarm limit the display changes to red. Red also indicates an open valve position and/or piping system.

7) **Blue** - First five keys on the SOFT KEY menu bar matches the first five function keys on the keyboard. This makes the associated keys easier to locate.

8) **Gold** - Last five keys on the SOFT KEY menu bar matches the five function keys on the keyboard.

APPENDIX C
SPDS Interpretation of Data

Colors

Colors indicate the status of a system. The colors and their meanings are as follows:

COLOR	STATUS	COMMENTS
Red	Alarm	1. An unsafe state is being measured. A red digital display indicates an unsafe high or low condition. 2. Valve is open.
Yellow	Caution	A limit that is near to an alarm condition is being recorded.
Green	Safe	1. Measurements indicate point(s) are within the normal range. 2. Valve is closed.
Magenta	Bad data	Data received from point(s) is being sampled or is invalid. Any output having a magenta color should be rejected.
White	Not measured	For asterisks, white indicates that the data is static. Also used for informational text. For example, a pipe will be colored white to allow the user to be quickly oriented with the screen information. The white pipe, however, is not a measured point.
Cyan	Not validated	Several points that monitor a single plant condition are not in agreement. The data should be rejected.

Colors indicate the current status of the system. Thus, if an alarm condition occurs and then returns to normal, the alarm will pass from red to green regardless of operator intervention in the GDP system.

Symbols

A cyan (blue-green) pattern behind a given displayed value indicates that the value is not validated.

Asterisks in a field indicate that the data coming in is not measured or is bad. The asterisks are magenta.

Bad Data Indications

In addition to the bad data indications listed in COLORS and SYMBOLS, the following variations also indicate bad data:

A. Magenta border around a white box

B. Value displayed in magenta. (See also COLORS)

C. White or Magenta "*". (See also SYMBOLS)

D. White or Magenta value of 1E+25. (See also COLORS)

122. **SUPP POOL WTR LVL [Plant Status Matrix]**

Event Status	Display Message	Color Code	Condition
Inactive/ Safe	(FEET AND INCHES)	Green	1. -2' 3½" (-27.5") > SP water level > -2' 6½" (-30.5")
Caution	(FEET AND INCHES)	Yellow	1. -2' 3" (-27") > level ≥ -2' 3½" (-27.5") - or - 2. -2' 6½" (-30.5") ≥ level > -2' 7" (-31")
Alarm	(FEET AND INCHES)	Red	1. -2' 3" (-27") ≤ level - or - 2. ≤ -2' 7" (-31")

123. **SUPPRESSION POOL TEMPERATURES [241]**

The values in the graphic are driven by the temperature validation parameters shown on displays 755 and 760.

The azimuth location of each SRV tailpipe, HPCI, and RCIC discharge into the suppression pool are shown. The display also shows the temperature at seven locations in the pool.

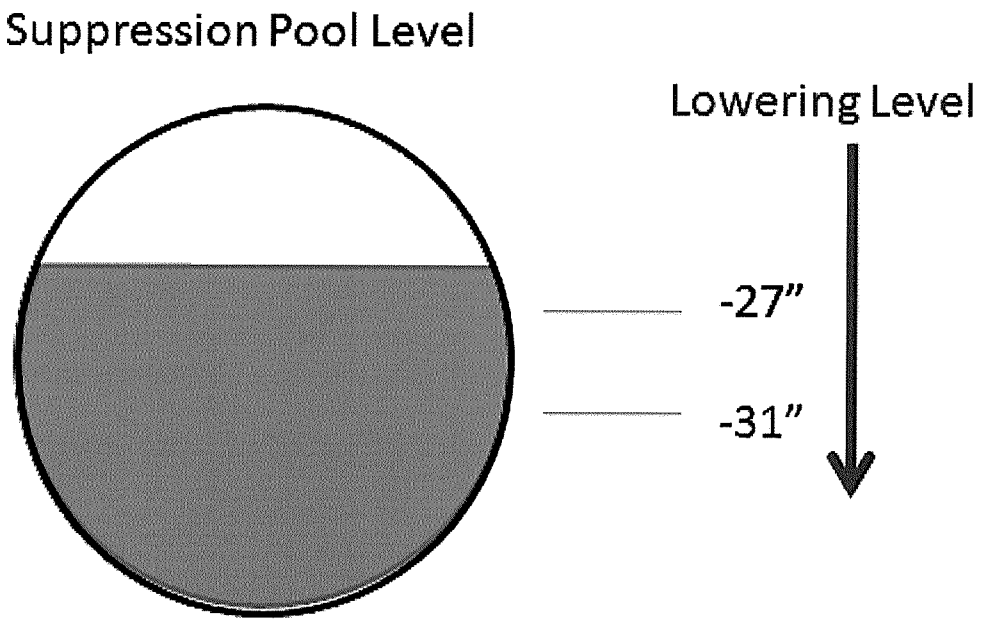

Categories

K/A:	295030 K2.09	Tier / Group:	T1G1
RO Rating:	2.5	SRO Rating:	2.8
LP Obj:	CLS-LP-060*002	Source:	NEW
Cog Level:	LOW	Category 8:	Y

56. A Design Basis LOCA has occurred on Unit One with CS Loop B as the only available RPV injection source.

Which one of the following correctly completes the statement below?

Maintaining reactor water level above -57.5 inches with a minimum Core Spray injection flow of __(1)__ gpm provides assurance that __(2)__ exists.

A. (1) 4700
   (2) adequate core cooling

B. (1) 4700
   (2) minimum steam cooling water level

C✓ (1) 5000
   (2) adequate core cooling

D. (1) 5000
   (2) minimum steam cooling water level

Feedback

K/A: 295031 K3.03
Knowledge of the reasons for the following responses as they apply to REACTOR LOW WATER LEVEL :
Spray cooling
(CFR: 41.5 / 45.6)

RO/SRO Rating: 4.1/4.4

Objective: CLS-LP-300-B*008
Define all EOP terms per the EOP definitions list in EOP-01-UG.

Reference:
EOP-01-UG

Cog Level: Low

Explanation: The reason is adequate core cooling
Adequate core cooling exists per EOP-UG if RPV level is at the jet pump suction with Core Spray injecting at @ 5000 gpm. Jet pump suction elevation is @ -59", specified in RVCP as -57.5 for instrument readability.

Distractor Analysis:
Choice A: Plausible because 4700gpm was the old flow requirement prior to EC#63657 and ACC is correct.

Choice B: Plausible because 4700gpm was the old flow requirement prior to EC#63657 and MSCWL (LL4) is -30 inches (depressurized) and would not be applicable under these accident conditions.

Choice C: Correct Answer

Choice D: Plausible because 5000 gpm is correct and MSCWL (LL4) is -30 inches (depressurized) and would not be applicable under these accident conditions.

SRO Only Basis: N/A

Notes

Definitions

ADEQUATE CORE COOLING

Heat removal from the reactor sufficient to prevent rupturing the fuel clad.

Four viable mechanisms of adequate core cooling exist within the EOPs:

- Core submergence
- Steam cooling with injection of makeup water to the reactor
- Steam cooling without injection of makeup water to the reactor
- Reactor water level at jet pump suction with at least one core spray pump injecting into the reactor vessel at 5000 gpm.

AFTER

Following in time or place

ANTICIPATED TRANSIENT WITHOUT SCRAM

The reactor is not shutdown following a scram.

ALTERNATE INJECTION SUBSYSTEMS

Systems which may be used to inject water to the reactor when the injection systems cannot supply sufficient injection water to the vessel. They are as follows:

- Service Water
- Fire Protection System
- Demineralized water via ECCS Keepfill System
- SLC System (boron solution or demineralized water)
- Heater Drains System
- RCIC (local manual operation)
- Emergency Diesel Makeup Pump

FIGURE 17
Unit 1 Reactor Water Level at TAF

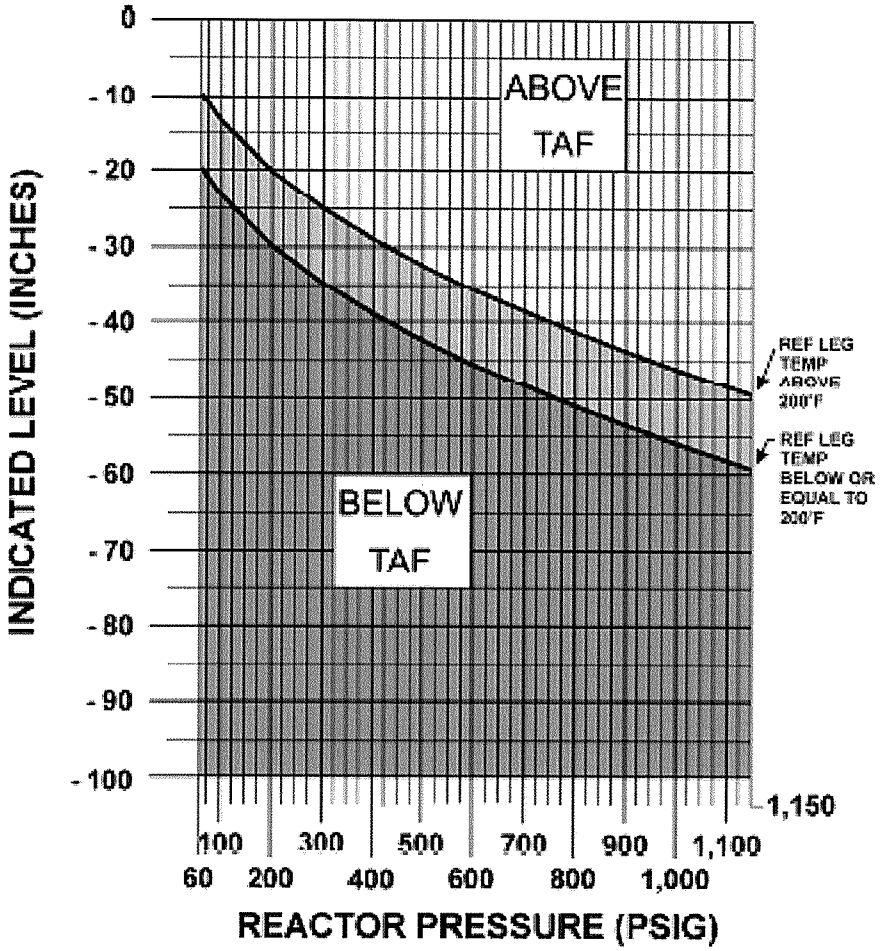

WHEN REACTOR PRESSURE IS LESS THAN
60 PSIG, USE INDICATED LEVEL.
TAF IS -7.5 INCHES.

FIGURE 18
Unit 1 Reactor Water Level at LL-4
(Minimum Steam Cooling Level)

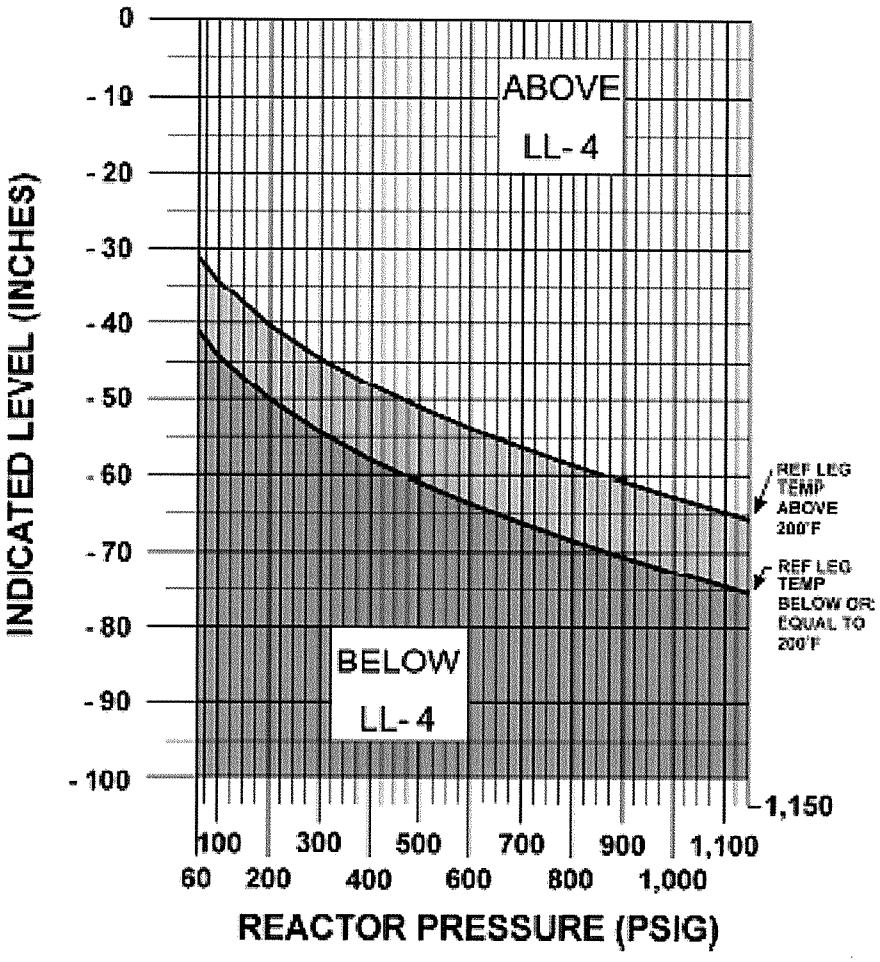

WHEN REACTOR PRESSURE IS LESS THAN
60 PSIG, USE INDICATED LEVEL.
LL-4 IS -30.0 INCHES.

FIGURE 19
Unit 1 Reactor Water Level at LL-5
(Minimum Zero Injection Level)

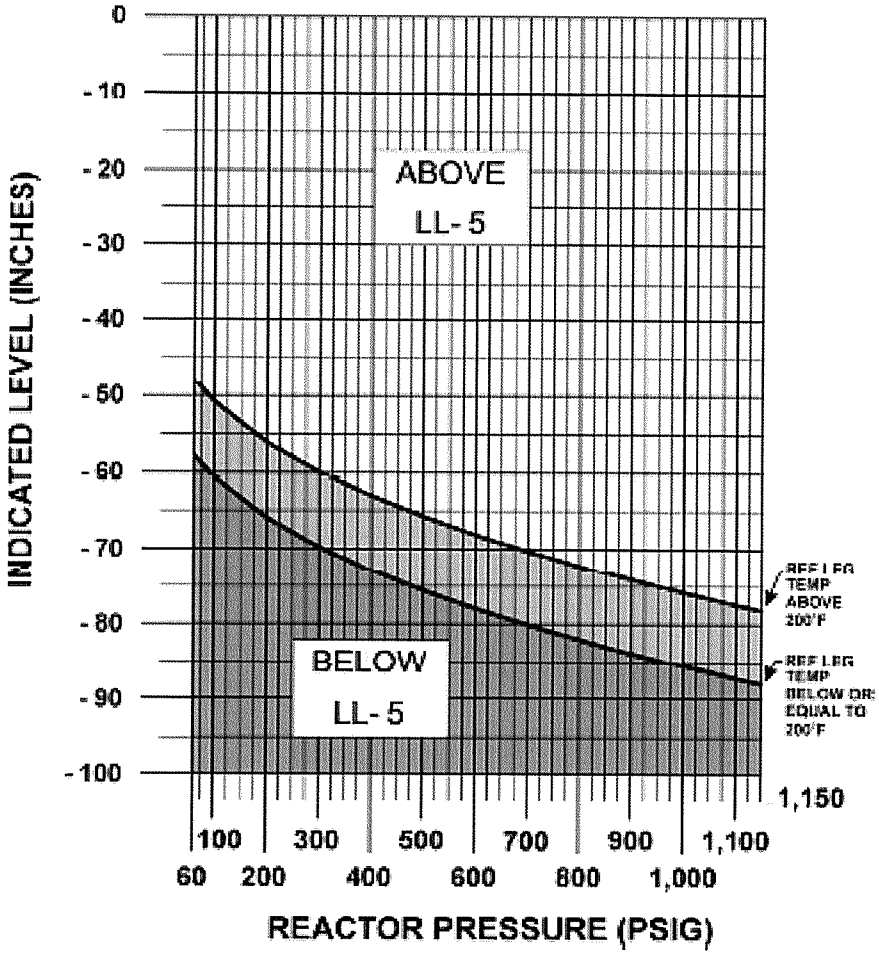

WHEN REACTOR PRESSURE IS LESS THAN
60 PSIG, USE INDICATED LEVEL.
LL-5 IS -47.5 INCHES.

C1-5 If reactor vessel water level can be restored and maintained above:

- LL-4 (Minimum steam Cooling Reactor Water Level) or
- -57.5 inches (elevation of the jet pumps suction) with at least one Core Spray pump injecting into the reactor vessel at greater than or equal to 5000 gpm,

establish primary containment cooling requirements to maintain NPSH for the ECCS pumps reducing LPCI injection flow before suppression pool temperature reaches 150°F.

C1-6 If reactor vessel water level cannot be restored and maintained above -57.5 inches (elevation of the jet pumps suction) with at least one Core Spray pump injecting into the reactor vessel at greater than or equal to 5000 gpm, or it has been determined that flooding of primary containment is required for long term core cooling,

PRIMARY CONTAINMENT FLOODING IS REQUIRED; enter the Reactor Vessel and Primary Containment Flooding Severe Accident Guideline.

CONTINGENCY #1 ALTERNATE LEVEL CONTROL SECTION

EPG None
PSTG C1-6

1.0 DEVIATIONS

This step provides guidance for transferring to primary containment flooding from the emergency operating procedures. The transfer is based upon not being able to maintain the long term core cooling defined by the UFSAR. If reactor vessel water level cannot be maintained above the suction of the jet pumps, or if injection from core spray cannot be maintained above 5000 gpm, then there is not adequate assurance of long term core cooling. The basis for the long term core cooling is that the core has been reflooded to the elevation of the jet pump suction and that the core spray injection is providing cooling to the upper portion of the core to maintain temperature low. If neither of these conditions are met, then additional actions are required to maintain or restore cooling to the core.

2.0 DIFFERENCES

None

Categories

K/A:	295031 K3.03	Tier / Group:	T1G1
RO Rating:	4.1	SRO Rating:	4.4
LP Obj:	CLS-LP-300-B*008	Source:	NEW
Cog Level:	LOW	Category 8:	Y

57. During accident conditions on Unit Two SCCP directed restarting Reactor Building HVAC IAW SEP-04, Reactor Building HVAC Restart Procedure.

Shortly following restart of the ventilation system the RO observes the following:

RX BLDG VENT TEMP HIGH	in Alarm
Rx Bldg Vent Exhaust Rad Monitor A indication	2.0 mR/hr
Rx Bldg Vent Exhaust Rad Monitor B indication	3.5 mR/hr

Based on the current conditions which one of the following actions is(are) required?

A. Continue to operate Reactor Building HVAC because SEP-04 bypassed all the isolation logic.

B. Continue to operate Reactor Building HVAC because the Rad Monitor readings are no longer reliable.

C. Isolate Reactor Building HVAC and ensure SBGT is running because SEP-04 bypassed ALL the isolation logic.

D✓ Isolate Reactor Building HVAC and ensure SBGT is running because the Rad Monitor readings are no longer reliable.

Feedback

K/A: 295032 K2.02
Knowledge of the interrelations between HIGH SECONDARY CONTAINMENT AREA TEMPERATURE and the following:
Secondary containment ventilation
(CFR: 41.7 / 45.8)

RO/SRO Rating: 3.6/3.7

Objective: CLS-LP-300-M(K)*011
11. Given plant conditions involving Reactor Building HVAC system isolation and the Secondary Containment Control Procedure, determine if the Reactor Building HVAC system should be restarted.
11. Given plant conditions and 0EOP-01-SEP-04, determine the required operator actions if a high Reactor Building Vent radiation or Reactor Building Vent high temperature annunciator activates when restarting Reactor Building HVAC.

Reference:
0EOP-01-SEP-04, Revision 12, Page 4, Section 2.9

Cog Level: High

Explanation:
Rx Building Vent Temp Hi alarm indicates temperature in the exhaust duct ≥135°F deg. This exceeds the EQ of the Exh rad monitors. SEP-04 defeats RPV Low level, Hi DW pressure, and Main Stack rad Hi. Rx Bldg Vent Rad Hi-Hi and Vent Temp Hi remain active and should have isolated RBHVAC and started both SBGT trains. SEP-04 also provides verification of these actions should either condition occur.

Distractor Analysis:
Choice A: Plausible because SCCP provided guidance to "restart" RB HVAC which can be interpreted to mean under any conditions. Not ALL isolation logic is bypassed.

Choice B: Plausible because SCCP provided guidance to "restart" RB HVAC which can be interpreted to mean under any conditions. Rad monitor readings not being reliable is correct.

Choice C: Plausible because isolating RB HVAC is correct, but not ALL isolation logic is bypassed.

Choice D: Correct Answer

SRO Only Basis: N/A

Notes

Another input to isolation logic for the Reactor Building are the two temperature switches located in the exhaust plenum. Should plenum air temperature rise above 135°F Reactor Building HVAC will be isolated and SBGT will start. Also, Annunciator UA-3 6-2, RX BLDG VENT TEMP HI will alarm. These temperature switches are also powered from the same source as the radiation modules as they are incorporated in series into the logic scheme with the radiation monitoring.

2.12 RB Ventilation Cooling

Unit 1 (Figures 10, 11, 12)

The Unit 1 Reactor Building Ventilation Cooling System is a closed loop that circulates chilled water from two chillers and two pumps through a heat exchanger and two sets of cooling coils. The system is used to cool the Unit 1 Reactor Building, Radwaste Building, and the Unit 1 or Unit 2 Drywell Ventilation Systems. The chillers [1-VA-1A(1B)-CHU-RB] and pumps [1-VA-1A(1B)-CHU-RB-PMP] are located on the Unit 1 Reactor Building RHR Heat Exchanger Room roof. The Drywell Ventilation Heat Exchanger (1-VA-DW-HTX) is located on the Radwaste Building loading dock. The Reactor Building cooling coils (1-VA-CLR-5095) are located in the Unit 1 Reactor Building Air Intake Plenum. The Radwaste Building cooling coils [1-VA-1A(1B)(1C)(1D)-CHU-COIL] are located in the Radwaste Building Air Intake Plenum.

Isolation/manual control valves control the flow of chilled water from the Unit 1 Reactor Building Ventilation Cooling System to the Reactor Building, Radwaste Building, and Drywell Heat Exchanger.

Unit 1 RB Ventilation Cooling System 300 ton (1-VA-1B-CHU-RB) is a Carrier Model 30XA325 air cooled liquid chiller designed to produce 300 tons of effective cooling capability. It is designed for operating with environmentally safe R-134a refrigerant.

Other features include the following:

- an automatic start circuit for the chill water pump upon starting of the new chiller;
- Interlock with the 2D RBCCW pump to provide shutdown of the pump on loss of the new chiller
- An interposing relay in the 2D RBCCW remote starter panel to alleviate low voltage at the pump contactors caused by the long control loop.

Flexible connections are installed in each of the chilled water supply and return piping connections to the chiller evaporator. The flex connections will prevent the possibility of vibration from the piping damaging the chiller evaporator.

REACTOR BUILDING HVAC RESTART

1.0 ENTRY CONDITIONS

- As directed by Secondary Containment Control Procedure, EOP-03-SCCP

  OR

- As directed by Containment and Radioactivity Release Control, SAMG-02

2.0 OPERATOR ACTIONS

NOTE:	Manpower:	1 Control Operator 1 Auxiliary Operator 1 Independent Verifier
	Special equipment:	2 jumpers (10 and 11)

CO: 2.1. **IF** the reactor building ventilation radiation monitors have been off scale high as indicated on *D12-RR-R605* **OR** the reactor building exhaust temperature has exceeded 135°F (UA-03, 6-2), **THEN EXIT** this procedure. ☐

CAUTION

Installation of the following jumpers will also inhibit the automatic start of SBGT on reactor low water level and on high drywell pressure.

2.2 **INSTALL** the following jumpers to bypass the reactor low water level and drywell high pressure interlocks:

CO: - Jumper 10 in Panel XU-27, Terminal Board E, from the right side of Terminal 28 to the right side of Terminal 30 ☐

CO: - Jumper 11 in Panel XU-28, Terminal Board E, from the right side of Terminal 28 to the right side of Terminal 30 ☐

2.0 OPERATOR ACTIONS

2.7 **OPEN** the following valves:

CO: - *RB VENT INBD ISOL VALVES, EXHAUST C-BFIV-RB, SUPPLY A-BFIV-RB* ☐

CO: - *RB VENT OTBD ISOL VALVES, EXHAUST D-BFIV-RB, SUPPLY B-BFIV-RB* ☐

NOTE:	In order to start a reactor building supply or exhaust fan, the control switch should be held in *START* until the discharge damper is full open.

CO: 2.8 **START** as many reactor building exhaust and supply fans as possible to provide maximum ventilation (OP-37.1). ☐

2.9 **IF** *PROCESS RX BLDG VENT RAD HI-HI* annunciator (UA-03 3-5) (alarm setpoint at 4 mR/hr) **OR** *RX BLDG VENT TEMP HIGH* annunciator (UA-03 6-2) (alarm setpoint at 135°F) is received, **THEN**:

CO: a. **ENSURE** reactor building exhaust and supply fans are off. ☐

b. **ENSURE** the following valves are closed:

CO: - *RB VENT INBD ISOL VALVES, EXHAUST C-BFIV-RB, SUPPLY A-BFIV-RB* ☐

CO: - *RB VENT OTBD ISOL VALVES, EXHAUST D-BFIV-RB, SUPPLY B-BFIV-RB* ☐

CO: c. **ENSURE** the SBGT System has initiated (OP-10). ☐

RX BLDG VENT TEMP HIGH

AUTO ACTIONS

1. Reactor Building ventilation system trips and isolates.
2. Standby gas treatment trains start.
3. If open, the inboard and outboard primary containment purge and vent valves close.
4. PASS sample valves to torus close.

CAUSE

1. High temperature in the Reactor Building exhaust plenum, 135°F.
2. Circuit malfunction.

OBSERVATIONS

1. Reactor Building air temperature monitor indicates greater than 135°F on Panel XU-3.
2. RX BLDG ISOLATED (2APP-UA-05 6-10) alarm.

ACTIONS

1. Verify auto actions.
2. If entry conditions are met, enter 0EOP-03-SCCP, Secondary Containment Control.
3. If entry conditions are met, enter 0EOP-04-RRCP, Radiological Release Control.
4. Refer to 0AOP-05.0, Radioactive Spills, High Radiation, and Airborne Activity.
5. If a circuit malfunction is suspected, ensure that a DLE is submitted.

DEVICE/SETPOINTS

Rad Monitor D12-TS-N010A/B 135°F

POSSIBLE PLANT EFFECTS

Possible release to environs in excess of ODCM limits.

REFERENCES

1. LL-9353-30
2. LL-93053-32
3. 0AOP-05.0, Radioactive Spills, High Radiation and Airborne Activity
4. 0EOP-03-SCCP, Secondary Containment Control Procedure
5. 0EOP-04-RRCP, Radiological Release Control Procedure
6. ODCM 7.3.7
7. APP UA-05 6-10, Rx Bldg Isolated

Categories

K/A:	295032 K2.02	Tier / Group:	T1G2
RO Rating:	3.6	SRO Rating:	3.7
LP Obj:	CLS-LP-300-K*011	Source:	NEW
Cog Level:	HIGH	Category 8:	Y

58. Following a Reactor Scram on Unit Two due to a loss of Off-site power (LOOP) the following plant conditions exist:

AREA RAD RX BLDG HIGH	In alarm
SOUTH RHR RM FLOOD LEVEL HI	In alarm
SOUTH CS RM FLOOD LEVEL HI	In alarm
Reactor Building 20' Rad Level	Approaching Max Norm Operating Rad
Reactor Building 20' Temperature	Approaching Max Norm Operating Temp

Based on the conditions above which one of the following identifies the operator action required IAW SCCP?

A. Open seven ADS valves.

B. Reset RPS IAW LEP-02.

C. Rapidly depressurize the RPV to the main condenser.

D. Isolate the RWCU system prior to reaching Max Safe Operating Temp.

Feedback

K/A: 295033 A1.05
Ability to operate and/or monitor the following as they apply to HIGH SECONDARY CONTAINMENT AREA RADIATION LEVELS :
Affected systems so as to isolate damaged portions
(CFR: 41.7 / 45.6)

RO/SRO Rating: 3.9/4.0

Objective: CLS-LP-300-M*08a
8. Given plant conditions and the Secondary Containment Control Procedure, determine if any of the following are required:
   a. Manual reactor scram
   b. Consider Anticipation of Emergency Depressurization
   c. Emergency Depressurization

Reference:
RSP, SCCP, 0OI-37.9

Cog Level: High

Explanation:This meets the KA due to having to reset RPS to isolate the affected system (SDV leaking) thereby closing the scram valves which are the source of the leak causing the high rad levels in the reactor building.

Reactor Scram due to LOOP providing indications of SDV rupture.
The Maximum Normal Operating Values are the highest radiation levels expected to occur during normal plant operating conditions with all directly associated support and control systems functioning properly.
The Maximum Safe Operating Values are the radiation levels above which personnel access necessary for the safe shutdown of the plant will be precluded. These radiation levels are utilized in establishing the conditions under which reactor depressurization is required. Separate radiation levels are provided for each Secondary Containment area.
Flood level Hi is MNOWL entry condition to SCCP. LOOP automatically provides Groups 1,2,3,6,8, & 10 isolations. No RWCU (Grp 3) isolation failure provided in stem. Based upon flood level status, along with rising 20' temperature and radiation leads to SDV rupture.
2 areas above MNOWL with primary system discharge requires Reactor Scram, cooldown <100 deg/hr, and consideration for anticipation of ED. No areas have reached Max Safe Operating Values, Emergency Depressurization is not required.
RPS can be reset and SCCP directs isolating the primary system discharge, main condenser not available due to LOOP

Distractor Analysis:
Choice A: Plausible because due to areas above MSOWL with a primary system leak requires ED.

Choice B: Correct Answer

Choice C: Plausible because primary system leaking to secondary containment with conditions degrading would lead RO to consider anticipating ED, however with a LOOP, the main condenser is unavailable and therefore not allowed.

Choice D: Plausible because due to the location of the leak could be from the RWCU system, however incorrect to assume failure of Group 3 isolation from LOOP. Current conditions, normal cooldown to reduce the leak rate is appropriate, however the main condenser is not available and therefore not allowed.

SRO Only Basis: N/A

Notes

TABLE 3

AREA RADIATION LIMITS

PLANT AREA	PLANT LOCATION DESCRIPTION	ARM CHANNEL	MAX NORM OPERATING VALUE (mR/HR)	MAX SAFE OPERATING VALUE (mR/HR)
N CORE SPRAY	N CORE SPRAY ROOM	15	200	* 7000
S CORE SPRAY	S CORE SPRAY ROOM	16	200	* 7000
N RHR	N RHR ROOM	17	200	* 7000
S RHR	S RHR ROOM	18	200	* 3000
HPCI	HPCI ROOM	N/A	N/A	* 3000
RX BLDG 20FT ELEV	N ACROSS FROM TIP ROOM	19	80	* 2000
	DRYWELL ENTRANCE	20		
	DECON ROOM	22		
	RAILROAD DOORS	23		
RX BLDG 50FT ELEV	SAMPLE STATION	24	80	* 2000
	RX BLDG AIR LOCK	25		
RX BLDG 117 FT ELEV	N OF FUEL STORAGE POOL	27	80	* 7000
	BETWEEN RX & FUEL POOL	28	1000	7000
	CASK WASH AREA	29	90	* 7000
RX BLDG 80 FT ELEV	SPENT FUEL COOLING SYSTEM	30	90	* 3000

* CONTACT E&RC TO DETERMINE IF MAX SAFE OPERATING VALUE IS EXCEEDED

TABLE 1

AREA TEMPERATURE LIMITS

PLANT AREA	PLANT LOCATION DESCRIPTION	MAX NORM OPERATING VALUE (°F) (NOTE 1)	MAX SAFE OPERATING VALUE (°F)	AUTO GROUP ISOL
N CORE SPRAY	N CORE SPRAY ROOM	120	175	N/A
S CORE SPRAY	S CORE SPRAY ROOM	120	175	N/A
RWCU	RWCU PUMP ROOM A	140	225	3
	RWCU PUMP ROOM B			
	RWCU HX ROOM			
N RHR	N RHR EQUIP ROOM	175	295	N/A
S RHR	S RHR EQUIP ROOM	175	295	N/A
	RCIC EQUIP ROOM	165	295	5
HPCI	HPCI EQUIP ROOM	165	165	4
STEAM TUNNEL	RCIC STM TUNNEL	190	295	5
	HPCI STM TUNNEL	190	295	4
20 FT	20 FT NORTH	140	200	N/A
	20 FT SOUTH			
50 FT	50 FT NW	140	200	N/A
	50 FT SE			
REACTOR BLDG	MULTIPLE AREAS ANNUNCIATOR A-02 5-7	ALARM SETPOINT	N/A	3, 4, AND/OR 5
REACTOR BLDG	MSIV PIT ANNUNCIATOR A-06 6-7	ALARM SETPOINT	N/A	1

NOTE 1: MAX NORM OPERATING VALUE IS THE ANNUNCIATOR/GROUP ISOLATION SETPOINT WHERE APPLICABLE

TABLE 4

AREA WATER LEVEL LIMITS

PLANT AREA	MAX NORM OPERATING VALUE (NOTE 1) (INCHES)	MAX SAFE OPERATING VALUE (NOTE 2) (INCHES)
N CORE SPRAY	6	12
S CORE SPRAY	6	12
N RHR	6	12
S RHR	6	12
HPCI	6	12

NOTE 1: RM FLOOD LEVEL HI ANNUNCIATOR INDICATES 6 INCHES WATER LEVEL
NOTE 2: RM FLOOD LEVEL HI- HI ANNUNCIATOR INDICATES 12 INCHES WATER LEVEL

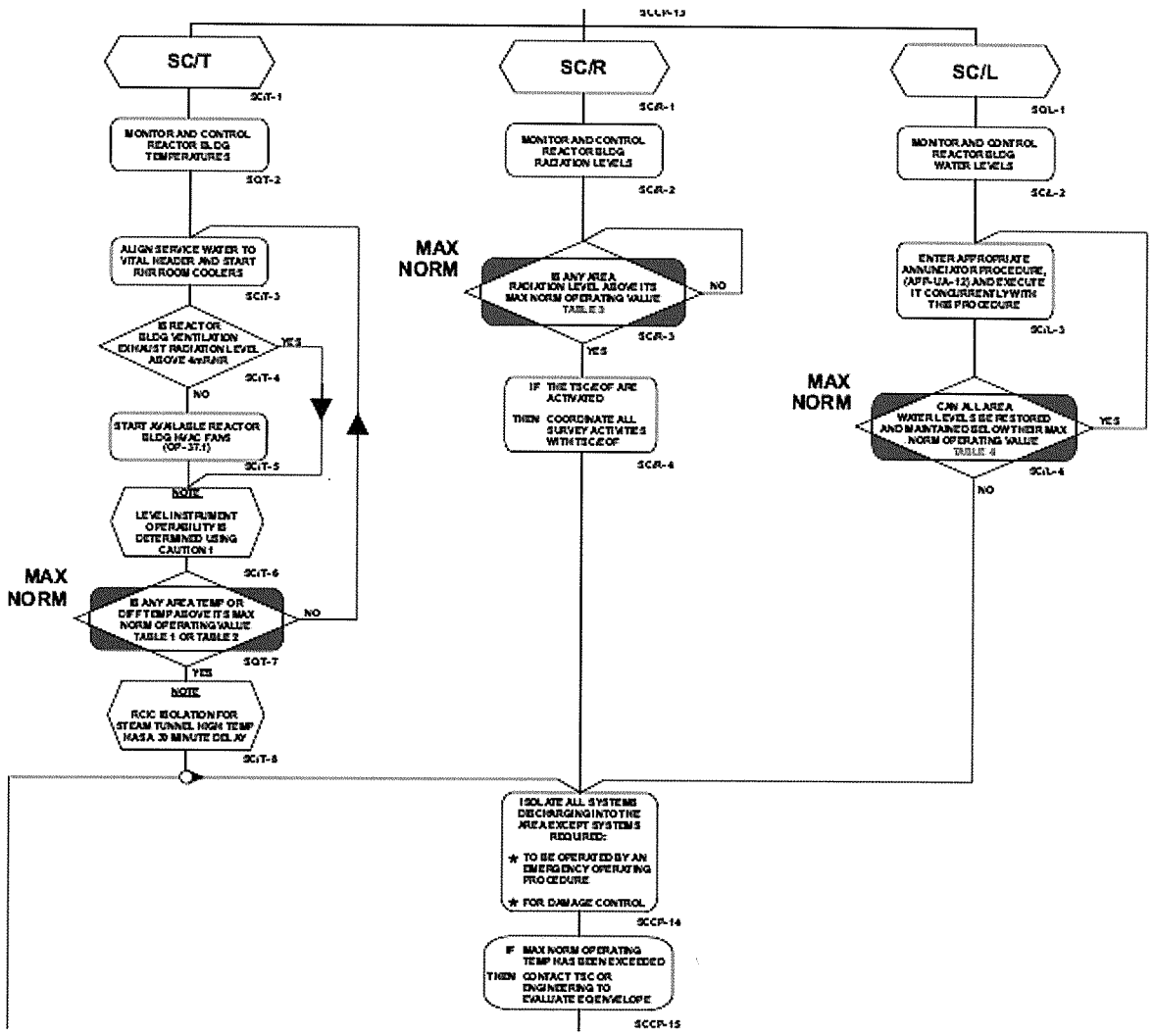
SCCP-13
SC/T
SC/T-1
MONITOR AND CONTROL REACTOR BLDG TEMPERATURES
SCT-2
ALIGN SERVICE WATER TO VITAL HEADER AND START RHR ROOM COOLERS
SC/T-3
IS REACTOR BLDG VENTILATION EXHAUST RADIATION LEVEL ABOVE 4mR/HR
YES
SC/T-4
NO
START AVAILABLE REACTOR BLDG HVAC FANS (OP-37.1)
SC/T-5
NOTE
LEVEL INSTRUMENT OPERABILITY IS DETERMINED USING CAUTION 1
SC/T-6
MAX NORM
IS ANY AREA TEMP OR DIFF TEMP ABOVE IT'S MAX NORM OPERATING VALUE TABLE 1 OR TABLE 2
NO
SCT-7
YES
NOTE
RCIC ISOLATION FOR STEAM TUNNEL HIGH TEMP HAS A 30 MINUTE DELAY
SC/T-8
SC/R
SC/R-1
MONITOR AND CONTROL REACTOR BLDG RADIATION LEVELS
SC/R-2
MAX NORM
IS ANY AREA RADIATION LEVEL ABOVE ITS MAX NORM OPERATING VALUE TABLE 3
NO
SC/R-3
YES
IF THE TSC/EOF ARE ACTIVATED
THEN COORDINATE ALL SURVEY ACTIVITIES WITH TSC/EOF
SC/R-4
SC/L
SC/L-1
MONITOR AND CONTROL REACTOR BLDG WATER LEVELS
SC/L-2
ENTER APPROPRIATE ANNUNCIATOR PROCEDURE, (APP-UA-12) AND EXECUTE IT CONCURRENTLY WITH THIS PROCEDURE
SC/L-3
MAX NORM
CAN ALL AREA WATER LEVELS BE RESTORED AND MAINTAINED BELOW THEIR MAX NORM OPERATING VALUE TABLE 4
YES
SC/L-4
NO
ISOLATE ALL SYSTEMS DISCHARGING INTO THE AREA EXCEPT SYSTEMS REQUIRED:
★ TO BE OPERATED BY AN EMERGENCY OPERATING PROCEDURE
★ FOR DAMAGE CONTROL
SCCP-14
IF MAX NORM OPERATING TEMP HAS BEEN EXCEEDED
THEN CONTACT TSC OR ENGINEERING TO EVALUATE EQ ENVELOPE
SCCP-15

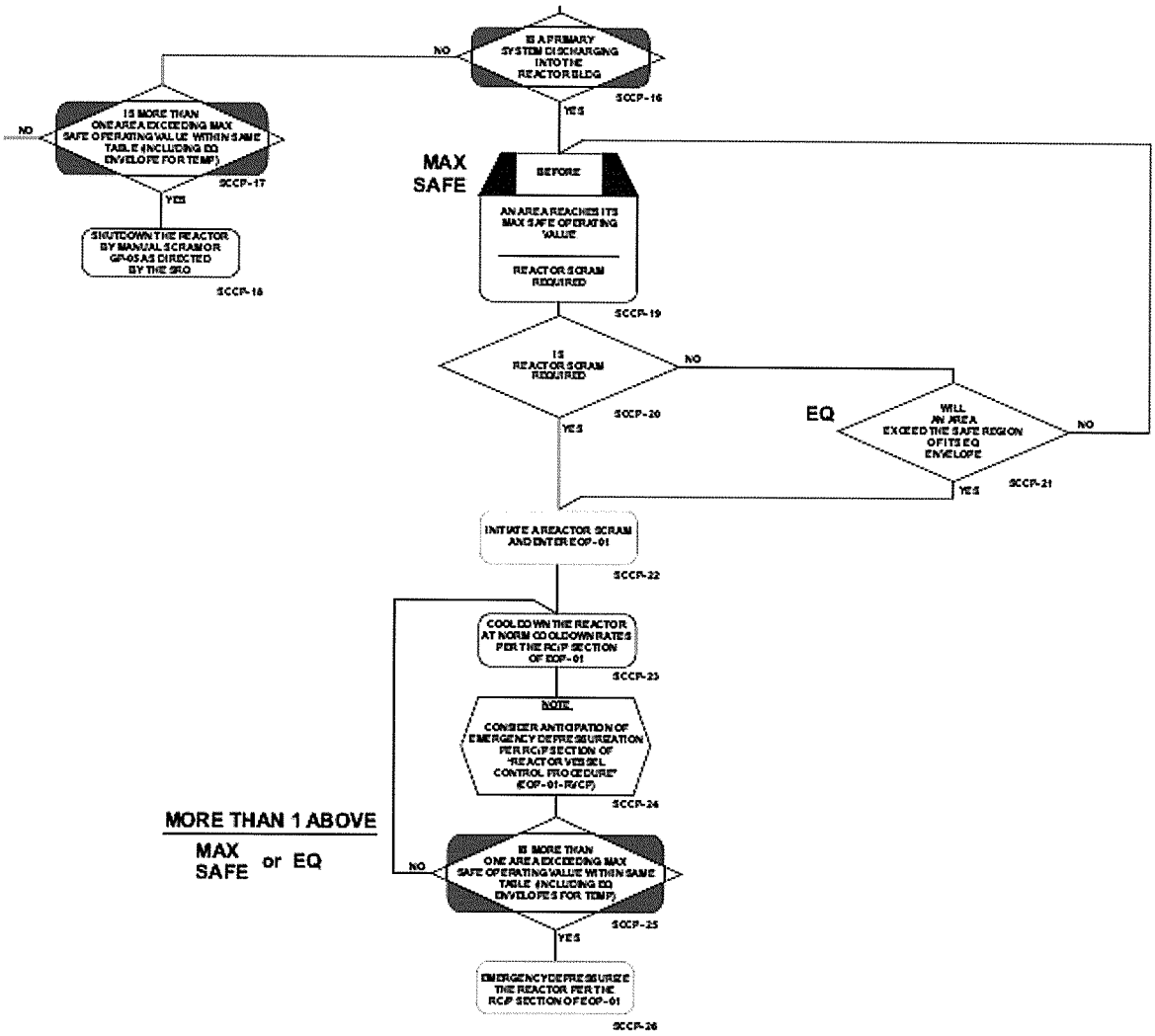

BNP VOL- VI 0EOP- 03- SCCP
REVISION NO: 7

RC/P Monitor and control reactor vessel pressure

If while executing the following steps:

- A high drywell pressure ECCS initiation signal (1.7 psig [drywell pressure which initiates ECCS]) exists, prevent injection from those Core Spray and RHR pumps not required to assure adequate core cooling prior to depressurizing below their maximum injection pressures.
- Emergency Depressurization is anticipated and either all control rods are inserted to or beyond position 00 (Maximum Subcritical Banked Withdrawal Position) or it has been determined that the reactor will remain shutdown under all conditions without boron, rapidly depressurize the reactor vessel with the main turbine bypass valves, irrespective of the resulting cooldown rate.
- Emergency Depressurization is or has been required, enter Emergency Procedure Guideline Contingency #2.
- Reactor vessel water level cannot be determined, enter Emergency Procedure Guideline Contingency #4.

RC/P-1 If any SRV is cycling, manually open SRVs until reactor vessel pressure drops to 950 psig (reactor vessel pressure at which all turbine bypass valves are fully open).

STEP SCCP-16

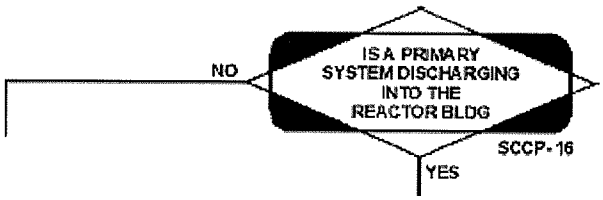

STEP BASES:

Primary systems comprise the pipes, valves, and other equipment which connect directly to the reactor such that a reduction in reactor pressure will effect a decrease in the flow of steam or water being discharged through an unisolated break in the system.

If a primary system is discharging into the Reactor Building when this step of the procedure is reached, one of three conditions must exist:

- A primary system break cannot be isolated because system operation is required to assure adequate core cooling or shutdown the reactor.
- No isolation valves exist upstream of a primary system break, or if isolation valves do exist, they cannot be closed because of some mechanical/electrical/pneumatic failure.
- The source of the discharge cannot be determined.

Another criteria which may be used in the case of unknown sources, "Is the leaking water reactor coolant?" If not, then no primary system is discharging. Specifically, SRVs being open with a rupture of the suppression pool is not a primary system leaking to secondary containment. Suppression pool water does not fit the description of having come from a primary system as a reduction in reactor pressure does not result in a reduction in the suppression pool water leak rate.

The subsequent steps provide instructions to shutdown, scram, or rapidly depressurize the reactor based upon the source of heat addition to the Reactor Building. Discharge of steam or water from a primary system requires that the operator take actions in accordance with subsequent steps. If the heat addition to secondary containment is from a source other than a primary system discharging into an area, appropriate operator actions are directed.

STEPS RC/P-05 through RC/P-11

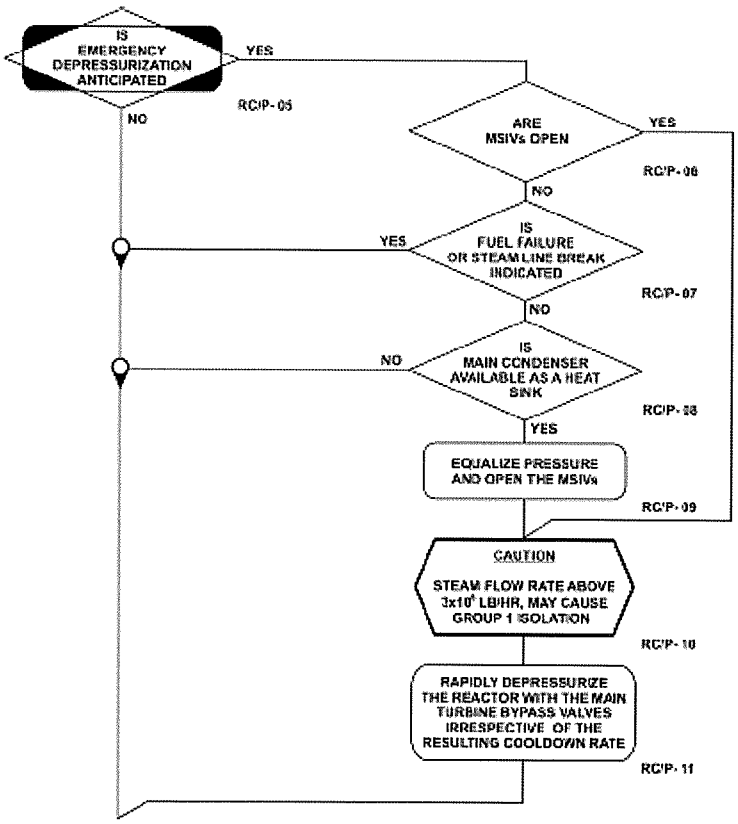

STEP BASES:

As conditions which will require Emergency Depressurization are approached, it is appropriate to rapidly reject as much heat energy as possible from the reactor vessel to a heat sink other than the Suppression Pool. Such action preserves the heat capacity of the Suppression Pool for as long as possible, until a requirement for Emergency Depressurization actually exists.

STEPS RC/P-05 through RC/P-11 (continued)

The term "Anticipated" implies an expectation, based on an evaluation of plant conditions and extrapolation of parameter trends, that an Emergency Depressurization requirement will soon be reached and cannot be averted by actions prescribed in the EOPs. Before this conclusion can be drawn, however, the effectiveness of the steps preceding the depressurization requirement must be evaluated.

The appropriate EOPs contain notes stating to "*Consider Anticipation of Emergency Depressurization ...*".

If there has not been fuel failure indicated by an Abnormal Core Conditions and Core Damage Unusual Event EAL classification or a steam line break, and the main condenser is available as a heat sink, discharging reactor steam to the main condenser through the main turbine bypass valves is the most viable method of rapidly reducing reactor pressure without adding heat to the Suppression Pool. Other mechanisms have less heat removal capacity, take longer to establish the appropriate valve lineup, etc.

The anticipatory depressurization prescribed by this critical step is permitted only if the reactor will remain shutdown under all possible conditions of coolant temperature and boron concentration. Bypassing or defeating isolation interlocks is not authorized in these steps.

The depressurization is performed "irrespective of the resulting cooldown rate" since the need for rapid depressurization takes precedence over normal cooldown rate limits. If the rapid depressurization is not performed, emergency depressurization would soon be required.

The caution detailing the restrictions on steam flow for Unit 2 which may cause a PCIS Group 1 isolation is added because it is not desirable to purposely cause an MSIV isolation when the MSIVs are open. This equipment design does not apply on Unit 1, therefore this step does not exist on the Unit 1 flow chart, resulting in step numbering differences between the Unit 1 and 2 flowcharts from Step RC/P-10 through RC/P-16.

STEP SCCP-24

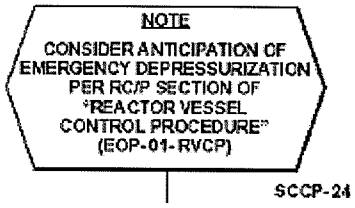

STEP BASES:

As conditions which will require Emergency Depressurization are approached it is appropriate to rapidly reject as much heat energy as possible from the reactor vessel to a heat sink other than the suppression pool. Such action preserves the heat capacity of the suppression pool for as long as possible, until a requirement for Emergency Depressurization actually exists.

Discharging reactor steam to the main condenser through the main turbine bypass valves is the most viable method of rapidly reducing reactor pressure without adding heat to the suppression pool. Other mechanisms have less heat removal capacity, take longer to establish the appropriate valve lineup, etc.

In order to *"Anticipate Emergency Depressurization"* per EOP-01-RVCP, the following conditions must be met:

a. The MSIVs must be open.

b. The main turbine bypass valves must be operational.

c. The main condenser must be available.

d. The reactor must remain shutdown for all possible conditions of coolant temperature without boron.

Bypassing or defeating isolation interlocks is not authorized during *"Anticipate Emergency Depressurization"* actions.

Categories

K/A:	295033 A1.05	Tier / Group:	T1G2
RO Rating:	3.9	SRO Rating:	4.0
LP Obj:	CLS-LP-300-M*08A	Source:	NEW
Cog Level:	HIGH	Category 8:	Y

59. Which one of the following annunciators indicates a condition that trips the Reactor Building Supply and Exhaust Fans without automatically starting the Standby Gas Treatment System?

A. *AREA RAD RX BLDG HIGH*

B. *RX BLDG VENT TEMP HIGH*

C. *RX BLDG DIFF PRESS HIGH/LOW*

D. *PROCESS RX BLDG VENT RAD HIGH*

Feedback

K/A: 295035 A1.01
Ability to operate and/or monitor the following as they apply to SECONDARY CONTAINMENT HIGH DIFFERENTIAL PRESSURE:
Secondary containment ventilation system
(CFR: 41.7 / 45.6)

RO/SRO Rating: 3.6/3.6

Objective: CLS-LP-037.1*06a
4. List the signals and setpoints that will cause the Reactor Building Ventilation System to automatically isolate.
6. List the signals that will cause the following to automatically stop:
   a. Reactor Building supply fans
   b. Reactor Building exhaust fans

Reference:
1(2)OP-, Revision , Page , Section

Cog Level: Low

Explanation:
Rx Bldg ARMs have no automatic function. Vent Temp high will isolate secondary containment and initiate SBGT. Process Rx Bldg vent rad hi is entry into SCCP but does not trip fans (Hi-Hi isolates secondary containment and initiates SBGT). Fans trip on excessive building differential pressure (+4 inches or -4 inches) but SBGT does not start (APP UA-12 3-3)

Distractor Analysis:
Choice A: Plausible because is confused with Exhaust Rad Hi which will trip RB HVAC & auto start SBGT.

Choice B: Plausible because high RB vent temperature is not required by TS, but does trip RB HVAC & auto start SBGT.

Choice C: Correct Answer

Choice D: Plausible because Process RB Vent Rad high is a SCCP entry condition and is easily confused with Process RB Vent Rad Hi-Hi which does trip RB HVAC & auto start SBGT.

SRO Only Basis: N/A

Notes

AREA RAD RX BLDG HIGH

AUTO ACTIONS

NONE

RX BLDG VENT TEMP HIGH

AUTO ACTIONS

1. Reactor Building ventilation system trips and isolates.
2. Standby gas treatment trains start.
3. If open, the inboard and outboard primary containment purge and vent valves close.
4. PASS sample valves to torus close.

RX BLDG DIFF PRESS HIGH/LOW
(Reactor Building Differential Pressure High/Low)

AUTO ACTIONS

1. Reactor Building supply and exhaust fans trip.

PROCESS RX BLDG VENT RAD HIGH

AUTO ACTIONS

NONE

Categories

K/A:	295035 A1.01	Tier / Group:	T1G2
RO Rating:	3.6	SRO Rating:	3.6
LP Obj:	CLS-LP-037.1*06A	Source:	BANK
Cog Level:	LOW	Category 8:	Y

60. Which one of the following identifies positive reactivity effects that SLC injection must overcome during an ATWS?

A. 100% Voids and Iodine decay

B. 100% Voids and Xenon decay

C. Withdrawn Control Rods and Iodine decay

D. Withdrawn Control Rods and Xenon decay

Feedback

K/A: 295037 K1.03
Knowledge of the operational implications of the following concepts as they apply to SCRAM CONDITION PRESENT AND REACTOR POWER ABOVE APRM DOWNSCALE OR UNKNOWN :
Boron effects on reactor power (SBLC)
(CFR: 41.8 to 41.10)

RO/SRO Rating: 4.2/4.4

Objective: CLS-LP-005*03
03. List the positive reactivity effects that must be overcome by SLC injection.

Reference:
SD-5, Revision , Page 7, Section 1.3

Cog Level: Low

Explanation:
Requires understanding of conditions which cause positive and negative reactivity effects.
When the contents of the storage tank have been injected into the reactor vessel, a specified minimum average concentration equivalent to 720 ppm natural boron provides an adequate shutdown margin to compensate for the positive reactivity effects of xenon decay, zero percent voids, reduced Doppler effect and moderator temperature decrease to 70°F, and control rods fully withdrawn. Unless procedures direct otherwise, the total contents of the storage tank should be injected anytime the system is needed to ensure sufficient neutron absorber is injected to maintain the reactor shutdown during the cooldown.
Positive Reactivity effects overcome by SLC:
1. 0% Voids
2. Xe Decay
3. Moderator Temperature
4. Reduced Doppler
5. Control Rods not inserted

Distractor Analysis:
Choice A: Plausible because 100% voids provides for negative reactivity effect which is easily confused with 0% voids. and Iodine decay produces Xenon which also provides negative reactivity effect.

Choice B: Plausible because 100% voids provides for significant negative reactivity and Xenon decay is correct providing positive reactivity effect.

Choice C: Plausible because withdrawn control rods is correct providing positive reactivity effect and Iodine decay produces Xenon which provides negative reactivity effect.

Choice D: Correct Answer

SRO Only Basis: N/A

Notes

When the contents of the storage tank have been injected into the reactor vessel, a specified minimum average concentration equivalent to 720 ppm natural boron provides an adequate shutdown margin to compensate for the positive reactivity effects of xenon decay, zero percent voids, reduced Doppler effect and moderator temperature decrease to 70°F, and control rods fully withdrawn, Figure 05-4. Unless procedures direct otherwise, the total contents of the storage tank should be injected anytime the system is needed to ensure sufficient neutron absorber is injected to maintain the reactor shutdown during the cooldown.

The SLC boron solution storage tank, test tank, the two positive displacement pumps, Squib valves, and the associated local valves and controls are located on the 80 foot, east elevation of the reactor building. The SLC System solution is discharged into the reactor vessel near the bottom of the core shroud where it mixes with rising coolant, enters the core and absorbs thermal neutrons to shutdown the reactor by terminating the nuclear fission chain reaction, Figure 05-5.

2.0 COMPONENT DESCRIPTION/DESIGN DATA

2.1 SLC Storage Tank (Figure 05-6) (Figure 05-10)

The SLC Storage Tank is located on the 80-foot elevation of the reactor building. This storage tank provides a reservoir for preparing, storing, and maintaining the sodium pentaborate solution in a state of constant readiness. It has a top hatch for the addition of chemicals, an air sparger for mixing of the solution, two submersed electric heaters and assorted system monitoring instrumentation. The tank has a bubbler tube for level indication.

2.2 Air Sparger

An air sparger is provided in the SLC storage tank for mixing the solution in the tank. The air sparger is supplied from plant Service Air.

2.3 Heater

The heater system normally maintains the solution temperature between 66°F and 80°F.

There are two electric heaters in the storage tank. The A heater is 10KW and has both automatic and manual controls. The B heater is 40 KW manual control only. The B heater is used to heat the solution in the tank during chemical addition (endothermic reaction) and to backup the A heater.

the containment.

COLD SHUTDOWN BORON WEIGHT

The least weight of soluble boron which, if injected into the reactor and mixed uniformly, will maintain the reactor shutdown under all conditions. This weight is utilized to assure the reactor will remain shutdown irrespective of control rod position or reactor water temperature.

CONDENSATE SYSTEM

For the purpose of this EOP, the Condensate System consists of a minimum of one condensate pump capable of injecting water into the reactor.

HOT SHUTDOWN BORON WEIGHT

The least weight of soluble boron which, if injected into the reactor and mixed uniformly, will maintain the reactor shutdown under hot standby conditions. This weight is utilized to assure the reactor will be shutdown irrespective of control rod position when reactor water level is raised to uniformly mix the injected boron.

Categories

K/A:	295037 K1.03	Tier / Group:	T1G1
RO Rating:	4.2	SRO Rating:	4.4
LP Obj:	CLS-LP-005*03	Source:	NEW
Cog Level:	LOW	Category 8:	Y

61. Unit Two startup is in progress with both Mechanical Vacuum Pumps (MVPs) in service establishing main condenser vacuum.

Which one of the following identifies:
(1) When both MVPs will automatically trip and
(2) the reason this action is required?

A. (1) Two MSL Rad Hi-Hi conditions in one division
(2) To reduce off-site release rates.

B. (1) Two MSL Rad Hi-Hi conditions in one division
(2) To minimize hydrogen explosion hazards.

C. (1) One MSL Rad Hi-Hi condition in each division
(2) To reduce off-site release rates.

D. (1) One MSL Rad Hi-Hi condition in each division
(2) To minimize hydrogen explosion hazards.

Feedback

K/A: 295038 K2.10
Knowledge of the interrelations between HIGH OFF SITE RELEASE RATE and the following:
Condenser air removal.
(CFR: 41.7 / 45.8)

RO/SRO Rating: 3.2/3.4

Objective: CLS-LP-30*11b
11. Given the necessary plant conditions, describe the effect that a malfunction or loss of the Condenser Air Removal/Augmented Off-Gas System would have on the following:
    b. Radioactive Release Rates

Reference:
SD-30

Cog Level: High

Explanation:
Hi-Hi trip on the MSL Rad channels will cause both Mechanical vacuum pumps to trip and OG-V7 valve to close. The logic trips the MVPs when a hi-hi condition is present in each division. The MVPs discharge via the 1.8 minute holdup line to the main stack. MSL rad high conditions directly impact off-site release rates with the MVPs in service due to no discharge path processing. MVPs are only allowed to be operated below 5% reactor power due no hydrogen explosion hazards present.

Distractor Analysis:
Choice A: Plausible due to two MSL Rad Hi-Hi in one division only satisfies inbd-otbd logic which is easily confused with coincidence logic and reducing off-site release rates is correct.

Choice B: Plausible due to two MSL Rad Hi-Hi in one division only satisfies inbd-otbd logic which is easily confused with coincidence logic and reducing hydrogen explosion hazards is the reason MVPs are not operated at >5% reactor power.

Choice C: Correct answer.
.
Choice D: Plausible due to the MSL Hi-Hi correct and reducing hydrogen explosion hazards is the reason MVPs are not operated at >5% reactor power.

SRO Only Basis: N/A

Notes

3.2.2 Mechanical Vacuum Pump Assembly Control (Figure 30-12)

Operation of mechanical vacuum pumps (MVP) A & B are controlled by three Control Switches (CS-354, CS-368, and CS-369) located on Control Room Panel XU-2.

Control Switch CS-354 is a two position (CLOSE-HOG) switch that controls the position of Hogging Valve V7. The HOG position opens V7, starts the MVPs and then the condensate return (seal) pump.

> CAUTION
>
> If these control switches are held in the start position, the MVP will start with OG-V7 closed, and when released the associated pump immediately stops.

Control Switches CS-368 and CS-369 are three position (STOP-N-START), spring return to Neutral type switches that control the MVPs.

The mechanical vacuum pumps are placed in service by placing CS-354 to the HOG position. This opens Hogging Valve (V7), starts both MVPs and their associated condensate return pumps.

There are three automatic trips associated with the mechanical vacuum pumps for each BNP unit. They are as follows:

- Low MVP oil pressure (time delay for 3 seconds on startup)
- Main Steam Line radiation Hi-Hi/INOP
- Hogging Valve OG-V7 fully closed

If both MVPs are not required, one pump may be stopped by momentarily placing the associated control switch to STOP. This action breaks the seal in circuit and stops the pump.

A Main Steam Line high-high radiation or MSLRM INOP condition will prevent the opening of the hogging valve OG-V7 and prevent start of the mechanical vacuum pump. If already running, the signal will trip the MVP, shut the Hogging Valve, OG-V7, and stop the condensate return pump.

4.1.3 Procedural Cautions

1. No open flames or lighted objects should be permitted near this system or its components at any time due to the presence of hydrogen. Hydrogen concentrations in excess of 4% present a significant explosion hazard.

2. If recombiner operation is required with any hydrogen/oxygen analyzers inoperative, the recombiner temperature shall be monitored closely and if temperature shows a large fluctuation during steady state operations, shutdown of the affected train should be considered.

3. Due to the analysis method, the H_2/O_2 analyzers do not give a "real time" output, but take a sample and update the outputs for H_2 and O_2 concentration about once every 5 minutes.

4. When the H_2/O_2 analyzer keylock switch is in DATA ENTRY, the analyzer program can be inadvertently altered or the analyzer operation can be inadvertently faulted by improper operation of the analyzer keyboard. Faults may not be noticeable from observation of analyzer operation.

5. Operation of a SJAE in the warm-up mode with the opposite SJAE train in service will cause erroneous SJAE activity indication due to sample flow dilution from the opening of the idle SJAE sample valve.

6. Mechanical vacuum pump operation when the reactor is producing more than 5% thermal power poses a potential hazard due to hydrogen explosion.

7. The Hydrogen Water Chemistry System does not have the capability for adjusting oxygen injection flow into a SJAE that is being placed into service. To prevent high hydrogen concentration in the SJAE that is being started, the HWC system must be removed from service

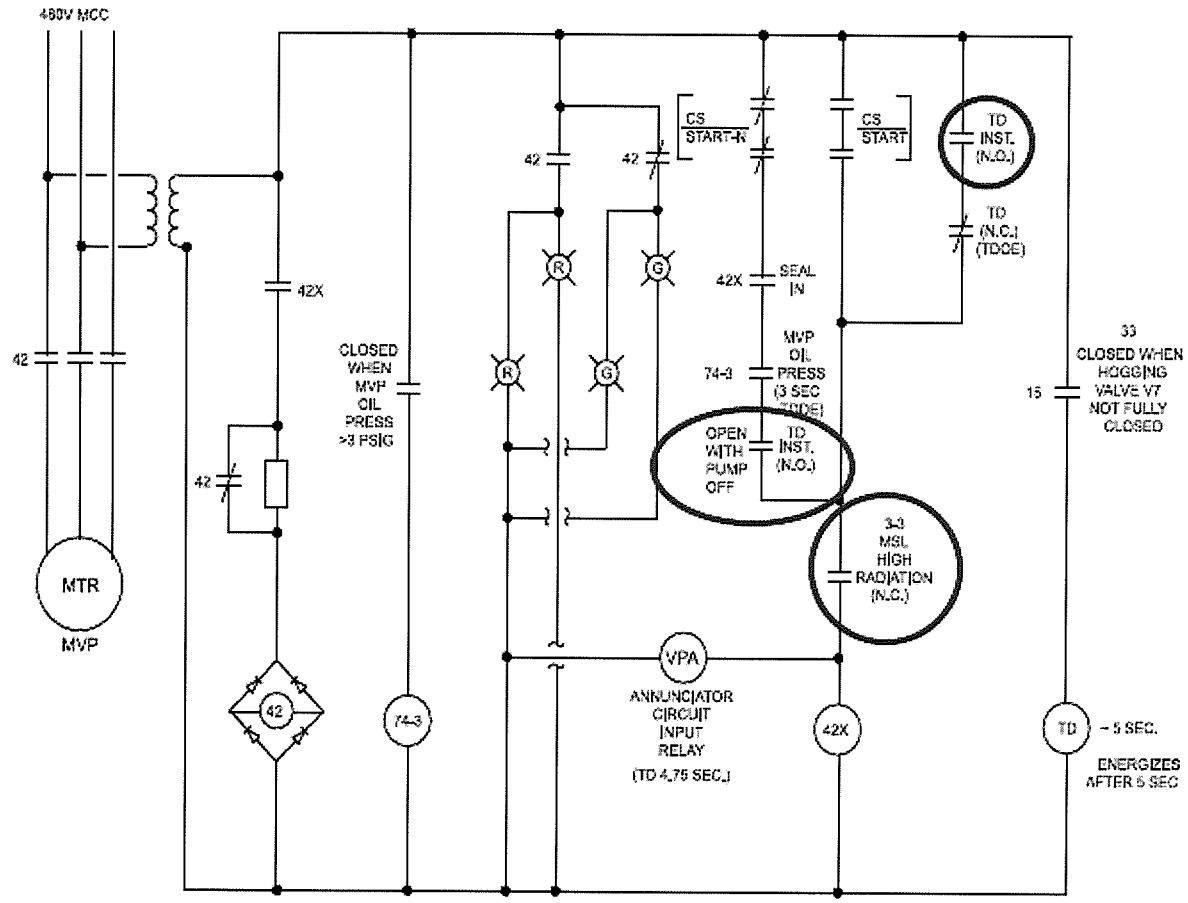

FIGURE 30-12
Mechanical Vacuum Pump Control Circuit

INSTRUMENT NUMBER: D12-RM-K603A,B,C,D

INSTRUMENT NAME: Main Steam Line Radiation HI-HI/INOP

TS REFERENCE: 3.3.7.2; TRM Table 3.3.7.2-1.1

TRIP CHANNEL: A1-K603A B1-K603B
A2-K603C B2-K603D

TRIP LOGIC: A1 or A2 and B1 or B2 = Trips both mechanical vacuum pumps and closes OG-V7

Place channel in tripped condition by: Pull fuse

CHANNEL	INSTRUMENT NUMBER	TRIP UNIT	ACTION	PANEL	FUNCTION	SETPOINT
A1	D12-RM-K603A	N/A	A71B-F19A	H12-P609	Trips Mechanical Vacuum Pumps and closes OG-V7	2.8 x Background
A2	D12-RM-K603C	N/A	A71B-F19C	H12-P609	Trips Mechanical Vacuum Pumps and closes OG-V7	2.8 x Background
B1	D12-RM-K603B	N/A	A71B-F19B	H12-P611	Trips Mechanical Vacuum Pumps and closes OG-V7	2.8 x Background
B2	D12-RM-K603D	N/A	A71B-F19D	H12-P611	Trips Mechanical Vacuum Pumps and closes OG-V7	2.8 x Background

COMMENTS: If both channels in a trip system are inop, both channels must be tripped to assure all required functions will occur.

REFERENCE DRAWINGS: FP-60068

Categories

K/A:	295038 K2.10	Tier / Group:	T1G1
RO Rating:	3.2	SRO Rating:	3.4
LP Obj:	CLS-LP-30*11B	Source:	NEW
Cog Level:	HIGH	Category 8:	Y

62. Unit Two is operating at rated power when plugging of C12-D006A, Supply Air Filter, causes the *SCRAM VALVE PIL AIR HDR PRESS HI/LO* alarm to be received.

Which one of the following identifies the impact of lowering scram air header pressure as the filter continues to plug?

The CRD Scram Outlet Valves will fail __(1)__ on a low scram air header pressure and cause the DW Lower Vent Dampers to reposition to the __(2)__ position.

A.✓ (1) open
(2) MAX

B. (1) open
(2) MIN

C. (1) closed
(2) MAX

D. (1) closed
(2) MIN

Feedback

K/A: 300000 K5.13
Knowledge of the operational implications of the following concepts as they apply to the INSTRUMENT AIR SYSTEM:
Filters
(CFR: 41.5 / 45.3)

RO/SRO Rating: 2.9/2.9

Objective: CLS-LP-08 Obj. 7d / g
State the normal and fail position for the following components:
CRD Scram Outlet Valves

Reference:
APP-A-07 / SD-08

Cog Level: Memory

Explanation:
Loss of the air supply will result in the in-service flow control valve closing. With no dirve water pressure RMCS will not be able to move rods but they could still be scrammed. If air pressure would continue to lower below 40 psig the scram inlets and outlet valves would fail open on the loss of air. The lower DW dampers go to the MAX position on a scram as sensed by pressure switches in the scram air header.

Distractor Analysis:
Choice A: Correct answer, see explanation.

Choice B: Plausible since it does fail open and it may seem correct that more cooling would be needed in the upper part of the DW since hot air rises.

Choice C: Plausible because some valves do fail closed (CRD flow conrol valve) and the dampers do go to the MAX position

Choice D: Plausible because some valves do fail closed (CRD flow conrol valve) and it may seem correct that more cooling would be needed in the upper part of the DW since hot air rises.

Notes

From the APP

1.3.2 **IF** Instrument Air Header pressure is normal **AND** Scram Pilot Air Header pressure is less than 65 psig, **THEN** *PCV-IA-2878* has failed in the closed direction **OR** the Supply Air Filter *C12-D006A(B)* is dirty.

2APP-A-07	Rev. 32	Page 31 of 45

From SD-08

2.12 **Scram Air Header**

The Scram Air Header is a normally pressurized air header supplying filtered air to the scram inlet and outlet valves and the SDV vent and drain valves. Air to this header is supplied from both Non-Interruptible Instrument Air header divisions. The supplied air maintains the scram valves closed and the SDV vent and drain valves open until a scram signal is received. (Reference Figure 08-2)

SD-08	Rev. 10	Page 18 of 68

The Drywell Lower Vent dampers can be positioned to either MIN or MAX position by a two position control switch on Panel XU-3. Normal plant operating position for these dampers is the MIN position. Placing these dampers to MAX position during plant operation may produce extreme temperature excursions in the upper drywell regions. Low scram air header pressure will reposition these dampers to the MAX position and automatically start and idle drywell cooling fan selected for AUTO.

Categories

K/A:	300000 K5.13	Tier / Group:	T2G1
RO Rating:	2.9	SRO Rating:	2.9
LP Obj:	08-7	Source:	BANK
Cog Level:	LOW	Category 8:	Y

63. Which one of the following choices correctly completes the statements below?

If system pressure drops to __(1)__ psig the standby CSW pump will auto start.
If pressure remains below this setpoint for __(2)__ seconds the SW-V3(V4), SW to TBCCW Hxs Otbd(Inbd) Isol, will reposition to their throttled positions.

A. (1) 65
(2) 30

B. (1) 65
(2) 70

C. (1) 40
(2) 30

D. (1) 40
(2) 70

Feedback

K/A: 400000 K4.01
Knowledge of CCWS design feature(s) and or interlocks which provide for the following:
Automatic start of standby pump
(CFR: 41.7)

RO/SRO Rating: 3.4/3.9

Objective: CLS-LP-43 Obj 6d
Given plant conditions, predict whether any of the following pumps should start:
d. Conventional Service Water Pumps

Reference:
SD-43 / AOP-19

Cog Level: Memory

Explanation:
The CSW pumps will auto start at 40 psig, the RCC pumps start at 65 psig.
The SW-V3/4 throttle to a mid position if the low pressure exists for 70 seconds.
The DG cooling valves swap to the opposite unit after low pressure for 30 seconds.

Distractor Analysis:
Choice A: Plausible because the RCC pumps auto start at 65 psig and the DG cooling valves swap to the opposite unit after low pressure for 30 seconds.

Choice B: Plausible because the RCC pumps auto start at 65 psig.

Choice C: Plausible because the DG cooling valves swap to the opposite unit after low pressure for 30 seconds.

Choice D: Correct answer, see explanation.

Notes

2.0 AUTOMATIC ACTIONS

2.1 Standby pump selected to the conventional service water header starts at 40 psig.

2.3 **IF** conventional service water header pressure remains below 40 psig for 70 seconds, **THEN**:

- *SW TO TBCCW HXS OTBD ISOL, SW-V3* closes to a throttled position
- *SW TO TBCCW HXS INBD ISOL, SW-V4* closes to a throttled position

0AOP-19.0	Rev. 18	Page 2 of 7

From AOP-16:

2.1 **IF** system pressure decreases to 65 psig, **THEN** the standby RBCCW pump will start.

From the SD-43:

3. Diesel Generator Cooling Water Supply Valves

Downstream of the Diesel Generator cooling water header valve, each diesel generator has two supply Valves 1(2)-SW-V679 for Diesel Generator 1, 1(2)-SW-V680 for Diesel Generator 2, 1(2)-SW-V681 for Diesel Generator 3, and 1(2)-SW-V682 for Diesel Generator 4. One supply valve is designated as the normal supply valve and will open when the diesel generator start is initiated and the diesel speed reaches 500 rpm. The other valve is the alternate supply valve. If sufficient pressure of 5.6 psig is not reached in ≈ 30 seconds, the alternate supply valve will open. Once the alternate supply valve is full open, the normal supply valve will close. This transfer sequence is initiated anytime service water pressure is lost when a diesel generator is operating. When the engine is shutdown and speed drops below 500 rpm, the open valve will automatically close.

Initial service water cooling to the diesel generators (i.e., 10 minutes)

SD-43	Rev. 17	Page 21 of 78

Categories

K/A:	400000 K4.01	Tier / Group:	T2G1
RO Rating:	3.4	SRO Rating:	3.9
LP Obj:	43-6D	Source:	BANK
Cog Level:	LOW	Category 8:	Y

64. Which one of the following identifies the type of detector and how the fire suppression system operates for a SBGT Train charcoal fire?

The SBGT Trains utilize __(1)__ to indicate a fire in the filter bank.
The Fire Suppression System's deluge valve for the associated SBGT carbon bank will automatically open and suppression system injection begins __(2)__.

A. (1) temperature switches
   (2) ONLY if the affected Train is shutdown

B. (1) temperature switches
   (2) following local valve manipulations

C. (1) ionization detectors
   (2) ONLY if the affected Train is shutdown

D. (1) ionization detectors
   (2) following local valve manipulations

Feedback

K/A: 600000 K2.01
Knowledge of the interrelations between PLANT FIRE ON SITE and the following:
Sensors / detectors and valves

RO/SRO Rating: 2.6/2.7

Objective: CLS-LP-41*21
21. Given plant conditions, predict the response of the Fire Suppression and Fire Detection Systems.
07. State the reason(s):
    a. For obtaining SCO's permission to manually operate the SBGT deluge valves.

Reference:
SD-10, Revision 5, Page 18, Section 3.2.5

Cog Level: Low

Explanation:
There are two temperature switches to monitor the temperature of each Carbon Filter in each SBGT train.(TS 3/4)
Switches VA-TS-5302-1 (VA-TS-5302-2), and VA-TS-5297-1 (VA-TS-5297-2) monitor Carbon Filter Bank No. 1 and actuate at 210°F, rising, to indicate a fire in the filter bank. Actuation of any switch will automatically open the Fire Suppression System's deluge valve for the associated carbon bank (note that the associated isolation valves must be opened for this system to inject) and trip the associated Fan and Heater unless compartment inlet temperature is
> 180°F. Local and remote lights indicate switch actuation.

Distractor Analysis:
Choice A: Plausible because temperature switches is correct. High temperature trips the train with inlet temp < 180°F but suppression flow is not dependant on train status due to Local Deluge System Manual Operation IAW 1(2)OP-10.

Choice B: Correct Answer

Choice C: Plausible because Ionization detectors detect the early products of combustion before they become visible smoke. High temperature trips the train with inlet temp < 180°F but suppression flow is not dependant on train status due to Local Deluge System Manual Operation IAW 1(2)OP-10.

Choice D: Plausible because Ionization detectors detect the early products of combustion before they become visible smoke and local manipulations is correct.

SRO Only Basis: N/A

Notes

2.1.8 Deluge Valve System

Each SBGT System is equipped with a deluge system, including two deluge valves. The purpose of the deluge system is to extinguish a fire sensed in the carbon filter compartments. The deluge valves will open automatically, as sensed by rising temperature in the filters, or manually.

NOTE:	The deluge valves are manually isolated. In order for water to flow, the isolation valves for the deluge valve must be manually opened

2.2 Standby Gas Treatment System Flowpaths

2.2.1 Normal Flow Path

Figure 10-1 illustrates the arrangement of components and piping for the various flow paths of the SBGT System.

The normal system intake is from the 50' elevation of the Reactor Building through two motor operated intake isolation dampers (D, H) and into a common inlet duct. All areas of the Reactor Building communicate with this area. The common inlet duct splits and is routed to each Filter train through a motor operated, train inlet isolation damper (C, G).

Each Filter train component is duplicated in each train. Flow entering the Filter train first encounters the Moisture Separator then the electric Heater. Flow then passes through the Prefilter, HEPA Filter No. 1, Charcoal Filters Nos. 1 and 2, and HEPA Filter No. 2.

Flow exiting the filters passes through a duct to the Fan inlet. Flow from the Fan is routed through a check damper and motor operated discharge isolation damper (B, E). From the discharge isolation damper flow is routed to the Plant Stack.

A penetration of the common duct downstream of the fans permits sampling the gas stream with the Post Accident Sampling System (PASS) prior to its entering the Plant Stack. The sample line is isolated by a solenoid operated valve.

2.2.2 Primary Containment Purge (Vent) Flow Path

The inlet to the SBGT Filter trains may be aligned to either the Primary Containment Drywell or the Suppression Chamber air space for purging operation.

3. Carbon Filter Banks

There are two temperature switches to monitor the temperature of each Carbon Filter in each SBGT train.

(TS 3/4)
Switches VA-TS-5302-1 (VA-TS-5302-2), and VA-TS-5297-1 (VA-TS-5297-2) monitor Carbon Filter Bank No. 1 and actuate at 210°F, rising, to indicate a fire in the filter bank. Actuation of <u>any</u> switch will automatically open the Fire Suppression System's deluge valve for the associated carbon bank (note that the associated isolation valves must be opened for this system to inject) and trip the associated Fan and Heater unless compartment inlet temperature is > 180°F. Local and remote lights indicate switch actuation.

(TS 5/6)
Switches VA-TS-5303-1 (VA-TS-5303-2), and VA-TS-5298-1 (VA-TS-5298-2), monitor Carbon Filter Bank No. 2 and actuate at 210°F, rising, to indicate a fire in the #2 filter bank. Actuation of <u>any</u> switch will automatically open the Fire Suppression System's deluge valve for the associated carbon bank (note that the associated isolation valves must be opened for this system to inject) and trip the associated Fan and Heater unless compartment inlet temperature is > 180°F. Local and remote lights indicate switch actuation.

4. HEPA Filter No. 2 Compartment

Switches TSL-3456 (3455) provide annunciation of SBGT Filter train A/B Hi humidity.

3.2.6 Automatic

1. Upon receipt of an automatic initiation signal both trains of SBGT will start.

Unit 1 ONLY

The dampers associated with Unit 1 SBGT System will receive automatic open signals when an initiation signal is received <u>EXCEPT</u> for the train inlet and outlet dampers, (BFVs-1B,1C,1E,and 1G). Should these normally open dampers be manually closed locally via their CLOSE/OPEN pushbuttons, **they will NOT automatically reopen and the associated SBGT will not automatically start.**

Categories

K/A:	600000 K2.01	Tier / Group:	T1G1
RO Rating:	2.6	SRO Rating:	2.7
LP Obj:	CLS-LP-41*21	Source:	NEW
Cog Level:	LOW	Category 8:	Y

65. Unit Two operating at rated power with Main Generator MVAR loading at +300 MVARs.

Which one of the following correctly completes the statement below based on these conditions?

The Main Generator component that would overheat is the __(1)__ and IAW 2OP-27, Generator and Exciter System Operating Procedure, MVARs must be lowered to less than __(2)__.

A. (1) armature
   (2) +70

B. (1) field
   (2) +70

C. (1) armature
   (2) +170

D. (1) field
   (2) +170

Feedback

K/A: 700000 K1.02
Knowledge of the operational implications of the following concepts as they apply to GENERATOR VOLTAGE AND ELECTRIC GRID :
Over-excitation
(CFR: 41.4, 41.5, 41.7, 41.10 / 45.8)

RO/SRO Rating: 3.3/3.4

Objective: CLS-LP-27*11f
11. Given plant conditions, describe the effect that a loss or malfunction of the following may have on the Main Generator:
    f. Voltage regulator (including Under and Over-Excitation)

Reference:
SD-27, Revision 14, Page 22, Section 2.17

Cog Level: High

Explanation:
The limitation placed on lagging MVARs (+ MVARs) of the estimated capability curve, limits operation because of excessive heating that occurs in the generator field. Since the generator is operating in an overexcited condition, a larger field current is necessary to produce the extra KVAR being supplied to the system. with the conditions given, the generator is operating outside the capabilities curve. The minimum gross MVAR requirement is 70 (positive) while the maximum gross MVAR requirement is 170 (positive).

Distractor Analysis:
Choice A: Plausible because the limitation placed on leading MVARs (- MVARs) of the estimated capability curve are less effected by Hydrogen pressure. We see that the curves come together sharply. As the system is required to supply more reactive power to the generator field, the flux in the air gap between the field and stator becomes more distorted. The distortion results in the exposed ends of the stator coils becoming overheated. As field strength is reduced, this heating accelerates. The +70 is the lower end of the operating band for the generator VARS.

Choice B: Plausible because overheating of the field is correct and the +70 is the lower end of the operating band for the generator VARS.

Choice C: Plausible because the limitation placed on leading MVARs (- MVARs) of the estimated capability curve are less effected by Hydrogen pressure. We see that the curves come together sharply. As the system is required to supply more reactive power to the generator field, the flux in the air gap between the field and stator becomes more distorted. The distortion results in the exposed ends of the stator coils becoming overheated. As field strength is reduced, this heating accelerates. The +170 is the high end of the operating band for the generator VARS.

Choice D: Correct Answer

SRO Only Basis: N/A

Notes

GENERATOR REACTIVE CAPABILITY CURVE

ATB 4 POLE 1039000 KVA 1800 RPM 24000 VOLTS 0.964PF
0.53 SCR, 60 PSIG HYDROGEN PRESSURE, 500 VOLTS EXCITATION

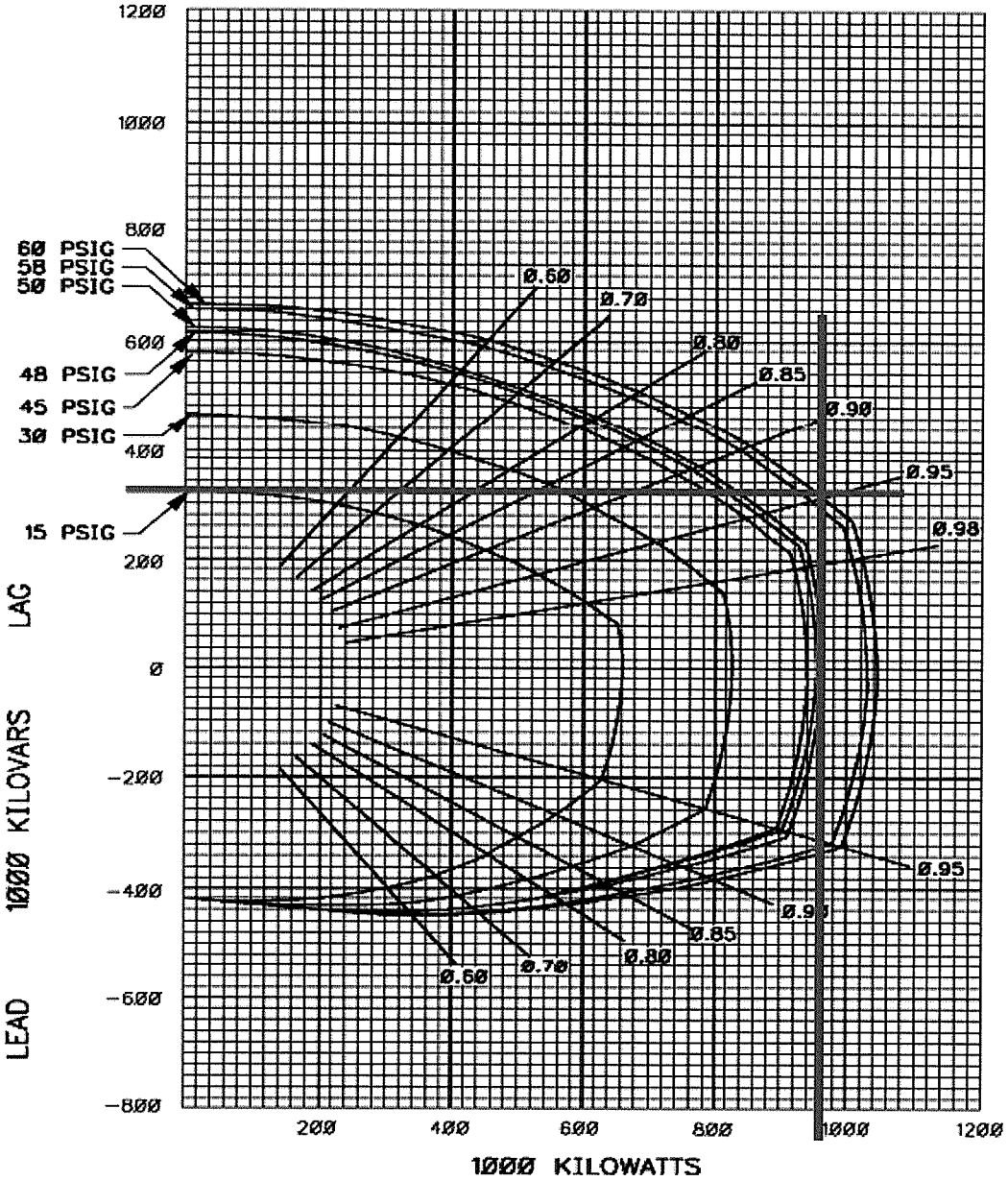

From the SD:

> The limitation placed on lagging MVARs (+ MVARs) of the estimated capability curve, limits operation because of excessive heating that occurs in the generator field. Since the generator is operating in an overexcited condition, a larger field current is necessary to produce the extra KVAR being supplied to the system. This results in greater heating of the rotor windings.

SD-27	Rev. 14	Page 48 of 127

From the OP:

3.1 Maintain generator loading within the limits of Figure 1 and the following:

NOTE:	The System Operations Load Dispatcher should be contacted if the MVAR loading can **NOT** be maintained within prescribed limits.

3.1.1 The minimum gross MVAR requirement is 70 (positive) as read on the main generator terminals.

3.1.2 The maximum gross MVAR requirement is 170 (positive) as read on the main generator terminals.

2OP-27	Rev. 58	Page 4 of 48

Categories

K/A:	700000 K1.02	Tier / Group:	T1G1
RO Rating:	3.3	SRO Rating:	3.4
LP Obj:	CLS-LP-27*11F	Source:	NEW
Cog Level:	HIGH	Category 8:	

66. Which one of the following is the purpose of the High Pressure Coolant Injection (HPCI) System?

HPCI is designed to provide sufficient coolant injection to maintain the Reactor core covered during a __(1)__ Loss-Of-Coolant-Accident to maintain fuel cladding temperatures below __(2)__.

A. (1) small break
   (2) 1800°F

B.✓ (1) small break
   (2) 2200°F

C. (1) large break
   (2) 1800°F

D. (1) large break
   (2) 2200°F

Feedback

K/A: G2.01.27
Conduct of Operations
Knowledge of system purpose and/or function.
(CFR: 41.7)

RO/SRO Rating: 3.9/4.0

Objective: CLS-LP-019*01
1. State the purpose of the High Pressure Coolant Injection (HPCI) System.

Reference:
SD-19, Revision 16, Page 6, Section 1.2

Cog Level: Low

Explanation:
The High Pressure Coolant Injection (HPCI) System was designed to provide sufficient coolant injection to maintain the Reactor core covered during a small line break Loss-Of-Coolant-Accident (LOCA) which does not result in rapid vessel depressurization, thus maintaining fuel cladding temperatures below 2200°F. The original design basis of the HPCI System was to provide part of the Emergency Core Cooling System (ECCS) function. HPCI system operation mitigated small break LOCAs where the depressurization function [Automatic Depressurization System (ADS) / SRVs] was assumed to fail.

Distractor Analysis:
Choice A: Plausible because small break is correct, and 1800°F is the number for if adequate core cooling can not be maintained by core submergence.

Choice B: Correct Answer

Choice C: Plausible because HPCI is a high capacity, high pressure injection system which is easily mistaken for large break LOCA makeup requirements, and 1800°F is the number for if adequate core cooling can not be maintained by core submergence.

Choice D: Plausible because HPCI is a high capacity, high pressure injection system which is easily mistaken for large break LOCA makeup requirements, and 2200°F is the temperature that cladding will not exceed with core submergence.

SRO Only Basis: N/A

Notes

1.0 INTRODUCTION

1.1 System Purpose

The High Pressure Coolant Injection (HPCI) System was designed to provide sufficient coolant injection to maintain the Reactor core covered during a small line break Loss-Of-Coolant-Accident (LOCA) which does not result in rapid vessel depressurization, thus maintaining fuel cladding temperatures below 2200°F.

MINIMUM ZERO-INJECTION REACTOR WATER LEVEL

The lowest reactor water level at which the covered portion of the reactor core will generate sufficient steam to preclude any clad temperature in the uncovered portion of the core from exceeding 1800°F. This water level is used by the Steam Cooling Procedure to preclude significant fuel damage and hydrogen generation for as long as possible (Unit 1 only: Figure 19; Unit 2 only: Figure 19A).

Categories

K/A:	G2.01.27	Tier / Group:	T3
RO Rating:	3.9	SRO Rating:	4.0
LP Obj:	CLS-LP-019*01	Source:	NEW
Cog Level:	LOW	Category 8:	

67. LOCA conditions exist on Unit One. CREV has failed to auto start and the CRS has ordered CREV to be manually started per the Hard Card.

Which one of the following identifies:
(1) the action(s) required to start the CB Emerg Recirc Fan and
(2) the desired position indication for the CB Emerg Recirc Damper (VA-2J-D-CB)?

A. (1) Place the CB Emerg Recirc Fan control switch on Unit Two XU-3 panel to On
(2) Green

B. (1) Place the CB Emerg Recirc Fan control switch on Unit Two XU-3 panel to On
(2) Red

C. (1) Simultaneously place both Units' CB Emerg Recirc Fan control switches on their respective XU-3 panel to On
(2) Green

D. (1) Simultaneously place both Units' CB Emerg Recirc Fan control switches on their respective XU-3 panel to On
(2) Red

Feedback

K/A: G2.01.31
Conduct of Operations
Ability to locate control room switches, controls, and indications, and to determine that they correctly reflect the desired plant lineup.
(CFR: 41.10 / 45.12)

RO/SRO Rating: 4.6/4.3

Objective: CLS-LP-37, Obj 12d
Explain the following:
d. How to place the Control Room Ventilation system in Recirculation Mode.

Reference:
0OP-37

Cog Level: Comprehensive

Explanation:
The controls for the CREV system are on U2 only. Indication for the CREV System is on both units. The emergency recirc damper will open when the fan is started and the open indication is red. The normal makeup damper closes on starting the fan in which the closed indication is green.
The Control Building Mechanical Equipment Room Vent Fans can only be stopped by simultaneously placing both Units' control switches in OFF.

Distractor Analysis:
Choice A: Plausible because the control switch is located on U2, but the recirc damper will open which is red. The normal makeup damper closes which is a green indication.

Choice B: Correct answer, see explanation.

Choice C: Plausible because the CB Mechanical Equipment Room Vent Fans can only be stopped by simultaneously operating both Units' control switches and the normal makeup damper closes which is a green indication.

Choice D: Plausible because the CB Mechanical Equipment Room Vent Fans can only be stopped by simultaneously operating both Units' control switches and the recirc damper does open which is a red indication.

SRO Only Basis: N/A

Notes

5.3.2 Procedural Steps

NOTE:	Indications for the Control Building Ventilation System are located on Panels XU-3 on both units.
NOTE:	Controls for the Mechanical Equipment Room Ventilation Fans and the Control Building Wash Room Exhaust Fan are on XU-3 on Units 1 and 2.
NOTE:	Controls for the Control Building Emergency Recirculation Fans are on Panel XU-3 on Unit 2.
NOTE:	Controls for the Cable Spread Room ventilation fans are on Panel XU-3 for the respective unit.

_____ **PLACE** ONE OF THE CB EMERG RECIRC FANS, 2A(B)-ERF-CB, IN ON.

_____ **ENSURE** CTL RM NORM MU AIR DMPR, 2L-D-CB, CLOSES.

_____ **ENSURE** CB EMERG RECIRC DAMPER, VA-2J-D-CB, OPENS.

NOTE:	The Control Building Mechanical Equipment Room Vent Fans can be stopped only by simultaneously placing both Units' control switches in *OFF*.

Categories

K/A:	G2.01.31	Tier / Group:	T3
RO Rating:	4.6	SRO Rating:	4.3
LP Obj:	37-12	Source:	NEW
Cog Level:	HIGH	Category 8:	

68. Unit One has experienced a Reactor Recirculation Pump trip from 60% power. 1AOP-04.0, Low Core Flow, has been entered and operation is in the Scram Avoidance Region of the power to flow map.

The Reactor Engineer recommends inserting four control rods from position 24 to position 18 to support thermal limit margin improvement.

Which one of the following describes the applicable guidance of 0OI.01.02, Operations Unit Organization and Operating Practices, Attachment 1, Operations Performance Standards?

Attachment 1 of 0OI.01.02:

A. allows the control rods to be continuously inserted to position 18.

B. requires the control rods to be single notched the entire distance to position 18.

C. allows the control rods to be continuously inserted to position 20, then notched to position 18.

D. rod positioning guidance may be waived since an emergency condition exists.

Feedback

K/A: G2.01.39
Conduct of Operations
Knowledge of conservative decision making practices.
(CFR: 41.10 / 43.5 / 45.12)

RO/SRO Rating: 3.6/4.3

Objective: CLS-LP-201-D*24f
24. Explain the following regarding OPS-NGGC-1306 Reactivity Management Program:
    f. The procedural requirements for positioning intermediate control rods.

Reference:
0OI-01.02 Section 5.10 Conservative Decision Making and Reactivity Management,
OPS-NGGC-1306 Section 9.1.4

Cog Level: High

Explanation: Control rod manipulations within the guidance of Attachment 1 are conservative decisions. Per 0OI-01.02, directs that when a control rod is moved four notches or more to an intermediate position (between 02 and 46) the control rod should be stopped at the notch before the intended final position then single notched to the final position. When a rod is being moved three notches or less, the rod should be single notched the entire move. Moving a rod from 24 to 18 is three notches therefore the rod should be single notched. The guidelines for conservative rod movements can be waived only during an emergency (such as an ATWS) or when single notching would violate thermal limits as determined by the Reactor Engineer. The conditions of the question do not constitute an emergency but an abnormal condition. Waiving the requirements of Reactivity Management to prevent a reactor scram constitutes a non-conservative decision

Distractor Analysis:

Choice A: Plausible because since attachment 1 allows continuous insertion to either full in or full out but not under the given conditions.

Choice B: Correct Answer

Choice C: Plausible because since attachment 1 allows continuous insertion to the notch prior to the intended position when moving four or more notches. In the given conditions the rod is only being moved 3 notches.

Choice D: Plausible because since attachment 1 rod movement guidelines may be waived during an emergency.

SRO Only Basis: N/A

Notes

This procedure defines the Reactivity Management Program for the NGG by outlining the responsibilities of key positions involved in reactivity management as well as those programs established which implement a conservative philosophy of reactor operation such that the integrity of the reactor core is assured. **[R13 - SOER 94-1, Recommendation 1]**

NOTE:	The guidance of Steps C.3.i.12 & 13 is waived during emergency conditions or when the Reactor Engineer, with Shift Manager concurrence, has determined that notch operation will result in thermal limits challenges.

12) When moving a control rod four notches or more, stops one notch short, then single notches to final position unless control rod is going to position "48" (full out).

13) When moving a control rod three notch or less, performs separate single notch moves.

Categories

K/A:	G2.01.39	Tier / Group:	T3
RO Rating:	3.6	SRO Rating:	4.3
LP Obj:	CLS-LP-201-D*24F	Source:	PREV
Cog Level:	HIGH	Category 8:	Y

69. Which one of the following identifies where the Electric Fire Pump can be started from?

The Electric Fire Pump can be started locally:

A. ONLY.

B. and at the Unit One RTGB ONLY.

C. and at the Unit Two RTGB ONLY.

D. and at either Unit One or Unit Two RTGBs.

Feedback

K/A: G2.02.04
EQUIPMENT CONTROL
(multi-unit license) **Ability to explain the variations in control board/control room layouts, systems, instrumentation, and procedural actions between units at a facility.**
(CFR: 41.6 / 41.7 / 41.10 / 45.1 / 45.13)

RO/SRO Rating: 3.6/3.6

Objective: None

Reference:
0OP-41, Revision 101, Page 18, Section 8.3
SD-41, Revision 8, Page 28, Section 3.2.2

Cog Level: Low

Explanation:
Ability to explain the variation is identifing the difference in location of the controls.

The Electric Fire Pump can be started
1. Automatically (Low system pressure)
2. Manually from the Control Room (Panel XU-69 which is only located on Unit One)
3. Manually from local control panel.

Distractor Analysis:
Choice A: Plausible because the majority of License Operator simulator training is performed on U2 simulator which does not have Panel XU-69.

Choice B: Correct Answer

Choice C: Plausible because controls would exist on Unit Two however they do not. This is a difference between Units

Choice D: Plausible because controls would exist on Unit Two however they do not. This is a difference between Units

SRO Only Basis: N/A

3.2.2 Electric Fire Pump

Control power for the Electric Fire Pump local panel is provided from the 4160 V feed (E-2 or E-4) through transformers. When the control panel is energized, the pump is in the AUTO mode of operation and will start when fire system pressure is approximately 105 psig. Once the pump starts, it will continue to run until manually stopped at the local control panel. A local "manual start" button will also start the pump. Once started, the pump will run until manually stopped.

There is a safety interlock in the Electric Fire Pump local panel that will not allow power to the Electric Fire Pump if either of the front upper or lower high voltage access panels are open or improperly secured closed.

A pilot lamp on the control panel and one in the control room lights whenever voltage appears on the load side of the circuit breaker and indicates that power is available at the controller.

The electric fire pump may also be started from the Fire Protection panel XU-69 in the Control Room. The remote start push button starts the pump without supervision of the pressure switch and the pump will run until manually stopped at the local panel.

Alarms are provided on Annunciator Panel UA-37:

- MWT BLDG ELEC FIRE PUMP RUNNING - initiated by (PS-1871 at 105 psig ± 10 psig and lowering)
- ELEC FIRE PUMP FAIL TO RUN

Electrical power for the electric fire pump P-2 is supplied from bus E-2 (CB-AH7) and from bus E-4 (CB-AL3). The two feeders terminate at Transfer Switch (LG-5) located adjacent to the Water Treatment Building. Upon loss of power from the normal source (E-2), a manual transfer switch is available to transfer to the alternate source (E-4).

3.2.3 Diesel Fire Pump

The Diesel Fire Pump, P-1, local control panel is equipped with a five-position selector switch (OFF, MANUAL START A, MANUAL START B, TEST, AUTO) and two manual push buttons (MANUAL START and RESET).

With the selector switch in AUTO, the pump will start when system pressure drops to approximately 90 psig. Once started, the engine will continue to run until manually stopped or automatically stopped by engine overspeed. There are no other automatic shutdowns.

The pump may also be started by placing the control switch to MANUAL A or MANUAL B and depressing the MANUAL START pushbutton. The selection of MANUAL A or MANUAL B selects the battery that will crank the diesel until it fires.

Categories

K/A:	G2.02.04	Tier / Group:	T3
RO Rating:	3.6	SRO Rating:	3.6
LP Obj:	NONE	Source:	BANK
Cog Level:	LOW	Category 8:	

70. Which one of the following describes the bases for the Minimum Critical Power Ratio (MCPR) Safety Limit?

The MCPR Safety Limit ensures that _____ during normal operation and during Anticipated Operational Occurrences.

A. 17% cladding oxidation does not occur

B. a coolable core geometry is maintained

C. cladding plastic strain remains less than 1%

D✓ at least 99.9% of the fuel rods do not experience transition boiling

Feedback

K/A: G2.02.25
EQUIPMENT CONTROL
Knowledge of the bases in Technical Specifications for limiting conditions for operations and safety limits.
(CFR: 41.5 / 41.7 / 43.2)

RO/SRO Rating: 3.2/4.2

Objective: CLS-LP-200-B*03
03. State each TS Safety Limit and discuss the basis for each of the Safety Limits.

Reference:
U2 TS Bases

Cog Level: Low

Explanation:
Requires knowledge of TS Safety Limit Bases and the ability to distinguish between Safety Limits and Operating Limits. The MCPR fuel cladding integrity SL ensures that during normal operation and during AOOs, at least 99.9% of the fuel rods in the core do not experience transition boiling.

Distractor Analysis:
Choice A: Plausible because since this is ECCS acceptance criteria.

Choice B: Plausible because since this is ECCS acceptance criteria.

Choice C: Plausible because since this is the basis for the LHGR limit.

Choice D: Correct Answer.

SRO Only Basis: N/A

Notes

B 2.0 SAFETY LIMITS (SLS)

B 2.1.1 Reactor Core SLs

BASES

BACKGROUND

SLs ensure that specified acceptable fuel design limits are not exceeded during steady state operation, normal operational transients, and anticipated operational occurrences (AOOs).

The fuel cladding integrity SL is set such that no fuel damage is calculated to occur if the limit is not violated. Because fuel damage is not directly observable, a stepback approach is used to establish an SL, such that the MCPR is not less than the limit specified in Specification 2.1.1.2. MCPR greater than the specified limit represents a conservative margin relative to the conditions required to maintain fuel cladding integrity.

The fuel cladding is one of the physical barriers that separate the radioactive materials from the environs. The integrity of this cladding barrier is related to its relative freedom from perforations or cracking. Although some corrosion or use related cracking may occur during the life of the cladding, fission product migration from this source is incrementally cumulative and continuously measurable. Fuel cladding perforations, however, can result from thermal stresses, which occur from reactor operation significantly above design conditions.

While fission product migration from cladding perforation is just as measurable as that from use related cracking, the thermally caused cladding perforations signal a threshold beyond which still greater thermal stresses may cause gross, rather than incremental, cladding deterioration. Therefore, the fuel cladding SL is defined with a margin to the conditions that would produce onset of transition boiling (i.e., MCPR = 1.00). These conditions represent a significant departure from the condition intended by design for planned operation. The MCPR fuel cladding integrity SL ensures that during normal operation and during AOOs, at least 99.9% of the fuel rods in the core do not experience transition boiling.

(continued)

B 3.2 POWER DISTRIBUTION LIMITS

B 3.2.3 LINEAR HEAT GENERATION RATE (LHGR)

BASES

BACKGROUND

The LHGR is a measure of the heat generation rate of a fuel rod in a fuel assembly at any axial location. Limits on the LHGR are specified to ensure that fuel design limits are not exceeded anywhere in the core during normal operation, including anticipated operational occurrences (AOOs). Exceeding the LHGR limit could potentially result in fuel damage and subsequent release of radioactive materials. Fuel design limits are specified to ensure that fuel system damage, fuel rod failure or inability to cool the fuel does not occur during the anticipated operating conditions identified in References 1 and 2.

For GNF fuel, LCO 3.2.1 "AVEARGE PLANAR LINEAR HEAT GENERATION RATE (APLHGR)" ensures that the fuel design limits are not exceeded during normal operation and anticipated operational occurrences.

APPLICABLE SAFETY ANALYSES

The analytical methods and assumptions used in evaluating the fuel system design are presented in References 1 and 2. The fuel assembly is designed to ensure (in conjunction with the core nuclear and thermal hydraulic design, plant equipment, instrumentation, and protection system) that the fuel damage will not result in the release of radioactive materials in excess of the guidelines of 10 CFR, Parts 20, 50, and 50.67. The mechanisms that could cause fuel damage during normal operations and operational transients and that are considered in fuel evaluations are:

a. Rupture of the fuel rod cladding caused by strain from the relative expansion of the UO_2 pellet; and

b. Severe overheating of the fuel rod cladding caused by inadequate cooling

A value of 1% plastic strain of the fuel cladding has been defined as the limit below which fuel damage caused by overstraining of the fuel cladding is not expected to occur (Ref. 3).

Fuel design evaluations have been performed and demonstrate that the 1% fuel cladding plastic strain design limit is not exceeded during continuous operation with LHGRs up to the operating limit specified in the COLR. The analysis also includes allowances for short term transient operation above the operating limit to account for AOOs.

(continued)

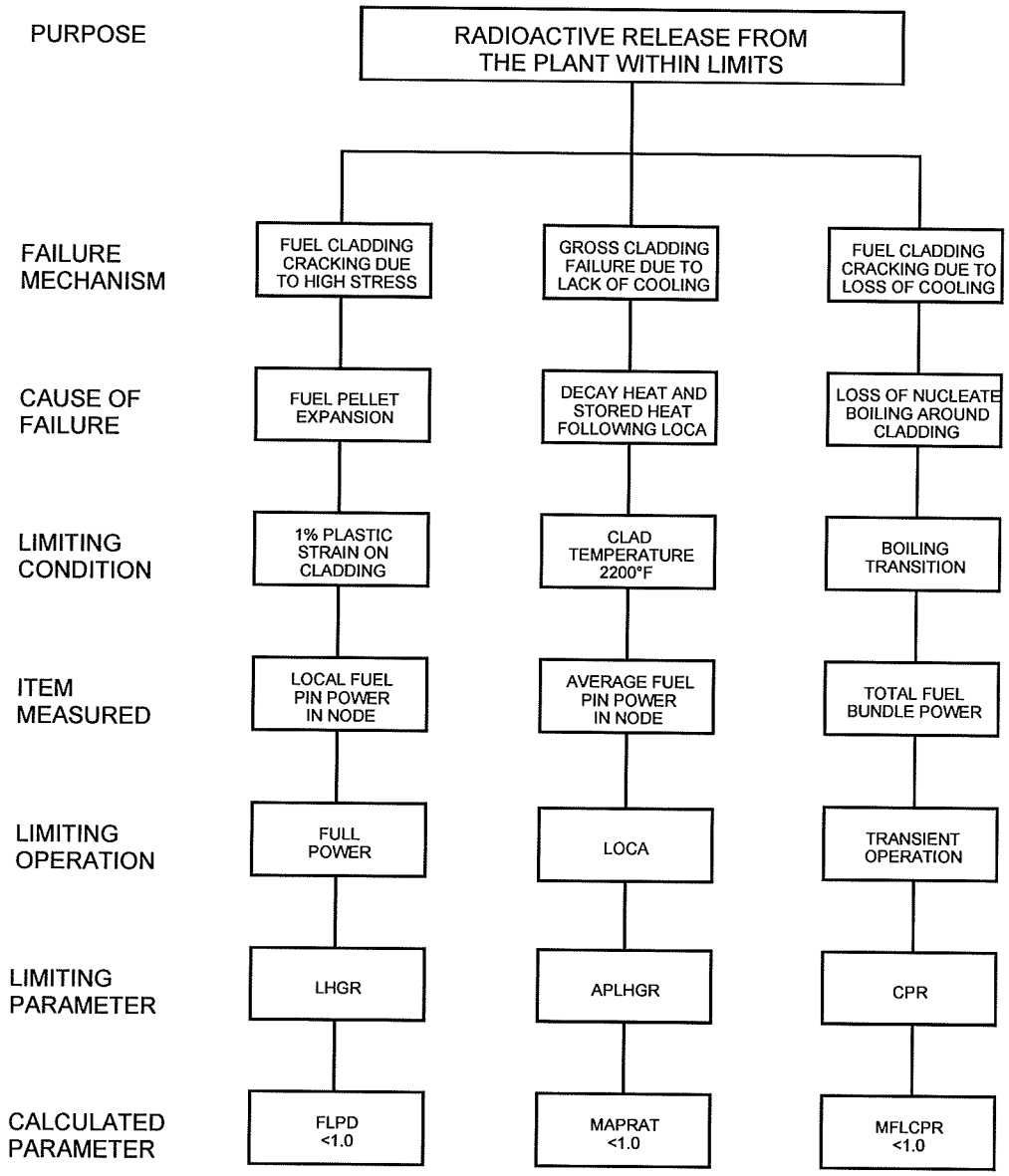

Categories

K/A:	G2.02.25	Tier / Group:	T3
RO Rating:	3.2	SRO Rating:	4.2
LP Obj:	CLS-LP-200-B*03	Source:	NEW
Cog Level:	LOW	Category 8:	

71. Unit Two startup is in progress when the operating CRD Pump trips.

The following plant conditions exist:

CRD pumps	Unavailable
Reactor Pressure	850 psig
Charging header pressure	875 psig
CRD ACCUM LO PRESS/HI LEVEL	In alarm
Control Rod 18-19 Full core display	Amber Accumulator light is lit
Control Rod 18-19 Full core display	Red Full Out light is lit

Which one of the following describes the required action?

A. Immediately insert a manual reactor scram.

B. Wait 20 minutes with no CRD Pump in service and then insert a manual reactor scram.

C. Wait for AO confirmation that the accumulator alarm is due to low pressure and then insert a manual reactor scram.

D. Immediately insert a manual reactor scram when a second accumulator alarm is received on the full core display.

Feedback

K/A: G2.02.39
EQUIPMENT CONTROL
Knowledge of less than or equal to one hour Technical Specification action statements for systems.
(CFR: 41.7 / 41.10 / 43.2 / 45.13)

RO/SRO Rating: 3.9/4.5

Objective: CLS-LP-008-B*10
10. Given plant conditions, determine proper operator actions if no CRD pumps are operating.

Reference:
Unit 2 Tech Spec 3.1.5 (Control Rod Scram Accumulators), Condition D

Cog Level: High

Explanation:
Immediate scram required by Tech Spec 3.1.5, Conditions C & D.
The reactor must be immediately scrammed if either the Required Action and associated Completion Time associated with loss of the CRD charging pump (Required Actions B.1 and C.1) cannot be met. This ensures that all insertable control rods are inserted and that the reactor is in a condition that does not require the active function (i.e., scram) of the control rods.
Scram also required by supplemental actions of 0AOP-02.0.

Distractor Analysis:
Choice A: Correct Answer

Choice B: Plausible because with reactor pressure ≥ 950 psig combined with charging header pressure < 940 psig, 20 minutes is allowed for restoration of charging water header pressure.

Choice C: Plausible because accumulator alarm could be due to High water level which would still provide for sufficient accumulator pressure to fully insert the control rod. Revision 12 of 2AOP-02.0 provided guidance on time frame to IMMEDIATELY insert a manual scram upon receipt of the first HCU low pressure alarm (A-07 6-1, confirmed by amber light on Full Core Display).

Choice D: Plausible because waiting for the second accumulator is applicable to reactor pressures ≥ 950 psig for restoration of charging water header pressure.

SRO Only Basis: N/A

Notes

a. **IF** reactor pressure is less than 950 psig (e.g., during startup or shutdown evolutions), **AND** CRD pressure **CANNOT** be restored to greater than or equal to 940 psig with either CRD Pump, **THEN** upon receipt of the first HCU low pressure alarm (A-07 6-1, confirmed by amber light on Full Core Display) **IMMEDIATELY INSERT** a manual reactor SCRAM immediately. ☐

b. **IF** reactor pressure is greater than or equal to 950 psig, **AND** two or more HCU low pressure alarms (A-07 6-1) are received (confirmed by amber light on Full Core Display), **THEN ENSURE** CRD pressure is restored to greater than or equal to 940 psig within 20 minutes. ☐

ACTIONS (continued)

CONDITION	REQUIRED ACTION		COMPLETION TIME
B. Two or more control rod scram accumulators inoperable with reactor steam dome pressure ≥ 950 psig.	B.1	Restore charging water header pressure to ≥ 940 psig.	20 minutes from discovery of Condition B concurrent with charging water header pressure < 940 psig
	AND		
	B.2.1	----------NOTE---------- Only applicable if the associated control rod scram time was within the limits of Table 3.1.4-1 during the last scram time Surveillance. ---------- Declare the associated control rod scram time "slow."	1 hour
	OR		
	B.2.2	Declare the associated control rod inoperable.	1 hour

(continued)

ACTIONS (continued)

CONDITION	REQUIRED ACTION	COMPLETION TIME
C. One or more control rod scram accumulators inoperable with reactor steam dome pressure < 950 psig.	C.1 Verify all control rods associated with inoperable accumulators are fully inserted.	Immediately upon discovery of charging water header pressure < 940 psig
	AND	
	C.2 Declare the associated control rod inoperable.	1 hour
D. Required Action B.1 or C.1 and associated Completion Time not met.	D.1 ----------NOTE---------- Not applicable if all inoperable control rod scram accumulators are associated with fully inserted control rods. ---------- Manually scram the reactor.	Immediately

SURVEILLANCE REQUIREMENTS

SURVEILLANCE		FREQUENCY
SR 3.1.5.1	Verify each control rod scram accumulator pressure is ≥ 940 psig.	7 days

Categories

K/A:	G2.02.39	Tier / Group:	T3
RO Rating:	3.9	SRO Rating:	4.5
LP Obj:	CLS-LP-008-B*10	Source:	BANK
Cog Level:	HIGH	Category 8:	Y

72. The H_2 Flow Controller, HWCH-FIC-5713, fails high on Unit Two while operating at 55% power.

Which one of the following identifies the impact this failure will have on plant radiation levels (assume HWC remains in service) and the reason for this impact?

The Main Steam Line Radiation Monitors will indicate __(1)__ due to the __(2)__.

A. (1) lower
(2) reduced production of Nitrates (NO_3)

B. (1) lower
(2) reduced production of Ammonia (NH_3)

C. (1) higher
(2) increased production of Nitrates (NO_3)

D. (1) higher
(2) increased production of Ammonia (NH_3)

Feedback

K/A: G2.03.14
Radiation Control
Knowledge of radiation or contamination hazards that may arise during normal, abnormal, or emergency conditions or activities.
(CFR: 41.12 / 43.4 / 45.10)

RO/SRO Rating: 3.4/3.8

Objective: CLS-LP-59*14
14. Explain why background radiation levels outside primary containment increase when the HWC System is placed in service.
15. State the parameter used for the reactor power level reference input to the hydrogen injection flow controller, and explain why it is used.

Reference:
SD-59, Revision 14, Page 8, Section 1.3.2

Cog Level: Low

Explanation:
The implementation of Hydrogen Water Chemistry (H2 injection) alters the Nitrogen-16 carryover ratio. The net production of Nitrogen-16 is not influenced by Hydrogen injection. The excess Hydrogen injected into the reactor coolant creates the driving force to shift the Nitrogen-16 distribution ratio, resulting in a larger fraction of the Nitrogen-16 forming volatile Ammonia and a smaller fraction forming Nitrites and Nitrates. This additional volatile Ammonia is then carried over in the reactor steam resulting in higher background radiation levels. Any increase in Hydrogen injection rates will result in a proportional increase in background radiation levels and vice-versa.

Distractor Analysis:
Choice A: Plausible because lower reactor power level would normally lower MSL rad monitor and at lower reactor power levels, production of Nitrates (NO_3) does reduce but does not impact MSL rad levels.

Choice B: Plausible because lower reactor power level would normally lower MSL rad monitor and at lower reactor power levels, production of Ammonia (NH_3) does reduce but the excess H_2 shifts to produce more.

Choice C: Plausible because MSL rad monitors will indicate higher and at lower reactor power levels, production of Ammonia (NH_3) does reduce but the excess H_2 shifts to produce more.

Choice D: Correct Answer

SRO Only Basis: N/A

Notes

HWC is removed or placed into service.

1.3.2 Radiological Implications Of Hydrogen Water Chemistry Control

The primary source of background radiation levels during reactor operation, near steam lines outside the Primary Containment, is attributed to the decay of Nitrogen-16 (N^{16}). N^{16} has a half-life of 7.1 seconds and decays with the emission of a high-energy gamma (6.1 Mev).

The major sources of Nitrogen in a BWR are from Oxygen-16 and from the leakage of nitrogen based chemical compounds from the RWCU and Condensate demineralizers. Oxygen-16 forms Nitrogen-16 via a neutron-proton reaction.

$(O^{16} + \eta \rightarrow N^{16} + \rho)$

When using normal water chemistry methods (i.e., without H_2 injection), a major portion of the Nitrogen-16 present in the reactor coolant combines with the free Oxygen to form water-soluble Nitrites (NO_2) and Nitrates (NO_3). These compounds are circulated through the reactor coolant systems and are ultimately removed by the RWCU System. A smaller fraction of the Nitrogen-16 is carried over in the steam in the form of Nitrogen gas (N_2) and Ammonia (NH_3) and is the predominate contributor to background radiation levels.

The implementation of Hydrogen Water Chemistry (H_2 injection) alters the Nitrogen-16 carryover ratio. The net production of Nitrogen-16 is not influenced by Hydrogen injection.

The excess Hydrogen injected into the reactor coolant creates the driving force to shift the Nitrogen-16 distribution ratio, resulting in a larger fraction of the Nitrogen-16 forming volatile Ammonia and a smaller fraction forming Nitrites and Nitrates. This additional volatile Ammonia is then carried over in the reactor steam resulting in higher background radiation levels. Any increase in Hydrogen injection rates will result in a proportional increase in background radiation levels and vise-versa.

High injection rates during normal operation have impacted BNP's accumulated radiation exposure to such an extent that shielding has been installed to minimize the "shine" from the Turbine Building 70' elevation to outlying buildings. Essentially, a roof has been built over each MSR using the outside Turbine Building wall and the wall between the High Pressure Turbine and the Main Generator for support. Structural steel between the Moisture Separator Reheaters (MSR) and the turbines serves as interior support to this roof, which covers the MSRs and the crossover piping. Carbon steel plates make up the roof and are removable, allowing access for maintenance. Additionally, a 4' masonry wall (originally temporary shielding) has been installed on the East and West walls outboard the MSRs where the elevation of the crossover piping exceeds the concrete shielding wall. The MSRs, Main Turbines and crossover piping account for up to 80% of the occupational radiation exposure due to Hydrogen Water Chemistry.

Categories

K/A:	G2.03.14	Tier / Group:	T3
RO Rating:	3.4	SRO Rating:	3.8
LP Obj:	CLS-LP-59*14	Source:	NEW
Cog Level:	LOW	Category 8:	Y

73.

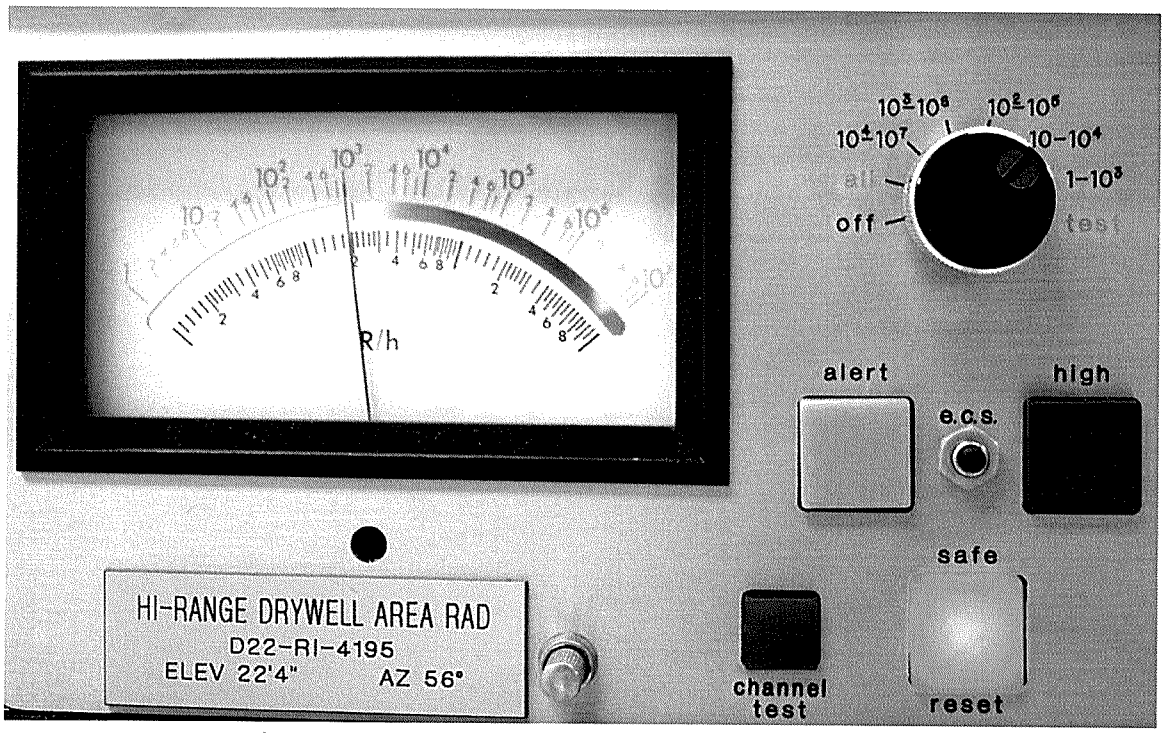

Which one of the following identifies the current Drywell radiation level?

A. ~20 R/h

B. ~200 R/h

C. ~1000 R/h

D. ~10000 R/h

Feedback

K/A: G2.03.15
Radiation Control
Knowledge of radiation monitoring systems, such as fixed radiation monitors, portable survey instruments, personnel monitoring equipment, etc.
(CFR: 41.12 / 43.4 / 45.9)

RO/SRO Rating: 2.9/3.1

Objective: CLS-LP-11.1*03a
3. Describe the function/operation of the following:
   a. Drywell High Range Radiation Monitors

Reference:
SD-11.1 Section 2.5

Cog Level: Low

Explanation:
Drywell high range area monitors provide indications of gross fuel failure and are used to determine emergency plan emergency action level associated with abnormal core conditions. With the function switch in the E1-E4, meter readings are taken from the lower scale between 10 - 10000 R/h. Current indication of 200 R/h

Distractor Analysis:
Choice A: Plausible if function switch is not taken into account would be 20 R/h.

Choice B: Correct answer

Choice C: Plausible if read directly off the upper scale

Choice D: Plausible if read off the upper scale and adjusted by a factor of 10 for function switch position.

SRO Only Basis: N/A

Notes

FIGURE 11.1- 5

DRYWELL HIGH RANGE RADIATION MONITOR CONTROL/TRIP UNIT

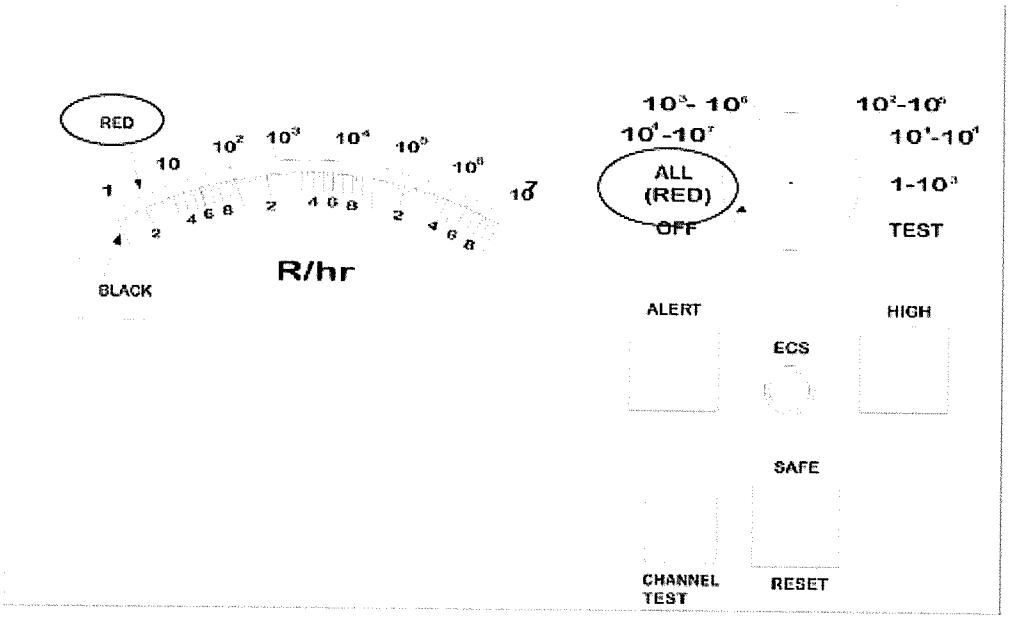

Categories

K/A:	G2.03.15	Tier / Group:	T3
RO Rating:	2.9	SRO Rating:	3.1
LP Obj:	CLS-LP-59*14	Source:	NEW
Cog Level:	LOW	Category 8:	

74. Which one of the following Reactor Building radiation annunciators requires entry into RRCP, Radioactivity Release Control Procedure?

A. *AREA RAD RX BLDG HIGH*

B. *RX BLDG ROOF VENT RAD HIGH*

C. *PROCESS RX BLDG VENT RAD HIGH*

D. *PROCESS RX BLDG VENT RAD HI-HI*

Feedback

K/A: G2.04.01
Emergency Procedures / Plan
Knowledge of EOP entry conditions and immediate action steps.
(CFR: 41.10 / 43.5 / 45.13)

RO/SRO Rating: 4.6/4.8

Objective: LOI-CLS-LP-300-N*002
2. Given plant conditions, determine if 0EOP-04-RRCP should be entered.

Reference:
RRCP

Cog Level: Low

Explanation: *Brunswick does not have any immediate operator actions in any EOP.*
Annunciator requires immediate operator action of entry into RRCP. RRCP provides guidance to the operator for minimizing off-site radioactivity releases up to and including events involving substantial degradation of all of the fission product barriers (e.g., fuel, fuel clad, reactor vessel pressure boundary, primary containment, and secondary containment).
RRCP and SCCP are used concurrently to control releases from primary systems. This procedure controls non-primary system releases through actions incorporated in the non-PSTG legs of the procedure.

Distractor Analysis:
Choice A: Plausible because SCCP entry would be appropriate.

Choice B: Correct Answer

Choice C: Plausible because is easily confused with the roof vent alarm and is a SCCP entry condition.

Choice D: Plausible because this annunciator provides indication of Secondary Containment auto isolation setpoint and is easily confused with the roof vent alarm.

SRO Only Basis: N/A

Notes

RADIOACTIVITY RELEASE CONTROL

RR-1

ENTRY CONDITIONS:

* MAIN STEAM LINE RAD HI ANNUN SETPOINT EXCEEDED (UA-23,2-6)
* PROCESS OFF-GAS RAD HI ANNUN SETPOINT EXCEEDED (UA-03,5-2) (SJAE)
* RX BLDG ROOF VENT RAD HIGH ANNUN SETPOINT EXCEEDED (UA-03,2-3)
* TURB BLDG VENT RAD HIGH ANNUN SETPOINT EXCEEDED (UA-03,3-3)
* PROCESS OG VENT PIPE RAD HI ANNUN SETPOINT EXCEEDED (UA-03,6-4) (STACK)
* SERVICE WTR EFFLUENT RAD HIGH ANNUN SETPOINT EXCEEDED (UA-03,5-5)
* ANY UNMONITORED OFF-SITE RADIOACTIVITY RELEASE
* CALCULATED DOSE RATE LIMIT OF "NOBLE GAS INSTANTANEOUS RELEASE RATE DETERMINATION" (E&RC-2020) EXCEEDED

RR-2

SECONDARY CONTAINMENT CONTROL PROCEDURE

SCCP-1

ENTRY CONDITIONS

* AREA TEMP ABOVE THE MAX NORM OPERATING VALUE TABLE 1

* ARE DIFFERENTIAL TEMP ABOVE THE MAX NORM OPERATING VALUE TABLE 2

* SECONDARY CTMT INTEGRITY IS REQUIRED AND REACTOR BLDG PRESS CANNOT BE MAINTAINED NEGATIVE

* REACTOR BLDG VENTILATION EXHAUST RADIATION LEVEL EXCEEDS 3 mR/HR

* AREA RADIATION LEVEL ABOVE THE MAX NORM OPERATING VALUE TABLE 3

* HPCI, RHR, OR CORE SPRAY ROOM WATER LEVEL EXCEEDS 6 INCHES ABOVE FLOOR TABLE 4

SCCP-2

RX BLDG ROOF VENT RAD HIGH

AUTO ACTIONS

NONE

CAUSE

1. High noble gas concentration in the Reactor Building vent exhaust.
2. Circuit malfunction.

OBSERVATIONS

1. The Reactor Building Roof Vent Radiation Monitor, CAC-AQH-1264-3, on Panel XU-55, is in alarm.
2. The 1264 chart recorder is trending upward.

ACTIONS

1. Enter EOP-04-RRCP, Radioactivity Release Control, and execute concurrently with this procedure.
2. If steam leaks in the Reactor Building are causing local area radiation levels or ambient temperatures to increase, enter EOP-03-SCCP, Secondary Containment Control, as appropriate.
3. Refer to AOP-05.0, Radioactive Spills, High Radiation, and Airborne Activity.
4. If a circuit malfunction is suspected, ensure that a Trouble Tag is prepared.

DEVICE/SETPOINTS

Rad Monitor CAC-AQH-1264-3	Variable (contact E&RC for current setpoint)

POSSIBLE PLANT EFFECTS

1. Possible release to environs.
2. This annunciator is required to be operable to support reactor building ventilation radiation monitor operability; annunciator inoperability will result in a Required Compensatory Measure.

REFERENCES

1. LL-9353-31
2. EOP-04-RRCP, Radioactivity Release Control
3. AOP-05.0, Radioactive Spills, High Radiation, and Airborne Activity
4. EOP-03-SCCP, Secondary Containment Control
5. PM 92-017, Reactor Building Roof Vent Monitor
6. ODCM 7.3.2 and 7.3.7

AREA RAD RX BLDG HIGH

AUTO ACTIONS

NONE

CAUSE

1. High radiation level in one or more of the following areas:
   a. Core Spray Pump Room 2A (channel 15).
   b. Core Spray Pump Room 2B (channel 16).
   c. RHR Heat Exchanger and Pump Room 2A (channel 17).
   d. RHR Heat Exchanger and Pump Room 2B (channel 18).
   e. Reactor Building air lock (channel 19).
   f. Drywell entrance (channel 20).
   g. Decontamination room (channel 22).
   h. Equipment entry (channel 23).
   i. Reactor Building sample station (channel 24).
   j. Reactor Building air lock (E1 50') (channel 25).
   k. Spent fuel pool cooling system (channel 30).
2. Transfer of either units RWCU backwash receiving tank to Radwaste (Channel 25)
3. Circuit malfunction.

OBSERVATIONS

1. Affected ARM indicator and trip until Upscale light illuminated on Panel H12-P600.

ACTIONS

1. Refer to EOP-03-SCCP, Table 3; enter EOP-03-SCCP as appropriate.
2. Refer to AOP-05.0, Radioactive Spills, High Radiation, and Airborne Activity.
3. If a circuit malfunction is suspected, ensure that a Trouble Tag is prepared.

DEVICE/SETPOINTS

Channel 15 K2 Relay	20 mR/hr
Channel 16 K2 Relay	20 mR/hr
Channel 17 K2 Relay	20 mR/hr
Channel 18 K2 Relay	20 mR/hr
Channel 19 K2 Relay	20 mR/hr
Channel 20 K2 Relay	20 mR/hr
Channel 22 K2 Relay	20 mR/hr
Channel 23 K2 Relay	20 mR/hr
Channel 24 K2 Relay	20 mR/hr
Channel 25 K2 Relay	20 mR/hr
Channel 30 K2 Relay	50 mR/hr

PROCESS RX BLDG VENT RAD HI-HI

AUTO ACTIONS

1. Reactor Building ventilation system trips and isolates.
2. Standby gas treatment trains start.
3. If open, the inboard and outboard primary containment purge and vent valves close.
4. PASS sample valves to torus close.

CAUSE

1. High airborne activity levels in the Reactor Building exhaust plenum.
2. Circuit malfunction.

OBSERVATIONS

1. Reactor Building exhaust plenum rad monitor indicates greater than 4 mR/hr on Panel H12-P606.
2. PROCESS RX BLDG VENT RAD HIGH (UA-03 4-5) alarm.

ACTIONS

1. Verify auto actions.
2. Refer to AOP-05.0, Radioactive Spills, High Radiation, and Airborne Activity.
3. Enter EOP-03-SCCP, Secondary Containment Control.
4. Refer to EOP-04-RRCP, Radiological Release Control; enter as appropriate.
5. If a circuit malfunction is suspected, ensure that a Trouble Tag is prepared.

DEVICE/SETPOINTS

Rad Monitor D12-RM-K609A/B	4 mR/hr

POSSIBLE PLANT EFFECTS

1. Possible release to environs in excess of ODCM 7.3.7.
2. This annunciator is required to be operable to support Rx Bldg Vent Rad Monitor operability; annunciator inoperability will result in a LCO.

REFERENCES

1. LL-9353 - 35
2. AOP-05.0, Radioactive Spills, High Radiation, and Airborne Activity
3. EOP-03-SCCP
4. EOP-04-RRCP
5. Technical Specifications 3.3.6.1, Table 3.3.6.1-1 Function 2d and 3.3.6.2, Table 3.3.6.2-1 Function 3
6. ODCM 7.3.7

PROCESS RX BLDG VENT RAD HIGH

AUTO ACTIONS

NONE

CAUSE

1. High airborne activity in Reactor Building ventilation exhaust plenum.
2. Circuit malfunction.

OBSERVATIONS

1. Reactor Building Vent Rad Recorder D12-RR-R605 Channel A or B indicates high radiation level.
2. Reactor Building Exhaust Plenum Rad Monitor Channel A or B indicates greater than 3 mR/hr on Panel H12-P606.

ACTIONS

1. Enter EOP-03-SCCP, Secondary Containment Control.
2. Refer to AOP-05.0, Radioactive Spills, High Radiation, and Airborne Activity.
3. If a circuit malfunction is suspected, ensure that a Trouble Tag is prepared.

DEVICE/SETPOINTS

D12-RR-R605 red or black pen	3 mR/hr

POSSIBLE PLANT EFFECTS

1. Possible release to environs.
2. If airborne activity increases to 4 mR/hr, Reactor Building HVAC isolation, a Group 6 isolation, drywell purge isolation, and initiation of the Standby Gas Treatment System will occur.

REFERENCES

1. LL-9353 - 35
2. AOP-05.0
3. EOP-03-SCCP
4. Plant Modification 85-081

Categories

K/A:	G2.04.01	Tier / Group:	T3
RO Rating:	4.6	SRO Rating:	4.8
LP Obj:	LOI-CLS-LP-300-N*002	Source:	BANK
Cog Level:	LOW	Category 8:	Y

75. An ATWS has occurred on Unit One with the following plant conditions:

Reactor Water Level	130 inches (stable)
Injection Systems	CRD
Reactor Power	APRM downscale lights are illuminated
Control Rods	19 rods failed to insert
SRVs	All closed
Suppression Pool Temp.	92° F

Which one of the following choices correctly completes the statement below IAW LPC?

Reactor Recirculation pumps __(1)__ required to be tripped and the SLC Pumps __(2)__ required to be started.

A. (1) are not
   (2) are not

B. (1) are not
   (2) are

C. (1) are
   (2) are not

D. (1) are
   (2) are

Feedback

K/A: G2.04.09
Emergency Procedures / Plan
Knowledge of low power/shutdown implications in accident (e.g., loss of coolant accident or loss of residual heat removal) mitigation strategies.
(CFR: 41.10 / 43.5 / 45.13)
e.g. is an abbreviation for the latin phrase exempli gratia. When you mean "that is" use i.e. Since e.g. indicates a partial list, it would be redundant to add etc. at the end of a list introduced by this abbreviation. (from answerbag.com) The recirc pumps and SLC pumps are used for mitigation of the ATWS.

RO/SRO Rating: 3.8/4.2

Objective: CLS-LP-300-E*017
17. Compare and contrast the operator actions for emergency depressurization with an ATWS condition present versus those with all control rods inserted.

Reference:
1(2)OP-, Revision , Page , Section

Cog Level: High

Explanation:
Reactor recirc pumps are evaluated during the ATWS and are tripped to reduce core flow thereby reducing reactor power. If power is less than 2% then tripping the pumps is not required. SLC is injected into the reactor to provide an alternate means of shutting down the reactor. It is required to be injected prior to exceeding 110° F in the torus. With SRVs closed and temperature at 92 with no additional heat load to the torus SLC injection is not required.

Distractor Analysis:
Choice A: Correct answer, see explanation.

Choice B: Plausible because recirc pumps are not required to be shutdown is correct and if the torus was in jepordy of reaching 110 then this would be corect.

Choice C: Plausible because if power was greater than 2% the recirc pumps are required to be shutdown is correct and the torus is not in jepordy of reaching 110 so this is corect.

Choice D: Plausible because if power was above 2% and the torus temperature in danger of reaching 110 then these actions would be correct.

SRO Only Basis: N/A

Notes

From 0OI-37.5:

STEPS RC/Q-06 and RC/Q-07

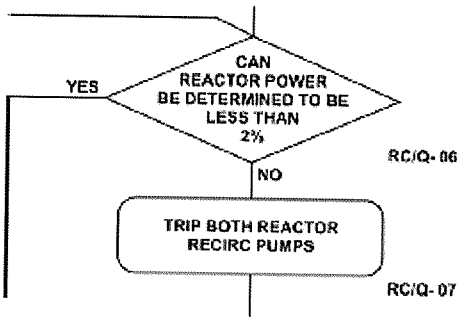

STEP BASES:

If reactor power is less than 2%, the operator is routed around the step which directs tripping both recirculation pumps.

Tripping the recirculation pumps from high reactor power effects a prompt reduction in power. If boron injection is later required, three-dimensional model tests have demonstrated that forced recirculation need not be maintained because natural circulation flow provides adequate boron mixing. Tripping the recirculation pumps is allowed in this step because the operator will have already run the speeds back, if necessary, and the resulting changes will be significantly reduced.

If reactor power is below the APRM downscale trip setpoint, tripping the recirculation pumps results in little, if any, reduction in reactor power since power is already near the decay heat level. In this case, forced recirculation flow is permitted to continue for the purpose of maximizing boron mixing should boron injection later be required.

STEPS RC/Q-08 through RC/Q-10

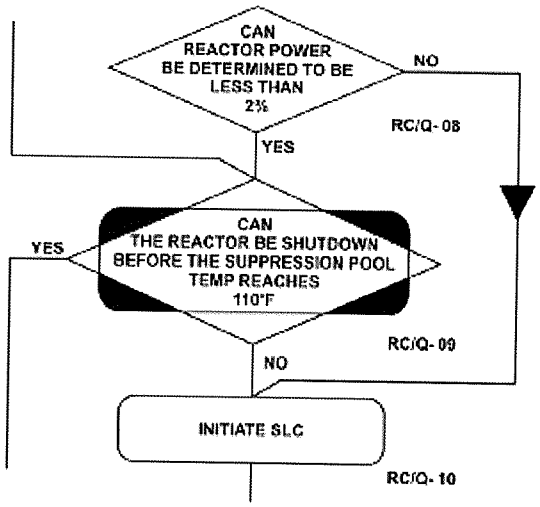

STEP BASES:

If reactor power is above 2%, the operator is directed to inject boron. This is a conservative action because with power above 2%, Suppression Pool temperature will steadily increase towards 110°F. This also allows sufficient time for the Hot Shutdown Boron Weight of boron to be injected. The extra time may be needed since the alternate systems used for boron injection require significantly more time to inject boron should the SLC System fail. The SLC system is initiated to shut down the reactor.

The Boron Injection Initiation Temperature is defined to be the greater of:

a. The Suppression Pool temperature at which initiation of a reactor scram is required by Technical Specifications, or

b. The highest Suppression Pool temperature at which initiation of boron injection using SLC will result in injection of the Hot Shutdown Boron Weight of boron before Suppression Pool temperature exceeds the Heat Capacity Temperature Limit.

Categories

K/A:	G2.04.09	Tier / Group:	T3
RO Rating:	3.8	SRO Rating:	4.2
LP Obj:	CLS-LP-300-E*017	Source:	BANK
Cog Level:	HIGH	Category 8:	