FirstEnergy Nuclear Operating Company

FENOC

Davis-Besse Nuclear Power Station

Nuclear Regulatory Commission
Public Meeting

June 3, 2010

Agenda

Opening Comments & Desired Outcomes……..Barry Allen
Site Vice President

Cycle 16 Performance & 16th Refueling Outage Work Scope……Clark Price
Director, Site Performance Improvement

16th Refueling Outage Inspections……..Vito Kaminskas
Director, Site Engineering

Results of the Root Cause Investigation……...Scott Plymale
Manager, Plant Engineering

CRDM Nozzle Penetration Restoration…….....Ken Byrd
Basis for Return of the Reactor Vessel Head to Service **Manager, Design Engineering**
Basis of Operation for Cycle 17

Remaining Activities Required for Restart……...Brian Boles
Director, Site Operations

Closing Comments……Barry Allen

Desired Outcomes

- Demonstrate Davis-Besse's commitment to Safe and Reliable Operations
- Recap Cycle 16 and 16 RFO Performance
- Present the inspection results and discovery of the degraded Reactor Vessel Control Rod Drive Mechanism (CRDM) Nozzle Penetrations
- Present the results of our Root Cause Investigation
- Describe Nozzle Modifications completed to fully restore Reactor Vessel Head Integrity
- Present our basis for the return of the Reactor Vessel Head to service
- Demonstrate FENOC's overriding priority and commitment to ensure the safe and reliable operation of Davis-Besse

Cycle 16 Performance and the 16th Refueling Outage Work Scope

Clark Price – Director, Site Performance Improvement

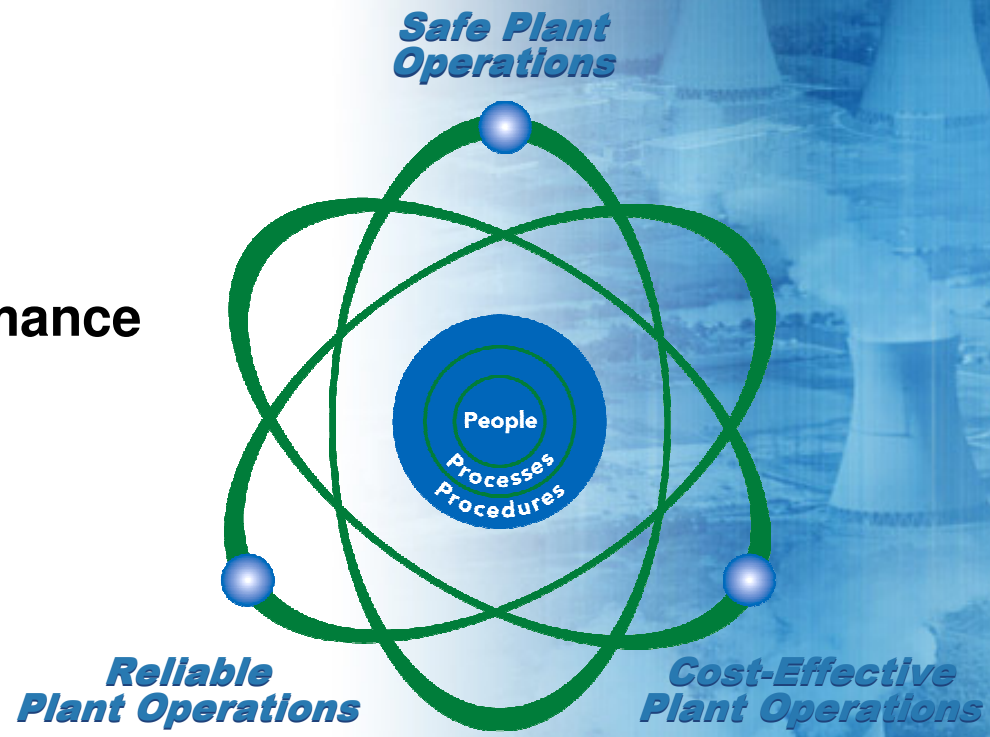

People with a strong safety focus delivering top fleet operating performance.

Plant Performance

- **The Station operated safely and reliably for Cycle 16**
  - Implemented Improved Standard Technical Specifications
  - Conducted a successful NRC/FEMA Evaluated Exercise
  - Implemented improved Emergency Action Levels
  - Worked over 10.7 million personhours without a lost time accident
  - Pressurizer Valve Code Safety Outage to improve station reliability
  - Industry Top Quartile On-line Operation Dose Exposure
  - Industry Top Decile Chemistry Effectiveness Index
  - Capability Factor - 92.72%
  - Forced Loss Rate - 0.65%

16RFO Major Accomplishments

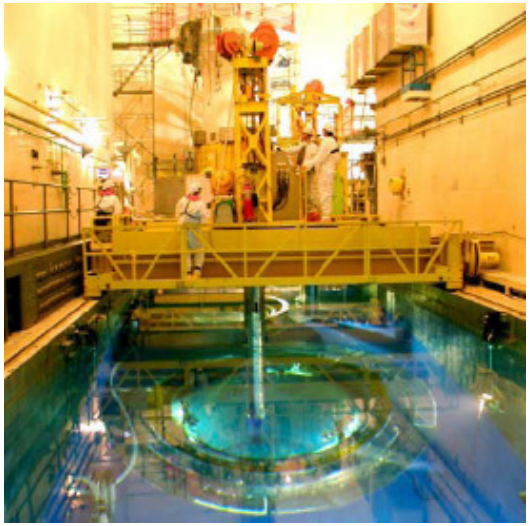

Fuel Handling Bridge

Successfully Completed:

- **All planned Alloy 600 mitigation activities**
  - Weld overlays on all 4 Reactor Coolant Pump (RCP) suction and discharge lines
  - Weld overlays on both Core Flood Line Nozzles
  - Weld Overlays on remaining Cold Leg Drains
- **Fuel Inspections**
- **Steam Generator Inspections**
- **Emergency Core Cooling Pump Motor Replacements**
- **Aux Feed Water Auto Suction swap to Service Water**
- **In-Service Inspections**

Optimized weld overlay design utilized on the four 28-inch RCP cold leg discharge nozzle welds

16RFO Major Accomplishments

Successfully completed maintenance and modifications to improve performance:

- **Emergency Diesel Generator Modification**
- **Underground Cable Replacements**
- **Pressurizer Code Safety Valve Replacements**
- **Replacement of Plant Process Computer Multiplexers**
- **High Pressure Turbine Rotor Inspections**
- **Main Feed Pump Turbine Blade Replacement**
- **Main Condenser Inspections and Maintenance**

Lifting of the High Pressure Turbine Rotor for Inspections

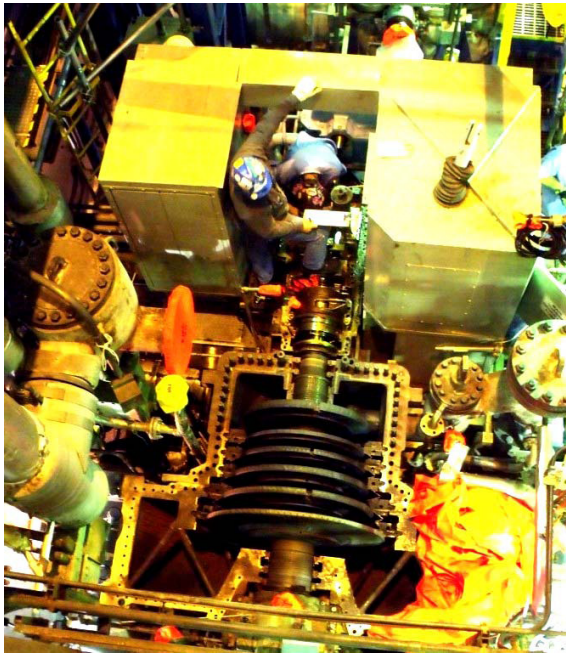

Workers disassemble a Main Feed Pump Turbine

16RFO Major Accomplishments

- **Davis-Besse is expected to start up with:**
  - No Open Prompt Operability Determinations
  - No Open Operational Decision Making Issues
  - No Open Operator Work Arounds
  - No Open Outage Corrective Maintenance Orders

Control Room

16th Refueling Outage Inspections

Vito Kaminskas – Director,

Site Engineering

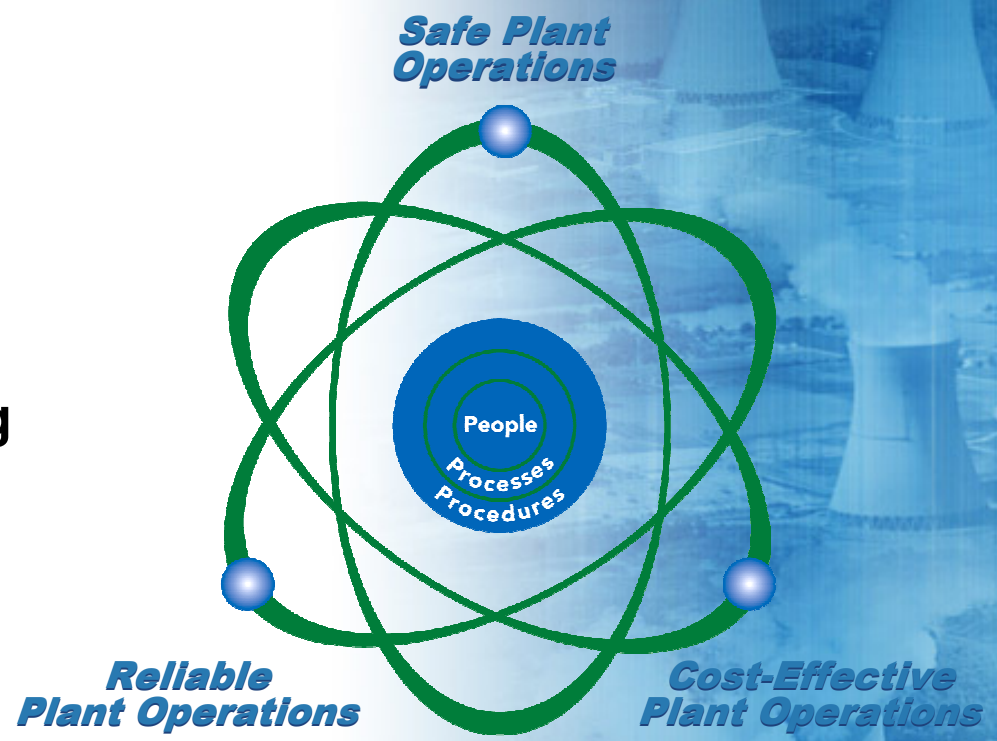

People with a strong safety focus delivering top fleet operating performance.

In-Service Inspection Scope

- **Over 280 Manual Examinations**
- **Steam Generators**
- **#1 Steam Generator Auxiliary Feedwater Header**
- **Pre-Mitigation & Pre-Service Inspections for Alloy 600 Weld Overlays**
- **Reactor Vessel Upper Core Barrel Bolts**
- **Reactor Vessel Bottom Penetrations**
- **Reactor Vessel Closure Head**

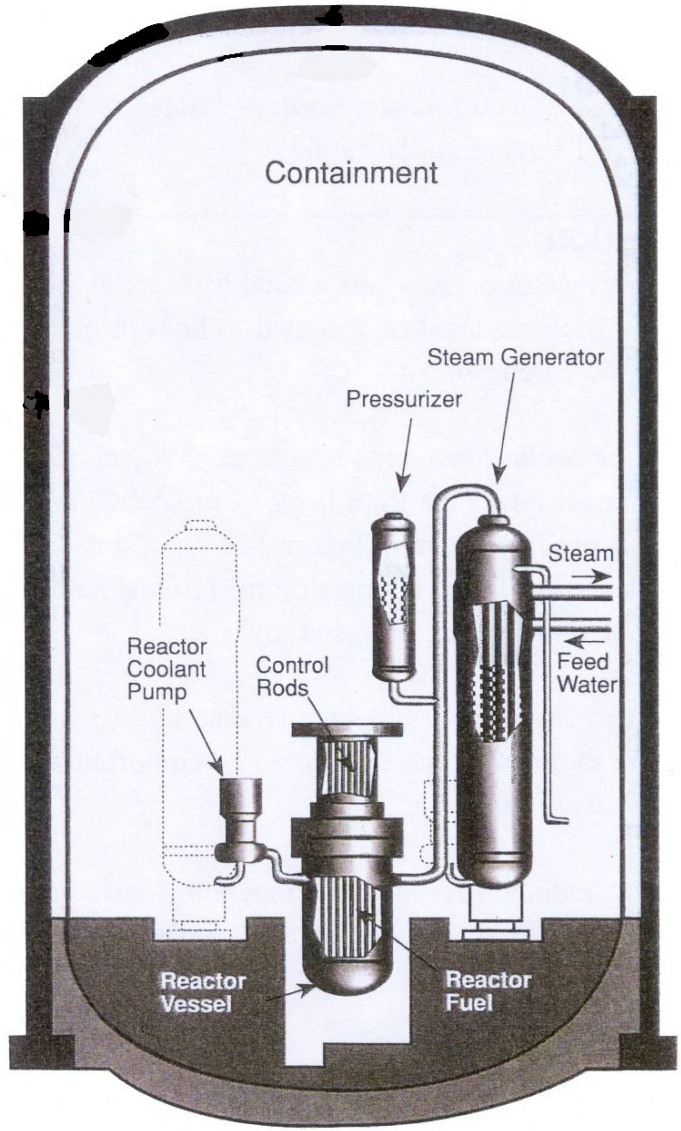

Containment Building

Reactor Vessel Closure Head

- **Installed unused head of similar design from the cancelled Midland plant in 2003**
  - Nozzles constructed of Alloy 600
  - Pre-service inspection performed
  - Interim replacement until new reactor vessel head to be installed in 2014

- **Bare metal visual inspections performed:**
  - 2003
  - 2005
  - 2006
  - 2008
  - No boron leakage

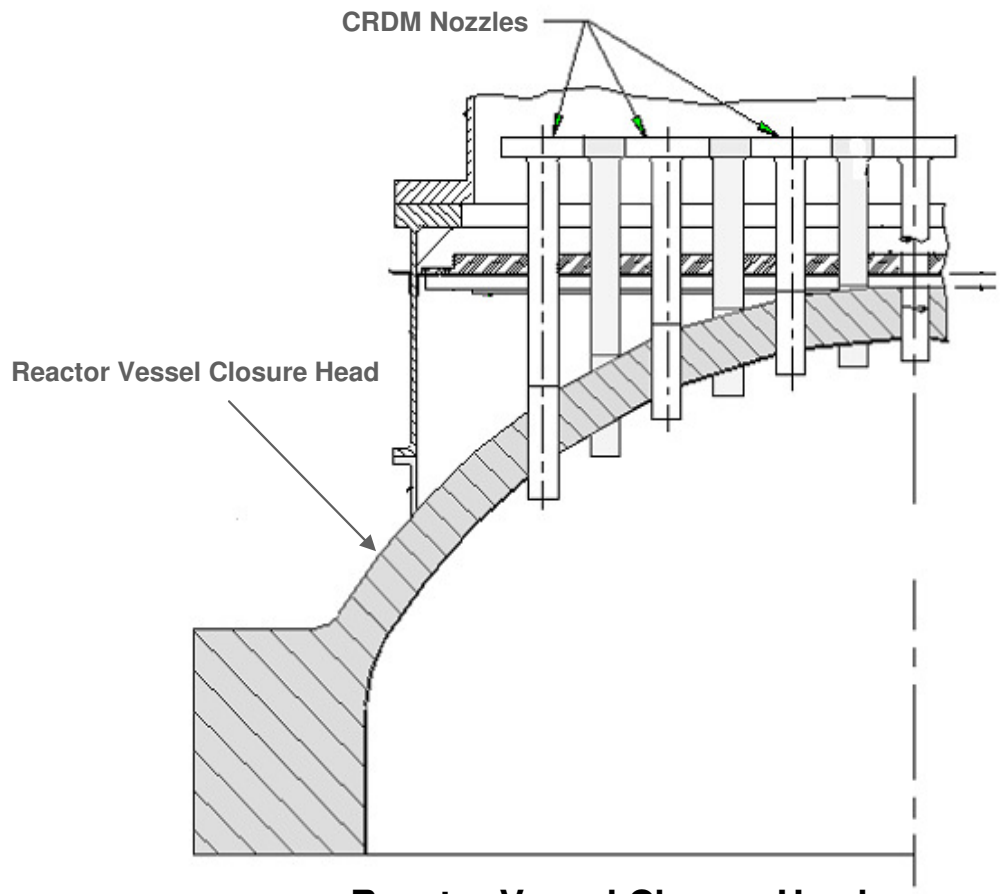

Reactor Vessel Closure Head

Reactor Vessel Head Inspections

- **Planned 16RFO Scope**
  - Axial and Circumferential Ultrasonic Inspections of all 69 Control Rod Drive Mechanism Penetration Nozzles
  - Bare Metal Visual Inspection of the Reactor Vessel (RV) Head
- **Supplemental 16RFO Scope**
  - Additional Inspections of RV Head
    - Performed inspection of J-Groove welds by either Liquid Dye Penetrant Testing (PT) or Eddy Current Testing (ET)

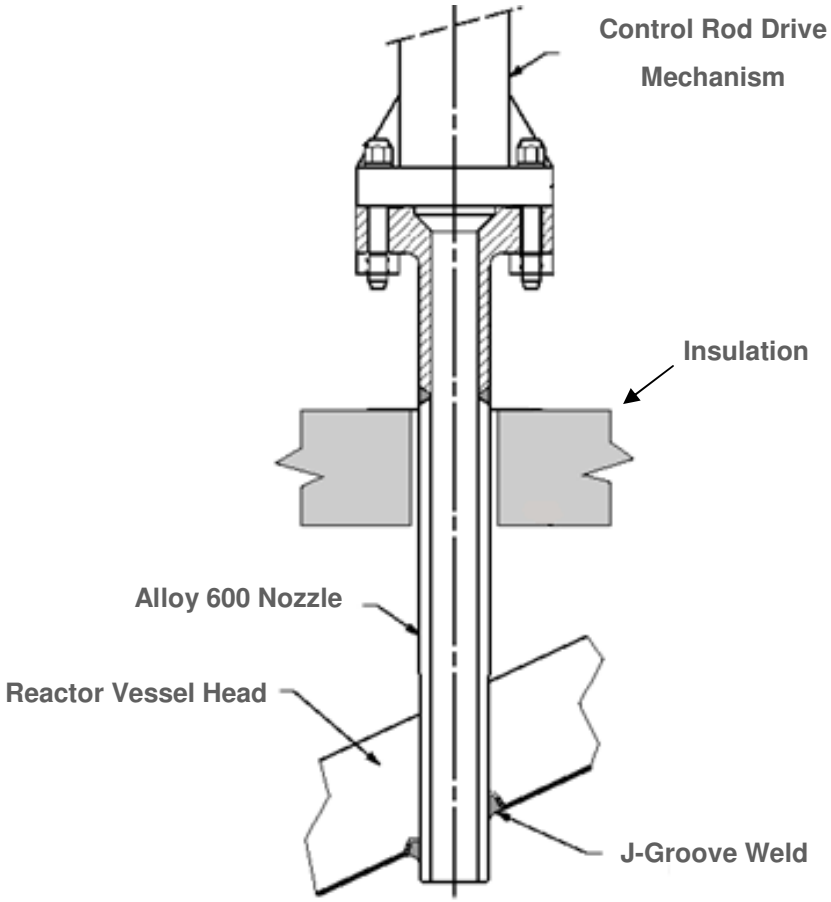

Control Rod Drive Mechanism Nozzle

Reactor Vessel Head CRDM Nozzle Penetration Inspections

- **Inspection Results and Reporting**
  - March 12 - Identified first indications in Control Rod Drive Mechanism Penetration Nozzles during Axial Ultrasonic Testing (UT) scans
    - Initiated 8 hour report to the NRC
  - March 13 - Began Bare Metal Visual examinations and discovered visible boron deposits on the Reactor Vessel Head
    - Updated 8 hour report to the NRC

Reactor Vessel Head CRDM Nozzle Penetration Inspections

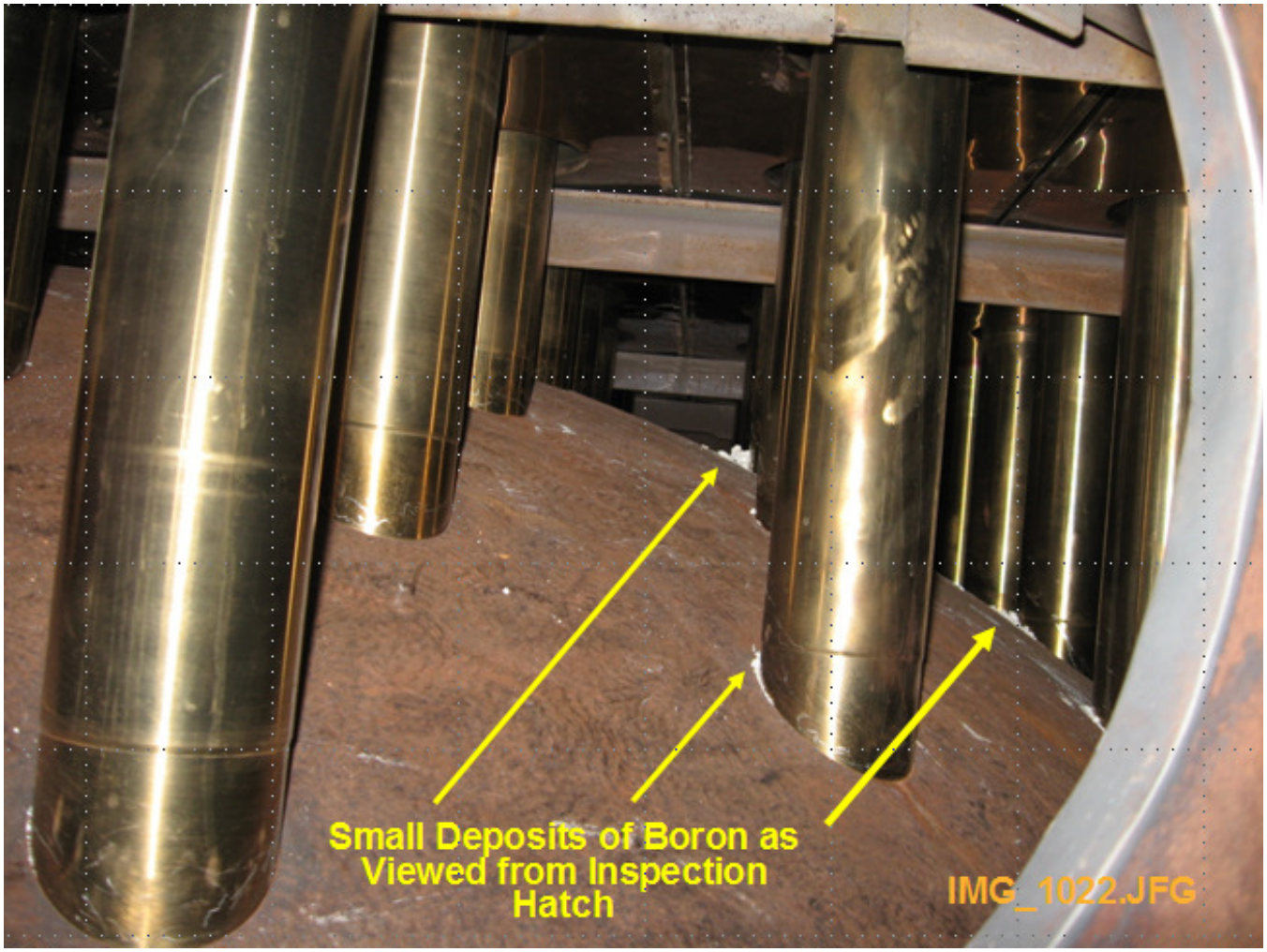

Reactor Vessel Head CRDM Nozzle Penetration Inspections

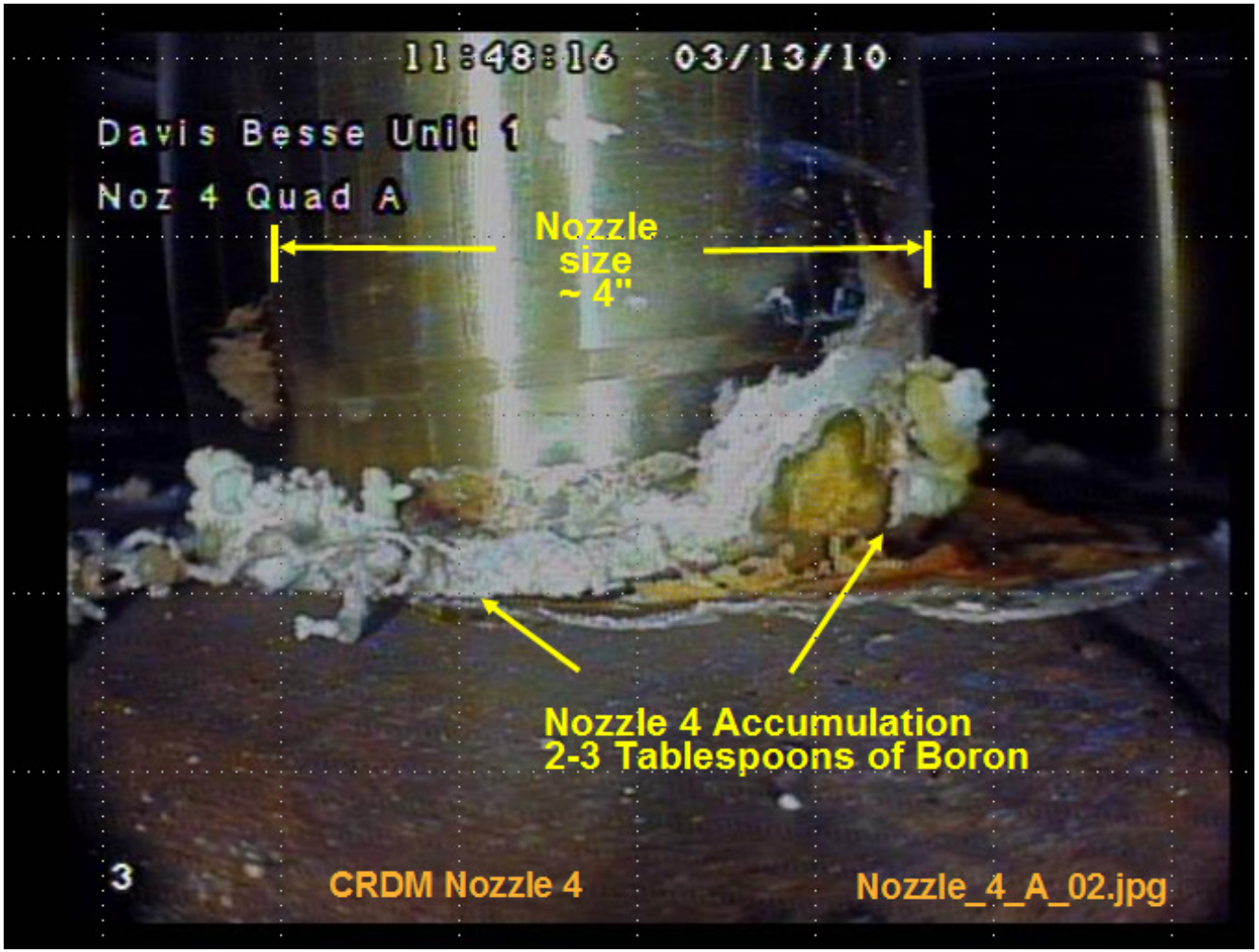

Reactor Vessel Head Inspection Results

- **Reactor Vessel Head has 69 Control Rod Drive Mechanism Penetration Nozzles**
  - 24 Nozzles Identified for Modification
    - 12 from Ultrasonic Testing (UT) of Nozzles
    - 4 from Liquid Dye Penetrant Testing (PT) of J-Groove Welds
    - 8 from Eddy Current Testing (ET) of J-Groove Welds
  - Remaining 45 Nozzles and J-Groove Welds are ASME Code acceptable through a combination of either Visual Examination (VT), UT, PT, or ET Examinations
  - Required inspections identified boron residue on the reactor head and flaws within several CRDM nozzles
  - Flaws were found before they resulted in an operational challenge
  - Structural integrity of the RPV head was not compromised

Results of
Root Cause Investigation

Scott Plymale - Manager,
Plant Engineering

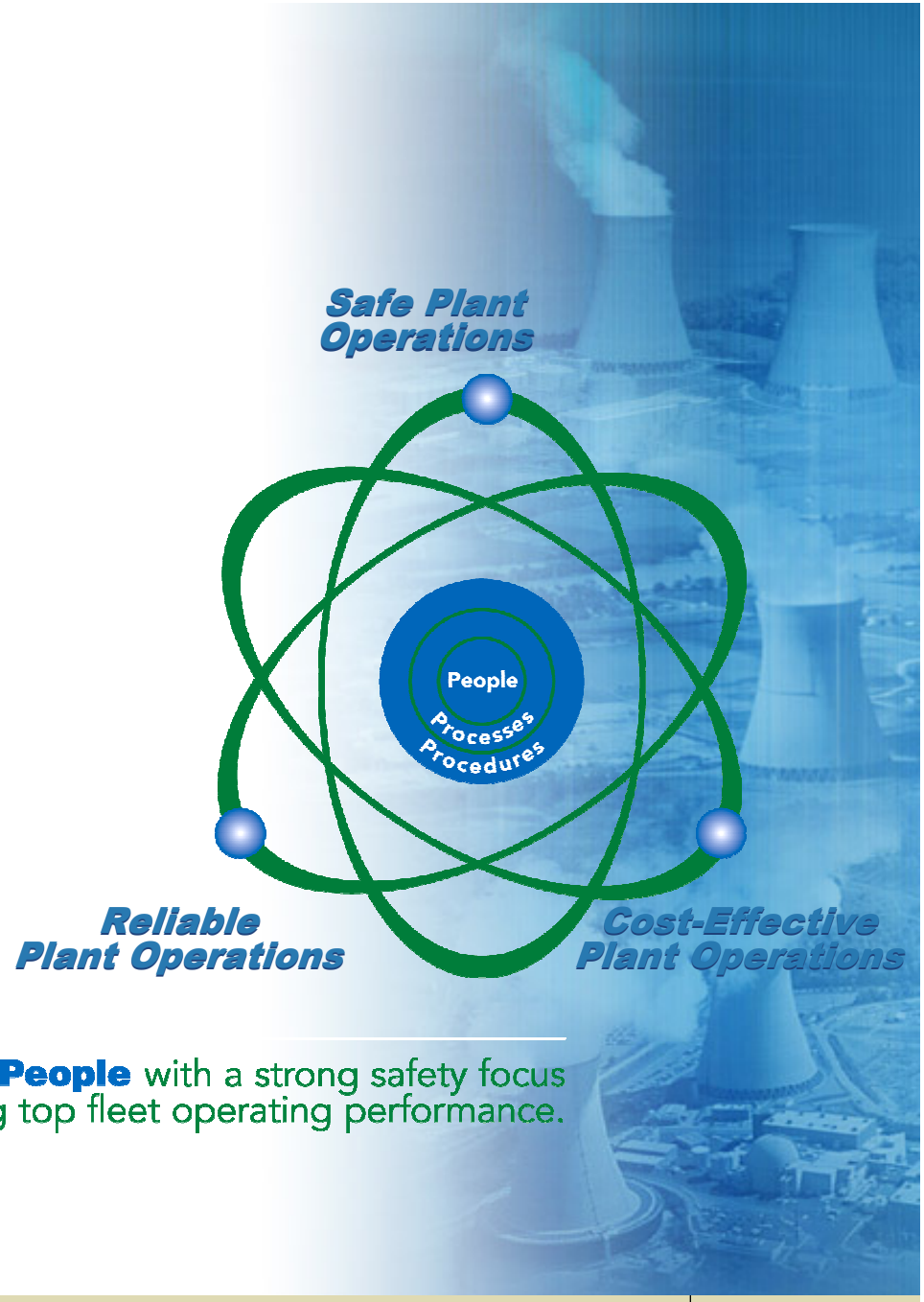

Root Cause Team

- **Summary of Problem Statement**
  - 16RFO Non-Destructive examinations of the Reactor Vessel (RV) Head found twenty-four Control Rod Drive Mechanism nozzles and J-groove welds with flaws including one with active leakage onto the reactor pressure vessel head. The RV head had been in service three operating cycles.

- **Utilized experts from:**
  - FENOC
  - EPRI
  - EPRI Materials Reliability Program Personnel
  - Westinghouse
  - AREVA
  - Structural Integrity Associates
  - Dominion Engineering
  - Nuclear Industry peers

Evaluating the Condition

- **Reviewed Reactor Vessel (RV) head pre-service inspection results**
- **Reviewed RV head manufacturing records**
- **Reviewed chemistry operating parameters for previous cycles**
- **EPRI Independent Review of Ultrasonic Testing Results**
- **Independent 3rd Party review of Bare Metal Visual Inspections conducted since 2003**

Evaluating the Condition

- **Laboratory Boron Analysis**
- **Head Vent Line Temperature Indication Calibrations**
- **Head Temperature Model Analysis**
- **Residual Weld Stress Calculations**
- **Crack Growth Rate Modeling**

Evaluating the Condition

- **Samples taken of welds and nozzle metal for laboratory analysis**
  - Indications cut out of Nozzles 4 and 10 for analysis
  - Nozzle 4 and 10 ends removed for laboratory analysis

Boat and Ring Samples

Evaluating the Condition

- **Laboratory Analysis work performed**
  - Indication Characterization
  - Scanning Electron Microscope Surface Examinations
  - Dye Penetrant Testing
  - Micro-focus X-Ray inspections
  - Material Property Testing
    - Micro Hardness Measurements
    - Tensile Strength
    - Precision Analytical Chemistry Analysis
  - Microstructure Analysis
    - Carbide Distribution
    - Metal Grain Size
  - Other Analysis
    - Contamination in weld or nozzle material
    - Weld Defects
    - Micro-focus X-Ray inspections

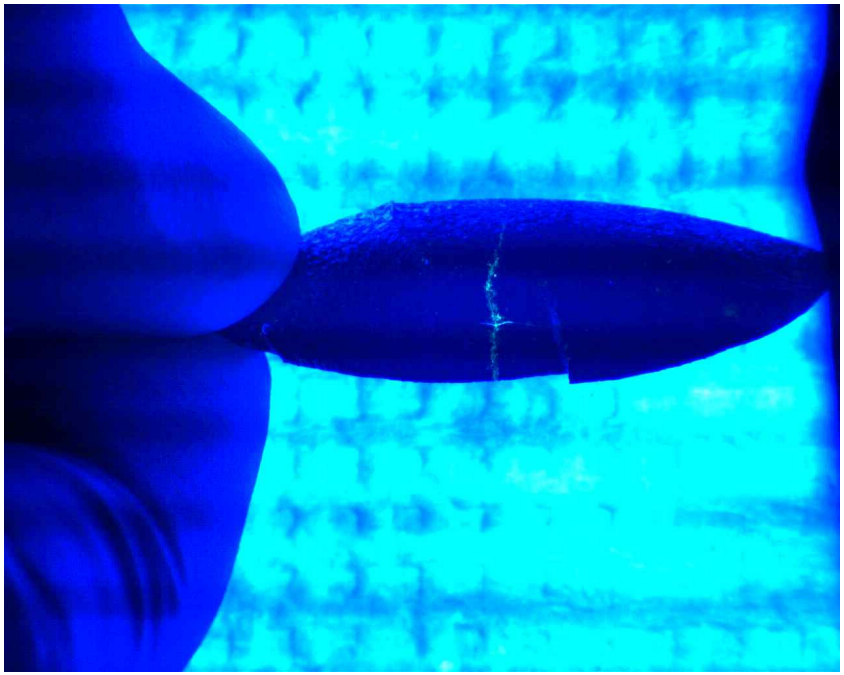

Nozzle 4 Boat Sample examined by Fluorescent PT

Root Cause Results

- **What was the cause of the Davis-Besse Reactor Vessel Head Control Rod Drive Mechanism Nozzle Penetration indications after 3 operating cycles?**
  - Direct Cause – Primary Water Stress Corrosion Cracking (PWSCC)

- **3 Conditions needed for Primary Water Stress Corrosion Cracking:**
  - Susceptible Material
  - Environment
  - Tensile Stress

Root Cause Results

- **Physical Conditions which may Contribute to PWSCC**
  - **PWSCC Potential Contributors Assessed:**
    - Reactor Vessel (RV) Head and Tubing Manufacturing Methods Can Introduce Residual Stresses
    - Weld Size
    - Alloy 600 is a PWSCC Susceptible Material
  - **Analysis Results of PWSCC Contributors:**
    - Tube and head manufacturing methods were not unique to the existing Davis-Besse RV Head
    - Welding, repair and inspection methods similar to other heads
    - Weld sizes are within industry weld size distribution
    - Similar material to other RV Heads

Root Cause Results

- **Conclusion from Data**
  - Laboratory data and assembly records suggest that the Davis-Besse Reactor Vessel (RV) Head is made of similar materials and assembled with similar manufacturing methods as other industry RV heads manufactured in the 1970's
  - Unique cracking characteristics were not identified for the Davis-Besse RV Head Control Rod Drive Mechanism Nozzle Penetrations

Root Cause Results

- **Reactor Vessel Head Crack Growth Analysis**
  - EPRI Material Reliability Program (MRP) Developed Inspection Process
    - Probabilistic Fracture Mechanics Analysis for Reactor Vessel (RV) Head Nozzle Cracking
    - Utilizes years of industry Alloy 600 crack and leakage data
    - Forms the basis for ASME Code Case N-729-1 which is required to be used by 10CFR50.55(a), “Codes and Standards”
  - Inspection interval and inspection technique set to maintain a low probability for Control Rod Ejection due to cracking or loss of structural integrity due to wastage

Root Cause Results

- **Analysis of Crack Initiation and Growth (cont.)**
  - Reactor Vessel (RV) Head Temperature is a key input into analysis
    - BWOG analysis utilized Reactor Coolant System T_{hot} as RV Head Temperature
    - Davis-Besse RV Head temperature is warmer than T_{hot}
    - Small Continuous Vent Line flow has no significant impact on temperature

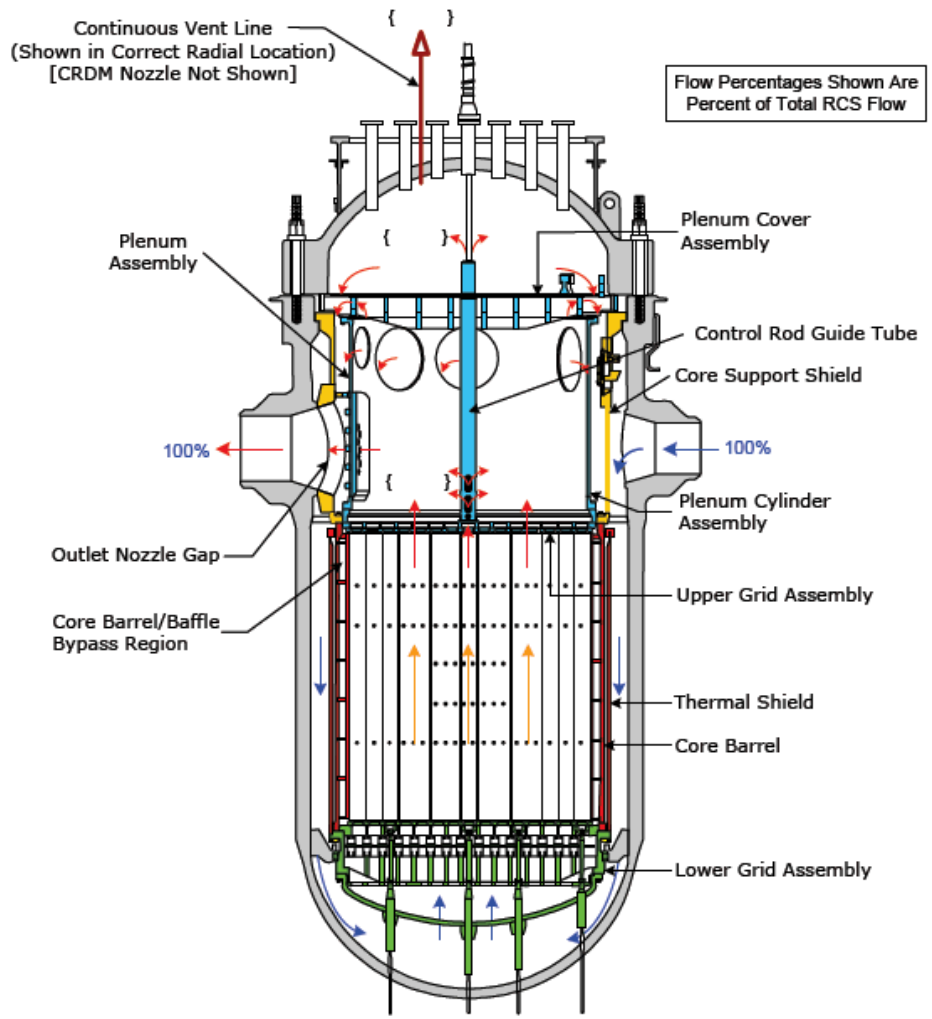

Reactor Vessel

Root Cause Results

- **Analysis of Crack Initiation and Growth (cont.)**
  - 16RFO Inspection findings were compared to the Material Reliability Program's probabilistic crack analysis
    - Statistical analysis shows that indications and leakage could be present as early as 16RFO
  - Flaw Evaluation Analysis
    - Deterministic analysis performed to determine the time it would take for postulated initial flaws to grow to the top of the J-groove weld and beyond, causing leakage
    - Preliminary Model shows that the flaw is not expected to grow through wall

Root Cause Results

- **Conclusions from the Root Cause**
  - Direct Cause – Primary Water Stress Corrosion Cracking (PWSCC)
  - No identified material or manufacturing issues that suggest the Davis-Besse head is unique
  - Using the higher head temperature the MRP Statistical Model more clearly projects the probability for PWSCC crack initiation as found during 16RFO
  - Crack Growth Models shows leakage is not expected over the next operating cycle
  - Inspection requirements of 10CFR50.55(a) were effective at detecting early degradation of the Alloy 600 material

CRDM Nozzle Restoration and Basis for Return of Reactor Vessel Head to Service

Ken Byrd - Manager,
Design Engineering

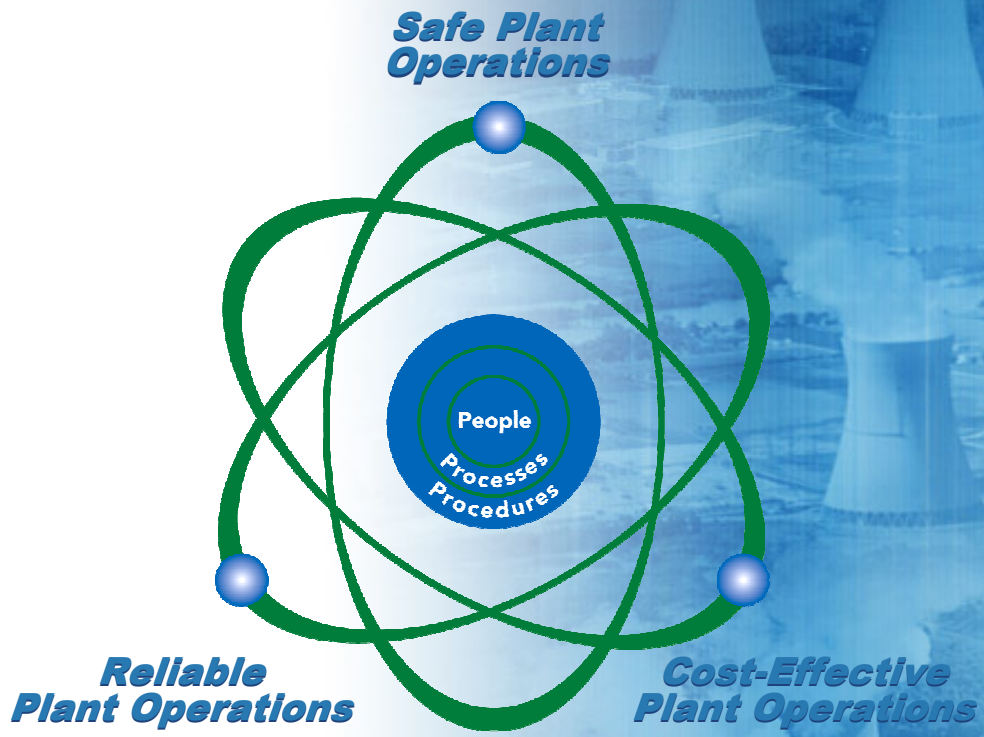

People with a strong safety focus
delivering top fleet operating performance.

CRDM Nozzle Modification

Nozzle Before Modification

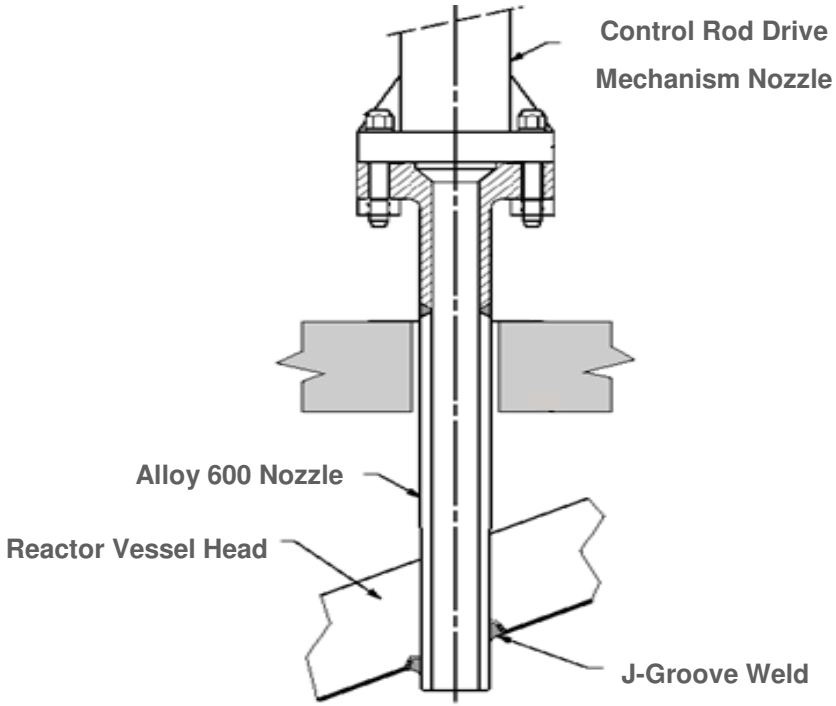

Nozzle After Modification

- **Modification moves the weld attachment to a region with no Primary Water Stress Corrosion Cracking (PWSCC) or flaws**

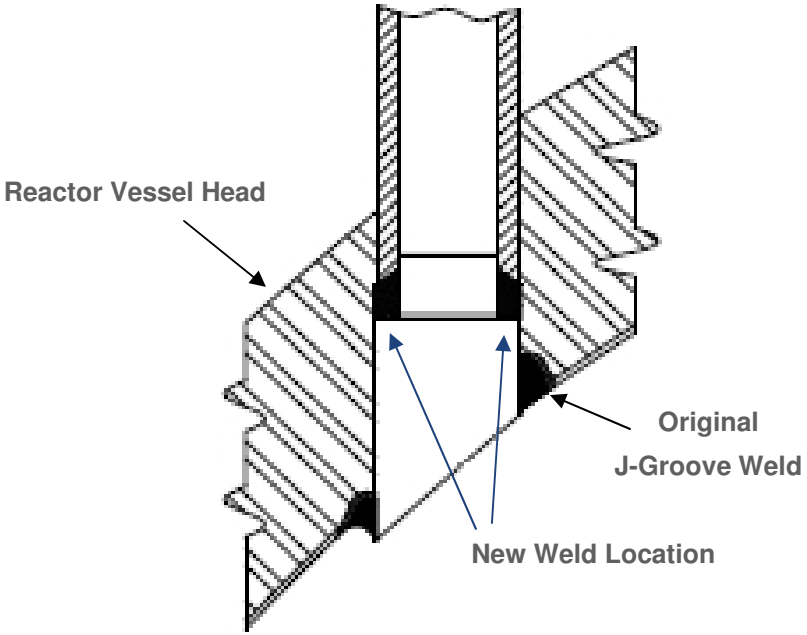

CRDM Nozzle Modifications

Control Rod Drive Mechanism Penetration Nozzle Before Repair

Control Rod Drive Mechanism Penetration Nozzle After Repair

CRDM Nozzle Modifications

- **Roll Expansion**
  - Secures nozzle in place
- **Machining**
  - Machine nozzle to move attachment weld to a region with no PWSCC degradation

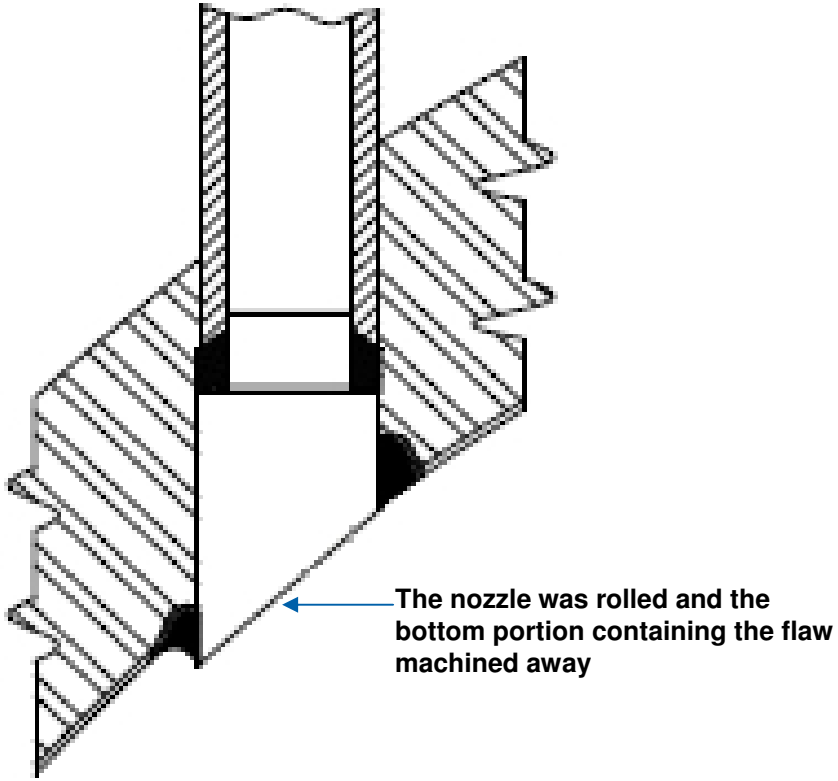

CRDM Nozzle Modifications

- **Structural Weld**
  - New weld material resistant to PWSCC
- **Post Weld Non Destructive Examination**
  - Ultrasonic and Liquid Dye Penetrant Examinations performed on modified area
- **Abrasive Water Jet (AWJ) Remediation**
  - AWJ induces compressive stress near the surface
  - Process inhibits PWSCC initiation

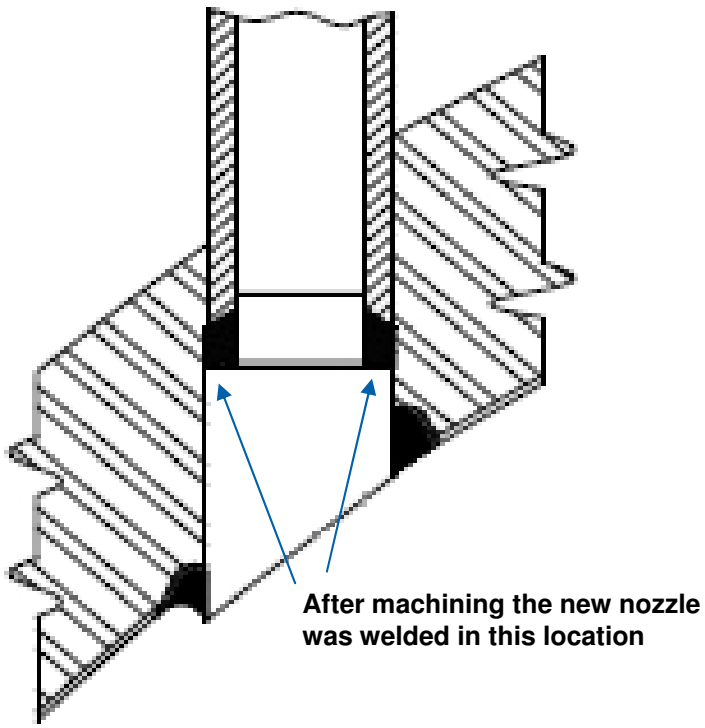

CRDM Nozzle Modifications

- **Summary of Key Points**
  - Modification process moves the higher stressed weld attachment to a region with no PWSCC or flaws
  - Method includes post repair remediation to provide extended life for repair
  - Proven industry practice

Control Rod Drive Mechanism Penetration Nozzle After Repair

Basis for Return of Reactor Vessel Head to Service

- **All nozzles with indications of degradation were modified**
- **Remaining Nozzles and J-Groove Welds meet or exceed regulatory and ASME Code requirements through a combination of either Visual Examination (VT), UT, PT, or ET Examinations**
- **Reactor Vessel (RV) Head is being returned to service in a fully restored condition**
- **RV Head will support safe and reliable operation**

Basis of Operation for Cycle 17

Ken Byrd - Manager,
Design Engineering

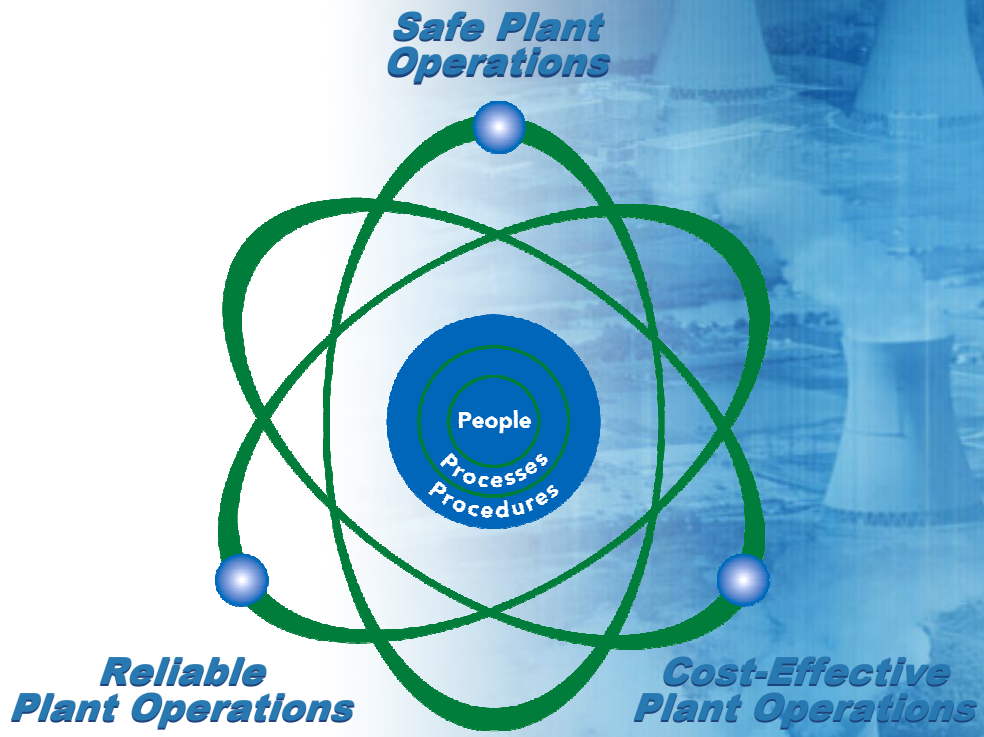

People with a strong safety focus
delivering top fleet operating performance.

Basis of Operation for Cycle 17

- **Davis-Besse plans to perform next Reactor Vessel Head inspection in early 2012**

- **Inspection frequency is governed by ASME Boiler & Pressure Vessel Code Case N-729-1**
  - Reinspection frequency is in accordance with Re-inspection Year (RIY) parameter
  - Inspection requirements of 10CFR50.55(a) were effective at detecting early degradation of the Alloy 600 material
  - RIY will be maintained less than the required 2.25
  - RIY is a function of head temperature and accumulated Effective Full Power Years (EFPY)

Basis of Operation for Cycle 17

- **Effective Full Power Years (EFPY)**
  - Accumulated Effective Full Power Years (EFPY) will be controlled by cycle length
  - Revised plan for Cycle 17 will provide a shorter cycle. EFPY accumulation will be almost 100 days less than the original plan.

Basis of Operation for Cycle 17

- **Head Temperature**
  - Temperature in the head region is dependent on the cycle core design
  - The current core design for Cycle 17 will provide about a 3 degree reduction in average Head Temperature throughout Cycle 17 as compared to Cycle's 14 through 16
  - Reinspection Year (RIY) will be conservatively based on the highest core exit temperature in center region instead of an average temperature
  - Reactor temperatures will be periodically monitored to support RIY calculation

Basis of Operation for Cycle 17

- **Cycle 17 Operational Changes that will minimize PWSCC Growth**
  - Shorter cycle length
  - Lower head temperature through core design

- **Safety for Cycle 17 will be assured by compliance with 10CFR 50.55(a) and ASME Code Case requirements with several conservative factors providing additional safety assurance**
  - Re-inspection Year (RIY) determination based on highest temperature in center region of the core
  - Liquid Dye Penetrant Testing (PT) or Eddy Current Testing (ET) examinations of all J-Groove welds during 16RFO exceed ASME Code Case requirements

Inspections for 17RFO

- **Code Required Inspections**
  - Examinations will meet the requirements as modified in 10CFR50.55(a), which endorses ASME Code Case N-729-1 for all 69 nozzles

- **Additional Inspections**
  - Surface examinations beyond the code requirements on the Control Rod Drive Mechanism Penetration J-groove welds

Remaining Activities Required for Restart

Brian Boles – Director, Site Operations

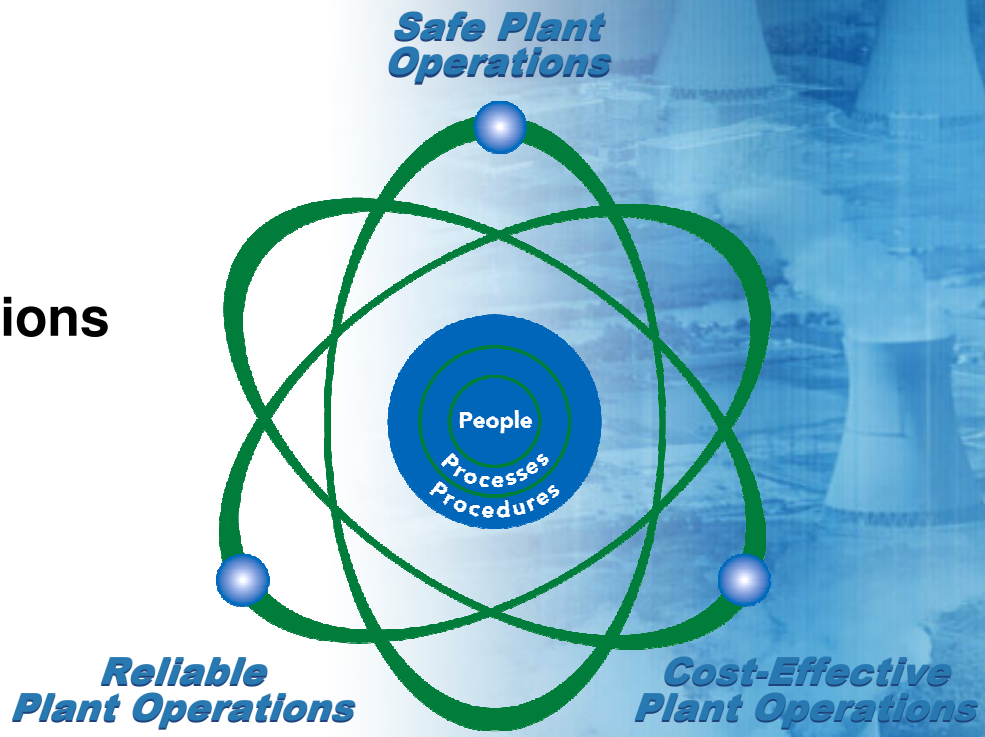

People with a strong safety focus delivering top fleet operating performance.

Remaining Activities for Restart

- **Re-install the Control Rod Drive Mechanisms on the Reactor Vessel Head**
- **Reload the Fuel into the Reactor Vessel**
- **Reactor Vessel Head Cleaning and Visual Inspection**
- **Install the Reactor Head on the Vessel**
- **Perform remaining Refueling Outage Testing**
- **Perform a Restart Readiness Assessment**
- **Return the Unit to safe and reliable Operation**

Plant Operator adjusts equipment in support of plant lineup activities for establishing Condenser vacuum

Summary of Actions Going Forward

- **Prior to Restart**
  - Provide the NRC with the Re-Inspection Year (RIY) calculation for Cycle 17
- **Cycle 17**
  - Provide the NRC with the final Crack Growth Rate Analysis for the RPV Head
  - Update the Root Cause Analysis Report and include the final Laboratory Results and Crack Growth Rate Analysis
  - Provide the NRC with an untested Nozzle Ring Sample
  - Provide the NRC with updated RIY calculations after every 6 months of operation
  - Will not exceed 2.25 RIY
- **RFO 17**
  - Perform volumetric examinations of CRDM Nozzles per 10CFR50.55(a)
  - Perform Surface Examinations of J-Groove welds left in service

Closing Comments

Barry Allen – Site Vice President

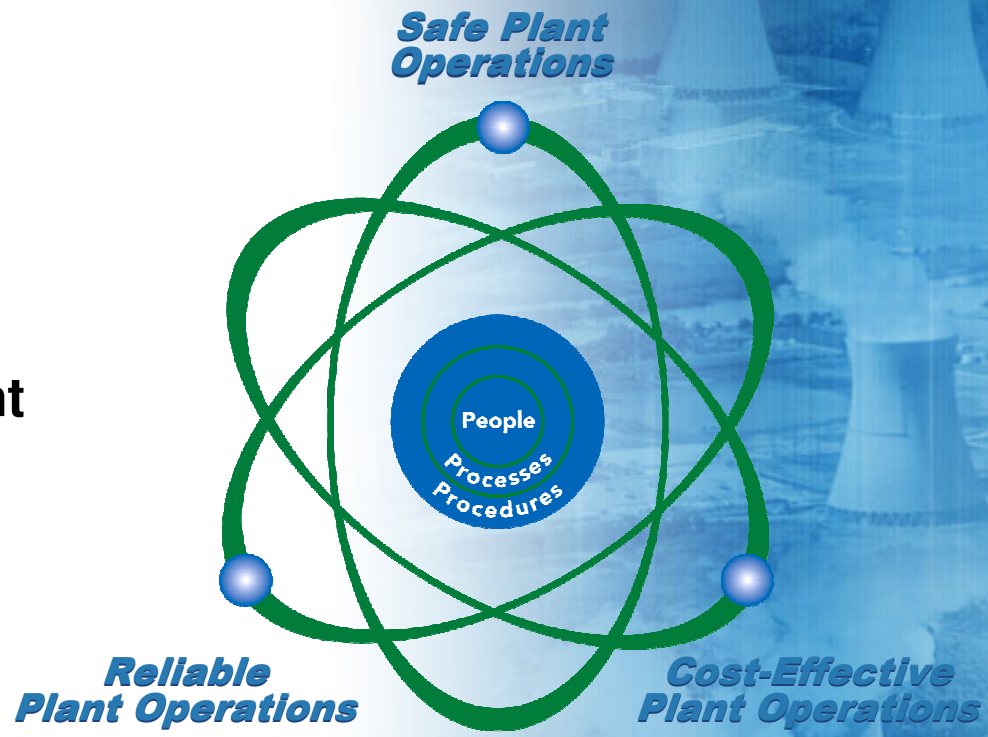

People with a strong safety focus
delivering top fleet operating performance.

Conclusion

- **Inspection requirements of 10CFR50.55(a) were effective at detecting early degradation of the Alloy 600 material**
- **The cause of the Control Rod Drive Mechanism Nozzle cracking has been thoroughly investigated**
- **We found no unique characteristics with the replacement head**
- **We developed a new method to model Reactor Vessel Head temperatures**
- **We restored the design margin for the Reactor Vessel Head with the modification and inspections performed**
- **With this information, we have developed actions and operational parameters to ensure we have satisfactory operating margin going forward**
- **Davis-Besse is ready to return to safe and reliable operation**