ELECTRIC POWER RESEARCH INSTITUTE

BWRVIP-76NP-A: BWR Vessel and Internals Project

BWR Core Shroud Inspection and Flaw Evaluation Guidelines

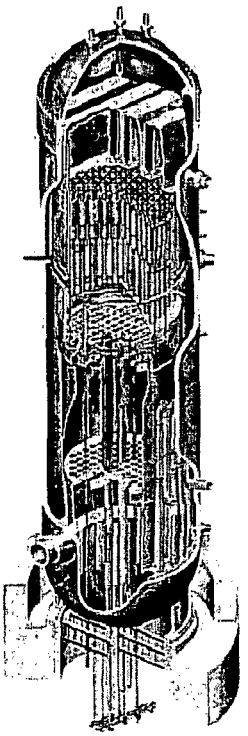

NON-PROPRIETARY INFORMATION

NOTICE: This report contains the non-propriety information that is included in the proprietary version of this report. The proprietary version of this report contains proprietary information that is the intellectual property of BWRVIP utility members and EPRI. Accordingly, the proprietary report is available only under license from EPRI and may not be reproduced or disclosed, wholly or in part, by any Licensee to any other person or organization.

BWRVIP-76NP-A: BWR Vessel and Internals Project

BWR Core Shroud Inspection and Flaw Evaluation Guidelines

1019057NP

Final Report, December 2009

EPRI Project Manager
R. Carter

ELECTRIC POWER RESEARCH INSTITUTE
3420 Hillview Avenue, Palo Alto, California 94304-1338 • PO Box 10412, Palo Alto, California 94303-0813 • USA
800.313.3774 • 650.855.2121 • askepri@epri.com • www.epri.com

DISCLAIMER OF WARRANTIES AND LIMITATION OF LIABILITIES

THIS DOCUMENT WAS PREPARED BY THE ORGANIZATION(S) NAMED BELOW AS AN ACCOUNT OF WORK SPONSORED OR COSPONSORED BY THE ELECTRIC POWER RESEARCH INSTITUTE, INC. (EPRI). NEITHER EPRI, ANY MEMBER OF EPRI, ANY COSPONSOR, THE ORGANIZATION(S) BELOW, NOR ANY PERSON ACTING ON BEHALF OF ANY OF THEM:

(A) MAKES ANY WARRANTY OR REPRESENTATION WHATSOEVER, EXPRESS OR IMPLIED, (I) WITH RESPECT TO THE USE OF ANY INFORMATION, APPARATUS, METHOD, PROCESS, OR SIMILAR ITEM DISCLOSED IN THIS DOCUMENT, INCLUDING MERCHANTABILITY AND FITNESS FOR A PARTICULAR PURPOSE, OR (II) THAT SUCH USE DOES NOT INFRINGE ON OR INTERFERE WITH PRIVATELY OWNED RIGHTS, INCLUDING ANY PARTY'S INTELLECTUAL PROPERTY, OR (III) THAT THIS DOCUMENT IS SUITABLE TO ANY PARTICULAR USER'S CIRCUMSTANCE; OR

(B) ASSUMES RESPONSIBILITY FOR ANY DAMAGES OR OTHER LIABILITY WHATSOEVER (INCLUDING ANY CONSEQUENTIAL DAMAGES, EVEN IF EPRI OR ANY EPRI REPRESENTATIVE HAS BEEN ADVISED OF THE POSSIBILITY OF SUCH DAMAGES) RESULTING FROM YOUR SELECTION OR USE OF THIS DOCUMENT OR ANY INFORMATION, APPARATUS, METHOD, PROCESS, OR SIMILAR ITEM DISCLOSED IN THIS DOCUMENT.

ORGANIZATION(S) THAT PREPARED THIS DOCUMENT

Electric Power Research Institute (EPRI)

NON-PROPRIETARY INFORMATION

NOTICE: This report contains the non-propriety information that is included in the proprietary version of this report. The proprietary version of this report contains proprietary information that is the intellectual property of EPRI. Accordingly, the proprietary report is available only under license from EPRI and may not be reproduced or disclosed, wholly or in part, by any Licensee to any other person or organization.

THE WORK DESCRIBED IN THE FOLLOWING SECTIONS OF THIS REPORT WAS PROCURED AND PREPARED ACCORDING TO EPRI'S QUALITY ASSURANCE PROGRAM, WHICH COMPLIES WITH THE REQUIREMENTS OF TITLE 10 OF THE CODE OF FEDERAL REGULATIONS, PART 50, APPENDIX B: SECTIONS 2 AND 3 AND APPENDICES A, B, D, E, F, G, H, I AND J.

NOTE

For further information about EPRI, call the EPRI Customer Assistance Center at 800.313.3774 or *e-mail askepri@epri.com.*

Electric Power Research Institute, EPRI, and TOGETHER...SHAPING THE FUTURE OF ELECTRICITY are registered service marks of the Electric Power Research Institute, Inc.

Copyright © 2010 Electric Power Research Institute, Inc. All rights reserved.

NRC SAFETY EVALUATION

In accordance with an NRC request, the NRC Safety Evaluation immediately follows this page. Other NRC and BWRVIP correspondence on this subject are included in appendices.

Note: The changes proposed by the NRC in this Safety Evaluation as well those proposed by the BWRVIP in response to NRC Requests for Information have been incorporated into the current version of the report (BWRVIP-76-A).

UNITED STATES
NUCLEAR REGULATORY COMMISSION
WASHINGTON, D.C. 20555-0001

July 27, 2005

William Eaton, BWRVIP Chairman
Entergy Operations, Inc.
Echelon One
1340 Echelon Parkway
Jackson, MS 39213-8202

SUBJECT: SAFETY EVALUATION OF PROPRIETARY EPRI REPORT, "BWR VESSEL AND INTERNALS PROJECT, BWR CORE SHROUD AND INSPECTION AND FLAW EVALUATION GUIDELINES (BWRVIP-76)"

Dear Mr. Eaton:

The Nuclear Regulatory Commission (NRC) staff has completed its review of the Electric Power Research Institute (EPRI) proprietary report, "BWR Vessel and Internals Project, BWR Core Shroud and Inspection and Flaw Evaluation Guidelines (BWRVIP-76)," dated November 1999. This report was submitted by letter dated December 9, 1999, and supplemented by letters dated June 8, 2005, and May 30, 2006, for NRC staff review and approval. The BWRVIP also submitted the non-proprietary version of this report by letter dated February 29, 2000.

The BWRVIP-76 report combines the guidance from the following reports: BWRVIP-01, "BWR Core Shroud Inspection and Flaw Evaluation Guidelines (Revision 2)," BWRVIP-07, "Guidelines for Reinspection of BWR Core Shrouds," and BWRVIP-63, "Shroud Vertical Weld Inspection and Evaluation Guidelines." In addition, the BWRVIP-76 report incorporates information from NRC reviews and safety evaluations (SEs). By consolidating the reports, the BWRVIP-76 report defines generic acceptance standards and inspection intervals for horizontal and vertical welds in repaired and unrepaired core shrouds, and procedures for determining plant-specific inspection intervals when the generic acceptance standards are not applicable. The report also includes generic inspection intervals and acceptance standards for radial ring welds, repair hardware and repair anchorages in repaired core shrouds.

Enclosure 1 transmitted herewith contains sensitive unclassified information. When separated from Enclosure 1, this document is decontrolled.

The NRC staff has reviewed your submittal and the staff's SE is attached. The staff requests that the BWRVIP submit the -A version of the BWRVIP-76 report within 180 days of receipt of this letter. Please contact Meena Khanna of my staff at (301) 415-2150 if you have any further questions regarding this subject.

Sincerely,

Matthew A. Mitchell, Chief
Vessels & Internals Integrity Branch
Division of Component Integrity
Office of Nuclear Reactor Regulation

Enclosure:
Safety Evaluation

cc: BWRVIP Service List

cc:

Randy Stark, EPRI BWRVIP
Integration Manager
Raj Pathania, EPRI BWRVIP
Mitigation Manager
Ken Wolfe, EPRI BWRVIP
Repair Manager
Larry Steinert, EPRI BWRVIP
Electric Power Research Institute
P.O. Box 10412
3412 Hillview Ave.
Palo Alto, CA 94303

George Inch, Technical Chairman
BWRVIP Assessment Committee
Constellation Nuclear
Nine Mile Point Nuclear Station (M/S ESB-1)
348 Lake Road
Lycoming, NY 13093

Jeff Goldstein, Technical Chairman
BWRVIP Mitigation Committee
Entergy Nuclear NE
440 Hamilton Ave. (M/S K-WPO-11B)
White Plains, NY 10601

Amir Shahkarami, Executive Chairman
BWRVIP Integration Committee
Exelon Corp.
Cornerstone Bat Cantera
4300 Winfield Rd.
Warrenville, IL 60555-4012

Richard Anderson, Executive Chairman
BWRVIP Assessment Committee
Vice President, Nuclear
FirstEnergy Service Co.
Perry Nuclear Power Plant (M/S A-PY-200)
10 Center Road
Perry, OH 44081

Rick Libra, BWRVIP Vice Chairman
DTE Energy
Fermi Nuclear Plant (M/S 280 OBA)
6400 N. Dixie Highway
Newport, MI 48166-9728

Robin Dyle, Technical Chairman
BWRVIP Integration Committee
Southern Nuclear Operating Co.
42 Inverness Center Parkway
(M/S B234)
Birmingham, AL 35242-4809

Dewey Atwood, Technical Chairman
BWRVIP Repair Focus Group
Southern Nuclear Operating Co.
Post Office Box 1295
40 Inverness Center Parkway
(M/S B031)
Birmingham, AL 35242-4809

Charles J. Wirtz, Chairman
BWRVIP Inspection Focus Group
FirstEnergy Corp.
Perry Nuclear Power Plant
(M/S A250)
10 Center Road
Perry, OH 44081

Robert Carter, EPRI BWRVIP
Assessment Manager
Jeff Landrum, EPRI BWRVIP
Inspection Manager
EPRI NDE Center
P.O. Box 217097
1300 W. T. Harris Blvd.
Charlotte, NC 28221

Scott Oxenford, Executive Chairman
BWRVIP Mitigation Committee
Vice President, Technical Services
Energy Northwest
P.O. Box 968
Richland, WA 99352-0968

U. S. NUCLEAR REGULATORY COMMISSION
OFFICE OF NUCLEAR REACTOR REGULATION
SAFETY EVALUATION OF EPRI REPORT TR-114232,
"BWR VESSEL AND INTERNALS PROJECT, BWR CORE SHROUD AND
INSPECTION AND FLAW EVALUATION GUIDELINES (BWRVIP-76)"

1.0 INTRODUCTION

1.1 Background

By letter dated December 9, 1999, as supplemented by letters dated June 8, 2005, and May 30, 2006, the Boiling Water Reactor Vessel and Internals Project (BWRVIP) submitted for staff review and approval Electric Power Research Institute (EPRI) Proprietary Report TR-114232, "BWR Vessel and Internals Project BWR Core Shroud Inspection and Flaw Evaluation Guidelines (BWRVIP-76)," dated November 1999.

Core shroud cracking was first discovered in an overseas BWR in 1990. Subsequently, visual testing (VT) and ultrasonic testing (UT) techniques have detected cracking in core shrouds in an additional number of domestic and overseas BWRs. Crack indications have been found in the heat-affected zones (HAZs) of both the horizontal and the vertical welds. The predominant form of cracking is horizontally-oriented indications located in the HAZs of horizontal welds. Limited cracking has also been observed in the HAZs of vertical welds.

The BWRVIP-76 report combines the guidance from the following reports: "BWRVIP-01, "BWR Core Shroud Inspection and Flaw Evaluation Guidelines (Revision 2)," BWRVIP-07, "Guidelines for Reinspection of BWR Core Shrouds," and BWRVIP-63, "Shroud Vertical Weld Inspection and Evaluation Guidelines." In addition, the BWRVIP-76 report incorporates information from the Nuclear Regulatory Commission (NRC) staff reviews and safety evaluations (SEs). By consolidating the reports, the BWRVIP-76 report defines generic acceptance standards and inspection intervals for horizontal and vertical welds in repaired and unrepaired core shrouds, and procedures for determining plant-specific inspection intervals when the generic acceptance standards are not applicable. The report also includes generic inspection intervals and acceptance standards for radial ring welds, repair hardware, and repair anchorages in repaired core shrouds.

The BWRVIP-76 report contains several changes made to the previously published reports. These changes incorporate generic approaches and provide a unified and regulatorally accepted approach for ensuring the integrity of BWR core shrouds. The changes include:

- Increasing the inspection sample to 100% of accessible regions for all required Category B weld inspections,

ENCLOSURE

eliminating the distinction between baseline inspection and reinspection requirements, and defining inspection strategies that can be used at any time for determining inspection intervals, and
condensing and simplifying the inspection strategies and evaluation procedures for horizontal and vertical welds in repaired and unrepaired core shrouds, and for radial ring welds in repaired core shrouds.

The unified approach described in this report includes:

- generic classification of core shrouds according to the potential susceptibility to intergranular stress corrosion cracking (IGSCC) based on years of hot operation, core shroud material, and mean coolant conductivity during the first five cycles of operation,
- simplified guidelines for inspection of horizontal, vertical and radial ring welds in repaired and unrepaired shrouds, and for inspection of repair hardware in repaired core shrouds,
- generic definition of inspection location based on the shroud classification,
- generic definition of inspection interval based on the shroud classification and inspection results,
- [[Content Deleted - EPRI Proprietary Information inspection of accessible regions for all required weld inspections.]] TS
- definition of plant-specific evaluation procedures for determining inspection intervals based on inspection results, and
- change in shroud classification based on hot operating time or inspection results.

1.2 Purpose

The NRC staff reviewed the BWRVIP-76 report to determine whether it provides an acceptable level of quality for the inspection and flaw evaluation of the core shroud. The review considered: the consequences of component failures; potential degradation mechanisms and past service experience; the validity of the structural analyses models used based upon a mechanistic understanding of stress corrosion cracking (SCC); the ability of the proposed inspections to detect degradation in a timely manner; and, whether the given flaw evaluation and inspection criteria meet the American Society of Mechanical Engineers (ASME) Code and BWRVIP-established criteria.

1.3 Organization of this Report

A brief summary of the contents of the subject report is given in Section 2 of this SE, with the evaluation presented in Section 3. The conclusions are summarized in Section 4. The

presentation of the evaluation is structured according to the organization of the BWRVIP-76 report.

2.0 SUMMARY OF BWRVIP-76 REPORT

The BWRVIP-76 report addresses the following topics in the following order:

- Introduction - Provides the objective for a regulatorally-accepted, unified industry approach for inspecting horizontal, vertical and radial ring welds in repaired and unrepaired BWR core shrouds, and for inspecting repair components and anchorages in repaired shrouds. The report also provides a brief background review of prior industry inspections of these welds.

- Inspection Strategy for Welds in Unrepaired Shrouds - Provides inspection strategies and methods for horizontal welds in unrepaired core shrouds based on the category classification of the welds. Limitations are provided which address when a plant-specific evaluation is required. The report also provides the inspection requirements and acceptance standards for vertical welds.

- Inspection Strategy for Welds in Repaired Shrouds - Provides guidelines for recommended inspections of horizontal, vertical, and radial ring welds in repaired shrouds. This includes sampling of vertical welds and/or screening of horizontal welds. The report also provides the guidelines and suggested schedules for the inspection of the repaired components and the associated repair anchorages.

- Reporting Requirements - Provides guidance for reporting results of inspections that do, or do not, meet the inspection and evaluation (I&E) guidelines.

3.0 STAFF EVALUATION

The staff has reviewed the BWRVIP-76 report and the assessment is provided below.

3.1 Inspection Strategy for Welds in Unrepaired Shrouds

The staff noted that Section 2 of the BWRVIP-76 report provides inspection and evaluation strategies for horizontal and vertical welds in unrepaired core shrouds. However, the inspection strategy makes no distinction between baseline inspection and reinspection.

The inspection strategy for unrepaired shrouds depends on material, coolant conductivity, and operating time used to define the shroud categories identified in Appendix B of the BWRVIP-76 report.

3.1.1 Inspection Strategy for Horizontal Welds in Unrepaired Shrouds

The BWRVIP 76 report includes the inspection strategy for horizontal welds in unrepaired shrouds based on the category of the shroud as follows:

[[Content Deleted - EPRI Proprietary Information

Category A - These are shrouds that are fabricated from Type 304 stainless steel that have been in operation less than years with a coolant conductivity of less than µS/cm during the first 5 cycles of operation; or shrouds that are fabricated from Type 304L stainless steel that have been in operation less than years with a coolant conductivity of less than µS/cm during the first 5 cycles of operation. No inspection of Category A core shrouds is required.

Category B - These are shrouds that are fabricated from Type 304 stainless steel that have been in operation less than years with a coolant conductivity of greater than µS/cm during the first cycles of operation; or shrouds that are fabricated from Type 304L stainless steel that have been in operation less than years with a coolant conductivity of greater than µS/cm during the first cycles of operation; or shrouds that are fabricated from Type 304L stainless steel that have been in operation greater than years with a coolant conductivity of less than µS/cm during the first cycles of operation.

The BWRVIP-76 report requires that % of the accessible regions of welds H3, H4, H5, and H7 be inspected. If a plant has more than one H4-type weld, only one of the welds needs to be inspected. If more than % of the length of a weld is inspected and the observed cracking is less than 10 percent of the inspected length, the weld is acceptable for continued operation. The reinspection interval ("end of interval" or (EOI)) for that weld is years. If the observed cracking is less than percent of the inspected length but less than percent of the weld was inspected, then a plant-specific evaluation must be performed using the guidelines identified in Appendix D, "Plant Specific Evaluation Procedure: Horizontal Welds," to determine the uncracked ligament lengths needed at the horizontal weld to ensure adequate structural margins. If the observed cracking in any weld is greater than percent of the inspected length, then the shroud is reclassified as Category C and the inspection requirements for Category C shrouds apply.

Category C - These are shrouds that are fabricated from Type 304 stainless steel that have been in operation greater than years or that are fabricated from Type 304L stainless steel that have been in operation greater than years with a coolant conductivity of greater than µS/cm during the first cycles of operation or have been classified into this category based upon inspection results from the BWRVIP-76 inspections. These are shrouds that are judged to have a potential for significant cracking. Inspections include % of accessible regions of welds H1 through H7, inclusive. If the inspected length of a weld is less than percent, a plant-specific analysis must be performed to determine the EOI for that weld. If the inspected length is greater than percent, the EOI for the weld is determined from Table 2-1. Table 2-1 either provides an EOI directly or requires that a plant-specific evaluation be performed. Inspection of vertical welds in this category are discussed in Section 3.2 of this SER.

]] TS

x

The BWRVIP-76 report indicates that all inspections shall be in accordance with the BWRVIP-03 report, "RPV and Internals Examination Guidelines." The BWRVIP-76 report states that the preferred inspection techniques are volumetric inspections (UT), and/or a "two- sided exam." The staff notes that a "two sided exam" in the context of this report means a two sided examination (from the outer diameter and the inner diameter of the shroud welds) conducted using enhanced visual testing (EVT-1), eddy current testing (ECT), or any other visual or surface testing method approved in the BWRVIP-03 report. The staff recommends that the BWRVIP revise the BWRVIP-76 report to indicate that all inspections shall be in accordance with the most recent version of the BWRVIP-03 report.

The staff finds that the proposed inspection strategy for horizontal welds in unrepaired core shrouds is adequate because the inspection scope, inspection methods and frequency of inspections will maintain the integrity of the welds and of the core shroud. However, as stated above, the staff recommends that the BWRVIP revise the BWRVIP-76 report to indicate that all inspections shall be in accordance with the most recent version of the BWRVIP-03 report.

3.1.2 Inspection Strategy for Vertical Welds in Unrepaired Category C Shrouds

The inspection of vertical welds is required for certain Category C shrouds. Inspection of vertical welds is required for Category C shrouds in which cracking has been observed in the adjacent horizontal welds. For Category C shrouds, required vertical weld inspections are dependent on the degree of cracking in adjacent horizontal welds. The BWRVIP-76 report includes an inspection approach which screens each vertical weld based on the condition of adjacent horizontal welds (discussed further in Section 3.1.2.3 of this SER). Vertical welds are not required to be inspected if the adjacent horizontal welds meet the screening criteria. If the horizontal welds do not meet the screening criteria, the adjacent vertical welds must be inspected and the results of those inspections must meet specific acceptance criteria. If the acceptance criteria are not met, a plant-specific evaluation must be performed. Appendix E of the BWRVIP-76 report describes the analytical evaluations that the screening and acceptance criteria are based upon.

It is stated in the BWRVIP-76 report that if a vertical weld does not need to be inspected (because the adjacent horizontal welds satisfied the screening criteria), then the EOI for that vertical weld is equal to the shortest EOI of the adjacent horizontal welds. When the horizontal weld with the shorter EOI is reinspected, the vertical weld will be reevaluated based on the new inspection results. If the new inspection results of the horizontal welds do not meet the screening criteria, the affected vertical welds must be inspected during the same outage or, alternatively, a plant-specific analysis may be performed (discussed further in Section 3.1.2.4 of this SER).

In addition, it is also stated in the BWRVIP-76 report that if a vertical weld does need to be inspected, its EOI is determined differently. An initial inspection (using methods as discussed in Section 3.1.2.1 of this SER) of the vertical weld will be performed and must satisfy the acceptance criteria for continued operation. The EOI is then determined by growing any cracks

found using an acceptable crack growth rate. The EOI is the point in time when the observed crack or cracks have grown to a point that analytical integrity criteria can no longer be satisfied. The acceptance standards to be applied for vertical weld inspections are discussed in Section 3.1.2.5 of this SER.

In a letter dated June 8, 2005, responding to the staff's request for additional information (RAI) question No. 76-2, whereby the staff requested that the BWRVIP provide additional detail regarding the statement concerning the use of "an acceptable crack growth rate," the BWRVIP responded by proposing to revise the text in Section 2.3.1 to state, "To determine the EOI, any cracks found in the weld will be grown using crack growth rates approved by the BWRVIP (i.e., the BWRVIP-14 report, "Evaluation of Crack Growth in BWR Stainless Steel RPV Internals," or the BWRVIP-99 report, "Crack Growth Rates in Irradiated BWR SS Internal Components"). The BWRVIP also stated that any guidance regarding approved crack growth rates will be submitted to the NRC for review. The staff finds the BWRVIP's response to RAI No. 76-2 acceptable, as it provides an adequate approach for defining acceptable crack growth rates.

[[Content Deleted - EPRI Proprietary Information

It is concluded in the BWRVIP-76 report that each vertical weld will have an individual EOI based either on its as-found condition or on the EOI of the adjacent horizontal welds, whichever has a shorter EOI. In addition, it is stated that reinspection of each vertical weld must be performed at or before its EOI is reached with a maximum EOI of either or years, depending on the inspection methods.]] TS

The staff finds that the BWRVIP has adequately addressed the inspection guidelines for vertical welds in unrepaired Category C shrouds in the BWRVIP-76 report and finds the guidelines to be comprehensive and therefore acceptable.

3.1.2.1 Inspection Methods for Vertical Welds in Unrepaired Category C Shrouds

[[Content Deleted - EPRI Proprietary Information

The acceptance criteria for vertical welds are based on the determination that a sufficient amount of uncracked weld length exists to ensure its structural integrity. It is stated in the BWRVIP-76 report that if a volumetric exam or a two-sided exam is used to determine its structural integrity, welds will have a maximum EOI of years. The staff recommends that the BWRVIP revise the BWRVIP-76 report to indicate that the inspections must be performed in accordance with the most recent version of the BWRVIP-03 report. When one-sided visual exams are performed due to access limitations, then an EOI of years has been established for welds that have no observed cracks. If cracks are observed, a plant-specific evaluation must be performed.]] TS

In a letter dated June 8, 2005, the BWRVIP responded to the staff's RAI question No. 76-1, whereby the staff recommended that visual examinations should not be categorized as surface examinations in order to be consistent with Section XI of the American Society for Mechanical

Engineers (ASME) Code. The BWRVIP concurred with the staff's recommendation and proposed to delete the word "surface" from Section 2.3.1 and any other paragraph in the BWRVIP-76 report where it is used in this manner.

The staff finds that the BWRVIP adequately identified the inspection methods in the BWRVIP-76 report in order to maintain the structural integrity of the vertical welds in unrepaired Category C shrouds. However, as stated above, the staff recommends that the BWRVIP revise the BWRVIP-76 report to indicate that all inspections shall be performed in accordance with the most recent version of the BWRVIP-03 report.

3.1.2.2 Inspection Guidelines for Vertical and Radial Ring Welds in Unrepaired Category C Shrouds

Section 2.3.3 of the BWRVIP-76 report provides the inspection strategies for vertical welds and radial ring welds in Category C unrepaired BWR core shrouds. These strategies are applicable to the vertical welds lying between the horizontal H1 and H7 welds. The BWRVIP-76 report states that inspections of radial ring welds are not required for unrepaired shrouds since there are no significant safety consequences resulting from cracking of these welds given that the structural margins of the horizontal welds are maintained.

The inspection strategy for vertical welds, as discussed in the BWRVIP-76 report, includes screening or sampling procedures to determine the vertical welds that need to be inspected. For the welds that need to be inspected, acceptance criteria are provided in the BWRVIP-76 report to determine if the vertical welds have sufficient structural capacity for continued operation.

The acceptance criteria are based on the projected extent of cracking at EOI. The projected cracking is to be based on the as-found inspection results and an acceptable crack growth rate. The BWRVIP-76 report includes the following guidelines that shall be used to determine the crack depth and length at EOI:

[[Content Deleted - EPRI Proprietary Information

- crack growth rates for changes in length shall be in/hour at ends, and]] TS
- crack growth rates for changes in depth shall be based on the BWRVIP-14 (K-independent crack growth rate of 2.2 x 10^{-4} in/hour or other NRC approved value.

In addition, the BWRVIP-76 report states that for plant-specific analyses, K-dependent crack growth rate methods based on the BWRVIP-14 report can be used, but must be justified.

It is also stated in the BWRVIP-76 report that in evaluating vertical welds, credit may be taken for previous inspections of horizontal or vertical welds provided those inspections satisfied the requirements of BWRVIP-03. If previous results are used, the time elapsed since the exam should be considered in calculating an EOI for each weld.

The staff finds that the BWRVIP has provided comprehensive guidelines in the BWRVIP-76 report with respect to the inspection strategy for the vertical and radial ring welds of the core shroud. However, the staff recommends that the BWRVIP revise the BWRVIP-76 report to indicate that credit may be taken for previous inspections of horizontal or vertical welds provided those inspections satisfied the requirements of the most recent version of the BWRVIP-03 report.

3.1.2.3 Screening of Vertical Welds as a Function of Horizontal Welds in Unrepaired Shrouds

Section 2.3.3.1 of the BWRVIP-76 report states that structural evaluations have determined that shroud integrity can be demonstrated in the presence of vertical weld cracking given that cracking in intersecting horizontal welds is not significant. Consequently, the inspection of vertical welds in unrepaired shrouds is applicable only to Category C shrouds, which are shrouds where significant cracking either is anticipated or has been detected. In this instance, the vertical welds that are to be inspected are determined by a screening process of the cracking detected in horizontal welds located at each end of the vertical weld.

The screening process, as defined in Section 2.3.3.1 of the BWRVIP-76 report, is applicable only for horizontal welds whereby the inspections required by Section 2.2 of BWRVIP-76 report have been completed. The screening process is not applicable if the horizontal welds have not been inspected per the requirements of Section 2.2 of the BWRVIP-76 report. If the horizontal welds have not been inspected, then the vertical welds shall be inspected in accordance with the criteria described in Section 2.3.3.2 of the BWRVIP-76 report.

It is stated in the BWRVIP-76 report that an inspection of a particular vertical weld is not required if any of the following is true for the horizontal welds at each end of the vertical weld, where the EOI for each horizontal weld has been determined in accordance with Section 2.2 of the BWRVIP-76 report:

[[Content Deleted - EPRI Proprietary Information

a) the as-found cracking in each horizontal weld is less than % of the inspected length for each weld, or

b) the average crack depth, d_a, in each horizontal weld is projected to be less than % through-wall at EOI. In addition, at least % of the inches of the horizontal weld adjacent to the intersection of the horizontal and vertical welds (inches on either side of the vertical weld) must be inspected and the maximum flaw depth in this inspected region must not be projected to be greater than % through-wall at EOI (i.e., maximum depth at EOI is less than %), or

c) there are no crack indications in the horizontal welds which are projected to be within inches on either side of the vertical weld at the intersection of the vertical weld and each of the horizontal welds at EOI.]] TS

The BWRVIP-76 report also states that the EOI for the vertical weld that has two intersecting horizontal welds that pass the horizontal weld screening criteria is equal to the lower EOI for the horizontal welds at each end of the vertical weld.

It is also discussed in the BWRVIP-76 report that vertical welds that intersect a horizontal weld that do not meet at least one of the three horizontal weld-screening criteria must be inspected. The inspection regions for these vertical welds are defined in Section 2.3.3.2 of the BWRVIP-76 report and are addressed in Section 3.1.2.4 of this SER.

The staff finds that the BWRVIP has adequately addressed the screening process for horizontal welds in unrepaired shrouds because shroud integrity can be demonstrated in the presence of vertical weld cracking, given that cracking in intersecting horizontal welds is not significant.

3.1.2.4 Inspection Requirements for Vertical Welds

[[Content Deleted - EPRI Proprietary Information

The BWRVIP-76 report states that vertical welds in unrepaired Category C shrouds for which the adjacent horizontal welds do not meet the screening requirements of Section 2.3.3.1 of the BWRVIP-76 report must be inspected nor[illegible] of their accessible length. The BWRVIP-76 report also states that these inspections shall be performed with volumetric or two-sided exam techniques (per the BWRVIP-03 report) wherever possible. If access is not available for a two-sided visual or full volumetric exam sufficient to demonstrate compliance with the acceptance criteria, then a one-sided exam conducted using EVT-1, ECT, or any other visual or surface testing method approved in the BWRVIP-03 report may be used. The inspection results shall be evaluated as identified in Section 2.3.3.3 of the BWRVIP-76 report and is discussed in Section 3.1.2.5 of this SER.]] TS

The staff finds that the BWRVIP adequately identified the inspection methods for the vertical welds in the BWRVIP-76 report in order to maintain the structural integrity of these welds. However, the staff recommends that the BWRVIP revise the BWRVIP-76 report to refer to the most recent version of the BWRVIP-03 report regarding the volumetric or two-sided exam techniques with respect to the inspections of the vertical welds.

3.1.2.5 Acceptance Standards for Vertical Welds

The acceptance standards related to the inspection of the vertical welds in unrepaired Category C shrouds are discussed in Section 2.3.3.3 of the BWRVIP-76 report. A summary of these acceptance standards are provided below.

[[Content Deleted - EPRI Proprietary Information

If the weld has been inspected using a full volumetric or two-sided exam technique and no cracking is detected, the weld is acceptable for [illegible] years of operation.]] TS

If the weld has been inspected using a full volumetric or two-sided exam technique and cracking is detected, the weld must be evaluated according to the following acceptance

[[Content Deleted - EPRI Proprietary Information
standards using an EOI that does not exceed years. A vertical weld is acceptable for continued operation through the EOI if any one of the following conditions is satisfied:

a) the inspected length of the vertical weld is greater than % of the total length of the weld and the as-found cracking is less than % of the inspected length of the weld, or

b) the inspected length of the vertical weld is greater than % of the total length of the weld, the average crack depth, d_a, is projected to be less than % through-wall at EOI, and no through-wall cracking is observed during the inspection, or

c) there is projected to be at least inches of uncracked weld metal in the vertical weld within inches of the toe of the horizontal welds at EOI. In addition, there is projected to be a minimum of inches separating any two crack indications within the inches at EOI.]] TS

In addition, it is stated in the BWRVIP-76 report that if the acceptance criteria cannot be satisfied, a plant-specific evaluation for the vertical weld must be performed or the EOI must be reduced to a time where the acceptance standards for the vertical weld are met. Plant-specific evaluations should include structural considerations and leakage considerations, if through-wall cracking was observed during the inspection. Relevant inspection data can also be used to demonstrate the acceptability of the vertical weld. Appendix F of the BWRVIP-76 report identifies a number of methodologies for evaluation of through-wall and part-through-wall cracking.

[[Content Deleted - EPRI Proprietary Information
The BWRVIP-76 report also states that if the vertical weld has been inspected using a one-sided exam technique (EVT-1, ECT, or any other visual or surface testing method approved in the BWRVIP-03 report) and no cracking was detected, the weld is acceptable for years of operation. If the weld has been inspected using this one-sided exam technique and crack indications were detected, the acceptance criteria in this section cannot be used and a plant-specific analysis must be performed using the guidelines in Appendix F of the BWRVIP-76 report.]] TS

The BWRVIP-76 report identifies that each vertical weld shall be re-evaluated at or before its EOI is reached. This re-evaluation may take the form of a screening process based on new information regarding the horizontal welds or it may include inspection of the vertical welds.

The staff finds that the BWRVIP has adequately addressed the inspection requirements and the acceptance standards for vertical welds in unrepaired Category C shrouds because the inspection methods and the inspection frequency identified will maintain the integrity of these welds.

3.2 Inspection Strategy for Welds in Repaired Shrouds

It is stated in the BWRVIP-76 report that the inspection and evaluation strategies for welds in repaired shrouds are applicable to horizontal and vertical welds, radial ring welds, repair components and anchorages. It is also stated that inspections are not required for horizontal or vertical welds that are structurally replaced by a repair.

By letter dated June 8, 2005, the BWRVIP provided its response to the staff's RAI question No. 76-3 which requested that the BWRVIP define "structurally replaced." The BWRVIP defined "structurally replaced" to indicate that the installed repair hardware is adequate to maintain the function of the shroud even if the welds are completely failed (i.e., 100% through-wall cracked over the entire length of the welds). The BWRVIP provided an example of a tie rod repair which structurally replaces the horizontal welds. The tie rods are designed to prevent vertical displacement of the shroud rings even if the horizontal welds are completely failed. Based on this information, the staff finds that the BWRVIP adequately responded to RAI No. 76-3.

The staff finds that the BWRVIP has provided comprehensive guidelines in the BWRVIP-76 report with respect to the inspection strategy for welds in repaired shrouds.

3.2.1 Vertical Welds in Repaired Shrouds

The BWRVIP-76 report states that any vertical weld that intersects a repaired horizontal weld will be evaluated by one of two options as described below:

Option A - Sampling of Vertical Welds:

[[Content Deleted - EPRI Proprietary Information of the accessible length of all vertical welds shall be inspected over the next two successive refueling outages, after the repair, with at least % of the accessible portions inspected at the first outage. The inspection conducted during the first outage should include a high percentage of the beltline welds. If the observed cracking in the first % of the welds exceeds % of the total inspected length, all of the remaining vertical welds shall be inspected during that outage.]] TS

The inspections shall be performed using a volumetric exam or a two-sided exam wherever possible. A one-sided visual exam may be used when access is not available.

The inspection results shall be evaluated in accordance with the same acceptance criteria as specified in Section 2.3.3.3 of the BWRVIP-76 report which also includes restrictions on the use of one-sided visual inspection results. If the acceptance criteria cannot be satisfied for the vertical welds selected for inspection using the sampling procedure defined in this option, then Option B may be used.

Option B - Screening of Horizontal Welds:

As in unrepaired shrouds, shroud integrity can be demonstrated in the presence of vertical weld cracking, given that cracking in intersecting horizontal welds is not significant. The requirements for screening of horizontal welds in unrepaired shrouds as discussed in Section 3.1.2.3 of this SER and the acceptance criteria can, therefore, be used to define the inspection and evaluation requirements for vertical welds in repaired shrouds.

A plant-specific evaluation must be used to define the re-inspection interval when neither Option A or Option B can be met. Appendix F of the BWRVIP-76 report provides guidance on techniques for plant-specific evaluations.

The staff finds that the guidelines regarding the inspections of the vertical welds in the repaired shrouds are acceptable because the inspections identified will adequately maintain the integrity of the welds and the shroud.

3.2.2 Inspection Strategy for Radial Ring Welds in Repaired Shrouds

In Section 3.4 of the BWRVIP-76 report, it is stated that inspection of certain radial ring welds may be required in repaired shrouds because they can be important for structural stiffness in some core shroud designs. The repair designer shall specify the inspection requirements for the radial ring welds in a repaired shroud. This should include a definition of which welds are required to be inspected and the allowable condition of those welds. Inspection of the radial ring welds is not required if the repair designer can demonstrate that the repair hardware does not rely on the integrity of these welds in order for it to function properly.

[[Content Deleted - EPRI Proprietary Information

It is also stated in the BWRVIP-76 report that if the ring segment welds are required for the shroud repair design, they shall be inspected to ensure that the design requirements are met at EOI. If the locations of the welds are known (i.e., from plant drawings), those specific locations shall be inspected from the outer diameter (OD) of the ring. If the locations are unknown, the inspection shall include % of the accessible portions of the OD of the ring segments.]] TS

The staff finds that the proposed inspection guidelines, as stated in the BWRVIP-76 report, for the radial ring welds in the repaired shrouds are acceptable because the inspection strategy will maintain the integrity of these welds.

3.2.3 Repair Component Inspections (Repair Assemblies and Other Components Added as Part of the Repair)

It is stated in Section 3.5 of the BWRVIP-76 report that detailed inspections of repair assemblies shall include a VT-3 visual examination of accessible locking devices, critical gap or contact areas, bolting, and the overall component. Bolt tightness shall be verified in cases

where it is critical in maintaining repair/replacement component operability. Detailed inspections may include additional requirements as specified by the designer.

By letter dated June 8, 2005, the BWRVIP provided its response to the staff's Supplementary RAI question No. 76-1, whereby the staff requested that the BWRVIP identify the additional inspections required by the "detailed" inspections for existing BWR designs. The BWRVIP responded by acknowledging that only a limited number of general shroud repair designs have been installed in the BWR fleet. The BWRVIP also indicated that the details of those designs could vary significantly from plant to plant. For example, the design of a lower tie rod attachment is different for a plant with a gusset-type shroud support plant than for a BWR/2 conical shroud support. Consequently, when details of the designs are considered, there are a large number of different configurations and the BWRVIP stated that they are not in a position to define specific inspections for each configuration. In addition, future designs may include additional differences from those that exist today. For this reason, the BWRVIP does not provide design-specific inspection requirements in the BWRVIP-76 report; however, there is a requirement in the BWRVIP-76 report whereby the utility is to consider vendor recommendations in developing a plant-specific inspection plan. Based on this information, the staff found the BWRVIP's response to RAI question No. 76-1 to be adequate.

[[Content Deleted - EPRI Proprietary Information

By Supplementary RAI question No. 76-2, the staff requested that the BWRVIP address why the year interval for performing inspections, as identified in Section 3.5 of the BWRVIP-76 report, is considered adequate to manage degradation of the repair assemblies and other components added as part of the repair. To demonstrate the adequacy of the year interval, the staff requested that the BWRVIP provide all data to display the impact of neutron fluence on the integrity of the repair/replacement materials (i.e., 316L, XM-19, and Inconel X-750). By letter dated June 8, 2005, the BWRVIP stated that a year reinspection interval for shroud repair hardware is reasonable for a number of reasons. First, the repair design utilizes materials which are more IGSCC-resistant as well as modern fabrication processes that minimize the potential for IGSCC in the repair hardware (sensitization is avoided, cold work is prohibited, etc.). The BWRVIP material requirements for core shroud repair designs are included in the BWRVIP-84 report, "Guidelines for Selection and Use of Materials for Repairs to BWR Internal Components," which was approved by the staff in its SE dated September 6, 2005. Second, the BWRVIP stated that the highly-stressed components of the repair hardware (i.e., tie rods) are located in regions of relatively low fluence. The fluence at the radial location of the tie rod near the core mid-plane is typically estimated to be on the order of n/cm² after approximately 40 years of exposure. The BWRVIP stated that this is below the fluence at which radiation is known to affect the structural properties of these materials.]] TS

The BWRVIP also stated that the BWRVIP-02, Revision 2 report, "Shroud Repair Design Criteria," requires that the repair shall be evaluated for the effects of irradiation relaxation utilizing end-of-life fluences. Allowances for these effects are included in the design of the repair. Finally, the BWRVIP stated that all thirteen U.S. plants with shroud repairs have performed one or more inspections of the repair hardware. While none of the re-inspections

[[Content Deleted - EPRI Proprietary Information

were performed years after the baseline (the first shroud repair was installed in early 1995), some of the re-inspections were performed as much as years after the baseline inspection. The BWRVIP further indicated that the only anomalies that have been observed were related to installation problems. These anomalies were corrected and subsequent inspections have shown that the anomalies have not re-occurred. No material degradation has been reported. In addition, the BWRVIP stated that extensive laboratory testing indicates that new Alloy X-750 parts will perform satisfactorily if they meet current specification requirements with regard to heat treatment, fabrication sequence, and stress and strain limits.

Based on the information provided above, the BWRVIP concluded that the year re-inspection interval for the shroud repair hardware is reasonable. The BWRVIP also stated that, "As with all inspection intervals recommended by the BWRVIP, this period would be adjusted if degradation is observed or if new information indicates that years is not an appropriate re-inspection interval."]] TS

However, since the submittal of the BWRVIP-76 report, the staff noted that there has been recent plant operating experience at Hatch, Unit 1 whereby the upper support arms (fabricated from Alloy X-750 material) of two of the four core shroud stabilizer brackets were found to have apparent SCC indications. Therefore, the staff requests that the BWRVIP include a discussion of this recent plant operating experience and include any lessons learned or additional guidelines in the -A version of the BWRVIP-76 report, as needed. Based on the information provided above and the BWRVIP's inclusion of any lessons learned from the Hatch, Unit 1 operating experience, the staff considers the response to the Supplementary RAI question No. 76-2 to be acceptable.

In a supplemental letter dated May 30, 2006, the BWRVIP addressed the generic impact of the Hatch, Unit 1 operating experience on the BWRVIP-76 report guidelines. In this supplemental letter, the BWRVIP summarized the event that occurred at Hatch, Unit 1 by indicating that crack-like indications were observed in the upper supports of the core shroud tie rod repair during a recent scheduled outage. The BWRVIP further indicated that the interim root cause assessment concluded that the probable root cause was determined to be IGSCC of the X-750 material. In addition, the BWRVIP stated that, "A final root cause will be available only after a destructive examination of the cracked material. Analyses and evaluations also concluded that the Hatch [Unit 1] condition is believed to represent bounding conditions for other BWRs with similar repairs." The BWRVIP then listed the following actions that will be taken based on the Hatch, Unit 1 experience:

1. The BWRVIP is continuing to work with Hatch and other organizations to understand the root cause and take appropriate follow-up actions.

2. The BWRVIP has issued a formal letter to all members identifying a "needed" requirement that plants with core shroud tie rod repairs inspect their tie rod repairs at their next scheduled outage. This should include inspections in all the same or similar locations where the Hatch [Unit 1] indications were observed.

XX

The letter also recommends that consideration be given to inspecting other locations in the tie rod repair where X-750 material may experience high sustained loads and therefore be susceptible to IGSCC.

3. Based on the information available at this time, no changes are needed to the core shroud and shroud repair inspection frequencies and methods described in [the] BWRVIP-76 [report]. The BWRVIP will continue to evaluate the impact of the Hatch [Unit 1] core shroud tie rod repair cracking on BWRVIP recommendations for core shroud and shroud repair inspection frequencies and methods (e.g., BWRVIP-76) as additional information becomes available.

4. The BWRVIP will evaluate the impact of the Hatch [Unit 1] core shroud tie rod repair cracking on other BWRVIP documents and recommendations.

The staff has determined that the BWRVIP adequately addressed the Hatch, Unit 1 event; however, the staff requests that the BWRVIP keep the staff informed of the results of the final root cause analysis. The staff further requests that if the BWRVIP determines that the root cause indicates that changes are needed to the BWRVIP material requirements or to the BWRVIP inspection guidelines, that the BWRVIP will adequately take appropriate action to address the impact of the Hatch, Unit 1 core shroud tie rod repair cracking as needed.

It is stated in the BWRVIP-76 report that bolt tightness may be verified by visually examining the repair assembly and verifying that threaded components are sealed and that there are no unintended gaps at tensioned member contact points. The BWRVIP-76 report also states that other means of verifying bolt tightness may be specified when visual examination is not feasible or adequate. However, the guidelines in the BWRVIP-76 report indicate that it is not necessary to confirm the amount of repair assembly preload during routine inspections of repair hardware.

The BWRVIP-76 report provides two schedule options for the inspection of repair components, as identified below:

[[Content Deleted - EPRI Proprietary Information

Option 1: Perform a detailed inspection of all repair assemblies after the first cycle. If all assemblies are satisfactory, no further inspections are required for years.

Option 2: Perform a detailed inspection of % of the assemblies after the first cycle and a of the other % of the assemblies. If the inspection results are satisfactory, detailed inspections of one-third of the remaining assemblies shall be performed during each of the next three outages. Re-inspect each assembly on a year cycle.]] TS

The BWRVIP-76 report also states that if a repair component is found to be degraded during an inspection, all other like components shall be inspected during the same outage.

The staff provided the following RAI question concerning bolting:

> The first paragraph of Section 3.5 of the BWRVIP-76 report states: "Bolt tightness shall be verified in cases where it is critical in maintaining repair/replacement component operability. Further, a detailed inspection may include additional scope as specified by the designer."
>
> The second paragraph of Section 3.5 of the BWRVIP-76 report states: "Bolt tightness may be verified by visually examining the repair assembly and verifying that threaded components are seated and there are no unintended gaps at tensioned member contact points. Alternately, other means of verification of bolt tightness may be specified where visual examination is not feasible or adequate. It is not necessary to confirm the amount of repair assembly preload during routine inspection of repair hardware."
>
> The staff interprets the first paragraph to require bolt tightness for components where it is critical to maintain repair and replacement operability. Visual inspections are not considered adequate for verifying bolt tightness and would not be acceptable to the staff in cases where bolt tightness is critical to component operability.
>
> The staff interprets the second paragraph to be the requirements that are followed for all other non-critical components.

Therefore, by Supplementary RAI question No. 76-3, the staff requested that the BWRVIP confirm if the staff's interpretation is correct and to clarify the first two paragraphs of Section 3.5 of the BWRVIP-76 report, accordingly.

In a letter dated June 8, 2005, the BWRVIP stated that all tie rod shroud repairs require that a certain amount of tension (or preload) be maintained in the tie rods during operating conditions in order to ensure that the shroud segments do not separate during normal or off-normal operation. This required preload is established in two different ways. In the repair designs used in most BWRs, the preload is developed due to differential thermal expansion between the tie rods and the core shroud. The tie rods are installed with essentially no preload; the initial preload on the rods is just sufficient to ensure that the tie rod assemblies remain properly positioned. As the reactor heats up, the core shroud expands more than the tie rods and thus develops the required preload in the tie rods.

For these designs, an inspection that ensures that no unintended gaps exist is adequate to ensure that the design preload will be obtained during heat-up and operation.

The BWRVIP stated that one U.S. BWR incorporates a shroud repair design that does not utilize differential expansion to develop the required preload. In this BWR, a specified preload

must be applied to the tie rods in the cold condition. This plant performs periodic inspections to verify that the required preload is present.

The BWRVIP proposed to clarify the inspection requirements by revising the second paragraph in Section 3.5 of the BWRVIP-76 report, as follows:

> Bolt tightness must be verified using an appropriate inspection technique. For some designs, it may be adequate to perform a visual inspection to verify that threaded components are seated and that there are no unintended gaps at tensioned member contact points. For other designs, it may be necessary to verify the tension in the tie-rods. Selection of the appropriate inspection technique depends on the details of the repair design. Vendor guidance shall be obtained in order to determine the appropriate inspection technique.

The staff considers the response to the Supplementary RAI question No. 76-3 to be acceptable because the BWRVIP has adequately addressed the staff's concerns regarding inspection techniques and requirements to ensure bolt tightness. The staff requests that the BWRVIP include its proposed response to Supplementary RAI question No. 76-3 in Section 3.5 of the -A version of the BWRVIP-76 report.

The staff finds the proposed inspection guidelines for repair components are acceptable because the inspections and the inspection frequencies identified above will ensure component integrity associated with the core shroud.

3.2.4 Repair Anchorage Inspections

[[Content Deleted - EPRI Proprietary Information

It is stated in the BWRVIP-76 report that the inspection requirements for repair anchorages are as follows: perform EVT-1 (per the guidelines in the BWRVIP-03 report, "Reactor Pressure Vessel and Internals Examination Guidelines, Revision 1") of the most highly stressed accessible load bearing weld of at least one repair assembly anchorage following the first operating cycle subsequent to the repair and then inspect the identical weld at each remaining assembly once every . . years. The most highly stressed weld may be, for example, a gussel weld. Horizontal shroud, shroud support plate and support plate-to-vessel welds (e.g., H8/H9 welds) are not highly stressed if the anchorage is to the shroud support plate. Therefore, inspection of these welds is not required as part of the anchorage inspection. Inspection of anchorages with no load bearing welds is encompassed within the requirements for inspection of repair hardware.]] TS

The BWRVIP-76 report states that if a repair anchorage is found to be degraded during an inspection, all other anchorages shall be inspected during the same outage.

It is also stated in the BWRVIP-76 report that the addition of repair assembly hardware may interfere with clear access to repair anchorage welds. Where this is the case, cleaning and inspection should be on a "best effort" basis. Repair hardware removal for cleaning and/or

inspection of repair anchorage welds is not required since it may introduce a significant risk of equipment damage.

The staff finds the inspection requirements for the repair anchorages to be acceptable because the inspections being performed will be on the most highly stressed accessible load bearing welds and will, therefore, maintain component integrity. However, the staff recommends that the BWRVIP revise the BWRVIP-76 report to refer to the most recent version of the BWRVIP-03 report instead of the BWRVIP-03, Revision 1 report with respect to the inspection requirements for the repair anchorages.

3.3 Reporting Requirements

3.3.1 Implementation of the I&E Guidelines

The BWRVIP-76 report states that if it is determined that implementation of the I&E guidelines as described cannot be achieved, or that meaningful results are not obtained, the user shall notify the BWRVIP with sufficient details to support the development of alternative actions. The notifications and the planned actions will be summarized and reported to the NRC.

The staff finds the BWRVIP's proposal with respect to the implementation of the guidelines to be acceptable.

3.3.2 Inspection Results

The BWRVIP-76 report states that results of the inspections recommended by the I&E guidelines shall be reported to the BWRVIP. The BWRVIP will summarize the inspection information and provide that information to the NRC. Individual reporting by the licensee is not required.

The staff finds the BWRVIP's proposal with respect to the reporting requirements to be adequate because the results will be provided to the staff via the BWRVIP inspection summary report. It should be noted, however, that this provision for having the BWRVIP report licensee inspection results does not replace the requirements placed on each licensee by 10 CFR 50.72 and 10 CFR 50.73, should the licensee's inspection results meet these reporting thresholds.

3.3.3 Analytical Evaluations of Inspection Results

The BWRVIP-76 report states that analytical evaluations performed in accordance with the guidance of this report for the acceptance of inspection results do not require a specific NRC review. However, the BWRVIP-76 report states that results of the analyses shall be reported to the NRC by the licensee. In addition, it is stated in the BWRVIP-76 report that analytical evaluations that deviate from the guidance of this report (i.e., assumptions, methods, acceptance criteria, etc.) shall be reported to the NRC within 30 days after completion of the inspection.

The staff finds the proposed analytical evaluations of the inspection results identified above to be acceptable because any analytical evaluation that deviates from the guidance of this report must be reported to the NRC.

Because the implementation guidelines and reporting requirements are included in the BWRVIP-94 report, "Program Implementation," the staff recommends that the BWRVIP include a reference to the most recent version of this report in Section 4.0 of the BWRVIP-76 report.

4.0 CONCLUSION

The staff has reviewed the BWRVIP-76 report and the supplemental information that was transmitted to the staff by letters dated June 8, 2005, and May 30, 2006. The modifications, clarifications, and supplemental information that were provided in response to the staff's RAIs, as addressed in Section 3 of this SE, are summarized below. The staff requests that these modifications, clarifications, and supplemental information be incorporated in the -A version of the BWRVIP-76 report.

- In response to the staff's RAI question No. 76-2, the BWRVIP proposed to revise the text in Section 2.3.1 of the BWRVIP-76 report to state, "To determine the EOI, any cracks found in the weld will be grown using crack growth rates approved by the BWRVIP (i.e., in the BWRVIP-14 or BWRVIP-99 reports)." The BWRVIP also indicated that the text would be revised to include that, "any guidance regarding approved crack growth rates will be submitted to the NRC for review."

- The staff recommends that the BWRVIP revise all of the sections in the BWRVIP-76 report, as applicable, to indicate that the inspections must be performed in accordance with the most recent version of the BWRVIP-03 report.

- In response to the staff's RAI question No. 76-1, the BWRVIP agreed with the staff's recommendation that visual examinations shall not be categorized as surface examinations. Therefore, the BWRVIP agreed to modify Section 2.3.2 and any other paragraph in the BWRVIP-76 report to delete the word "surface" where it is used in this manner.

- In response to the staff's RAI question No. 76-3, the BWRVIP indicated that it would include the following definition in Section 3.2 of the -A version of the BWRVIP-76 report: "Structurally replaced means that the installed repair hardware is adequate to maintain the function of the shroud even if the replaced welds are completely failed (i.e., 100 percent through-wall cracked over the entire length of the welds)."

- The staff requests that the BWRVIP keep the staff informed of the results of the final root cause analysis with regard to the Hatch, Unit 1 core shroud tie rod repair cracking event. The staff further requests that if the BWRVIP determines that the root cause indicates that changes are needed to the BWRVIP material requirements or to the

BWRVIP inspection guidelines, that the BWRVIP will adequately take appropriate action to address the impact of the Hatch, Unit 1 core shroud tie rod repair cracking as needed.

- In response to the staff's Supplementary question RAI No. 75-3, the BWRVIP proposed to clarify the inspection requirements by revising the second paragraph in Section 3.5 of the BWRVIP-76 report to state the following:

  > Bolt tightness must be verified using an appropriate inspection technique. For some designs, it may be adequate to perform a visual inspection to verify that threaded components are seated and that there are no unintended gaps at tensioned member contact points. For other designs, it may be necessary to verify the tension in the tie rods. Selection of the appropriate inspection technique depends on the details of the repair design. Vendor guidance shall be obtained in order to determine the appropriate inspection technique.

- The staff recommends that the BWRVIP include a statement in its "Record of Revisions" table, of the -A version of the BWRVIP-76 report, that licensees shall implement the reporting requirements in accordance with the most recent version of the BWRVIP-94 report since the most updated implementation guidelines and reporting requirements are included in that report.

The staff finds that the BWRVIP-76 report, as modified and clarified to incorporate the staff's recommendations, provides an acceptable technical justification with respect to the proposed inspections and flaw evaluation guidelines for the BWR core shrouds and core shroud repair hardware. The BWRVIP-76 report is considered by the staff to be acceptable for licensee usage, as modified by the staff requirements and recommendations given above, at any time during either a facility's current operating term or extended license period.

NRC ACCEPTANCE FOR REFERENCING REPORT FOR DEMONSTRATION OF COMPLIANCE WITH THE LICENSE RENEWAL RULE

UNITED STATES
NUCLEAR REGULATORY COMMISSION
WASHINGTON, D.C. 20555-0001

October 26, 2009

Mr. Rick Libra
Exelon
Chairman, BWR Vessel and Internals Project
Electric Power Research Institute
3420 Hillview Avenue
Palo Alto, CA 94304-1395

SUBJECT: ACKNOWLEDGEMENT OF BOILING WATER REACTOR VESSEL AND INTERNALS PROJECT LETTER CONCERNING CORRECTIONS TO FINAL SAFETY EVALUATION OF TOPICAL REPORT "BWR CORE SHROUD INSPECTION AND FLAW EVALUATION GUIDELINES (BWRVIP-76)" FOR LICENSE RENEWAL, APPENDIX K AND ISSUANCE OF FINAL SAFETY EVALUATION REVISION (TAC NO. ME2355)

Dear Mr. Libra:

By letter dated September 18, 2009, (Agencywide Documents Access and Management System (ADAMS) Accession No. ML092800513), the Boiling Water Reactor Vessel and Internals Project (BWRVIP) informed the U.S. Nuclear Regulatory Commission (NRC) staff that the fluence value stated in item 4 of Section 4.1 of the Safety Evaluation (SE) for Topical Report (TR) 114232, "BWR Core Shroud Inspection and Flaw Evaluation Guidelines (BWRVIP-76)" for License Renewal (LR), Appendix K transmitted by letter dated August 24, 2009 (ADAMS Accession No. ML091730020) is not correct. NRC staff reviewed BWRVIP's comments and incorporated identified corrections into this final SE, which supersedes the previous version.

By letter dated December 9, 1999 (ADAMS Accession No. ML082820712), as supplemented by letters dated June 8, 2005 (ADAMS Accession No. ML051640198), and April 21, 2008 (ADAMS Accession No. ML081200068), the BWRVIP submitted for NRC staff review and approval EPRI Proprietary TP 114232, "BWR Vessel and Internals Project, BWR Core Shroud Inspection and Flaw Evaluation Guidelines (BWRVIP-76)."

TR BWRVIP-76 combines the guidance from several BWRVIP TRs and incorporates information from several NRC staff reviews and SEs. By letter dated July 26, 2006 (ADAMS Accession No. ML062140594), the NRC staff issued the SE for BWRVIP-76. That SE did not cover the LR related to Appendix K, which was originally submitted with the TR.

Document transmitted herewith contains sensitive unclassified information. When separated from enclosures, this document is decontrolled.

In support of LR, NRC staff reviewed Appendix K of the BWRVIP-76 TR to determine whether its guidance will provide acceptable levels of quality for inspection and flaw evaluation of the subject safety-related reactor vessel internal (RVI) components during the period of extended operation. The review also considered compliance with the LR Rule in order to allow LR applications (LRAs) the option of incorporating the BWRVIP-76 guidelines by reference in a plant-specific integrated plant assessment (IPA) and associated time-limited aging analysis (TLAAs).

By letter dated April 9, 2009 (ADAMS Accession No. ML083310228), a draft SE regarding NRC staff approval of Appendix K of TR BWRVIP-76 was provided for your review and comment. By e-mail dated April 9, 2009 and letter dated June 17, 2009 (ADAMS Accession No. ML091700020) the BWRVIP commented on the draft SE. The NRC staff's disposition of the BWRVIP's comments on the draft SE are discussed in the attachment to the final SE enclosed with this letter.

The final SE includes an expectation that the approved version of BWRVIP-76 will be revised to address NRC's expectation that license renewal applicants address tie rod repairs, as discussed in NRC's July 2, 2007, request for additional information (ADAMS Accession No. ML071830529). This issue is discussed in Section 3.3 of the SE.

The NRC staff has reviewed Appendix K of TR BWRVIP-76 and finds that this BWRVIP report is acceptable for referencing in licensing documentation to the extent specified and under the limitations delineated in the BWRVIP report and in the enclosed SE. The SE defines the basis for our acceptance of Appendix K of TR BWRVIP-76.

Our acceptance applies only to material provided in the subject BWRVIP report. We do not intend to repeat our review of the acceptable material described in the BWRVIP report. When the BWRVIP report appears as a reference in licensing documentation, our review will ensure that the material presented applies to the specific plant involved. Licensees will be expected to implement the provisions of Appendix K of TR BWRVIP-76, subject to the limitations in the enclosed SE, as part of their BWRVIP program unless deviations from the requirements are justified. Licensees shall identify such deviations to the NRC staff in accordance with BWRVIP program requirements.

In accordance with the guidance provided on the NRC website, we request that BWRVIP publish accepted proprietary and non-proprietary versions of this TR within three months of receipt of this letter. The accepted versions shall incorporate this letter and the enclosed final SE after the title page. Also, they must contain historical review information, including NRC requests for additional information and your responses. The accepted versions shall include an "-A" (designating accepted) following the TR identification symbol.

If future changes to the NRC's regulatory requirements affect the acceptability of this TR, BWRVIP and/or licensees referencing it will be expected to revise the TR appropriately, or justify its continued applicability for subsequent referencing.

Sincerely,

Thomas B. Blount, Deputy Director
Division of Policy and Rulemaking
Office of Nuclear Reactor Regulation

Project No.: 704

Enclosure:
Final SEs (Non-Proprietary and Proprietary versions)

cc w/out: Enclosure 2

XXX

R. Libra
BWRVIP
Cc:

Randy Stark, EPRI BWRVIP
Integration Manager
Raj Pathania, EPRI BWRVIP
Mitigation Manager
Ken Wolfe, EPRI BWRVIP
Repair Manager
Larry Steinert, EPRI BWRVIP
Electric Power Research Institute
3420 Hillview Ave.
Palo Alto, CA 94304
rstark@epri.com
rpathan@epri.com
kwolfe@epri.com
lsteinert@contractor.epri.com

Bob Geier, Technical Chairman
BWRVIP Assessment Committee
Exelon Corporation
Cornerstone Hal Centera
4300 Winfield Rd.
Warrenville, IL 60555
robert.geier@exeloncorp.com

Dennis Rickertsen, Technical Chairman
BWRVIP Mitigation Committee
Southern Nuclear Operating Company
P. O. Box 1295 (M/S B234)
Birmingham, AL 35201-1295
drrickert@southernco.com

Paul J. Davison, Executive Chairman
BWRVIP Assessment Committee
PSEG Nuclear, LLC
Salem/Hope Creek Nuclear Station
11 Yubas Ave.
Burlington, NJ 08016
paul.davison@pseg.com

Denver Atwood, Chairman
BWRVIP Repair Focus Group
Southern Nuclear Operating Co
Post Office Box 1295
40 Inverness Center Parkway
(M/S B031)
Birmingham, AL 35242-4809
dgatwood@southernco.com

Rich Ciemiewicz, Chairman
BWRVIP Inspection Focus Group
Exelon Corporation
200 Exelon Way, Suite 210 (M/S KSA 2-N)
Kennett Square, PA 19349
richard.ciemiewicz@exeloncorp.com

Charles J. Wirtz, Technical Chairman
BWRVIP Integration Committee
FirstEnergy Corp.
Perry Nuclear Power Plant
(M/S A250)
10 Center Road
Perry, OH 44081
cjwirtz@firstenergycorp.com

Oscar Limpias, Executive Chairman
BWRVIP Integration Committee
Entergy Nuclear Operations, Inc.
Echelon One
1340 Echelon Parkway.
Jackson, MS 39213-8202
olimpia@entergy.com

Joe Donahue
BWRVIP Vice Chairman
V. P., Nuclear Engineering & Services
Progress Energy, Inc
410 S. Wilmington St. (M/S PEB8)
Raleigh, NC 27601-1849
joe.w.donahue@pgnmail.com

Richard Anderson
BWRVIP Executive Oversight Committee
Site Vice President
NextEra Energy Duane Arnold
Duane Arnold Energy Center
3277 DAEC Road
Palo, IA 52324-9785
rich.anderson@nexteraenergy.com

Robert Carter, EPRI BWRVIP
Assessment Manager
Jeff Landrum, EPRI BWRVIP
Inspection Manager
EPRI NDE Center
P.O. Box 217097
1300 W. T. Harris Blvd.
Charlotte, NC 28221
bcarter@epri.com
jlandrum@epri.com

Dennis Madison, Executive Chairman
BWRVIP Mitigation Committee
Site Vice President
Southern Nuclear Operating Co.
Edwin I. Hatch Nuclear Plant
US Hwy 1 N
Baxley, GA 31515-2010
dmmadison@southernco.com

FINAL SAFETY EVALUATION (SE) BY THE

OFFICE OF NUCLEAR REACTOR REGULATION

FOR ELECTRIC POWER RESEARCH INSTITUTE (EPRI)

BOILING WATER REACTOR (BWR) VESSEL AND INTERNALS PROJECT (BWRVIP)

TOPICAL REPORT (TR) "BWR VESSEL AND INTERNALS PROJECT, BWR CORE SHROUD

INSPECTION AND FLAW EVALUATION GUIDELINES (BWRVIP-76)"

FOR LICENSE RENEWAL (LR) - APPENDIX K

PROJECT NO. 704

1.0 INTRODUCTION

1.1 History: License Renewal Appendix

By letter dated December 9, 1999 (Agencywide Documents Access and Management System (ADAMS) Accession No. ML082620712), as supplemented by letters dated June 8, 2005 (ADAMS Accession No. ML051640498), and April 21, 2008 (ADAMS Accession No. ML081200068), the Boiling Water Reactor Vessel and Internals Project (BWRVIP) submitted for the U.S. Nuclear Regulatory Commission (NRC) staff review and approval, the Electric Power Research Institute (EPRI) Proprietary Topical Report TR 114232, "BWR Vessel and Internals Project, BWR Core Shroud Inspection and Flaw Evaluation Guidelines (BWRVIP-76)."

TR BWRVIP-76 combines the guidance from several BWRVIP TRs and incorporates information from several NRC staff reviews and Safety Evaluations (SEs). By letter dated July 28, 2006 (ADAMS Accession No. ML062140594), the NRC staff issued the SE for BWRVIP-76. That SE did not cover the License Renewal (LR) related Appendix K, which was originally submitted with the TR.

The review of Appendix K, "Guidelines for Inspection of BWR Core Shrouds; Demonstration of Compliance with the Technical Information Requirements of the License Renewal Rule under 10 CFR [Title 10 of the *Code of Federal Regulations*] Part 54.21," has now been completed by the NRC staff.

ENCLOSURE 2

In accordance with 10 CFR 54.21, each LR application (LRA) includes an integrated plant assessment (IPA) and an evaluation of time-limited aging analyses (TLAA). The IPA must identify and list those structures and components subject to an aging management review (AMR) and demonstrate that the effects of aging will be adequately managed so that their intended functions will be maintained consistent with the current licensing basis (CLB) for the period of extended operation. In addition, 10 CFR 54.22 requires that each application include any technical specification (TS) changes or additions necessary to manage the effects of aging during the period of extended operation as part of the renewal application.

If an LR applicant participating in the BWRVIP confirms that the BWRVIP-76 TR applies to its facility and that the results of the Appendix K IPA and TLAA evaluation are in effect at its plant, then no further review by the NRC staff of the issues described in the documents is necessary, except as specifically identified below by the NRC staff. With this exception, such an LR applicant may rely on the BWRVIP-76 TR for the demonstration required by 10 CFR 54.21(a)(3) with respect to the components and structures within the scope of the TR. Under such circumstances, the NRC staff intends to rely on the evaluation in this LR SE to make the findings required by 10 CFR 54.29 with respect to a particular application.

By referencing the BWRVIP-76 TR, as supplemented and modified, and meeting these limitations, an LR applicant will provide sufficient information that will enable the NRC staff to make a finding that there is reasonable assurance that the LR applicant will adequately manage the effects of aging so that the intended functions of the reactor vessel internal components covered by the scope of the TR will be maintained consistent with the current licensing basis during the period of extended operation.

1.2 Purpose and Applicability

The NRC staff reviewed the BWRVIP-76 TR and its Appendix K to determine whether its guidance will provide acceptable levels of quality for inspection and flaw evaluation of the subject safety-related reactor vessel internal (RVI) components during the period of extended operation. The review also considered compliance with the LR Rule in order to allow LR applicants the option of incorporating the BWRVIP-76 guidelines by reference in a plant-specific IPA and associated TLAAs.

Any BWRVIP member utility may reference this TR in an LRA to satisfy the requirements of: 1) 10 CFR 54.21(a)(3) for demonstrating that the effects of aging on the core shroud components within the scope of this TR will be adequately managed, and 2) 10 CFR 54.21(c)(1) for demonstrating the appropriate findings regarding the identification and evaluation of TLAAs for the core shroud for the period of extended operation. The NRC staff also concludes that, upon completion of the renewal applicant action items set forth in Section 4.1 below, referencing this TR in an LRA and summarizing in a final safety analysis report (FSAR) supplement, the aging management programs (AMPs) and the TLAA evaluations contained in this TR will provide the NRC staff with sufficient information to make the findings required by 10 CFR 54.29(a)(1) and (a)(2) for components within the scope of this TR.

2.0 SUMMARY

The BWRVIP-76 TR and its Appendix K contain a generic evaluation of the management of the effects on aging on the subject safety-related RVI components so that their intended functions will be maintained consistent with the CLB for the period of extended operation. This evaluation

applies to BWR applicants who have committed to implementing the BWRVIP-76 TR and want to incorporate the TR and Appendix K by reference into a plant-specific IPA and associated TLAAs.

The BWRVIP-76 TR addresses the following topics:

1) Introduction: It provides the objective for an acceptable regulated and unified industry approach for inspecting horizontal, vertical, and radial ring welds in repaired and unrepaired BWR core shrouds, and for inspecting repair components and anchorages in repaired shrouds. The TR also provides a brief background review of prior industry inspections of these welds.

2) Inspection Strategy for Welds in Unrepaired Shrouds: It provides inspection strategies and methods for horizontal welds in unrepaired core shrouds based on the category classification of the welds. It provides limitations addressing a required plant-specific evaluation. The TR also provides the inspection requirements and acceptance standards for vertical welds.

3) Inspection Strategy for Welds in Repaired Shrouds: It provides guidelines for recommended inspections of horizontal, vertical, and radial ring welds in repaired shrouds. This includes sampling of vertical welds and/or screening of horizontal welds. In addition, the TR provides the guidelines and suggested schedules for the inspection of the repaired components and the associated repair anchorages.

4) Reporting Requirements: It provides guidance for reporting results of inspections that do, or do not, meet the inspection and evaluation guidelines.

Appendix K of the BWRVIP-76 TR provides LR technical requirements for core shroud components which are discussed below:

Function of Core Shroud Assembly

According to the regulations at 10 CFR 54.4(a)(1)(ii) and (iii), the core shroud is required to ensure the capability to shutdown the reactor and maintain it in a safe shutdown condition and prevent or mitigate the consequences of accidents that could result in potential offsite exposure comparable to 10 CFR Part 100 guidelines. Therefore, the intended functions for the core shroud are to:

1) Provide a partition to separate the upward flow of the coolant through the core from the downward recirculation flow;

2) Maintain fuel alignment such that control rods can be inserted; and

3) Form part of the boundary to maintain water level in the core after a loss-of-coolant accident (LOCA). The intended functions are preserved under normal, upset, emergency, and faulted conditions. Appendix C.6 of the BWRVIP-76 TR identifies the safety factors that need to be considered to determine that stress levels for the various operating conditions are consistent with the CLB. The applied loads and load combinations are described in the BWRVIP-02 TR, "BWR Vessel Internals Project, BWR Core Shroud Repair Design Criteria."

Core Shroud Components Subject to Aging Management Review

Paragraph 54.21(a)(1) of the rule provides the requirements for identifying the core shroud components that are subject to AMR. To satisfy the requirements of paragraph 54.21(a)(1), the Nuclear Energy Institute (NEI) provided guidelines (Reference 1) to identify the passive and long-lived components. All components, including the core shroud head flange bolted connection, in the core shroud assembly are passive and long-lived; and therefore, the core shroud assembly is subject to AMR. The AMR of the core shroud head flange bolted connection, however, is included in the review of the top guide assembly.

Management of Aging Effects (54.21(a)(3))

a) Description of Aging Effects

The BWRVIP industry report (Reference 2) is used to identify the aging mechanisms for the core shroud materials. The NUREG-1557 (Reference 3) is used to establish the correlation between the aging effects and their associated aging mechanisms. Based on the previous industry experience, it was determined that crack initiation and growth due to stress corrosion cracking (SCC) is the only aging effect that requires aging management review for the core shroud. This conclusion is consistent with the scope and intent of the re-inspection guidelines. The causes of the SCC and a susceptibility assessment for the core shroud (including fabrication history, water chemistry, material carbon content, neutron fluence, and hot operating time) are provided in Appendix B.1 of the BWRVIP-76 TR. Based on the susceptibility considerations, the various BWR shrouds are placed in three categories. The categories consider the material specification (Type 304 or 304L), method of fabrication (welded plate rings or forged rings), and operating history relative to coolant conductivity. The categories are defined as follows:

[[

Category A:

Content Deleted -
EPRI Proprietary Information

]] TS

[[

Category B:

Content Deleted -
EPRI Proprietary Information

]] TS

volumetric and/or two-sided surface techniques to inspect 100% of the accessible regions.]

[[

Category C:

Content Deleted - EPRI Proprietary Information

]] TS

b) Assessment of Aging Effects and Programs

Inspection of Un-repaired Core Shrouds

The BWRVIP determined that the extent of inspection required for a given plant is determined based on three susceptibility factors which can be readily evaluated: hot operating time, conductivity and shroud material type, and fabrication features. The three categories (A, B, and C) were used in the shroud inspections and flaw evaluations. The inspection criteria for categories B or C will be used by the applicants to ensure structural integrity of the core shroud assembly during the LR period.

Section 3.0 of the BWRVIP-76 inspection guidelines addresses the inspection requirements for repaired core shroud welds. The BWRVIP recommends that inspections of repaired core shroud welds are necessary to provide periodic confirmation of the integrity of the repaired shroud during the LR period. The LR applicant is required to develop an inspection program incorporating the requirements of the inspection guidelines. In addition, the repair program shall consider vendor recommendations, industry experience, aging effects, and the critical components and features of the repair design.

c) Demonstration that the Effects of Aging are Adequately Managed

Based on the industry's experience it has been established that SCC is the only aging effect for the core shroud that requires AMR for LR. This aging effect will be managed by incorporating the inspection strategies described in Section 2.0 (un-repaired shrouds) and Section 3.0 (repaired shrouds) of the BWRVIP-76 TR, when appropriate, in the plant-specific inspection plans. To further demonstrate that SCC is adequately managed, the BWRVIP provides strategies that are based on current knowledge of the core shroud cracking issue and inspection

experience at various plants. It provides a staged approach with respect to the inspection effort and associated analyses that are logically expanded, as necessary, to confirm core shroud structural integrity. As more inspections are performed, specific aspects of implementing the inspection strategy may be further refined and incorporated in plant-specific inspection plans.

Implementation of the inspection strategy provided in the inspection guidelines of the BWRVIP-76 TR and the resulting plant-specific inspection plans during the LR period will provide a verification of core shroud structural integrity requirements. Therefore, there is reasonable assurance that SCC crack initiation and growth will be adequately managed so that the intended functions of the core shroud will be maintained consistent with the CLB in the LR period.

Time-Limited Aging Analyses

The regulation at 10 CFR 54.21(1)(c) requires that each application for LR contain an evaluation of TLAAs as defined in 10 CFR 54.3, and that the LR applicant shall demonstrate that:

i. The analyses remain valid for the period of extended operation;
ii. The analyses have been projected to the end of the period of extended operation; or
iii. The effects of aging on the intended function(s) will be adequately managed for the period of extended operation.

BWRVIP-76, Appendix K provides guidance to licensees regarding the identification of potential TLAAs, in their unit's CLB. The six criteria contained in the NEI industry guideline (Reference 1) were applied to define criteria that may be used to identify potential TLAAs. Specifically, calculations and analyses which involve:

1. the core shroud assembly,
2. a consideration of the effects of aging,
3. time-limited assumptions defined by the current operating term,
4. a determination relevant to a safety determination,
5. conclusions (or provide the basis for conclusions) related to the capability of the core shroud to perform its intended function, and
6. incorporation or reference of the calculation or analyses in the plant's CLB may be a TLAA.

If a plant-specific analysis identified by an LR applicant meets all six criteria above, then this analysis will be considered a TLAA for LR and evaluated by the LR applicant. The plant-specific analyses of the core shroud for fatigue will be reviewed by the LR applicant to determine if the TLAA criteria apply.

Determination of the inspection intervals for core shroud welds is based on the generic fracture mechanics analyses described in Appendix D of the BWRVIP-76 TR. The methodology and assumptions used in these analyses result in the following potential TLAA issues. The LR applicant may be required to evaluate these issues in a plant-specific analysis.

1) The length of time evaluated in the analyses.

2) Linear elastic fracture mechanics is required if specified fluence level threshold values are exceeded during the extended operating period.

3) The effects of BWR industry operating experience on the number of postulated flaws assumed in the analyses.

4) The applicable crack growth rates are shown to be greater than $5x10^{-5}$ in/hr.

Exemptions (54.21[c][2])

Exemptions associated with the core shroud that contain TLAA analysis issues will be identified and evaluated for LR by individual LR applicants.

TS Changes or Additions (54.22)

The BWRVIP stated that there are no generic changes or additions to TSs associated with the core shroud as a result of this aging management review to ensure that the effects of aging are adequately managed. Individual LR applicants will identify plant-specific changes.

Therefore, actions have been identified and have been or will be taken by utilities with BWR plants such that there is reasonable assurance that the activities authorized by LR for the core shroud will continue to be conducted in accordance with the CLB.

3.0 STAFF EVALUATION

The NRC staff reviewed TR BWRVIP-76, Appendix K, to determine if it demonstrates that the effects of aging on the core shroud components within the scope of the TR will be adequately managed so that the components' intended functions will be maintained consistent with the CLB for the period of extended operation in accordance with 10 CFR 54.21(a)(3). Besides the IPA, 10 CFR Part 54 requires an evaluation of TLAAs in accordance with 10 CFR 54.21(c). The NRC staff reviewed the TR BWRVIP-76, Appendix K, to determine if the TLAAs covered by the TR were evaluated for LR in accordance with 10 CFR 54.21(c)(1).

3.1 Structures and Components Subject to AMR

The NRC staff agrees that core shroud components are subject to AMR because they perform intended functions without moving parts or without a change in the configuration or properties. The NRC staff concludes that, to meet the applicable requirements of 10 CFR 54.21(a)(1), the BWR LR applicants must identify the appropriate safety-related core shroud components that are subject to AMR. The NRC staff also agrees with the BWRVIP's assessment regarding the intended function of the core shroud component which is addressed in Section 2.0 of this SE.

3.2 Effects of Aging

The information necessary to demonstrate compliance with the requirements of the LR Rule, 10 CFR 54.21 is provided in Appendix K of the BWRVIP-76 TR. The industry report (Reference 2) and the resolution to the NRC questions on this TR were used to identify the

aging mechanisms for the core shroud. If the industry report concluded that an aging mechanism is significant, then that aging mechanism was included in the AMR.

Using this methodology, it was determined that crack initiation and growth are the only aging effects that require AMR.

The NRC staff's position on identification of applicable aging effects requiring management for BWR core shroud and core shroud assembly components is given in Section 4.1 of this SE under License Renewal Action Items (6) and (7).

3.3 AMPs

The NRC staff evaluated the BWRVIP's AMP to determine if it contains the following 10 elements constituting an adequate AMP for LR.

1) Scope of Program: The program is focused on managing the effects of crack initiation and growth due to SCC. The program contains preventive measures to mitigate SCC; in-service inspection (ISI) to monitor the effects of SCC on the intended function of the components, and repair and/or replacement as needed to maintain the ability to perform the intended function.

2) Preventive Actions: Coolant water chemistry is monitored and maintained in accordance with EPRI guidelines. Maintaining high water purity reduces susceptibility to SCC. For those plants using hydrogen water chemistry or noble metal chemical addition (NMCA), hydrogen additions are effective in reducing electrochemical (corrosion) potentials in the recirculation piping system, but are less effective in the core region. NMCA, through a catalytic action, increases the effectiveness of hydrogen additions in the core region.

3) Parameters Monitored or Inspected: The AMP monitors the effects of SCC on the intended function by detection and sizing of cracks by ISI. Table IWB-2500 Category B-N-2 specifies visual VT-3 examination of all accessible surfaces of the core support structure. Inspection and flaw evaluation are performed in accordance with the BWRVIP-76 guidelines, which specifies ultrasonic or visual examinations (EVT-1), as approved by the NRC.

4) Detection of Aging Effects: Inspection in accordance with BWRVIP guidelines assures that degradation due to SCC is detected before any loss of the intended function of the core shroud components.

5) Monitoring and Trending: The inspection schedule is in accordance with applicable approved BWRVIP guidelines and is adequate for timely detection of cracks. Scope of examination expansion and re-inspection beyond the baseline inspection are required if flaws are detected.

6) Acceptance Criteria: Any degradation is evaluated in accordance with American Society of Mechanical Engineers (ASME Code) Boiler and Pressure Vessel Code, Section XI or other acceptable flaw evaluation criteria, such as the applicable NRC staff-approved BWRVIP-76 guidelines.

7) Corrective Actions: Repair and replacement procedures are equivalent to those requirements in the ASME Code, Section XI.

8) Confirmation Process and Administrative Controls: Site Quality Assurance (QA) confirmatory procedures, and review and approval processes are implemented in accordance with the requirements of Appendix B to 10 CFR Part 50.

9) Administrative Controls: Site QA administrative control processes are implemented in accordance with the requirements of Appendix B to 10 CFR Part 50.

10) Operating Experience: Cracking of the core shroud welds has been detected at several domestic and overseas BWRs. In July 1994, the NRC staff issued Generic Letter 94-03 (Reference 4) which required the applicant to inspect the core shroud welds. NUREG-1557 (Reference 3) is used to establish the correlation between the aging effects and their associated aging mechanisms.

In its SE for TR BWRVIP-76, the NRC staff concluded that the discussed inspection strategy and evaluation methodologies, as supplemented and modified, will provide an acceptable level of quality for examination of the core shroud components for the current operating period of BWRs. Further, based on the applicant's implementation of the BWRVIP-76 inspection program, as supplemented and modified, the NRC staff finds that there is reasonable assurance that crack initiation and growth will be adequately managed so that the intended functions of the core shroud components will be maintained consistent with the CLB for the period of extended operation.

Emerging Issues

Discovery of intergranular stress corrosion cracking (IGSCC) on the upper support location of the tie rod repair at Hatch Unit 1 during the unit's spring 2006 refueling outage suggests that the inspection criteria for the tie rod repair hardware for the extended period of operation should be re-evaluated. The BWRVIP re-evaluation should take into consideration the presence of any high stress region that exceeds the threshold limits for IGSCC in the tie rod repair hardware. In this context, in Request for Additional Information (RAI) 76(LR)-1, dated July 2, 2007 (ADAMS Accession No. ML071830529), the NRC staff requested that the BWRVIP address the presence of high stress region that exceeds the threshold limits for IGSCC in the tie rod repair hardware. In its response letter dated April 21, 2008, the BWRVIP stated that all applicants were directed to inspect their tie rod repairs during their next scheduled outage. Thus far, no additional cracking was found in the tie rod repairs. However, the BWRVIP stated that it will evaluate the implications of the Hatch, Unit 1, tie rod repair cracking, which may result in the incorporation of revised inspection recommendations for the tie rod repair hardware in the BWRVIP-76 TR. The NRC staff accepts this response and reiterates that the applicants should address the issue related to their tie rod repairs in their LRAs. Therefore, the NRC staff considers that its concern related to RAI 76(LR)-1 is resolved when the BWRVIP includes its response to this RAI in the approved version of Appendix K of TR BWRVIP-76.

Reduction in ductility and fracture toughness can occur in stainless steel RVI components when they are exposed to high energy neutrons (E > 1 MeV). Appendix C of TR BWRVIP-76 provides guidance to evaluate the structural integrity of core shroud horizontal welds affected by exposure to neutron radiation. In this appendix, the BWRVIP discusses the use of generic fracture mechanics analyses for establishing inspection intervals for the core shroud welds with

cracks. Previous data suggested that the fracture toughness values tend to decrease when stainless steel materials are exposed to high energy neutron fluence.

In August 2006, the BWRVIP issued a NRC staff-approved BWRVIP-100-A TR, "Updated Assessment of the Fracture Toughness of Irradiated Stainless Steel for BWR Core Shrouds," which discusses fracture toughness results for the irradiated stainless steel materials. In RAI 76(LR)-7, the NRC staff stated that for stainless steel materials with exposure to a neutron fluence value equal to or greater than 1 X 10^{21} n/cm^2 (E > 1 MeV), the BWRVIP-100-A TR identified lower fracture toughness value than that of the value reported in Appendix C of TR BWRVIP-76. During a LR period, core shroud welds, and base materials may be exposed to neutron fluence values of 1 X 10^{21} n/cm^2 (E > 1 MeV) or greater. Since the inspection frequency in the BWRVIP-76 TR is based on fracture toughness values which are not consistent with TR BWRVIP-100-A, the NRC staff requested that the BWRVIP reevaluate the inspection frequency and strategy that are specified in TR BWRVIP-76, Appendix C, Section 3.
The BWRVIP in its response to RAI 76(LR)-2 stated that at the time of issuance of TR BWRVIP-76, the methodology for determining crack growth rates in stainless steel materials with an exposure to a neutron fluence value equal to or greater than 1 X 10^{21} n/cm^2 (E > 1 MeV) was not established. However, since that time this methodology was reviewed and approved by the NRC staff in TR BWRVIP-99, "BWR Vessel and Internals Project, Crack Growth Rates in Irradiated BWR Stainless Steel Internal Components (ADAMS Accession No. ML052070126)" and in the BWRVIP-100-A TR (ADAMS Accession No. ML040650779). The BWRVIP stated that it will incorporate the crack growth rate evaluations, specified in the BWRVIP-99 and BWRVIP-100-A TRs, in TR BWRVIP-76, and will develop generic inspection intervals for core shroud welds that are exposed to a neutron fluence value equal to or greater than 1 X 10^{21} n/cm^2 (E > 1 MeV). Since the evaluations of crack growth rates in core shroud assembly were previously accepted by the NRC staff, the NRC accepts this response and considers that its concern related to RAI 76(LR)-2 is resolved. The applicants shall reference the NRC staff-approved BWRVIP-99 and BWRVIP-100-A TRs in their RVI components' AMP.

3.4 Time Limited Aging Analyses

Criteria developed in BWRVIP-76, Appendix K for identifying TLAAs associated with core shroud integrity calculations or analyses were discussed in Section 2.0 of this SE. The NRC staff has reviewed the guidance provided for identifying such TLAAs and has concluded that, if a plant-specific analysis meets all six criteria specified in Section 2.0 of this SE, the analysis will be considered a TLAA for LR and will need to be evaluated by the applicant on a plant-specific basis. Hence, the NRC staff approves of the framework given in BWRVIP-76, Appendix K for the identification of core shroud related TLAAs.

4.0 CONCLUSION

The NRC staff has reviewed Appendix K of TR BWRVIP-76 submitted by the BWRVIP. On the basis of its review, as set forth above, the NRC staff concludes that the Appendix K of BWRVIP-76 TR provides an acceptable demonstration that BWRVIP member utilities referencing this TR will adequately manage the aging effects of core shroud components within the scope of the TR, with the exception of the noted license renewal applicant action items set forth in Section 4.1 below, so that there is reasonable assurance that the core shroud components will perform their intended functions in accordance with the CLB during the period of extended operation.

Any BWRVIP member utility may reference this TR in an LRA to satisfy the requirements of:

1) Regulation 10 CFR 54.21(a)(3) for demonstrating that the effects of aging on the core shroud components within the scope of this TR will be adequately managed, and

2) Regulation 10 CFR 54.21(c)(1) for demonstrating the appropriate findings regarding the identification and evaluation of TLAAs for the core shroud for the period of extended operation.

The NRC staff also concludes that, upon completion of the renewal applicant action items set forth in Section 4.1 below, referencing this TR in an LRA and summarizing in a FSAR supplement, the AMPs and the TLAA evaluations contained in this TR will provide the NRC staff with sufficient information to make the findings required by Sections 54.29(a)(1) and (a)(2) for components within the scope of this TR.

4.1 LR Action Items

The following are LRA action items to be addressed in the plant-specific LRA when incorporating TR BWRVIP-76 in a renewal application:

1) The LRA is to commit to programs described as necessary in TR BWRVIP-76 to manage the effects of aging on the functionality of the core shroud assembly during the period of extended operation. LR applicants will be responsible for describing any such commitments and identifying how such commitments will be controlled. Any deviations from the AMPs within TR BWRVIP-76 described as necessary to manage the effects of aging during the period of extended operation and to maintain the functionality of the core shroud components or other information presented in the TR, such as materials of construction, must be identified by the renewal applicant and evaluated on a plant-specific basis in accordance with 10 CFR 54.21(a)(3) and (c)(1).

2) Regulation 10 CFR 54.21(d) requires that an FSAR supplement for the facility contain a summary description of the programs and activities for managing the effects of aging and the evaluation of TLAAs for the period of extended operation. Those LR applicants referencing the BWRVIP-76 TR for the core shroud must ensure that the programs and activities specified as necessary in the BWRVIP-76 TR are summarily described in the FSAR supplement.

3) Regulation 10 CFR 54.22 requires that each application for LR include any TS changes, and the justification for the changes, or additions necessary to manage the effects of aging during the period of extended operation as part of the renewal application. In Appendix K of TR BWRVIP-76, the BWRVIP stated that there are no generic changes or additions to TSs associated with the core shroud as a result of its AMR and that the LR applicant will provide the justification for plant-specific changes or additions. Those LR applicants referencing TR BWRVIP-76 for the core shroud must ensure that the inspection strategy described in TR BWRVIP-76 does not conflict with or result in any changes to their TSs. If TS changes do result, then the LR applicant must ensure that those changes are included in its application for LR.

4) The applicants shall reference the NRC staff approved TRs BWRVIP-14-A, BWRVIP-99 (when approved) and BWRVIP-100-A in their RVI components' AMP. The applicants shall make a statement in their LRAs that the crack growth rate evaluations and fracture

toughness values specified in these reports shall be used for cracked core shroud welds that are exposed to the neutron fluence values that are specified in these TRs. The applicants shall confirm that they will incorporate any emerging inspection guidelines developed by the BWRVIP for these welds.

5) LR applicants that have core shrouds with tie rod repairs shall make a statement in their AMPs associated with the RVI components that they have evaluated the implications of the Hatch Unit 1 tie rod repair cracking on their units and incorporated revised inspection guidelines, if any, developed by the BWRVIP.

6) The NRC staff's guidance in Table IV.B1 of the GALL Report lists two potentially applicable aging effects (i.e., in addition to cracking) for generic BWR reactor vessel internal components (including BWR core shroud and core shroud repair assembly components) that are made from either stainless steel (including CASS) or nickel alloy: (1) loss of material due to pitting and crevice corrosion (Refer to GALL AMR IV.B1-15), and (2) cumulative fatigue damage (Refer to GALL AMR Item IV.B1-14). BWR LR applicants will need to assess their designs to see if the generic guidelines for managing cumulative fatigue damage in GALL AMR item IV.B1-14 and for management loss of material due to pitting and crevice corrosion in GALL AMR IV.B1-15 are applicable to the design of their core shroud components (including welds) and any core shroud repair assembly components that have been installed through a design modification of the plant. If these aging affects are applicable to the design of these components as a result of exposing them to a reactor coolant with integrated neutron flux environment, applicants for license renewal will need to: (1) identify the aging effects as aging effects requiring management (AERM) for the core shrouds and for their core shroud repair assembly components if a repair design modification has been implemented, and (2) identify the specific aging management programs or time-limited aging analyses that will be used to manage these aging effects during the period of extended operation. Refer to License Renewal Applicant Action Item 7) for additional guidance on identifying the AERMs for core shroud components or core shroud repair assembly components that made from materials other than stainless steel (including CASS) or nickel alloy.

7) For BWR LRAs identification of AERMs for core shroud components or core shroud repair assembly components that are made from materials other than stainless steel (including CASS) or nickel alloy will need to be addressed on a plant specific basis that is consistent with the Note format criteria for plant-specific AMR items in latest NRC-approved version TR NEI-95-10.

8) LR applicants shall reference the NRC staff-approved topical reports BWRVIP-99 and BWRVIP-100-A in their RVI components' AMP, as discussed in section 3.3 of this SE.

5.0 REFERENCES

1. Nuclear Energy Institute Report, NEI 95-10, Revision 0, Industry Guideline for Implementing the Requirements of 10 CFR Part 54 the license renewal rule.

2. NUMARC 90-03, BWR Reactor Pressure Vessel Internals License Renewal Industry Report, Revision 1, June 1992

3. NUREG-1557, Summary of Technical Information and Agreements from Nuclear Management and Resources Council Industry Reports Addressing License Renewal, October 1996.

4. NRC Generic Letter 94-03, "Intergranular Stress Corrosion Cracking of Core Shrouds in Boiling Water Reactors," July 25, 1994.

Attachment: Resolution of Comments on Draft Safety Evaluation

Principal Contributors: J. Medoff, G. Cheruvenki

Date: August 24, 2009

RESOLUTION OF COMMENTS ON DRAFT SAFETY EVALUATION FOR ELECTRIC POWER RESEARCH INSTITUTE (EPRI)

BOILING WATER REACTOR (BWR) VESSEL AND INTERNALS PROJECT (BWRVIP) TOPICAL REPORT (TR) "BWR VESSEL AND INTERNALS PROJECT,

BWR CORE SHROUD INSPECTION AND FLAW EVALUATION GUIDELINES (BWRVIP-76) FOR LICENSE RENEWAL (LR) - APPENDIX C

PROJECT NO. 704

By letter dated December 9, 1999 (Agencywide Documents Access and Management System (ADAMS) Accession No. ML003690171), as supplemented by letters dated June 8, 2006 (ADAMS Accession No. ML061640186), and April 21, 2006 (ADAMS Accession No. ML061200093), the BWRVIP submitted for the U.S. Nuclear Regulatory Commission (NRC) staff review and approval the EPRI Proprietary Report TR-114232, "BWR Vessel and Internals Project, BWR Core Shroud Inspection and Flaw Evaluation Guidelines (BWRVIP-76)." The staff formally transmitted the draft SE by letter dated April 9, 2009 (ADAMS Accession No. ML083310076). The EPRI provided new comments to the draft Draft SE which contained clarifying information. The table below provides the disposition of these comments.

Comment No.	Location in NRC SE Page and Paragraph	Issue	BWRVIP Response	Staff Disposition
Comments from EPRI e-mail Dated April 24, 2009	Pages 4 and 5 of the draft safety evaluation by staff sent to them per email on April 9, 2009 (Accession No. ML083310076)	EPRI claims that the above information is a direct quote from the public version of the staff's final SE	By e-mail dated April 24, 2009, BWRVIP commented that information highlighted in yellow in the document "is a quote" in accordance with Title 10 of the Code of Federal Regulations, Section 2.390.	Staff accepts the BWRVIP comment and final SE amended as appropriate
Comment 1 Letter Date June 19, 2009	Page 10 lines 30 and 31	Fracture toughness value for BWRVIP-100-A	BWRVIP-100-A defines toughness values lower than the value in Appendix C of BWRVIP-76	Staff accepts the BWRVIP comment. Staff while approving BWRVIP-100-A by SE dated November 1, 2007 specifically stipulated that the approved fracture toughness values in section 2.0 of BWRVIP-100-A be replaced in Appendix C of the future revision of BWRVIP-76
Comment 2 Letter Date June 19, 2009	Page 10 lines 36 and 39	References to BWRVIP-99	Regarding crack growth rates, the draft SE references only BWRVIP-99, but not two other crack growth reports submitted under BWRVIP-99 and recently submitted to the NRC: BWRVIP-14-A and BWRVIP-99-A. BWRVIP-14-A (and its original predecessor BWRVIP-14) approved by the NRC) contains crack growth rates for the reactor vessel and	Staff accepts BWRVIP comments since the TRs BWRVIP-99-A and BWRVIP-14-A are currently under staff review. No change to staff SE is needed at this instance.

ATTACHMENT

			[illegible]	
Comment 3 Letter Date June 10, 2009	Page 10, lines 32-39	Fracture Toughness [illegible]	[illegible] The BWRVIP states [illegible] The BWRVIP response to the Request for Additional Information [illegible] states the following: "The BWRVIP intends to develop the development of generic inspection intervals for high fluence conditions." The response to the RAI further states: "However, since that time, BWRVIP-99 and BWRVIP-100-A have been issued and approved by NRC. Consequently, [illegible] to address the effects of fluence on crack growth and fracture toughness that exceed [illegible] BWRVIP-76. An analysis performed in these [illegible] will give a plant specific [illegible] inspection frequency. BWR utilities are required to follow the guidance when performing flaw evaluations." These BWRVIP recommendations continue to be the BWRVIP position for determining inspection intervals for stainless steel components exposed to high fluence conditions subject to the limitations specified in the BWRVIP review.	Staff rejects BWRVIP comments since the TRs BWRVIP-99-A and BWRVIP-14-A are currently under staff review. (see above)
Comment 4 Letter Date June 10, 2009	Page 11, line 34	Clarification requested by the BWRVIP TR	The line states: "The applicant is to verify that its plants [illegible] TR BWRVIP-76." [illegible] BWR plants have committed to BWRVIP-76 [illegible] the guidance in BWRVIP-76 unless they apply the NRC [illegible]. Furthermore, it is not known what "[illegible]" means. The BWRVIP suggests this sentence be deleted since the following sentence adequately covers the commitment requested of the renewal applicant.	Staff agrees with BWRVIP and accepts the comment. The SER is modified to incorporate the change as proposed by BWRVIP.
Comment 5 Letter Date June 10, 2009	Page 12, lines 14-19	Fracture Toughness, Crack growth rate and related fluence range	BWRVIP-14 and BWRVIP-99 [illegible] BWRVIP-14-A and Crack growth rate and BWRVIP-99-A address crack growth rates whereas BWRVIP-100 addresses fracture toughness. Furthermore,	Staff rejects BWRVIP comments since the TRs BWRVIP-99-A and BWRVIP-14-A are currently under

			crack growth rates in BWRVIP-99 and BWRVIP-96. Adjusted for consistency with a Paris exponent of 6 [illegible] 10^{-6} in/cycle to 2×10^{-6} in/cycle, not equal to or greater than 1×10^{-6} in/cycle 2 as stated in the SE. The BWRVIP-100-A report has inaccurate toughness values for several ranges of license values. The BWRVIP suggested that the wording be revised to state that the crack growth rates and fracture toughness values for stainless materials are for the license ranges as specified in the reports.	staff to clear. (see above). However, staff agrees with BWRVIP and encourages continued use of lower conservative values in future applications until these reports are fully approved.
Comment 5 Letter date June 19, 2000	Page 13 lines 10-11	Clarification: References to BWRVIP-99 and BWRVIP-100-A	Suggest adding BWRVIP-14-A and wording to include reference to the base NRC approved versions of BWRVIP-14-A, BWRVIP-99 and BWRVIP-100-A.	Staff agrees BWRVIP comments since the TRs BWRVIP-99-A and BWRVIP-14-A are currently under staff review. (see above).

CITATIONS

This report was prepared by

Electric Power Research Institute (EPRI)
3420 Hillview Avenue
Palo Alto, CA 94304

This report describes research sponsored by EPRI and its participating BWRVIP members.

The report is a corporate document that should be cited in the literature in the following manner:

BWRVIP-76NP-A: BWR Vessel and Internals Project, BWR Core Shroud Inspection and Flaw Evaluation Guidelines. EPRI, Palo Alto, CA: 2010. 1019057NP.

This report is based on the following previously published report:

BWR Vessel and Internals Project, BWR Core Shroud Inspection and Flaw Evaluation Guidelines (BWRVIP-76), EPRI Report TR-114232, 1999.

REPORT SUMMARY

The Boiling Water Reactor Vessel and Internals Project (BWRVIP), formed in June 1994, is an association of utilities focused exclusively on BWR vessel and internals issues. This BWRVIP report provides guidelines for inspecting and evaluating BWR core shrouds. A previous version of this report was published as BWRVIP-76 (TR-114232). This report (BWRVIP-76-A) incorporates changes proposed by the BWRVIP in response to U.S. Nuclear Regulatory Commission (NRC) Requests for Additional Information, recommendations in the NRC Safety Evaluation (SE) and other necessary revisions identified since the previous publication of the report. All changes except typographical errors are marked with margin bars. In accordance with a NRC request, the SE is included in the report and the report number includes an "A" indicating the version of the report accepted by the NRC staff.

Background
Core shroud cracking, first detected in 1990, has been found in a significant number of BWRs. As an initial response in 1994, the BWRVIP developed guidelines for inspecting circumferential welds (BWRVIP-01). Subsequently, additional guidelines were developed for re-inspecting circumferential welds (BWRVIP-07) and inspecting vertical welds (BWRVIP-63) in repaired and un-repaired shrouds. The recommendations in each guideline have been modified somewhat in the intervening years based on industry experience and evaluations performed by NRC.

Objective
To combine inspection recommendations in the three previously published guidelines into a single, comprehensive report.

Approach
A focus group was formed to oversee development of the new Guideline. Once an initial draft had been prepared, the focus group reviewed it to ensure that it was comprehensive, accurate, and straightforward to implement. Review comments were incorporated, and the Guideline was reviewed by a broader cross section of utility experts. Additional improvements were made based on this final review.

Results
The Guidelines represent an integrated approach to inspecting BWR core shrouds. Schedules and techniques are presented for inspecting circumferential welds, vertical welds, and ring segment welds in repaired and un-repaired shrouds. Guidance also is included for inspecting repair hardware in repaired shrouds. In addition, flaw evaluation methods are included for evaluating any degradation found during inspections.

EPRI Perspective

When implemented by utilities, the combined inspection recommendations in this Guideline will ensure that core shroud integrity is maintained with respect to all essential safety functions. The recommendations in this report supersede the previous recommendations in reports BWRVIP-01, BWRVIP-07, and BWRVIP-63.

Keywords

Boiling water reactor
Flaw evaluation
Inspection strategy
Core shroud
Stress corrosion cracking
Vessel and internals

RECORD OF REVISIONS

Revision Number	Revisions
BWRVIP-76	Original Report (TR-114232)
BWRVIP-76-A	The report as originally published (TR-114232) was revised to incorporate changes proposed by the BWRVIP in responses to NRC Requests for Additional Information, recommendations in the NRC Safety Evaluation (SE), and other necessary revisions identified since the last issuance of the report. All changes, except corrections to typographical errors, are marked with margin bars. In accordance with a NRC request, the SE is included in the report and the report number includes an "A" indicating the version of the report accepted by the NRC staff. A NRC Final Safety Evaluation accepting this report for referencing in license renewal applications is also included. Non-essential format changes were made to comply with the current EPRI publication guidelines. Details of the revision can be found in Appendix Q.

EXECUTIVE SUMMARY

Cracking has been detected in the vicinity of core shroud welds at several domestic and overseas boiling water reactors (BWRs). Visual (VT) and ultrasonic (UT) examinations of the shroud weld areas have detected indications in both horizontal and vertical welds.

In June 1994, the BWR Vessel and Internals Project (BWRVIP) was formed to address integrity issues arising from inservice degradation of core internals, including the core shroud. Since that time, the BWRVIP has published four reports which present guidelines for inspecting and evaluating core shroud integrity. Those reports are:

- "BWR Core Shroud Inspection and Flaw Evaluation Guidelines, Revision 2 (BWRVIP-01)," October 1996
- "Guidelines for Reinspection of BWR Core Shrouds (BWRVIP-07)," February 1996
- "Shroud Vertical Weld Inspection and Evaluation Guidelines (BWRVIP-63)," June 1999
- "BWRVIP-76: BWR Core Shroud Inspection and Flaw Evaluation Guidelines," November 1999

BWRVIP-76 combined the guidance of the first three reports listed above and, in addition, incorporated information from NRC reviews and safety evaluations. The report defined generic acceptance standards and inspection intervals for horizontal and vertical welds in repaired and un-repaired core shrouds, and procedures for determining plant specific inspection intervals when the generic acceptance standards are not applicable. It also included generic inspection intervals and acceptance standards for radial ring welds, repair hardware and repair anchorages in repaired core shrouds.

The report incorporated several changes to the initial three reports. The changes included:

- Increasing the inspection sample to 100% of accessible regions for all required Category B weld inspections (limited inspections to verify that sufficient uncracked weld exists to satisfy structural margins are not allowed),

- Eliminating the distinction between baseline inspection and reinspection requirements, and defining inspection strategies that can be used at any time for determining inspection intervals, and

- Condensing and simplifying the inspection strategies and evaluation procedures for horizontal and vertical welds in repaired and un-repaired core shrouds, and for radial ring welds in repaired core shrouds.

The current report, BWRVIP-76-A, incorporates changes required by the NRC safety evaluation of BWRVIP-76 and represents the NRC-approved version of the core shroud inspection guidelines.

CONTENTS

1 INTRODUCTION 1-1

1.1 Background 1-1

1.2 Objectives and Scope 1-4

1.3 Definitions and General Notes 1-5

1.4 Implementation Requirements 1-6

2 INSPECTION STRATEGY FOR WELDS IN UN-REPAIRED SHROUDS 2-1

2.1 Overview 2-1

2.2 Inspection Strategies for Horizontal Welds in Un-repaired Core Shrouds 2-1

2.2.1 Overview of Inspection Approach 2-2

2.2.2 Inspection Techniques 2-2

2.3 Inspection Strategy for Vertical Welds in Un-Repaired Category C Shrouds 2-3

2.3.1 Overview of Inspection Approach 2-3

2.3.2 Inspection Techniques 2-4

2.3.3 Inspection Strategy 2-5

2.3.3.1 Screening of Vertical Welds in Un-repaired Shrouds 2-5

2.3.3.2 Inspection Requirements for Vertical Welds 2-6

2.3.3.3 Acceptance Standards for Vertical Welds 2-7

3 INSPECTION STRATEGY FOR WELDS IN REPAIRED SHROUDS 3-1

3.1 Scope 3-1

3.2 Overview of Inspection Strategy for Repaired Shrouds 3-1

3.3 Vertical Welds in Repaired Shrouds 3-2

3.4 Inspection Strategy for Radial Ring Welds in Repaired Shrouds 3-3

3.5 Repair Component Inspections (Repair Assemblies and Other Components Added as Part of the Repair) 3-3

3.6 Repair Anchorage Inspections 3-4

4 REPORTING REQUIREMENTS 4-1

5 **REFERENCES** **5-1**

A **CORE SHROUD DESIGN** **A-1**
A.1 Design A-1
A.2 References A-2

B **CRACKING SUSCEPTIBILITY FACTORS AND CORE SHROUD CLASSIFICATION** **B-1**
B.1 Cracking Susceptibility Factors B-1
B.1.1 Fabrication History B-1
B.1.2 Neutron Fluence B-2
B.1.3 Water Chemistry B-2
B.1.4 Material Carbon Content B-2
B.1.5 Hot Operating Time B-3
B.1.6 Conclusion B-3
B.2 Core Shroud Categories B-3
B.3 References B-4

C **BASES FOR INSPECTION INTERVAL: HORIZONTAL WELDS** **C-1**
C.1 Introduction C-1
C.2 Overview Of Generic Analyses Performed C-2
C.3 Generic Evaluation Input and Assumptions C-2
C.3.1 Use of Faulted Loading Conditions. C-2
C.3.2 Core Shroud Integrity C-3
C.3.3 Material Strength and Shroud Geometry C-3
C.3.4 Crack Growth Rate and NDE Uncertainty C-4
C.3.5 Number, Extent and Distribution of Cracks and in the Core Shroud C-4
C.3.6 Summary of Input to Limit Load and LEFM Analyses C-7
C.4 Computational Results C-9
C.4.1 Results From Generic Limit Load Analyses C-9
C.4.2 Results From Generic LEFM Analyses C-9
C.4.3 Summary of Generic Limit Load and LEFM Analyses Results C-16
C.5 Generic Inspection Intervals C-19
C.6 References C-21

D **PLANT SPECIFIC EVALUATION PROCEDURE: HORIZONTAL WELDS** **D-1**
D.1 Fluence Levels and Fracture Mechanics Methods D-2

D.1.1 Approach to Evaluate High Fluence Welds D-4
D.2 Limit Load Method D-6
D.3 LEFM Method D-8
D.4 EPFM Methodology D-9
D.5 Safety Factors D-10
D.6 References D-10

_E_ ANALYTICAL BASIS FOR SCREENING AND ACCEPTANCE CRITERIA FOR VERTICAL WELDS E-1
E.1 Case A: Allowable Through-Wall Flaw in Vertical Weld (Through-Wall Crack in Horizontal Weld over Entire Length) E-2
E.1.1 LEFM Analysis E-3
E.1.2 Limit Load Analysis E-3
E.1.3 Results E-3
E.2 Case B: Allowable Through-Wall Flaw in Horizontal Weld (Through-Wall Crack in Vertical Weld over Entire Length) E-4
E.2.1 LEFM Analysis E-5
E.2.2 Limit Load Analysis E-5
E.2.3 Results E-5
E.3 Case C: Allowable Part Through-Wall Flaw in Vertical Weld (Through-Wall Crack in Horizontal Weld over Entire Length) E-5
E.3.1 LEFM Analysis E-6
E.3.2 Limit Load Analysis E-6
E.3.3 Results E-6
E.4 Case D: Allowable Part Through-Wall Flaw in Circumferential Weld (Through-Wall Crack in Vertical Weld over Entire Length) E-7
E.4.1 LEFM Analysis E-7
E.4.2 Limit Load Analysis E-8
E.4.3 Results E-8
E.5 References E-9

_F_ EVALUATION OF VERTICAL WELD INDICATIONS F-1
F.1 Vertical Weld Cracks that Do Not Intersect Circumferential Welds F-2
F.1.1 LEFM Analysis F-3
F.1.2 Limit Load Analysis F-3
F.2 Vertical Weld Cracks that Intersect Circumferential Welds F-4

F.2.1 360 Degree Through-Wall Flaw in Intersecting Circumferential Weld; Part Through-Wall Flaw in Vertical Weld F-4
F.2.1.1 LEFM Analysis F-4
F.2.1.2 Limit Load Analysis F-5
F.2.2 360 Degree Part Through-Wall Flaw in Circumferential Weld; Through-Wall Flaw in Intersecting Vertical Weld F-7
F.2.2.1 LEFM Analysis F-7
F.2.2.2 Limit Load Analysis F-8
F.3 Leakage F-8
F.4 Flaw Evaluation Assumptions for Cracking in Uninspected Regions F-11
F.5 Conclusions F-12
F.6 Plant Specific Flaw Evaluation Methodology F-12
F.7 References F-14

G PROXIMITY RULES FOR PLANT-SPECIFIC FLAW EVALUATION G-1
G.1 Determination of the Effective Flaw Length G-1
G.2 Proximity Rules G-1
Case B: Circumferential Flaw - Axial Flaw G-3
G.3 Application of Effective Flaw Length Criteria G-3

H A STATISTICAL METHOD FOR ESTIMATING THE CRACKING IN INACCESSIBLE REGIONS OF CORE SHROUD WELDS H-1
H.1 Introduction H-1
H.2 Methodology H-2
H.2.1 Assumptions H-2
H.2.2 Example H-3
H.3 Results of Analyses for Core Shroud Welds H-3
H.4 Example Problem H-4

I CALCULATION OF AVERAGE CRACK DEPTH I-1

J USE OF FILLET WELD FOR ESTABLISHING ALLOWABLE FLAW DEPTH J-1
J.1 Issue J-1
J.2 Crack-Free Fillet Weld Confirmation J-1

K GUIDELINES FOR INSPECTION OF BWR CORE SHROUDS: DEMONSTRATION OF COMPLIANCE WITH THE TECHNICAL INFORMATION REQUIREMENTS OF THE LICENSE RENEWAL RULE (10 CFR 54.21) K-1

K.1 Description of the BWR Core Shroud and Intended Functions K-1
K.2 Core Shroud Components Subject to Aging Management Review K-2
K.3 Management of Aging Effects (54.21[a][3]) K-2
K.4 Time Limited Aging Analyses (54.21[c][1]) K-4
K.5 Exemptions (54.21[c][2]) K-5
K.6 Technical Specification Changes or Additions (54.22) K-5
K.7 Demonstration that Activities will Continue to be Conducted in Accordance with the CLB (54.29[a]) K-5
K.8 References K-5

_L_ NRC REQUEST FOR ADDITIONAL INFORMATION L-1

_M_ NRC SUPPLEMENTAL REQUEST FOR ADDITIONAL INFORMATION M-1

_N_ BWRVIP RESPONSE TO NRC REQUEST FOR ADDITIONAL INFORMATION N-1

_O_ NRC SECOND SUPPLEMENTAL REQUEST FOR ADDITIONAL INFORMATION O-1

_P_ BWRVIP RESPONSE TO SECOND SUPPLEMENTAL RAI P-1

_Q_ RECORD OF REVISONS Q-1

LIST OF FIGURES

Figure 1-1 Typical BWR Core Shroud 1-6
Figure 2-1 Core Shroud Classification, and Vertical and Horizontal Weld Inspection Programs for Un-repaired BWR Core Shrouds 2-8
Figure 2-2 Inspection and Inspection Interval for Horizontal Welds in Un-repaired Category B Core Shrouds 2-9
Figure 2-3 Inspection and Inspection Interval for Horizontal Welds in Un-repaired Category C Core Shrouds 2-10
Figure 2-4 Procedure for Screening Horizontal Welds to Define the Inspection Scope for Vertical Welds in Category C Un-repaired Shrouds 2-11
Figure 2-5 Acceptance Standards and Inspection Interval for Inspection of Vertical Welds in Category C Un-repaired Shrouds 2-12
Figure 3-1 Overview of Inspection Requirements for Horizontal and Vertical Welds in Repaired Core Shrouds 3-5
Figure 3-2 Inspection Strategy Options for Vertical Welds in Repaired Shrouds 3-6
Figure 3-3 Acceptance Standards and Inspection Intervals for Inspection of Vertical Welds in Repaired Shrouds 3-7
Figure B-1 Extent of Cracking versus Mean Conductivity for the First 5 Cycles B-5
Figure B-2 Extent of Cracking versus On-line Years B-6
Figure C-1 Results of Limit Load Evaluation for 1 ksi Stress Level C-10
Figure C-2 Results of Limit Load Evaluation for 3 ksi Stress Level C-11
Figure C-3 Results of Limit Load Evaluation for 6 ksi Stress Level C-12
Figure C-4 Results of LEFM Evaluation for 1 ksi Stress Level C-14
Figure C-5 Results of LEFM Evaluation for 3 ksi Stress Level C-15
Figure C-6 Results of LEFM Evaluation for 6 ksi Stress Level C-16
Figure D-1 Azimuthal Fluence Profile at Shroud Inner Radius at the Axial Midplane D-5
Figure D-2 Axial Fluence Profile at Shroud Inner Radius at Maximum Azimuthal Position D-6
Figure D-3 Schematic of Non-Symmetric Ligament Distribution D-12
Figure D-4 J-R Curves for Two Irradiated Stainless Steel Specimens at Fluence of $8x10^{20}$ n/cm^2 ..... D-13
Figure D-5 Curvature Correction Factor G_m for Circumferential Flaw D-14
Figure D-6 Solution for Equi-Distant Equi-Length Flaws D-15
Figure D-7 Schematic of (J/T) Approach D-16
Figure D-8 Shroud Weld with 360° Crack D-17

Figure E-1 Case A E-2
Figure E-2 Case B E-4
Figure E-3 Case C E-6
Figure E-4 Case D E-7
Figure F-1 Vertical Weld Cracks that Do Not Intersect Circumferential Welds F-2
Figure F-2 360 Degree Through-Wall Flaw in Intersecting Circumferential Weld; Part Through-Wall Flaw in Vertical Weld F-4
Figure F-3 Compound Crack F-6
Figure F-4 360 Degree Part Through-Wall Flaw in Circumferential Weld; Through-Wall Flaw in Intersecting Vertical Weld F-7
Figure F-5 Leak Rate vs. Axial Crack Length F-10
Figure G-1 ASME Code Proximity Criteria G-4
Figure G-2 Application of Proximity Procedure to Neighboring Circumferential Flaws G-5
Figure G-3 Application of Proximity Procedure to Neighboring Axial and Circumferential Flaws G-6
Figure G-4 Process for Determining Effective Circumferential Flaw Length G-7
Figure H-1 Typical BWR Core Shroud H-5
Figure H-2 Example Excel Spreadsheet Calculation H-6
Figure H-3 Defect Rate in Inaccessible Region vs. Length of Inaccessible Region as a Function of Defect Rate in Inspected Region H-7
Figure H-4 Typical Core Shroud Weld H5 ..... H-8
Figure J-1 Schematic of Anticipated Crack Growth in Shroud Ring J-3

LIST OF TABLES

Table 2-1 Core Shroud Inspection Intervals for Category B and C Plants in years (time above 0°F 2-13
Table C-1 Defect Rates in Inaccessible Regions of Core Shroud Welds C-5
Table C-2 Crack Length Assumptions Used to Determine Reinspection Intervals C-6
Table C-3 Geometry and Stress Data C-7
Table C-4 Parameters Used C-8
Table C-5 LEFM Results for Different Flaw Distributions C-13
Table C-6 Analysis Results for 1 ksi Stress Level[4] C-17
Table C-7 Analysis Results for 3 ksi Stress Level[4] C-18
Table C-8 Analysis Results for 6 ksi Stress Level[4] C-19
Table C-9 Core Shroud Inspection Intervals for Category B and C Plants (in years) [(7)] C-20
Table D-1 Conservatisms Included in Flaw Evaluation Methodology D-18
Table F-1 Defect Rates in Uninspected Regions of Core Shroud Vertical Welds F-11
Table G-1 Flaw Combinations Considered in Proximity Criteria G-2
Table H-1 Defect Rates in Inaccessible Regions of Core Shroud Welds H-4
Table Q-1 Revision Details Q-3

1
INTRODUCTION

BWRVIP-76 [23], first published in 1999, presented inspection requirements and evaluation procedures for cracking that may occur in repaired and un-repaired core shrouds of boiling water reactors (BWR). The report combined the guidance in three previously published BWRVIP Guidelines:

- "BWR Core Shroud Inspection and Flaw Evaluation Guidelines, Revision 2 (BWRVIP-01)," October 1996 [1]
- "Guidelines for Reinspection of BWR Core Shrouds (BWRVIP-07)," February 1996 [2]
- "Shroud Vertical Weld Inspection and Evaluation Guidelines, (BWRVIP-63)," June 1999 [3]

The report also incorporates information from NRC requests for additional information and safety evaluations related to BWRVIP-07 [4-6]. This revision to the report (BWRVIP-76-A) also incorporates comments from the NRC review of BWRVIP-76 and represents the NRC-approved version of the core shroud inspection guidelines.

The remainder of this section presents background information and the objectives and scope of the report, including a summary of changes compared to previous versions of the reports. Sections 2 and 3 present overviews of the inspection strategies and evaluation procedures for welds in un-repaired and repaired shrouds, respectively. Flaw evaluation methods, as well as the bases for the inspection guidelines, are described in appendices.

Appendix A contains the core shroud design features, while Appendix B summarizes the classification of the susceptibility of the core shroud to inservice cracking. Appendix C provides the bases for determining generic inspection intervals for horizontal welds in repaired and un-repaired shrouds. Appendix D provides evaluation procedures that can be used to define a plant specific inspection interval for horizontal welds when the generic criteria are not applicable. The bases for the generic acceptance standards and inspection intervals applicable to vertical welds are presented in Appendix E and the weld/plant specific inspection interval evaluation procedure for vertical welds is summarized in Appendix F. Appendices G, H, I and J provide additional information related to flaw evaluations. Demonstration of compliance with the License Renewal Rule is included in Appendix K. Appendices L and M contain relevant NRC safety evaluations.

1.1 Background

BWRs designated BWR/2 through BWR/6 were designed with a cylindrical core shroud as illustrated in Figure 1-1. The shroud directs coolant flow through the core, helps maintain fuel alignment to ensure the control rods can be inserted into the core, and, with the exception of BWR/2s, forms part of the boundary that maintains coolant level in the core following a loss of coolant accident. The core shroud design and fabrication are summarized in Appendix A.

Core shroud cracking was first discovered in an overseas BWR in 1990. Subsequently, visual (VT) and ultrasonic (UT) examination techniques have detected cracking in core shrouds in a number of domestic and overseas BWRs. Crack indications have been found in heat affected zones of both horizontal and vertical welds. The predominant form of cracking is circumferentially oriented indications located in the heat-affected zones of horizontal welds. Limited cracking has also been observed in vertical welds.

The majority of the cracking has been identified as intergranular stress corrosion cracking (IGSCC). Irradiation assisted stress corrosion cracking (IASCC) has also been observed in the core beltline region (weld H4, see Fig. 1-1). The shrouds are fabricated using either Type 304 or Type 304L austenitic stainless steel, and cracking has been detected in core shrouds fabricated from either material.

Initially, BWR owners were apprised of the cracking through GE SILs and RICSILs and NRC Information Notices [7-11]. As a result of an increased number of detected shroud cracks, the BWR Owners' Group (BWROG) in April 1994 published a report entitled "BWR Core Shroud Evaluation" [12]. This report provided a conservative, generic screening methodology to evaluate core shroud flaw indications on a plant-specific basis.

In June 1994, executives from domestic BWR owners formed the BWR Vessel and Internals Project (BWRVIP) to address integrity issues arising from inservice degradation of core internals, including the core shroud.

In July 1994, the NRC issued Generic Letter (GL) 94-03 [13], which required all BWR licensees to inspect their core shrouds at the next scheduled refueling outage. A plant-specific safety evaluation also was required to support continued operation of the plant until the inspections could be performed.

In response to GL 94-03, flaw acceptance criteria for horizontal welds in un-repaired shrouds were submitted to NRC in reports "BWR Core Shroud Inspection and Flaw Evaluation Guidelines," September 2, 1994 [14], and "BWR Core Shroud Inspection and Flaw Evaluation Guidelines," Rev. 1, March, 1995 [15]. These guidelines grouped core shrouds into three categories (A, B, or C) based on the expected susceptibility to cracking. The basis for defining the core shroud categories is summarized in Appendix B.

Welds in Category A core shrouds (those judged unlikely to experience cracking) were exempted from inspection. For Category B shrouds (those judged mildly susceptible to cracking), a sample of horizontal welds (H3, H4, H5 and H7) were required to be inspected. For Category C shrouds (those judged to have potential for significant cracking), all horizontal welds (H1 through H7, inclusive) were required to be inspected. The inspection scope for each weld in Category B and C core shrouds was to cover sufficient weld length to ensure adequate structural integrity.

The results of the NRC review of these documents were presented in Safety Evaluation Reports issued on December 28, 1994 [16] and June 16, 1995 [17], respectively. During this time several BWR owners implemented repairs to the core shrouds.

On February 29, 1996 the BWRVIP submitted to the NRC "Guidelines for Reinspection of BWR Core Shrouds (BWRVIP-07) [2]. The purpose of this report was to provide a uniform industry approach to reinspection that would ensure the structural and functional integrity of repaired or un-repaired core shrouds. The NRC reviewed this report, and requested additional information [4, 5]. Responses to the NRC requests for information were provided on October 21, 1996 [18] and November 26, 1997 [19]. Based on these responses, the NRC, on April 27, 1998 [6], issued Supplement 1 to the Safety Evaluation "Guidelines for Reinspection of BWR Core Shrouds (BWRVIP-07). The safety evaluation accepted the industry inspection strategy and evaluation procedure, subject to some industry actions. Finally, on November 7, 1999 the NRC issued errata [22] which affects reinspection requirements.

A significant change made to the inspection guidance as a result of the NRC review of BWRVIP-07 relates to the amount of weld that requires inspection. BWRVIP-07 required only that inspections include a sufficient length of weld such that the amount of uncracked weld at the next inspection would provide structural integrity for the shroud. Guidance in BWRVIP-76 requires that "all accessible" portions of the weld be inspected.

In 1999, the industry completed the report "Shroud Vertical Weld Inspection and Evaluation Guidelines (BWRVIP-63)" [3]. The report described the inspection strategy and acceptance criteria for vertical welds in un-repaired and repaired core shrouds. It also included the technical basis for the acceptance standards and provided weld-specific evaluation procedures for conditions where the acceptance standards could not be met.

BWRVIP-76 was published in 1999 and combined the guidance in BWRVIP-01, BWRVIP-07 and BWRVIP-63. The current report, BWRVIP-76-A, revises BWRVIP-76 to incorporate information from the NRC safety evaluation of BWRVIP-76.

Utilities have been inspecting shroud welds in accordance with BWRVIP-76 since its publication in 1999. All plants have performed baseline inspections and most have performed at least one reinspection. The majority of plants have found some cracking on horizontal welds and a few have found cracking on vertical welds. In several cases, the cracking was significant enough to warrant installation of a repair.

Plants with repaired shrouds have also inspected the repair hardware on a periodic basis. For the most part, these inspections have not indicated significant degradation in the tie-rod hardware. A notable exception, however, is a crack discovered in 2005 in an upper support bracket fabricated from X-750. The root cause of the cracking was determined to be related to a design deficiency and actions were taken to ensure that similar cracking does not occur at other plants. No change to the published inspection guidance was deemed necessary.

The inspection approach described in the BWRVIP-76 guidelines has successfully managed shroud degradation for over a decade.

1.2 Objectives and Scope

The objective of this report is to provide a regulatory accepted, unified industry approach for inspecting horizontal, vertical and radial ring welds in repaired and un-repaired BWR core shrouds, and repair components and anchorage in repaired shrouds. This approach will ensure that the structural and functional integrity of the core shroud is maintained, while the impact of core shroud inspections on plant outage schedules and plant resources is minimized.

The unified approach described in this report includes:

- Generic classification of core shrouds according to the potential susceptibility to IGSCC based on years of hot operation, core shroud material, and mean coolant conductivity during the first five cycles of operation,
- Simplified guidelines for inspection of horizontal, vertical and radial ring welds in repaired and un-repaired shrouds, and repair hardware in repaired core shrouds,
- Generic definition of inspection location based on the shroud classification,
- Generic definition of inspection interval based on the shroud classification and inspection results,
- 100% inspection of accessible regions for all required weld inspections,
- Definition of plant specific evaluation procedures for determining inspection intervals based on inspection results, and
- Change in shroud classification based on hot operating time or inspection results.

The inspection guidelines are provided in Sections 2 and 3 for welds in un-repaired and repaired core shrouds, respectively. As indicated in these sections plant-specific analyses can be performed for a given weld or for the entire core shroud based upon specific metallurgical, operational or fabrication data. General guidelines for these analyses are provided in Appendices D and F of this document for horizontal and vertical welds, respectively.

The inspection criteria provided in this document are intended to allow all BWR utilities to develop appropriate and conservative plant specific inspection plans. The Assessment Committee plans to monitor the results of all core shroud inspections so that new information obtained from these inspections can be factored into subsequent revisions of this document, as appropriate.

The recommendations in this Guideline provide inspections necessary to ensure shroud intergrity for continued safety and replace the inspection recommendations of GE SILS. However, SILS may contain other information relative to operational performance and field experience that may assist licensees with investment protection, cost management and optimization of operational performance. Each Licensee should review the current SILS, and stay cognizant of any future changes, for information that may affect reactor operation or performance.

1.3 Definitions and General Notes

Following is an explanation of some of the terminology used in this report.

Surface techniques: Surface techniques are inspection techniques that interrogate only the surface of a material and provide no information regarding the depth of observed cracking. For the purpose of shroud exams, these techniques are practically limited to eddy current (ET). Surface techniques do not include visual exams.

Two-sided exam: When used with respect to a visual or eddy current exam, the words "two-sided" refer to an inspection that interrogates both the ID and OD of the shroud. When used with respect to a UT exam, the words refer to inspection of both the upper and lower (or right and left) sides of a weld conducted from either the ID or OD of the shroud. These guidelines typically require two-sided inspections. In some cases, two sided visual exams or volumetric exams will be extremely difficult or impossible due to access limitations. In such a situation, a one-sided visual exam is sometimes allowed. Disassembly of reactor components is not considered necessary or appropriate in order to obtain access to both sides of a weld. However, fuel should be removed as necessary if such action provides access to the ID for inspection of these welds.

Average crack depth: Average crack depth is calculated in two different ways in this report. One method is used for calculating the average depth of an observed crack for the purposes of assigning an amount of assumed cracking in an uninspected region (see, for example, Appendix D). A second definition of average crack depth is used for the purposes of evaluating whether a weld satisfies certain general acceptance criteria (see, for example, Sections 2.3.3). The difference between the two methods relates to the length of weld over which the average is calculated.

Accessible length: For many welds, this guideline requires that "all accessible" portions of the weld be examined. The intent is that the inspection should not be limited to an inspection of only a sufficient length of weld to confirm adequate structural integrity. Rather, a conscientious effort should be made to determine the condition of the entire weld by inspecting as much of the weld as possible given practical limits based on interferences experienced by the selected inspection tooling. It is not necessary to supplement the selected exam type with other techniques in order to obtain additional coverage although, in some cases, such action may result in a longer reinspection interval.

Repaired shroud: A "repaired" shroud refers to a shroud in which one or more horizontal or vertical weld(s) has been structurally replaced.

End of Interval (EOI): The EOI (or reinspection interval) is the time at which a particular weld needs to be reinspected based on the generic acceptance criteria in this report or on a plant specific evaluation._Note: The EOI determined by either generic acceptance criteria or by plant specific evaluations may be exceeded by a maximum of 3 months in order to coincide with a plant outage.

1.4 Implementation Requirements

In accordance with the implementation requirements of Nuclear Energy Institute (NEI) 03-08, Guideline for the Management of Materials Issues, the inspection recommendations in Sections 2 and 3 of this report, the reporting requirements in Section 4 and the flaw evaluation procedures referenced in those sections are considered to be "needed." The remainder of the report is provided for information.

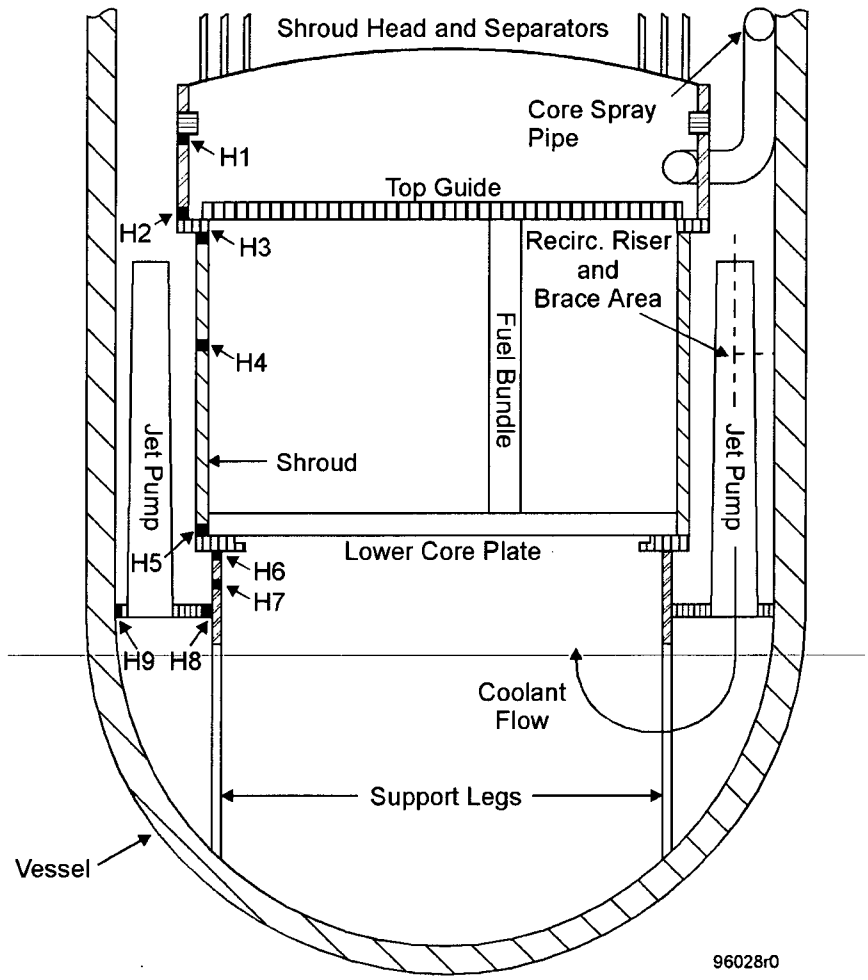

Figure 1-1
Typical BWR Core Shroud

2
INSPECTION STRATEGY FOR WELDS IN UN-REPAIRED SHROUDS

2.1 Overview

This section presents inspection and evaluation strategies for horizontal and vertical welds in un-repaired core shrouds. The inspection strategy makes no distinction between baseline inspection and reinspection. The inspection scope, procedures and interval, and the evaluation procedures are the same regardless of the time at which the inspection was or will be performed.

The inspection strategy for un-repaired shrouds depends on the material, coolant conductivity, and operating time used to define the shroud categories identified in Appendix B. A summary of the shroud categories and an overview of the associated inspection requirements are presented in Figure 2-1.

[[

Content Deleted -
EPRI Proprietary Information

]] TS

2.2 Inspection Strategies for Horizontal Welds in Un-repaired Core Shrouds

Figures 2-2 and 2-3 present the inspection strategy for horizontal welds in Category B and C shrouds, respectively. Either the generic acceptance standards in Figures 2-2 and 2-3 or a weld/plant specific evaluation procedure can be used to define the inspection interval as identified in the figures. The bases for the generic acceptance standards and inspection intervals are presented in Appendix C, while the plant specific evaluation procedure is described in Appendix D.

2.2.1 Overview of Inspection Approach

[[

Content Deleted -
EPRI Proprietary Information

]] TS

2.2.2 Inspection Techniques

[[

Content Deleted -
EPRI Proprietary Information

]] TS

[[

Content Deleted -
EPRI Proprietary Information

]] TS

2.3 Inspection Strategy for Vertical Welds in Un-Repaired Category C Shrouds

2.3.1 Overview of Inspection Approach

[[

Content Deleted -
EPRI Proprietary Information

]] TS

[[

Content Deleted -
EPRI Proprietary Information

]] TS

2.3.2 Inspection Techniques

[[

Content Deleted -
EPRI Proprietary Information

]] TS

2.3.3 Inspection Strategy

This section presents the inspection strategies for vertical welds in Category C un-repaired BWR core shrouds.The inspection strategies are discussed below and are summarized in Figures 2-4 and 2-5. These strategies are applicable to vertical welds lying between horizontal welds H1 and H7.

[[

Content Deleted -
EPRI Proprietary Information

]] TS

2.3.3.1 Screening of Vertical Welds in Un-repaired Shrouds

Structural evaluations have determined that shroud integrity can be demonstrated in the presence of vertical weld cracking, given that cracking in intersecting horizontal welds is not significant. Consequently, the inspection of vertical welds in un-repaired shrouds is applicable only to Category C shrouds, which are shrouds where significant cracking either is anticipated or has been detected. In this instance, the vertical welds that are to be inspected

are determined by a screening of the cracking detected in horizontal welds located at each end of the vertical weld.

[[

Content Deleted -
EPRI Proprietary Information

]] TS

2.3.3.2 Inspection Requirements for Vertical Welds

[[

Content Deleted -
EPRI Proprietary Information

]] TS

2.3.3.3 Acceptance Standards for Vertical Welds

[[

Content Deleted -
EPRI Proprietary Information

]] TS

[[

Content Deleted -
EPRI Proprietary Information

]] TS

Figure 2-1
Core Shroud Classification, and Vertical and Horizontal Weld Inspection Programs for Un-repaired BWR Core Shrouds

[[

Content Deleted -
EPRI Proprietary Information

]] TS

Figure 2-2
Inspection and Inspection Interval for Horizontal Welds in Un-repaired Category B Core Shrouds

[[

Content Deleted -
EPRI Proprietary Information

]] TS

Figure 2-3
Inspection and Inspection Interval for Horizontal Welds in Un-repaired Category C Core Shrouds

[[

Content Deleted -
EPRI Proprietary Information

]] TS

Figure 2-4
Procedure for Screening Horizontal Welds to Define the Inspection Scope for Vertical Welds in Category C Un-repaired Shrouds

[[

Content Deleted -
EPRI Proprietary Information

]] TS

Figure 2-5
Acceptance Standards and Inspection Interval for Inspection of Vertical Welds in Category C Un-repaired Shrouds

Table 2-1
Core Shroud Inspection Intervals for Category B and C Plants in years (time above 0°F

[[

Content Deleted -
EPRI Proprietary Information

]] TS

3
INSPECTION STRATEGY FOR WELDS IN REPAIRED SHROUDS

3.1 Scope

This section presents inspection and evaluation strategies for horizontal and vertical welds, radial ring welds, and repair components and anchorage in repaired shrouds. The inspection strategy described here makes no distinction between baseline inspection and reinspection. The inspection scope, procedures and interval, and the evaluation procedures are the same regardless of the time at which the inspection was or will be performed.

Inspection of repaired core shrouds is intended to provide confirmation of the continued integrity of the repaired shroud. The inspection requirements in this section are applicable to shroud repairs that meet the BWRVIP Shroud Repair Design Criteria [20], with any exceptions to those criteria specifically approved by NRC as provided for in that document.

[[

Content Deleted -
EPRI Proprietary Information

]] TS

3.2 Overview of Inspection Strategy for Repaired Shrouds

An overview of the inspection strategy for horizontal and vertical welds in repaired shrouds is presented in Figure 3-1. [[

Content Deleted -
EPRI Proprietary Information

]] TS

3.3 Vertical Welds in Repaired Shrouds

The inspection requirements for vertical welds in repaired shrouds are discussed below and are shown in Figures 3-2 and 3-3. The guidance presented in Section 2.3.3 for the calculation of EOI for un-repaired shrouds is also applicable to repaired shrouds. Any vertical weld that intersects a repaired horizontal weld will be evaluated as described below.

[[

Content Deleted -
EPRI Proprietary Information

]] TS

[[

Content Deleted -
EPRI Proprietary Information

]] TS

3.4 Inspection Strategy for Radial Ring Welds in Repaired Shrouds

For repaired shrouds, inspection of certain ring welds may be required because the rings may provide structural stiffness and/or lateral load carrying capability. [[

Content Deleted -
EPRI Proprietary Information

]] TS

3.5 Repair Component Inspections (Repair Assemblies and Other Components Added as Part of the Repair)

Inspection requirements sufficient to ensure the continued integrity of the repaired shroud shall be developed by the utility. The development of these requirements shall consider as a minimum the generic guidance in this report and plant specific recommendations obtained from the repair designer.

[[

Content Deleted -
EPRI Proprietary Information

[[

Content Deleted -
EPRI Proprietary Information

]] TS

3.6 Repair Anchorage Inspections

[[

Content Deleted -
EPRI Proprietary Information

]] TS

[[

Content Deleted -
EPRI Proprietary Information

]] TS

Figure 3-1
Overview of Inspection Requirements for Horizontal and Vertical Welds in Repaired Core Shrouds

[[

Content Deleted -
EPRI Proprietary Information

]] TS

Figure 3-2
Inspection Strategy Options for Vertical Welds in Repaired Shrouds

[[

Content Deleted -
EPRI Proprietary Information

]] TS

Figure 3-3
Acceptance Standards and Inspection Intervals for Inspection of Vertical Welds in Repaired Shrouds

4
REPORTING REQUIREMENTS

Reporting of inspection requirements, flaw evaluations, etc. shall be in accordance with BWRVIP procedures as described in the most recent version of BWRVIP-94 [24].

[[

Content Deleted -
EPRI Proprietary Information

]] TS

5
REFERENCES

1. "BWR Core Shroud Inspection and Flaw Evaluation Guidelines, Revision 2 (BWRVIP-01)," EPRI Report TR-107079, October 1996.

2. "Guidelines for Reinspection of BWR Core Shrouds (BWRVIP-07)," EPRI Report TR-105747, February 1996.

3. "Shroud Vertical Weld Inspection and Evaluation Guidelines (BWRVIP-63)," EPRI Report TR-113170, June 1999.

4. Letter from C.E. Carpenter, Jr. (NRC) to J.T. Beckham, Jr. (BWRVIP Chairman), "Request for Additional Information – Review of BWR Vessel and Internals Project Proprietary Report, "BWR Vessel and Internals Project, Guidelines for Reinspection of BWR Core Shrouds (BWRVIP-07)," May 21,1996.

5. Letter from Gus C. Lainas (NRC) to Carl Terry (BWRVIP) Chairman, "Transmittal of NRC Staff's Safety Evaluation of the BWR Vessel and Internals Project BWRVIP-07 Report (TAC No. M94959)," September 15, 1997.

6. Letter from Gus C. Lainas (NRC) to Carl Terry (BWRVIP) Chairman, "Final Supplement to the Safety Evaluation of the BWR Vessel and Internals Project BWRVIP-07 Report," April 27, 1998.

7. GE RICSIL 054, Revision 1, "Core Shroud Cracks," July 1993.

8. GE SIL 572, Revision 1, "Core Shroud Cracks," October 1993.

9. GE RICSIL 068, Revision 2, "Update on Core Shroud Cracking," May 1994.

10. NRC Information Notice 93-79, "Core Shroud Cracking at Beltline Region Welds in BWRs," September 1993.

11. NRC Information Notice 94-42 and Supplement 1, "Cracking in the Lower Region of the Core Shroud in BWRs," July 1994.

12. "BWR Core Shroud Evaluation," Report GE-NE-523-148-1193, April 1994.

13. NRC Generic Letter 94-03, dated July 25, 1994. Re: Intergranular Stress Corrosion Cracking of Core Shrouds in Boiling Water Reactors.

14. "BWR Core Shroud Inspection and Evaluation Guidelines," Report GENE –523-113-0894, September 2, 1994.

15. "BWR Core Shroud Inspection and Flaw Evaluation Guidelines," Report GENE –523-113-0894, Rev. 1, March 1995.

16. Letter from B.W. Sheron, Director- Division of Engineering, U.S. Nuclear Regulatory Commission, to J.T. Beckman, Chairman-BWRVIP dated December 28, 1994: Evaluation of "BWR Shroud Cracking Generic Safety Assessment," Rev.1, GENE-523-A10794, August 5, 1994 and "BWR Core Shroud Inspection and Evaluation Guidelines," Report GENE –523-113-0894, September 2, 1994.

17. Letter from B.W. Sheron, Director- Division of Engineering, U.S. Nuclear Regulatory Commission, to J.T. Beckman, Chairman-BWRVIP dated June 16, 1995: Evaluation of "BWR Core Shroud Inspection and Evaluation Guidelines," Report GENE –523-113-0894, Rev. 1, dated March 1995, and "BWRVIP Core Shroud NDE Uncertainty and Procedure Standard," dated November 22, 1994.

18. Letter from Robin Dyle (Technical Chairman BWRVIP Assessments Committee) to C.E. Carpenter (NRC), "Response to NRC Request for Additional Information on BWRVIP-07," October 21, 1996.

19. Letter from Vaughn Wagoner (Technical Chairman BWRVIP Integration Committee) to C.E. Carpenter (NRC), "Response to NRC Staff Safety Evaluation of the BWR Vessel and Internals Project BWRVIP-07 Report," November 26, 1997.

20. "BWR Vessel and Internals Project, Core Shroud Repair Design Criteria, Rev. 2 (BWRVIP-02)," EPRI Report TR-112642, March 1999.

21. "Reactor Pressure Vessel and Internals Examination Guidelines (BWRVIP-03) Revision 1," EPRI Report TR-105696-R1, March 1999.

22. Letter from William H. Bateman, Chief, Materials and Chemical Engineering Branch, Office of Nuclear Reactor Regulation, to Carl Terry, BWRVIP Chairman, dated November 3, 1999: "Errata in Revised BWRVIP-07 Report Table 1."

23. "BWR Vessel and Internals Project, BWR Core Shroud Inspection and Flaw Evaluation Guidelines (BWRVIP-76)," EPRI Report TR-114232, November 1999.

24. "BWRVIP-94, Revision 1: BWR Vessel and Internals Project, Program Implementation Guide," EPRI Technical Report 1011702, December 2005.

A
CORE SHROUD DESIGN

A.1 Design

As illustrated in Figure 1-1, the core shroud is a welded assembly typically composed of three austenitic stainless steel cylindrical shell sections and three rings. The three rings are the shroud head flange, top guide support ring, and core plate support ring. The top cylindrical shell (between welds H1 and H2) connects the shroud head flange to the top guide support ring. The longest cylindrical portion (between welds H3 and H5) connects the top guide support ring to the core plate support ring. The bottom cylindrical shell (between welds H6 and H7) connects the core plate support ring to the shroud support cylinder. The shroud support legs are located at the bottom edge of the shroud support cylinder (a few plants, supported on the cantilever principle, do not have support legs).

[[

Content Deleted -
EPRI Proprietary Information

]] TS

[[

Content Deleted -
EPRI Proprietary Information

]] TS

A.2 References

A-1. Responses to NRC Questions on Core Shroud and Reactor Internals "GE Report for BWROG," GENE-523-A114P-0894, August 1994.

B
CRACKING SUSCEPTIBILITY FACTORS AND CORE SHROUD CLASSIFICATION

Note to BWRVIP-76-A: Some of the information presented in this appendix has been superseded by more recent findings. The appendix has been left in its original form for historical purposes.

B.1 Cracking Susceptibility Factors

Cracking susceptibility factors were determined to identify conditions that likely would result in cracking near heat affected zones of welds in BWR core shrouds. The susceptibility factors are used to define inspection requirements that ensure adequate margins will be maintained between inspection intervals.

The pattern of cracking indicated from field inspections appears consistent with the stress corrosion cracking (SCC) susceptibility criteria (Water Chemistry, Material Carbon Content, Fabrication History, Neutron Fluence and Hot Operating Time) described in SIL 572, Revision 1 [B-1] and the BWROG report [B-2]. A brief discussion and summary of the variables that can influence susceptibility to SCC are presented in the remainder of this section.

B.1.1 Fabrication History

[[

Content Deleted -
EPRI Proprietary Information

]] TS

B.1.2 Neutron Fluence

[[

Content Deleted -
EPRI Proprietary Information

]] TS

B.1.3 Water Chemistry

Extensive SCC testing has shown that SCC initiation and growth are strongly dependent on the electrochemical corrosion potential (ECP) on the surface of a component. ECP depends on the level of oxidants, such as oxygen and peroxide, in the reactor water. However, there is no historical database of ECP or the levels of oxidants at the shroud surfaces, so ECP cannot be used as a factor for susceptibility grouping.

[[

Content Deleted -
EPRI Proprietary Information

]] TS

B.1.4 Material Carbon Content

[[

Content Deleted -
EPRI Proprietary Information

]] TS

[[

Content Deleted -
EPRI Proprietary Information

]] TS

B.1.5 Hot Operating Time

As with any stress corrosion phenomenon, the frequency and extent of core shroud weld cracking would be expected to correlate with hot operating time. Plant data for hot operating time, defined as the time spent with reactor coolant above 200°F, is not readily available. Consequently, SCC susceptibility was correlated with on-line years, which is a close approximation of time above 200°F.

A plot of extent of circumferential cracking versus on-line years is shown in Figure B-2 with fabrication form as a parameter. [[

Content Deleted -
EPRI Proprietary Information

]] TS

B.1.6 Conclusion

Based on the preceding discussion, several conclusions can be drawn from the available inspection results relative to the susceptibility grouping factors:

[[

Content Deleted -
EPRI Proprietary Information

]] TS

B.2 Core Shroud Categories

Based on the information presented in Section 2.2 the following core shroud categories have been defined for developing inspection strategies for core shroud welds.

[[

Content Deleted -
EPRI Proprietary Information

]] TS

[[

Content Deleted -
EPRI Proprietary Information

]] TS

B.3 References

B-1. GE SIL 572, Revision 1, "Core Shroud Cracks," October 1993.

B-2. "BWR Core Shroud Evaluation," Report No. GE-NE-523-148-1193, April 1994.

[[

Content Deleted -
EPRI Proprietary Information

]] TS

Figure B-1
Extent of Cracking versus Mean Conductivity for the First 5 Cycles

[[

Content Deleted -
EPRI Proprietary Information

]] TS

Figure B-2
Extent of Cracking versus On-line Years

C
BASES FOR INSPECTION INTERVAL: HORIZONTAL WELDS

Note: The evaluations presented in this section form the basis for the generic shroud horizontal weld reinspection intervals in Table 2-1. Since these analyses were performed using a fracture toughness of 150 ksi√in, the application of Table 2-1 is limited to fluences less than or equal to 1E21 n/cm². The evaluations in this Appendix should not be used as the basis for plant-specific evaluations. Plant-specific evaluations for horizontal welds should follow the guidance of Appendix D.

C.1 Introduction

The objectives of the core shroud inspections are to determine the extent of crack growth in the shroud welds during the preceding operating interval, and monitor the structural integrity of the core shroud. These objectives can be accomplished by defining inspection intervals during which existing cracks in the core shroud will not grow to unacceptable lengths.

The purpose of the work in this appendix was to perform generic fracture mechanics analyses to define conservative, generic inspection intervals. The remaining ligament approach specified by the BWR Vessels & Internals Project (VIP) Assessment Subcommittee [C-1] was used in this work. Both limit load and linear elastic fracture mechanics (LEFM) methodologies were evaluated, with the intent of examining the sensitivity of the analyses to the various assumptions made.

A primary objective of this evaluation was focused on determining inspection intervals that are based on near-bounding, yet reasonably conservative, input and assumptions that ensure required minimum safety factors are maintained. The final result would be reinspection intervals that can be used by plant owners as effective criteria for establishing whether continued operation without repair for a predefined time interval is acceptable. A natural conclusion to these results also would be determination of the point in time when repair is considered to be a necessity.

This appendix documents the results of the generic analyses performed, including a description of the methodology and assumptions used. The results of these analyses provide a final set of graphs and tables that establish the time until the allowable safety factor is reached as a function of detected cracking.

C.2 Overview Of Generic Analyses Performed

This section provides an overview of the generic analyses performed as a part of this work. A description of the work is broken down into the following three analyses: (1) calculation of inspection intervals based on limit load evaluation, (2) calculation of inspection intervals based on LEFM evaluation, and (3) evaluation for alternate crack growth rates.

The purpose of these analyses was to assess the minimum required ligament (L_{min}) for various scenarios representing most BWR plants. The **D**istributed **L**igament **L**ength (DLL) computer code [C-2] was used to perform this assessment for net section collapse (i.e., limit load) methodology, and appropriate textbook solutions were consulted for LEFM methodology.

Various cases were evaluated assuming different cracking amounts to establish the length of time until the safety factor reached the allowable value. Regions of the weld that were assumed to be cracked were assumed to have through-wall flaws because growth and inspection uncertainty would cause part through-wall flaws to grow through-wall in a few fuel cycles at the "upper bound" rate of 5×10^{-5} inch/hour. One-half of the circumference was assumed to be inspected. Of the remaining 50%, a portion was assumed to be cracked through-wall based on the statistical model described in Appendix H.

Crack growth and an inspection uncertainty of (0.4" + 0.5°) [C-3] on each end of all flaws were used, and ASME Code proximity rules were applied. Six cases were assessed which assumed 10%, 20%, 25%, 30%, 35%, and 40% of the inspected region was cracked. Five sub-cases were evaluated for each case corresponding to one, two, three, seven, and twelve 24-month fuel cycles (assuming 16,000 hours/cycle).

The faulted condition was evaluated, and a safety factor of 1.39 was used [C-4]. Inspection intervals are strongly dependent upon the loading assumed. Because of a wide range of variability in seismic loading between BWR plants, a series of load levels were evaluated to prevent the application of high seismic loading results to a low seismic loading plant.

Minimum safety factors as determined from the DLL program were obtained for each of the fuel cycle cases evaluated. By comparing these results to the allowable safety factor required during faulted conditions (1.39), the inspection intervals were determined.

C.3 Generic Evaluation Input and Assumptions

C.3.1 Use of Faulted Loading Conditions.

[[

Content Deleted -
EPRI Proprietary Information

]] TS

[[

Content Deleted -
EPRI Proprietary Information

]] TS

C.3.2 Core Shroud Integrity

Generally, limit load techniques are exclusively used to structurally evaluate the condition of shroud horizontal welds. For non-beltline welds, the structural integrity of the core shroud is based on limit load analyses because brittle fracture of the austenitic stainless steel core shroud material in non-beltline regions is not considered credible due to its inherent toughness.

[[

Content Deleted -
EPRI Proprietary Information

]] TS

C.3.3 Material Strength and Shroud Geometry

Limit load analyses are based on the ASME Section III design allowable stress of Type 304L stainless steel. The design allowable stress of Type 304 stainless steel material is about 15 percent higher. Therefore, use of Type 304L strength properties is conservative.

An allowable material toughness value, K_{IC}, of 150 ksi$\sqrt{in}$ was used in the LEFM analysis [C-1], and the minimum safety factor for each case was obtained by dividing K_{IC} by the maximum calculated stress intensity factor (to yield a minimum safety factor). By comparing these results to the allowable safety factor required during faulted conditions, the inspection intervals were determined. Reference C-5 provides a discussion of the fracture toughness properties of irradiated austenitic stainless steel.

In addition, structural analyses were based on a relatively small core shroud diameter of 176 inches and a thickness of 1.5 inches. A smaller core shroud diameter provides conservative results since a given crack growth will consume a larger portion of the weld circumference compared to larger diameter shrouds.

C.3.4 Crack Growth Rate and NDE Uncertainty

[[

Content Deleted -
EPRI Proprietary Information

]] TS

C.3.5 Number, Extent and Distribution of Cracks and in the Core Shroud

For purpose of the generic analysis, 50 percent of the length of the horizontal welds was assumed to have been inspected. Previous core shroud structural analyses assumed that inaccessible regions of the welds were 100 percent cracked. This approach is considered unnecessarily conservative and could lead to unwarranted actions by licensees (e.g., installing repairs when repairs are not warranted). A statistical methodology was utilized for estimating the extent of cracking in inaccessible regions of the core shroud (see Appendix H).

The method assumes that 50 percent of the weld has been inspected, the defect rate found in the inspected region of the core shroud is representative of the defect rate of the entire weld, and the cracks are randomly distributed such that the probability of cracks in any region of the weld does not depend on the results of inspections in other regions of the weld. The results, obtained from the statistical analysis in Appendix H, are summarized here in Table C-1. The statistical method assigned a defect rate (percent cracking) in inaccessible regions with a 95 percent confidence level. That is, there is a 95 percent confidence that the actual defect rates in inaccessible regions of the core shroud will be less than or equal to the assigned defect rates given in Table C-1.

Table C-2 presents the crack conditions used in the generic evaluation. The first three columns contain the assumed as-found inspection results where the assumed inspection length is 50 percent of the length of the weld. The fourth, fifth and sixth columns list the estimated cracking in the uninspected region based on application of the results in Table C-1 to the as-found results. The seventh, eighth, and ninth columns list the total cracking for the total length (inspected and uninspected) of the weld, where the eighth and ninth columns include NDE uncertainty. The last column is the annual growth rate. All cracked areas are conservatively considered to be cracked through-wall for purposes of the generic analysis.

All flaws were assumed to be equally spaced and of equal lengths in a quantity proportional to that experienced by a BWR with significant cracking. The assumption of equally spaced flaws is conservative for a limit load solution that considers crack growth in the future in that it allows the maximum amount of crack growth (i.e., all flaws grow from both ends the maximum amount). Additional considerations, described in Section C.4.2, were used for the LEFM analyses where proximity end effects are controlling for closely spaced cracks.

Table C-1
Defect Rates in Inaccessible Regions of Core Shroud Welds

[[

Content Deleted -
EPRI Proprietary Information

]] TS

Table C-2
Crack Length Assumptions Used to Determine Reinspection Intervals

[[

Content Deleted -
EPRI Proprietary Information

]] TS

Based on the above discussion, the assumptions and conditions used in the generic fracture mechanics analyses are considered to result in conservative estimates of crack growth and core shroud integrity.

C.3.6 Summary of Input to Limit Load and LEFM Analyses

The inputs used for this evaluation are summarized in Table C-3, and the cases analyzed are summarized in Table C-4. Flaws assumed for this evaluation were all equally spaced, with a quantity and length as shown in Table C-4.

Table C-3
Geometry and Stress Data

[[

Content Deleted -
EPRI Proprietary Information

]] TS

Table C-4
Parameters Used

[[

Content Deleted -
EPRI Proprietary Information

]] TS

C.4 Computational Results

C.4.1 Results From Generic Limit Load Analyses

This section presents the results of the limit load analyses, which used the methodology described in the Section C.2, and the input from Tables C-3 and C-4.

The computational results, obtained from the DLL program using a coarse (i.e., 1° increment) mesh, are shown in Figures C-1 through C-3 for the 1 ksi, 3 ksi and 6 ksi stress levels, respectively. The results are presented in terms of minimum safety factor as a function of time. The allowable safety factor for faulted conditions is also shown on the plots for reference purposes. These plots form the basis for establishing inspection intervals as a function of the amount of cracking detected (assuming at least 50 percent of the circumference is inspected) based on limit load methodology.

C.4.2 Results From Generic LEFM Analyses

The inputs used for the LEFM evaluation were the same as described previously for the limit load evaluation. The LEFM results were obtained in terms of the stress intensity factor between adjacent flaws. The assumed allowable material toughness value of 150 ksi$\sqrt{\text{in}}$ [C-1] was divided by the maximum stress intensity factor to yield a safety factor. The resulting safety factor was divided by two (for reasons detailed below) to yield a final minimum safety factor.

As noted for the limit load evaluation, flaws assumed for this evaluation were all equally spaced with a quantity and length as shown in Table C-4. This flaw arrangement provides limiting results from a limit load point-of-view (because of maximizing flaw growth); however, it does not necessarily lead to limiting LEFM results since flaw tip interaction considerations are important for such a solution. For example, two long flaws spaced closely together yields a more limiting LEFM solution than several shorter flaws spaced equally. Therefore, in order to address this issue, several flaw configurations were evaluated as shown in Table C-5.

[[

Content Deleted -
EPRI Proprietary Information

]] TS

Figure C-1
Results of Limit Load Evaluation for 1 ksi Stress Level

[[

Content Deleted -
EPRI Proprietary Information

]] TS

Figure C-2
Results of Limit Load Evaluation for 3 ksi Stress Level

[[

Content Deleted -
EPRI Proprietary Information

]] TS

Figure C-3
Results of Limit Load Evaluation for 6 ksi Stress Level

Table C-5 shows the LEFM results for three different flaw configurations. For each case, the flaws were distributed differently in terms of quantity, spacing and individual length. In addition, the solution technique chosen for Cases 1 and 2 is the same as that previously documented [C-1], whereas the solution technique for Case 3 is specific to the actual flaw layout.

[[

Content Deleted -
EPRI Proprietary Information

]] TS

Table C-5
LEFM Results for Different Flaw Distributions

[[

Content Deleted -
EPRI Proprietary Information

]] TS

[[

Content Deleted -
EPRI Proprietary Information

]] TS

Figure C-4
Results of LEFM Evaluation for 1 ksi Stress Level

[[

Content Deleted -
EPRI Proprietary Information

]] TS

Figure C-5
Results of LEFM Evaluation for 3 ksi Stress Level

[[

Content Deleted -
EPRI Proprietary Information

]] TS

Figure C-6
Results of LEFM Evaluation for 6 ksi Stress Level

C.4.3 Summary of Generic Limit Load and LEFM Analyses Results

The final results of the limit load analyses shown in Figures C-1 through C-3, and the LEFM analyses shown in Figures C-4 through C-6, are expressed in terms of the minimum safety factor as a function of time for three stress levels. These results provide the basis for establishing the inspection intervals based on the stress level and the amount of cracking found during inspections.

The results from Figures C-1 through C-6 were used to determine the time to reach the specified safety factor, and the results are presented in Tables C-6 through C-8 for the three stress levels evaluated, where 8,000 hours per year of hot operation have been assumed. It was assumed throughout the analyses that produced these results that at least 50 percent of the circumference has been examined, so that a large enough sample size is available to reasonably apply the statistical model described in Appendix H. The amount of cracking is expressed in terms of the percentage of inspected areas.

Table C-6
Analysis Results for 1 ksi Stress Level[4]

[[

Content Deleted -
EPRI Proprietary Information

]] TS

Table C-7
Analysis Results for 3 ksi Stress Level[4]

[[

Content Deleted -
EPRI Proprietary Information

]] TS

Table C-8
Analysis Results for 6 ksi Stress Level[4]

[[

Content Deleted -
EPRI Proprietary Information

]] TS

C.5 Generic Inspection Intervals

The results shown in Tables C-6 through C-8 contain the information used to define the generic inspection intervals. The generic inspection was obtained from the results in Tables C-6 through C-8 by capping the times at a maximum of 120 months (10 years) in accordance with the rationale in NUREG-0313 [C-6]. In view of the number of plants with some degree of core shroud cracking, this approach is considered reasonable and prudent, even though results of fracture mechanics analyses indicate longer inspection intervals could be technically justified when the cracking is less than about 30 percent and the stress is less than about 3 ksi.

The inspection intervals determined by capping the data in Tables C-6 through C-8 are presented in Table C-9 as a function of the degree of cracking found in the accessible regions of the weld and the faulted stress level in the weld for both limit load and LEFM evaluation methodologies.

For non-beltline welds, the inspection interval should be based on limit load results. For beltline welds with a neutron fluence greater than 3×10^{20} n/cm^2, the inspection interval should be based on the more limiting of the limit load results or the linear elastic fracture mechanics (LEFM) results. The fluence is the estimated accumulated neutron fluence at the time of the next inspection.

The inspection interval results can be linearly interpolated for stress levels other than those shown here. For example, if the total stress is 2 ksi, the 1 ksi and 3 ksi tables can be used, and linear interpolation can be performed to determine the inspection interval. Linear interpolation provides accurate results for limit load and is generally slightly conservative for LEFM (i.e., interpolated inspection intervals are slightly shorter). This conservatism is due to the non-linear nature of the LEFM solution coupled with the fact that limiting assumptions were used in the analyses which produced these results.

The inspection intervals are such that the core shroud will be inspected before the safety margin on the structural integrity of the core shroud is reduced to below 1.39 during faulted loading conditions. The safety margin on upset loading conditions will be about a factor of 2 higher since upset stress levels in the core shroud are roughly ½ faulted stress levels.

Table C-9
Core Shroud Inspection Intervals for Category B and C Plants (in years) [7]

[[

Content Deleted -
EPRI Proprietary Information

]] TS

[[

Content Deleted -
EPRI Proprietary Information

]] TS

C.6 References

C-1. General Electric Report No. GENE-523-113-0894, Revision 1, "BWR Core Shroud Inspection and Flaw Evaluation Guidelines," March 1995.

C-2. General Electric Report No. GENE-523-113-0894, Supplement 1, "BWR Core Shroud Distributed Ligament Length Computer Program," September 1994, Version 10/07/94.

C-3. EPRI NDE Center Report by Greg Selby, Stan Walker and Jeff Landrum, "BWR-VIP Core Shroud NDE Uncertainty & Procedure Standard," Prepared for Boiling Water Reactor Vessel & Internals Project Inspection Subcommittee, November 21, 1994.

C-4. ASME Boiler and Pressure Vessel Code, Section XI, Rules for Inservice Inspection.

C-5. "BWR Core Shroud Inspection and Flaw Evaluation Guidelines," GENE-523-113-0894, Rev. 1, General Electric Company, March 1995. Prepared for BWRVIP Assessment Committee.

C-6. "Technical Report on Material Selection and Processing Guidelines for BWR Coolant Pressure Boundary Piping," NUREG-0313, Rev. 2, Nuclear Regulatory Commission, 1988.

D
PLANT SPECIFIC EVALUATION PROCEDURE: HORIZONTAL WELDS

This appendix provides the methodology and guidance that can be used to determine the uncracked ligament lengths needed at the horizontal welds to ensure adequate structural margins. Ideally, the azimuths of the ligament lengths may be symmetric in the plane of the weld. However, access limitations may cause the ligament lengths available for inspection to be distributed randomly along the weld (e.g., see Figure D-3). Therefore, the methodology and guidance provided in this section describe the general case that covers all possible distributions of ligament, and considers proximity rules (see Appendix G).

The minimum amount of ligament (L_{min}) required in order to operate for "n" years prior to the next inspection is given as:

[[

Content Deleted -
EPRI Proprietary Information

]] TS

[[

Content Deleted -
EPRI Proprietary Information

]] TS

A brief description of these techniques is first provided followed by a detailed description of the procedure for evaluation.

D.1 Fluence Levels and Fracture Mechanics Methods

[[

Content Deleted -
EPRI Proprietary Information

]] TS

[[

Content Deleted -
EPRI Proprietary Information

]] TS

[[

Content Deleted -
EPRI Proprietary Information

]] TS

D.1.1 Approach to Evaluate High Fluence Welds

[[

Content Deleted -
EPRI Proprietary Information

]] TS

[[

Content Deleted -
EPRI Proprietary Information

]] TS

Figure D-1
Azimuthal Fluence Profile at Shroud Inner Radius at the Axial Midplane

[[

Content Deleted -
EPRI Proprietary Information

]] TS

Figure D-2
Axial Fluence Profile at Shroud Inner Radius at Maximum Azimuthal Position

D.2 Limit Load Method

Figure D-3 shows a schematic representative plan view of an asymmetric distributed uncracked ligament. It is assumed that there are 1,2,...i,...n ligament lengths and that the ith length is of thickness 't_i' and extends from an azimuth of θ_{i1} to θ_{i2}. The ligament length 'l_i' of the ith ligament is related to azimuth angles θ_{i1} and θ_{i2} by the following relationship:

$$l_i = (D/2) \bullet (\theta_{i1} - \theta_{i2}) \qquad \textbf{(Eq. D-1)}$$

where, D is the diameter of the shroud. The calculation of moment 'M' that this ligament configuration can resist is somewhat complicated since it is not clear as to which azimuthal orientation of the neutral/central axis would produce the least value of bending moment, 'M'. Therefore, the value of 'M' is calculated for various orientations of the central axis from 0° to 360°. This calculation is performed in two steps:

[[

Content Deleted -
EPRI Proprietary Information

]] TS

[[

Content Deleted -
EPRI Proprietary Information

]] TS

[[

Content Deleted -
EPRI Proprietary Information

]] TS

D.3 LEFM Method

For a through-wall flaw in an "infinite" plate, the stress intensity factor K is given by the following:

$$K = \sigma\sqrt{(\pi a)} \qquad \textbf{(Eq. D-2)}$$

where, σ is the remote membrane stress and a is the half crack length. The shroud is a cylinder and therefore, a curvature correction factor, G_m, needs to be applied to the above-calculated value of K based on the infinite plate solution. The values of G_m are given in Figure D-5 (from Reference D-3) as a function of the non-dimensional parameter, $a/\sqrt{(Rt)}$. The behavior of G_m for $a/\sqrt{(Rt)}$ greater than 4.5 can be linearly extrapolated based on data from Reference D-8. The coefficient G_b was not used since only the average value of the stress intensity factor across the crack tip is required.

The ligament length may be small enough that there is some interaction between the crack tips, leading to a higher value of K than that given by the above equation. This interaction effect was conservatively accounted for in the screening criteria approach [D-10]. A more reasonable yet conservative approach is used here by considering a classical solution for a series of flaws, given in Reference D-4.

Figure D-6 (from Reference D-4) shows the geometry and the K solution for a series of equi-length, equi-distant through-wall flaws in an infinite plate subjected to remote tension. The K solution is given by:

[[

Content Deleted -
EPRI Proprietary Information

]] TS

D.4 EPFM Methodology

The EPFM based concepts developed by Paris and Hutchinson and incorporated into EPRI handbooks [D-5, D-6, D-7] can be used in lieu of the conservative LEFM approach in which only the crack initiation is considered. The EPFM approach considers ductile crack extension in determining the load carrying capability of a cracked structure. The EPFM based approach is also called a J-integral tearing stability approach or a J/T approach. Two key concepts in this approach are: (1) the J-integral which characterizes the intensity of the plastic stress-strain field surrounding the crack tip and (2) the tearing stability theory which examines the stability of ductile crack growth.

Figure D-7 schematically illustrates the J/T methodology. The material (J/T) curve or R-curve in Figure D-7 represents the material's resistance to ductile crack extension. Any value of J falling on the material R-curve is denoted as J_{mat} and is a function solely of the increase in crack length Δa. Figure D-7 also defines 'applied' J, which for given stress-strain properties and overall component geometry, is a function of the applied load P and the current crack length, a. The following two non-dimensional parameters are then defined:

[[

Content Deleted -
EPRI Proprietary Information

]] TS

[[

Content Deleted -
EPRI Proprietary Information

]] TS

D.5 Safety Factors

[[

Content Deleted -
EPRI Proprietary Information

]] TS

D.6 References

D-1 "Design Criteria for Irradiated Type-304 Stainless Steel in BWR Applications," GE Report No. NEDE-20364, June 1974.

D-2 "Evaluation of BWR Top-Guide Integrity," EPRI Report No. NP-4767, November 1986.

D-3 Rooke, D.P. and Cartwright, D.J., "Compendium of Stress Intensity Factors," The Hillingdon Press (1976).

D-4 Tada, H., Paris, P. and Irwin, G., "The Stress Analysis of Cracks Handbook," Del Research Corporation (1985).

D-5 "An Engineering Approach for Elastic-Plastic Fracture Analysis," EPRI Report No. NP-1931, July 1981.

D-6 "Advances in Elastic-Plastic Fracture Analysis," EPRI Report No. NP-3607, August 1984.

D-7 "Elastic-Plastic Fracture Analysis of Through-Wall and Surface Flaws in Cylinders," EPRI Report No. NP-5596, January 1988.

D-8 R.S. Barsoum, R.W. Loomis and B.D. Stewart, "Analysis of Through Cracks in Cylindrical Shells by the Quarter Point Elements," International Journal of Fracture, Vol. 15, No.3, June 1979.

D-9 S. Ranganath and H.S. Mehta, "Engineering Methods for the Assessment of Ductile Fracture Margin in Nuclear Power Plant Piping," ASTM STP 803 (1983).

D-10 GE RICSIL 054, Revision 1, "Core Shroud Cracks", July 1993.

D-11 "BWR Vessel and Internals Project, Reactor Pressure Vessel and Internals Examination Guidelines (BWRVIP-03) Revision 1," EPRI Report 105696-R1, March 1999.

D-12 "BWRVIP-164: BWR Vessel and Internals Project, Distributed Ligament Length (DLL) Version 3.0, Structural Analysis Software for BWR Internals" EPRI Software 1013367, December 2006.

D-13 "BWRVIP-14-A: BWR Vessel and Internals Project, Evaluation of Crack Growth in BWR Stainless Steel RPV Internals." EPRI, Palo Alto, CA: 2008. 1016569.

D-14 Draft Regulatory Guide 1053, "Calculational and Dosimetry Methods for Determining Pressure Vessel Neutron Fluence," US Nuclear Regulatory Commission, Office of Nuclear Regulatory Research, September 1999.

D-15 "BWRVIP-99-A: BWR Vessel and Internals Project, Crack Growth Rates in Irradiated Stainless Steels in BWR Internal Components." EPRI, Palo Alto, CA: 2008. 1016566.

D-16 "BWRVIP-100-A: BWR Vessel and Internals Project, Updated Assessment of the Fracture Toughness of Irradiated Stainless Steel for BWR Core Shrouds," EPRI Technical Report 1013396, August 2006.

D-17 Letter from William Eaton (BWRVIP Chairman) to Meena Khanna (NRC) "Project No. 704 – BWRVIP Response to NRC Request for Additional Information on NDE Flaw Sizing Uncertainty" dated May 5, 2004 (BWRVIP Correspondence Number 2004-191).

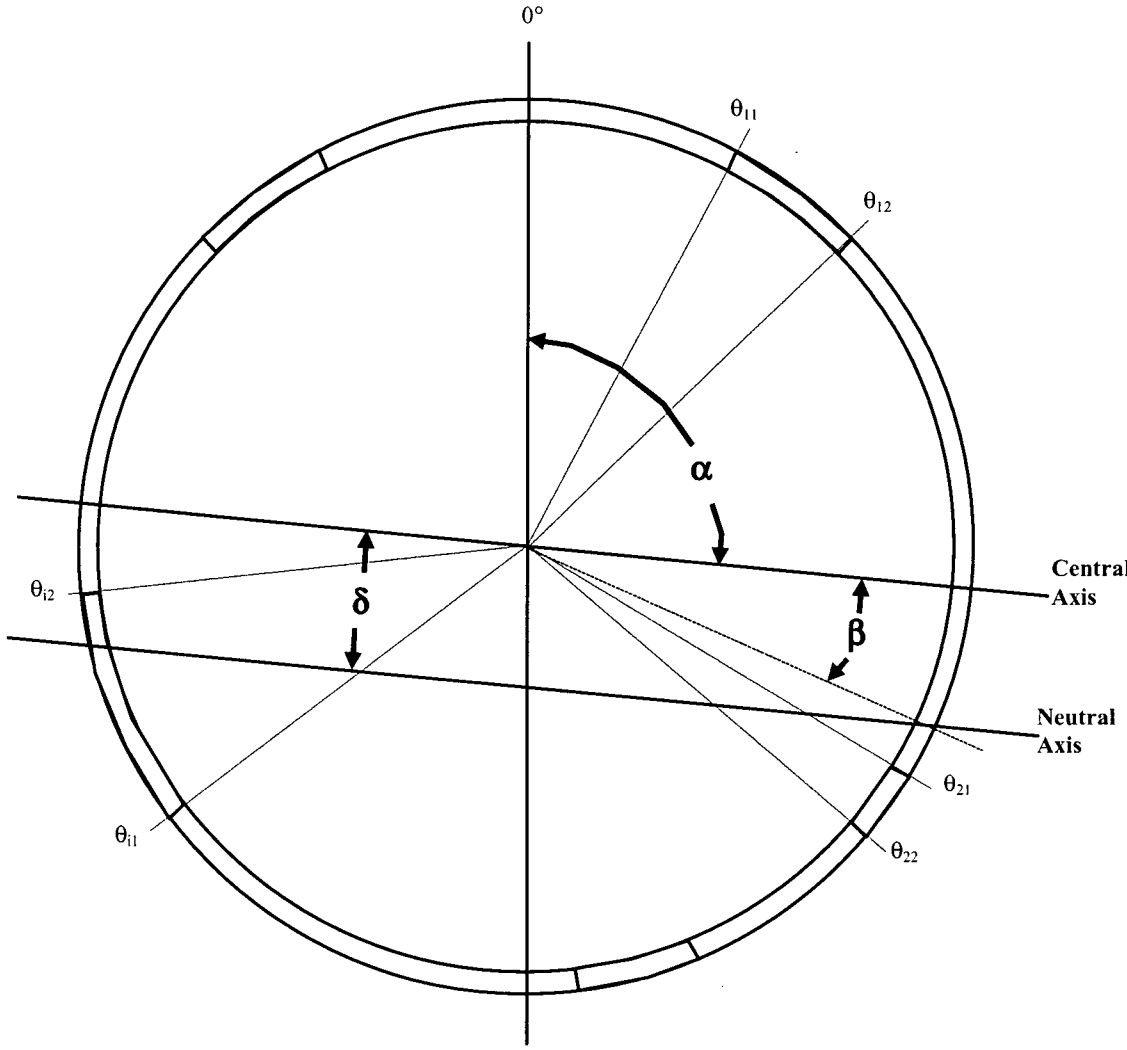

Figure D-3
Schematic of Non-Symmetric Ligament Distribution

[[

Content Deleted -
EPRI Proprietary Information

]] TS

Figure D-4
J-R Curves for Two Irradiated Stainless Steel Specimens at Fluence of $8x10^{20}$ n/cm^2

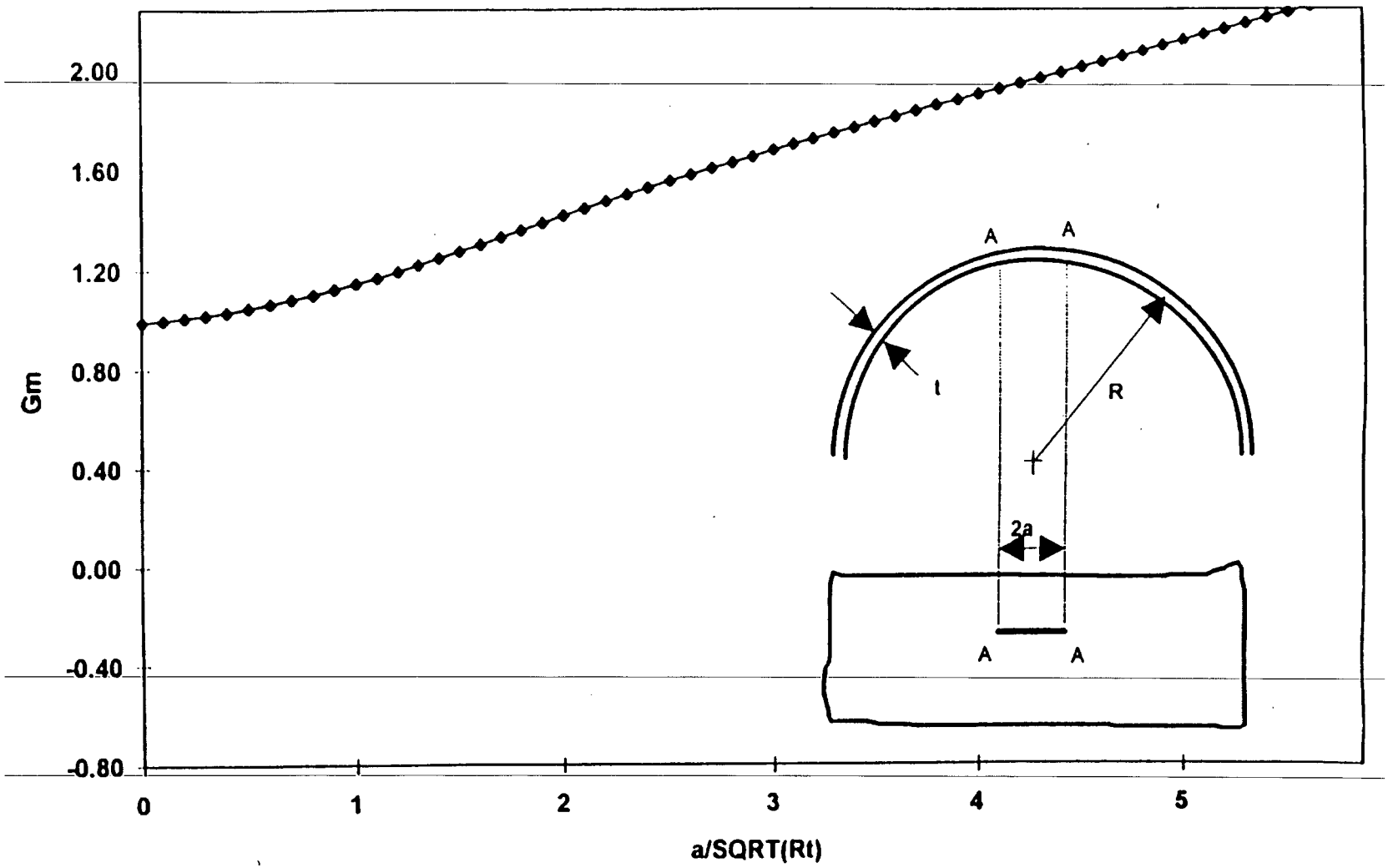

Figure D-5
Curvature Correction Factor G_m for Circumferential Flaw

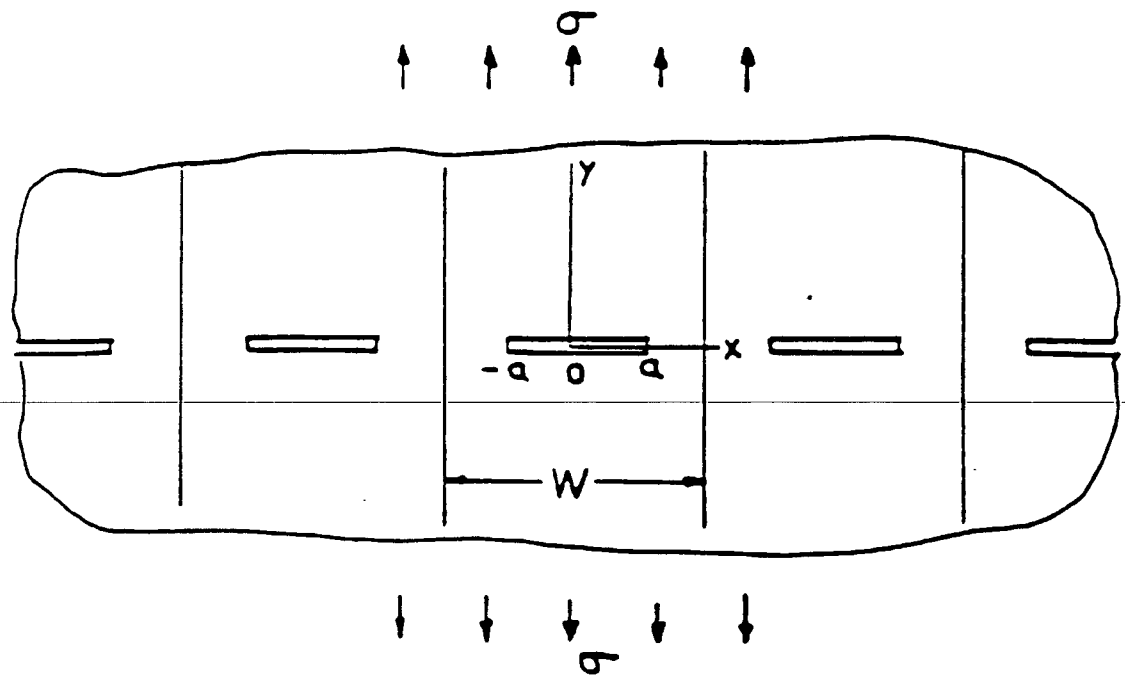

$$K_I = \sigma \sqrt{\{W \tan(\pi a/W)\}}$$

Figure D-6
Solution for Equi-Distant Equi-Length Flaws

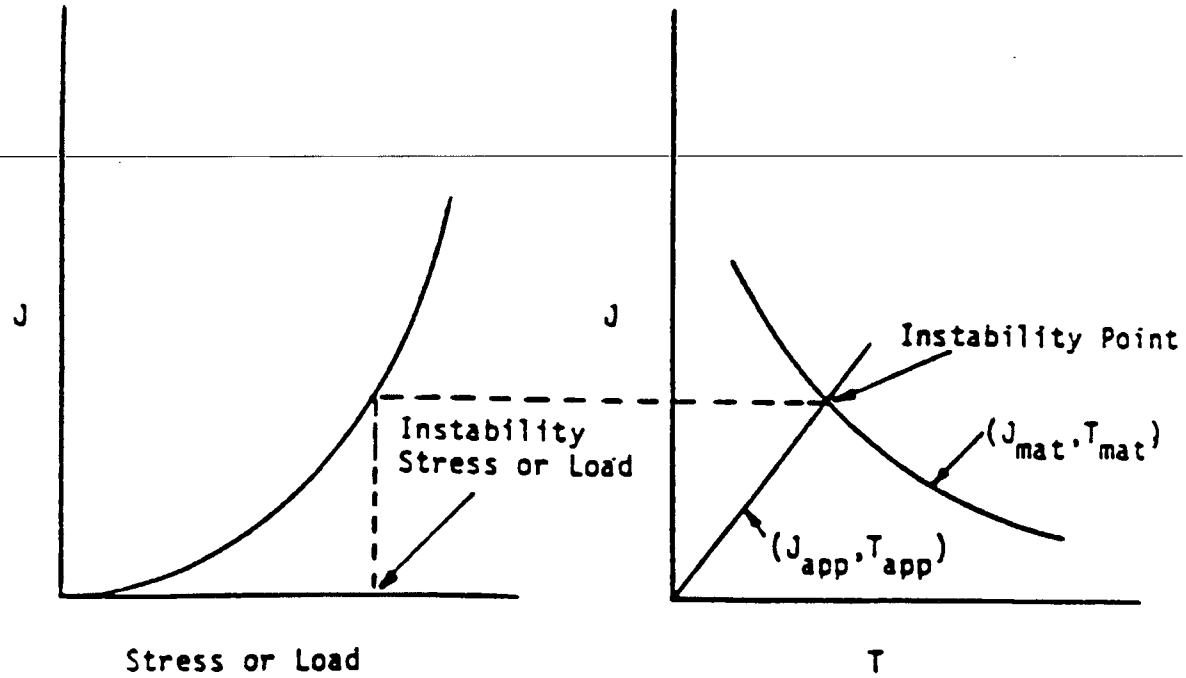

Figure D-7
Schematic of (J/T) Approach

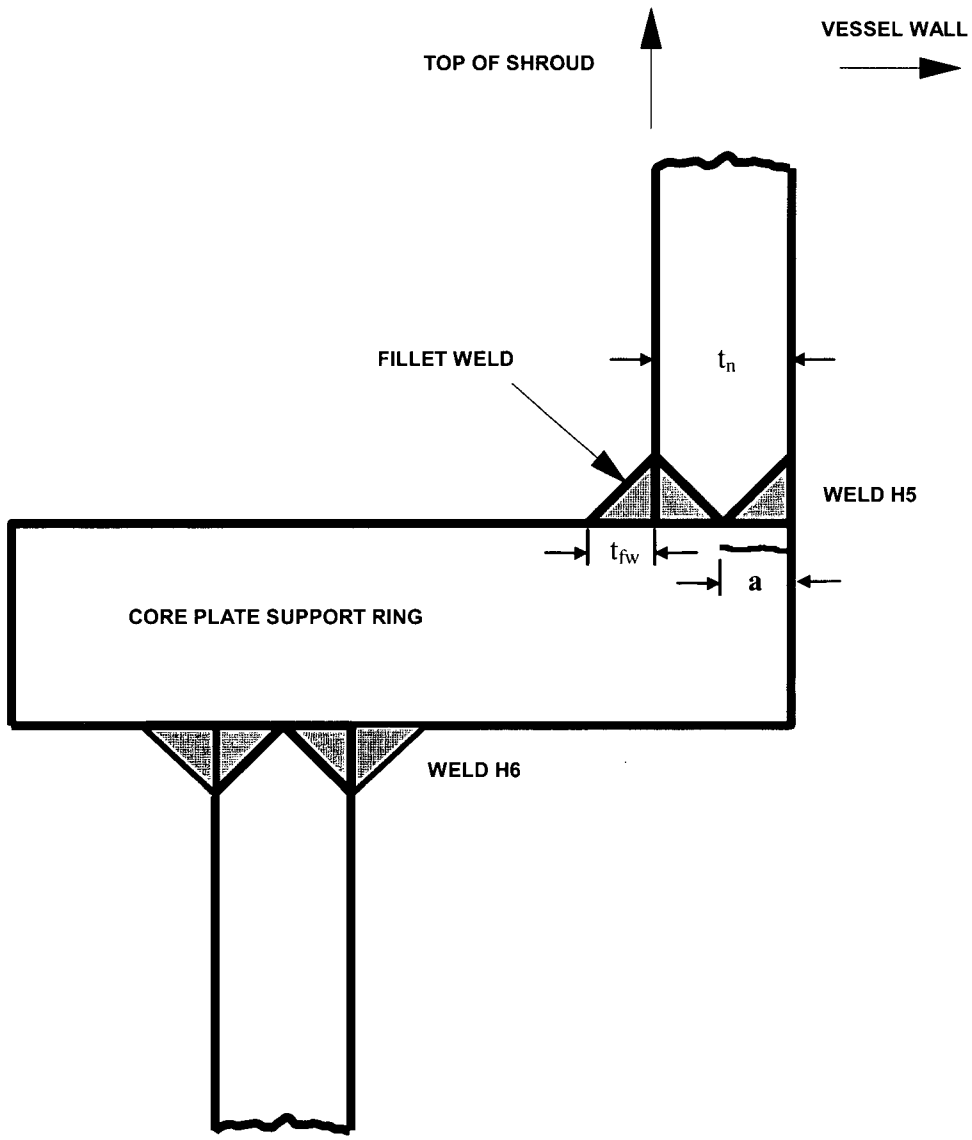

Figure D-8
Shroud Weld with 360° Crack

Table D-1
Conservatisms Included in Flaw Evaluation Methodology

1. All VT or ET identified surface indications are assumed to be through-wall for analysis for uncracked ligament length.
2. ASME Code Section XI primary pressure boundary safety margins were applied even though the shroud is not a primary pressure boundary.
3. ASME Code, Section XI proximity rules were applied.
4. A proximity rule to account for perpendicular flaws was applied, although not required by Section XI.

E

ANALYTICAL BASIS FOR SCREENING AND ACCEPTANCE CRITERIA FOR VERTICAL WELDS

Note: The evaluations presented in this section form the basis for the generic shroud vertical weld screening criteria of Section 2 and should not be used as the basis for plant-specific evaluations. Plant-specific evaluations for vertical welds should follow the guidance of Appendix F. Since the analyses in this Appendix were performed using a fracture toughness of 150 ksi $\sqrt{in}$, the application of the generic shroud vertical weld screening criteria is limited to fluences less than or equal to 1E21 n/cm^2.

This Appendix outlines the generic analyses which were performed in order to determine the inspection strategies given in Sections 2 and 3. Included in this Appendix are four cases. The first case (Case A) provides an allowable through-wall flaw in a vertical weld. This is intended to show the amount of uncracked ligament needed in the vertical weld, given no credit for the horizontal weld. The second case (Case B) provides an allowable through-wall flaw in the horizontal weld at the intersection with the vertical weld, given no credit for the vertical weld. The final two cases provide allowable flaws while taking credit for partial through-wall cracking in either the vertical weld (Case C) or the horizontal weld (Case D).

The primary stress, which could cause vertical weld failure, results from the internal pressure. Consistent with ASME Code practice (Appendix C, Section XI), internal pressure is the only load to be considered for axial cracks. The value of the internal pressure varies from plant to plant, but is typically small (less than 15 psi above the core plate for normal operation). Thus, the allowable crack sizes will typically approach the length of the weld itself, indicating large crack tolerance.

The structural analysis of the vertical weld consists of two methods: (1) limit load analysis, and (2) Linear Elastic Fracture Mechanics (LEFM). The technical approach for these two methods is described below.

The limit load methodology is concerned with the gross failure of the shroud section. The limit load analysis applies to all welds. The limit load calculations are performed using concepts similar to those described in Section XI, Appendix C of the ASME Code (Ref. E-1). For the limit load analysis, the minimum required ligament is calculated as the uncracked section of the weld needed to resist a force due to differential pressure across the shroud. The stress caused by this differential pressure is compared to the flow stress (assumed to be 3Sm), and a minimum required ligament is determined.

[[

Content Deleted -
EPRI Proprietary Information

]] TS

E.1 Case A: Allowable Through-Wall Flaw in Vertical Weld (Through-Wall Crack in Horizontal Weld over Entire Length)

This case, shown in Figure E-1, calculates the allowable through-wall flaw in the vertical weld, taking no credit for the integrity of the horizontal weld (cracks are represented in the figures by bold lines). The technical purpose of this case was to show how much through-wall cracking could occur in the vertical weld, while still maintaining structural margin. For this case, it was assumed that there was no cracking in the vertical weld at the intersection with the horizontal weld. Both LEFM and limit load methodologies were used to determine the allowable cracking. The technical basis and the results are included in the following.

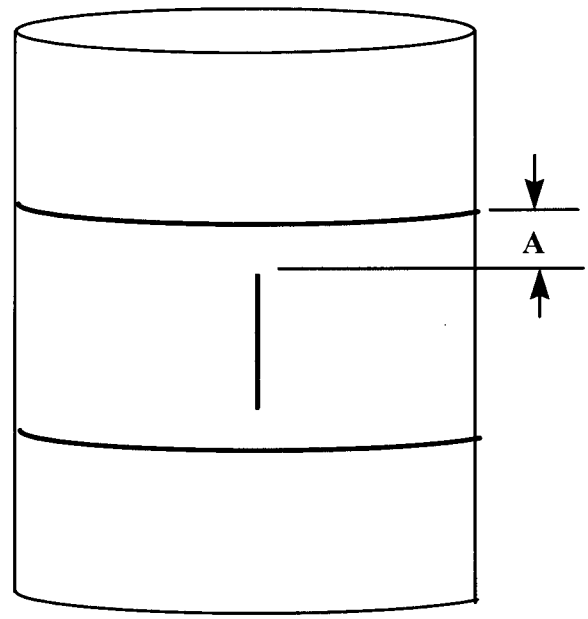

Figure E-1
Case A

E.1.1 LEFM Analysis

This analysis used a finite element solution. A Finite Element Shell Model was built, with Fracture Mechanics Crack Tip elements at the ends of the vertical weld cracks. Only half of the cylinder was modeled, and symmetrical boundary conditions were utilized. Thus, the results are applicable only to a symmetrical distribution of good ligament (as shown in Figure E-1).

A faulted internal pressure of 33 psi (includes a safety factor of 1.5) was applied to the model. Several shroud geometries and vertical weld lengths were used to determine the generic guidelines. For each case, the vertical weld cracks were grown until the stress intensity at the crack tip equaled the K_{IC} value of 150 ksi$\sqrt{in}$.

E.1.2 Limit Load Analysis

For the limit load analysis, a solution was used to calculate the remaining ligament needed to resist the hoop stress. For this case, the equation is given by:

$$(SF)\ PDL = 2\ (\sigma_f\ (2A)t) \qquad \textbf{(Eq. E-1)}$$

where:

σ_f	=	Flow Stress (~50 ksi)
D	=	Diameter of shroud
t	=	thickness of shroud
A	=	Length of uncracked vertical weld needed
SF	=	Safety Factor
P	=	ΔP across shroud
L	=	length of vertical weld

By rearranging the equation, the minimum required ligament can be calculated by the following formula:

$$A = (SF)PDL/(4t\sigma f) \qquad \textbf{(Eq. E-2)}$$

E.1.3 Results

[[

Content Deleted -
EPRI Proprietary Information

]] TS

[[

Content Deleted -
EPRI Proprietary Information

]] TS

E.2 Case B: Allowable Through-Wall Flaw in Horizontal Weld (Through-Wall Crack in Vertical Weld over Entire Length)

Similar to Case A, this analysis, shown in Figure E-2, assumes no intersecting cracking at the vertical/horizontal weld intersection. The purpose of this analysis is to show how much uncracked ligament must exist at the intersection, given that the vertical weld is entirely cracked, and the remaining horizontal weld is cracked through-wall. The LEFM and limit load technical bases and results are included in the following.

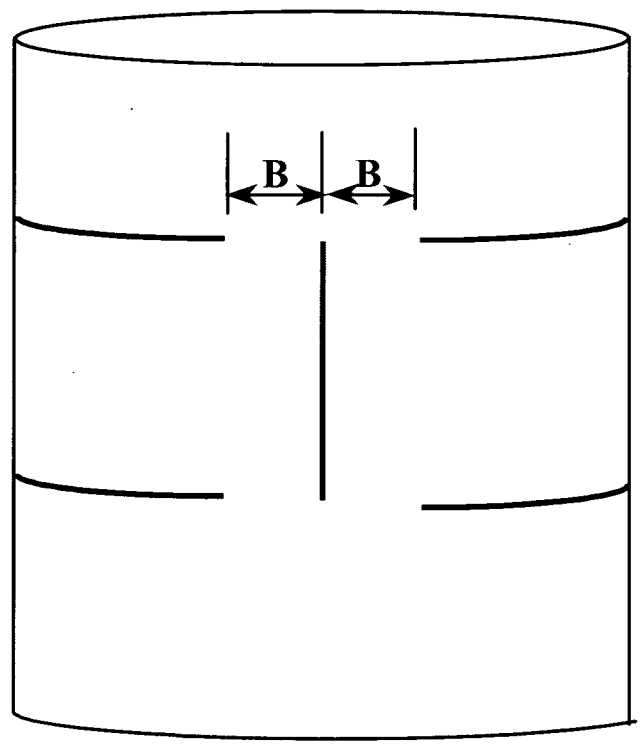

Figure E-2
Case B

E.2.1 LEFM Analysis

This analysis used a finite element solution. For this case, an initial finite element run was made for a through-wall vertical weld, with no circumferential cracking. The minimum amount of uncracked material needed at the horizontal/vertical weld intersection (B) was determined by increasing the crack segment in the horizontal weld in an iterative manner, while maintaining a through-wall crack in the vertical weld. It was assumed that an increase in K at the vertical weld crack tip of 10% from the original case (no circumferential crack) was significant. Therefore, the minimum amount of uncracked material (B) was determined when the K value at the vertical crack tip was increased by 10% from the base case of no circumferential cracking.

E.2.2 Limit Load Analysis

This analysis used a finite element solution to determine the amount of uncracked material needed at the crack intersection such that the average stress through the good section was less than the flow stress (~50 ksi). As in the LEFM case, the circumferential crack segment was increased in an iterative manner until the stress (including safety factor) in the uncracked section (B) was equal to the flow stress ($3S_m$).

E.2.3 Results

[[

Content Deleted -
EPRI Proprietary Information

]] TS

E.3 Case C: Allowable Part Through-Wall Flaw in Vertical Weld (Through-Wall Crack in Horizontal Weld over Entire Length)

This case was performed to address cracking in the intersection of the horizontal and vertical welds. For this case, partial credit was taken for part through-wall cracking in the vertical weld. This would allow for cracking to occur at the intersection, provided that the flaw depths do not exceed a specified amount. The allowable flaw depth is calculated over the entire length of the vertical weld. Similar to Case A, no credit was taken for the horizontal weld for this case.

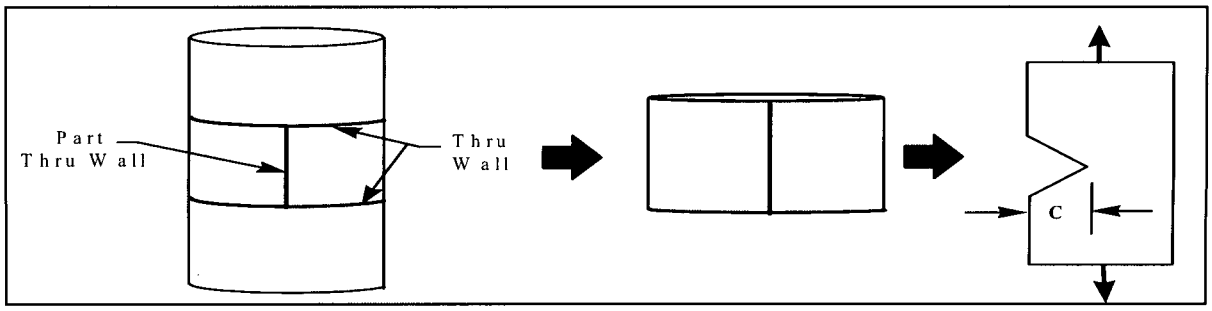

Figure E-3
Case C

E.3.1 LEFM Analysis

This analysis used a solution from Paris, Tada, "The Stress Analysis of Cracks Handbook". A flat plate approximation was used for a single edge notch test specimen. A normalized stress plot was utilized to determine the critical crack size (C) which would cause a stress intensity value equal to the fracture toughness value of 150 ksi$\sqrt{in}$. For this analysis, several geometries were analyzed, including: shroud radii of 88-100 in and shroud thickness of 1.5-2.0 inches. A faulted ΔP value of 33 psi (includes 1.5 safety factor) was used.

E.3.2 Limit Load Analysis

Similar to Case A limit load analysis, a closed form solution was used to calculate the remaining ligament needed to resist the hoop stress. For this case, the equation equating the flow stress with the hoop stress is given by the following:

$$(SF)PDL = \sigma_f (2L)(t-C) \qquad \textbf{(Eq. E-3)}$$

where:

σ_f	=	Flow Stress (~50 ksi)
L	=	Length of weld
D	=	Diameter of shroud
t	=	thickness of shroud
C	=	Allowable crack depth
SF	=	Safety Factor
P	=	ΔP across shroud

By rearranging the equation, the allowable crack depth can be calculated by the following formula:

$$C = t - [(SF)PD/(2\sigma_f)] \qquad \textbf{(Eq. E-4)}$$

E.3.3 Results

[[

Content Deleted -
EPRI Proprietary Information

]] TS

E.4 Case D: Allowable Part Through-Wall Flaw in Circumferential Weld (Through-Wall Crack in Vertical Weld over Entire Length)

This analysis assumes a part through-wall flaw in the horizontal weld and a complete through-wall flaw in the vertical weld. Consequently, the evaluation determines the allowable crack depth of the horizontal weld. This would permit no inspection of the vertical weld, as long as the cracking in the horizontal weld is acceptable.

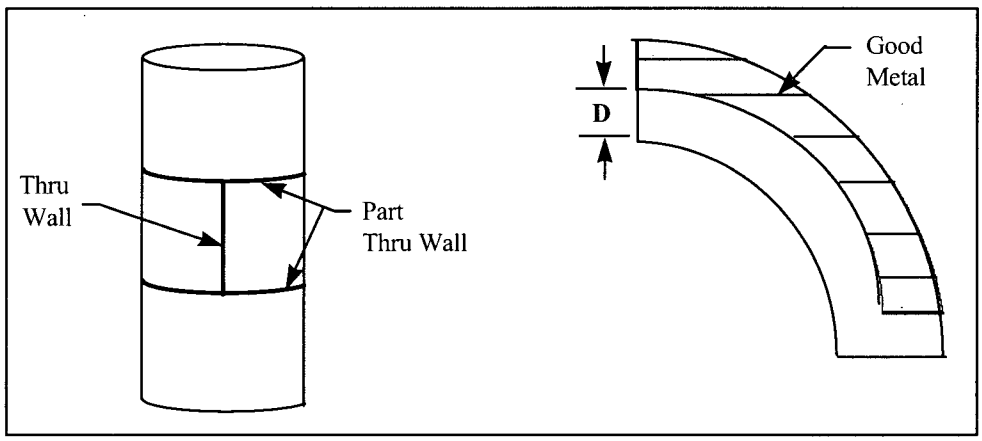

Figure E-4
Case D

E.4.1 LEFM Analysis

This case used two separate analytical methodologies. The first methodology used a closed form solution. The entire shroud was assumed to be thinned by the part through-wall crack. That is, if the part through-wall crack in the horizontal weld was half the thickness of the shroud, then the entire shroud was assumed to have a thickness equal to half the thickness of the shroud. Effectively, this would increase the stress in the shroud by a ratio of (1/(1-crack depth/thickness of shroud)). A K solution could then be calculated and compared to a fracture toughness value of 150 ksi√in. The equation is:

$$K = (SF)\,M\sigma\sqrt{\pi a} \qquad \textbf{(Eq. E-5)}$$

where:

M	=	curvature correction factor	
	=	$(1+1.25\lambda^2)^{0.5}$	$(0 \le \lambda \le 1)$
	=	$(0.6+0.9\lambda)$	$(1 \le \lambda \le 5)$
λ	=	$a/\sqrt{(Rt)}$	
SF	=	Safety Factor	
σ	=	hoop stress (scaled by 1/(1-D/t))	
R	=	shroud radius	
D	=	crack depth	
t	=	shroud thickness	
a	=	vertical crack half length	

For this case, several geometries were analyzed, including shroud radii of 88-100 in and shroud thickness of 1.5-2.0 inches. A faulted ΔP value of 33 psi (includes 1.5 safety factor) was used.

The second approach uses a finite element analysis. A 90-degree shroud section was modeled, with a 45-inch half-crack segment in the vertical direction (no circumferential cracking). An internal pressure was applied to the model, and the model was run. The resulting stress intensities and displacements at the middle of the crack were noted. The model was then run again, this time with a part through crack in the circumferential segment which meets up with the vertical crack segment. It was determined that an increase in stress intensities and/or displacements at the middle of the crack of 10% from the original case (no circumferential crack) was significant. Therefore, the depth of flaw in the circumferential segment was increased in an iterative manner until the stress intensities and displacements at the middle of the crack were approximately 10% higher than they were with no circumferential part through cracking.

E.4.2 Limit Load Analysis

This analysis utilizes the principles of an infinite cylinder. For this case, the limit load can be expressed by the following relationship:

$$(SF)\ \sigma_h = \sigma_f / M \qquad \textbf{(Eq. E-6)}$$

where σ_h and σ_f are the hoop stress and flow stress, respectively, SF is the safety factor and M is the curvature correction factor, as defined in Equation E-5. Given that the hoop stress can be defined by

$$\sigma_h = PD_s/2(t-D) \qquad \textbf{(Eq. E-7)}$$

where:

P	=	Pressure
D_s	=	Diameter of shroud
t	=	thickness
D	=	allowable crack depth

Equation E-6 can be rearranged to determine the allowable crack depth (D):

$$D = t - ((SF) * (PD_s) * M / (2\sigma_f)) \qquad \textbf{(Eq. E-8)}$$

E.4.3 Results

[[

Content Deleted -
EPRI Proprietary Information

]] TS

[[

Content Deleted -
EPRI Proprietary Information

]] TS

E.5 References

E-1. ASME Boiler and Pressure Vessel Code, Section XI, Appendix C, American Society of Mechanical Engineers, 1989 Edition.

E-2. "BWR Vessel and Internals Project, BWR Core Shroud Inspection and Flaw Evaluation Guidelines, Revision 2 (BWRVIP-01)," EPRI Report TR-107079, October 1996.

F
EVALUATION OF VERTICAL WELD INDICATIONS

In the event that the acceptance standards in Sections 2 and 3 are not met, methods for the evaluation and dispositioning of flaws are required. This section describes the suggested procedures for evaluating indications found in the vertical welds. Different methods are proposed for varying degrees of cracking. For vertical weld indications that do not intersect a horizontal weld, the evaluation can be done using closed form solutions, assuming a free standing cylinder. For indications that intersect the horizontal welds, more extensive hand calculations are required.

The methodologies for the closed form solutions which cover a broad range of cracking scenarios are outlined in this section. For cracking scenarios which are not bounded by the cases presented here, evaluations will have to be performed on a plant-specific basis and may include more detailed hand calculations or finite element analyses.

The structural analyses described in this section consider both LEFM and limit load margins. The methodology is conservative, but consistent with BWRVIP-01 and NRC approved methods. The allowable axial flaw size is dependent only on the pressure stress. The analysis is applicable to both normal/upset and emergency/faulted conditions as long as the appropriate safety factor is used.

[[

Content Deleted -
EPRI Proprietary Information

]] TS

[[

Content Deleted -
EPRI Proprietary Information

]] TS

F.1 Vertical Weld Cracks that Do Not Intersect Circumferential Welds

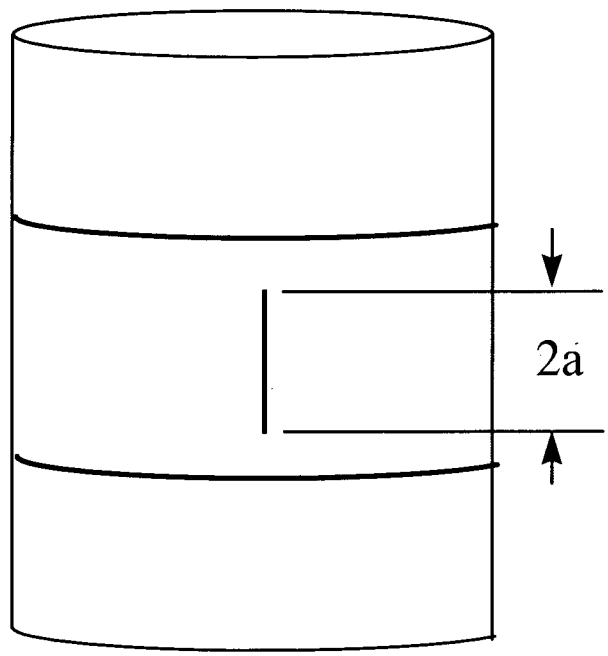

Figure F-1
Vertical Weld Cracks that Do Not Intersect Circumferential Welds

Assuming that there is no cracking in the vertical weld at the intersection with the horizontal weld (as shown in Figure F-1), the crack can be analyzed assuming an axial crack in a finite width cylindrical shell. In this case, the horizontal weld can be cracked since no credit is taken for the horizontal weld. Because the cylinder is finite in width, the allowable flaw size will always be smaller than the length of the weld. The allowable crack length is the lower of the two crack lengths determined considering LEFM and limit load assessments. For welds where the cumulative fluence is less than 3×10^{20} n/cm^2, the LEFM methodology is not required, and the limit load analysis alone can be used to determine allowable flaws. Both methodologies are provided in the following.

F.1.1 LEFM Analysis

The LEFM analysis is applicable for vertical welds where the cumulative fluence is in excess of 3×10^{20} n/cm^2. The allowable crack length corresponds to the length for which the stress intensity factor (including the safety factor) equals the conservative estimate of the available toughness, K_{IC}.

The stress intensity factor (including the safety factor) for an axial crack of length 2a, is given by:

[[

Content Deleted -
EPRI Proprietary Information

]] TS

The allowable flaw is determined by setting $K = K_{IC}$ in Equation F-1.

F.1.2 Limit Load Analysis

The allowable crack length (2a) considering limit load analysis is given by:

[[

Content Deleted -
EPRI Proprietary Information

]] TS

F.2 Vertical Weld Cracks that Intersect Circumferential Welds

The previous evaluation methodology dealt with indications in the vertical weld that do not intersect the horizontal weld. For the case of intersecting indications in the vertical and horizontal weld, the analyses are more extensive. Several methodologies can be used to assess vertical weld indications that intersect horizontal weld indications. These methodologies are outlined in the following sections.

F.2.1 360 Degree Through-Wall Flaw in Intersecting Circumferential Weld; Part Through-Wall Flaw in Vertical Weld

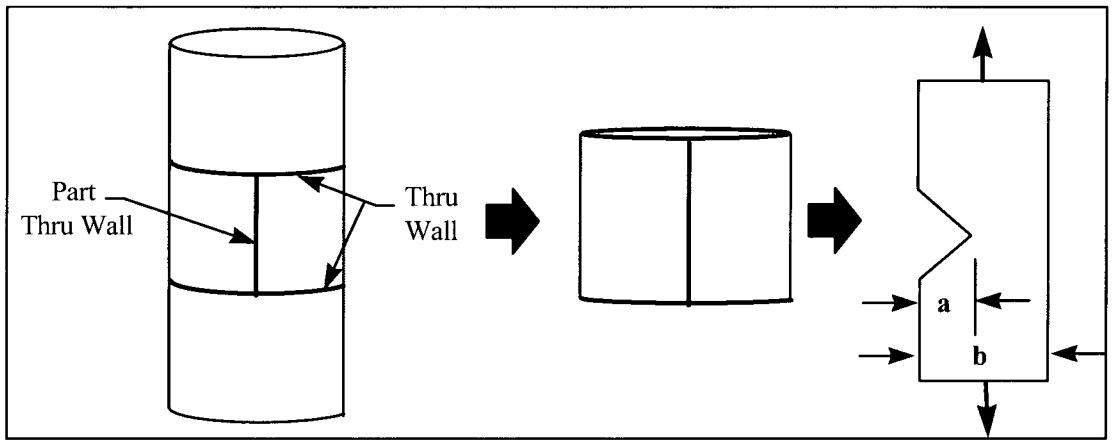

Figure F-2
360 Degree Through-Wall Flaw in Intersecting Circumferential Weld; Part Through-Wall Flaw in Vertical Weld

For this case (shown in Figure F-2), no credit is taken for the intersecting horizontal welds. This case is treated as a free standing cylinder. An additional conservative assumption in this case is that the entire vertical weld is assumed cracked to the average crack depth found in the vertical weld. As in the previous analysis, both the LEFM and limit load analysis is provided.

If a part of the crack is predicted to exceed through-wall at EOI, a more detailed plant specific analysis may be needed to demonstrate acceptability. This condition represents 'a compound crack' where there is a part through-wall with a through-wall segment as shown in Figure F-3.

F.2.1.1 LEFM Analysis

This analysis uses a K solution for a single-edge notch flat plate. For this case, the entire length of the vertical weld is assumed cracked to a uniform depth, a. The allowable crack depth corresponds to the depth for which the stress intensity factor (including the safety factor) equals the conservative estimate of the available toughness, K_{IC}.

The stress intensity factor (including the safety factor) for a single-edge notch of crack depth (a) is:

[[

Content Deleted -
EPRI Proprietary Information

]] TS

F.2.1.2 Limit Load Analysis

The allowable crack depth (a) based on limit load analysis is given by:

[[

Content Deleted -
EPRI Proprietary Information

]] TS

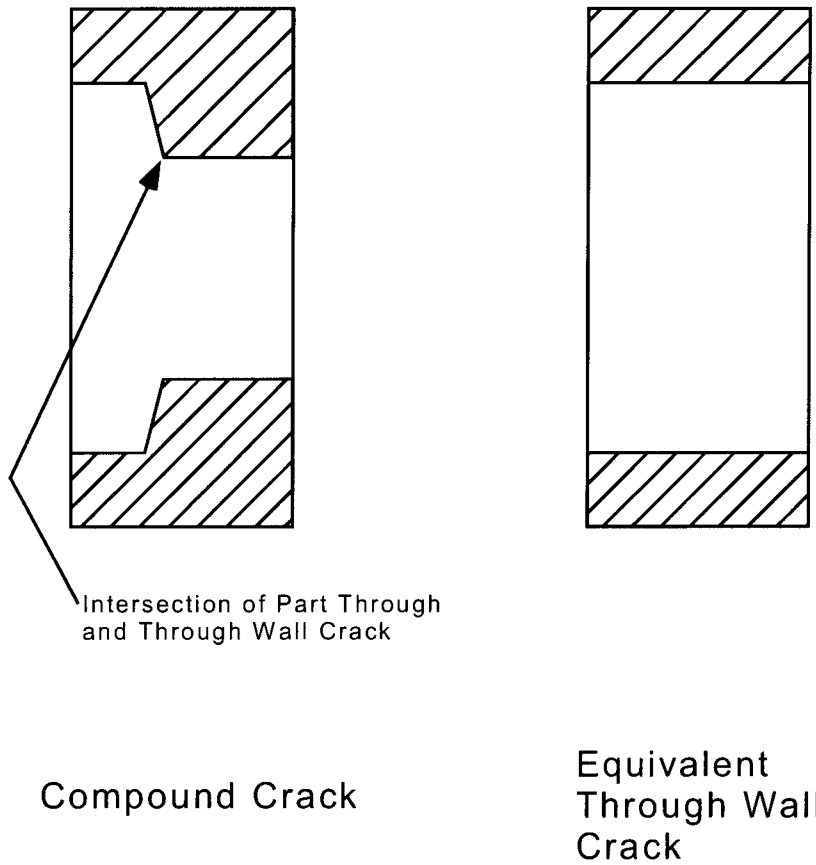

Figure F-3
Compound Crack

[[

Content Deleted -
EPRI Proprietary Information

]] TS

F.2.2 360 Degree Part Through-Wall Flaw in Circumferential Weld; Through-Wall Flaw in Intersecting Vertical Weld

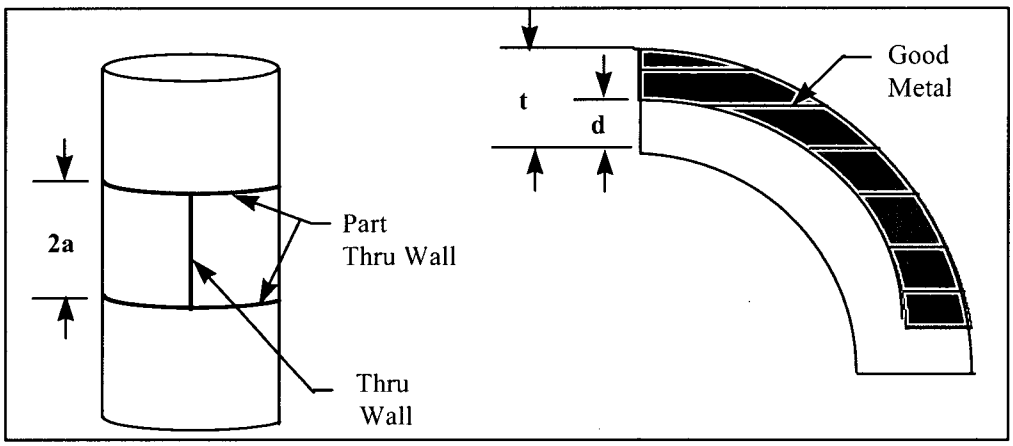

Figure F-4
360 Degree Part Through-Wall Flaw in Circumferential Weld; Through-Wall Flaw in Intersecting Vertical Weld

For this case, the entire horizontal weld is assumed to be cracked to a part through-wall depth. The vertical weld is assumed to be cracked through-wall. The LEFM and limit load analyses for this case is provided below.

F.2.2.1 LEFM Analysis

This analysis utilizes the principles of an infinite cylinder. However, because there is partial through-wall cracking in the intersecting horizontal weld, the hoop stresses are ratioed by the crack depth (to simulate a thinner cylinder). The LEFM formula becomes:

[[

Content Deleted -
EPRI Proprietary Information

]] TS

F.2.2.2 Limit Load Analysis

As in the LEFM analysis, this analysis utilizes the principles of an infinite cylinder. For this case, the limit load can be expressed by the following relationship:

[[

Content Deleted -
EPRI Proprietary Information

]] TS

F.3 Leakage

To this point, the flaw evaluation has outlined the analyses used to evaluate the structural margin of the flaw indications. If through-wall cracking in a vertical weld is observed during an inspection, leakage from vertical welds must also be evaluated. (Note that this evaluation is required only if the cracking is observed to be through-wall. It is not required if the cracking is merely projected to grow through-wall.) This section outlines the methodology for calculating the leakage through a longitudinal crack.

[[

Content Deleted -
EPRI Proprietary Information

]] TS

[[

Content Deleted -
EPRI Proprietary Information

]] TS

[[

Content Deleted -
EPRI Proprietary Information

]] TS

Figure F-5
Leak Rate vs. Axial Crack Length

[[

Content Deleted -
EPRI Proprietary Information

]] TS

F.4 Flaw Evaluation Assumptions for Cracking in Uninspected Regions

In performing plant specific evaluations, assumptions must be made regarding the amount of cracking in uninspected regions of the weld. For purposes of these evaluations, the defect rates shown in Table F-1 should be assumed. The table shows the length of cracking that should be assumed in the uninspected region as a function of the length observed in the inspected region. It is important to note that when using Table F-1 the depth of the assumed cracking in the uninspected region should be set equal to the average crack depth of the observed cracks in the inspected region. In other words, the average crack depth should be based on only that portion of the weld that was inspected and found to be cracked. The average crack depth should not be computed based on inspected lengths where no cracking was observed.

The values given in Table F-1 are based on a probabilistic estimate of the amount of cracking that could occur in the uninspected region. The analysis assumes that the mean defect rate in the uninspected region is equal to that observed in the inspected region and calculates a defect rate that would not be exceeded. Details of the analysis are provided in Appendix H.

Table F-1
Defect Rates in Uninspected Regions of Core Shroud Vertical Welds

[[

Content Deleted -
EPRI Proprietary Information

]] TS

[[

Content Deleted -
EPRI Proprietary Information

]] TS

F.5 Conclusions

The methodologies presented in this section provide closed form solutions to evaluate cracking in a vertical weld. The methodologies differ according to the severity of the cracking in the vertical weld. It should be noted that in some cases, due to the severity of cracking in the vertical weld, the simplified solutions will not yield acceptable results. For these cases, more detailed, plant specific finite element analyses may be used. Guidance on performing these detailed analyses is provided in Section F.6.

F.6 Plant Specific Flaw Evaluation Methodology

This section provides additional guidelines and fundamental criteria for plant specific flaw evaluation outside the bounds of the three cases presented in the previous sections of this Appendix.

The closed form solutions presented in above ensure that the vertical welds satisfy three basic criteria:

[[

Content Deleted -
EPRI Proprietary Information

]] TS

Some examples of the application of plant specific analyses follow.

[[

Content Deleted -
EPRI Proprietary Information

]] TS

F.7 References

F-1. Hiroshi Tada and Paul C. Paris, "Application of Fracture Proof Design Methods Using Tearing Instability Theory to Nuclear Piping," NUREG/CR 3464, September 1983.

F-2. Hiroshi Tada, Paul C. Paris, and George R. Irwin, "The Stress Analysis of Cracks Handbook - Second Edition," Paris Productions Incorporated, St. Louis, Missouri, 1985.

F-3. Letter from Jack Fox to Keith Wichman of USNRC, ANS-58.2 Working Group Comments on NUREG-1061 Volume 3, April 22, 1985.

F-4 "BWRVIP-80-A: BWR Vessel and Internals Project, Evaluation of Crack Growth in BWR Shroud Vertical Welds," EPRI Technical Report 1015457, October 2007.

G
PROXIMITY RULES FOR PLANT-SPECIFIC FLAW EVALUATION

This Appendix describes the flaw proximity rules that can be used to determine the effective flaw lengths from the shroud inspection data. The rules specifically treat the horizontal welds.

G.1 Determination of the Effective Flaw Length

The effective flaw lengths are based on ASME Code, Section XI proximity criteria as presented in Subarticle IWA-3300. Indications are considered to be in the same plane if the perpendicular distance between the planes is less than two times the shroud thickness (2T). When two indications are close to each other, rules are established to combine them based on proximity. These rules are described here.

G.2 Proximity Rules

The flaw combination methodology used here is based on the ASME Code, Section XI proximity rules concerning neighboring indications. Under the rules, if two surface indications are in the same plane and are within two times the depth of the deepest indication, then the two indications must be considered as one indication.

[[

Content Deleted -
EPRI Proprietary Information

]] TS

[[

Content Deleted -
EPRI Proprietary Information

]] TS

Table G-1
Flaw Combinations Considered in Proximity Criteria

[[

Content Deleted -
EPRI Proprietary Information

]] TS

Case B: Circumferential Flaw - Axial Flaw

This case applies when both a circumferential and an axial flaw are being considered. Figure G-3a demonstrates this condition. [[

Content Deleted -
EPRI Proprietary Information

]] TS

G.3 Application of Effective Flaw Length Criteria

The application of the effective length criteria is applied to two adjacent indications at a time. Figure G-4 is a schematic which illustrates the process. For example, using the 0° azimuth as the starting location for a horizontal weld or plane, the general procedure would be as follows:

[[

Content Deleted -
EPRI Proprietary Information

]] TS

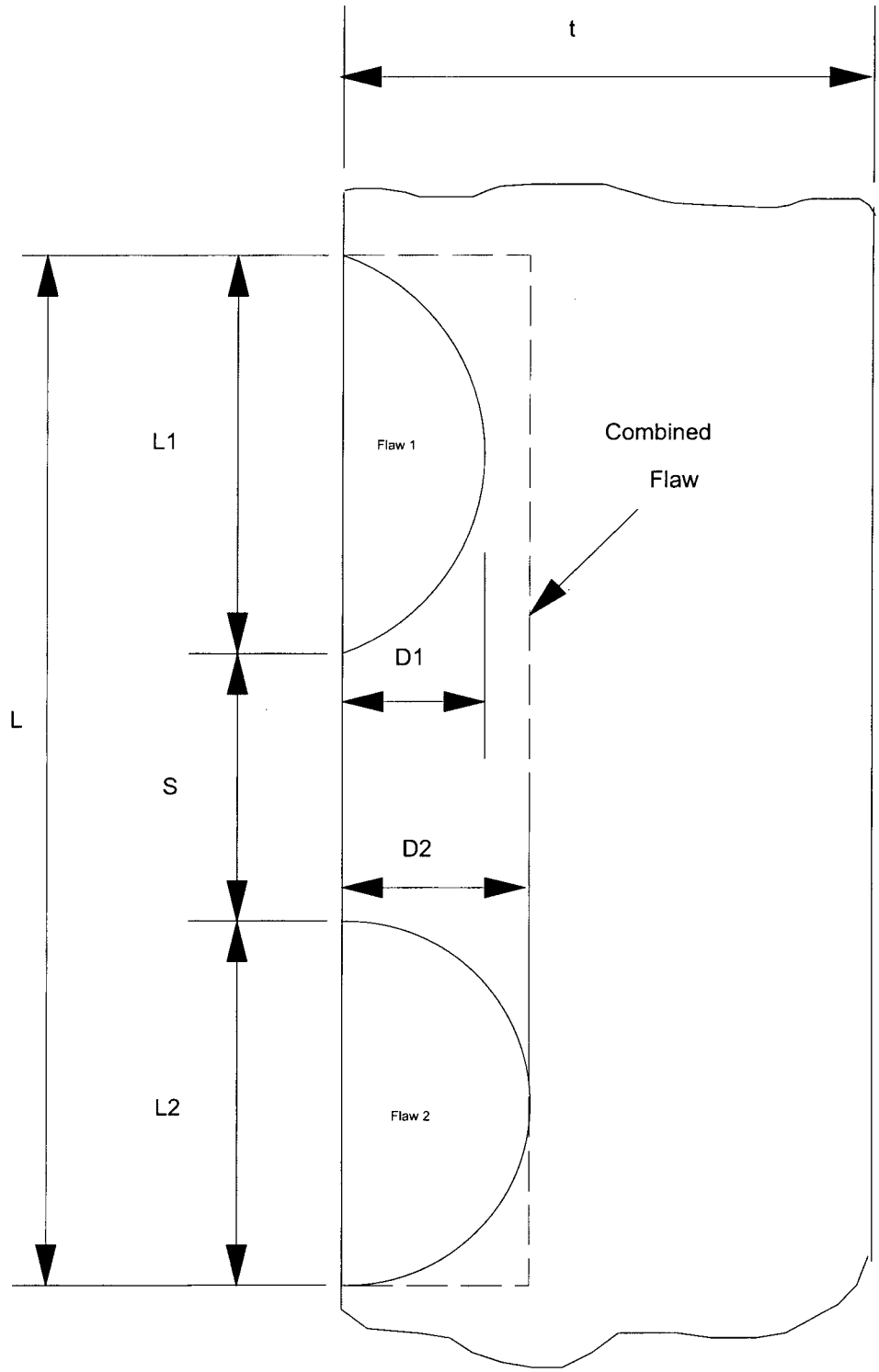

Figure G-1
ASME Code Proximity Criteria

(a)

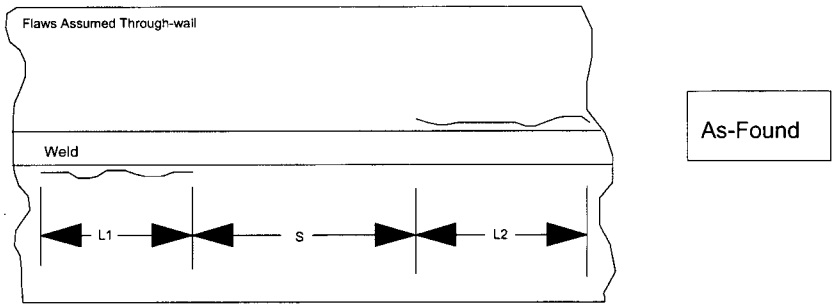

[[

Content Deleted -
EPRI Proprietary Information

]] TS

Figure G-2
Application of Proximity Procedure to Neighboring Circumferential Flaws

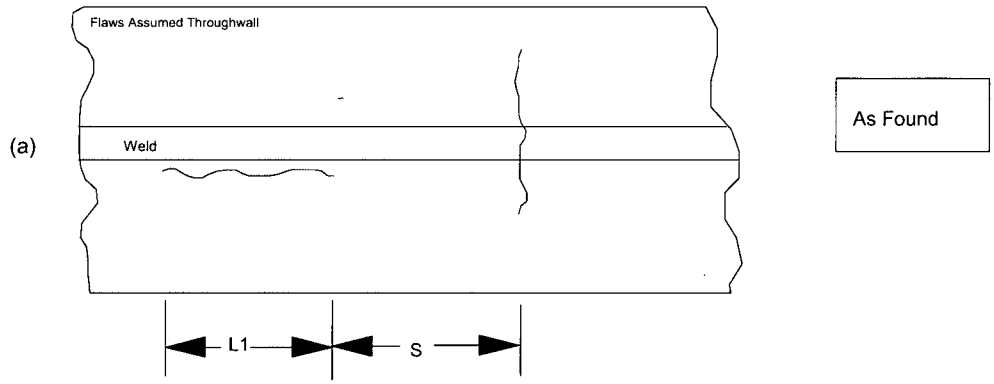

[[

Content Deleted -
EPRI Proprietary Information

]] TS

Figure G-3
Application of Proximity Procedure to Neighboring Axial and Circumferential Flaws

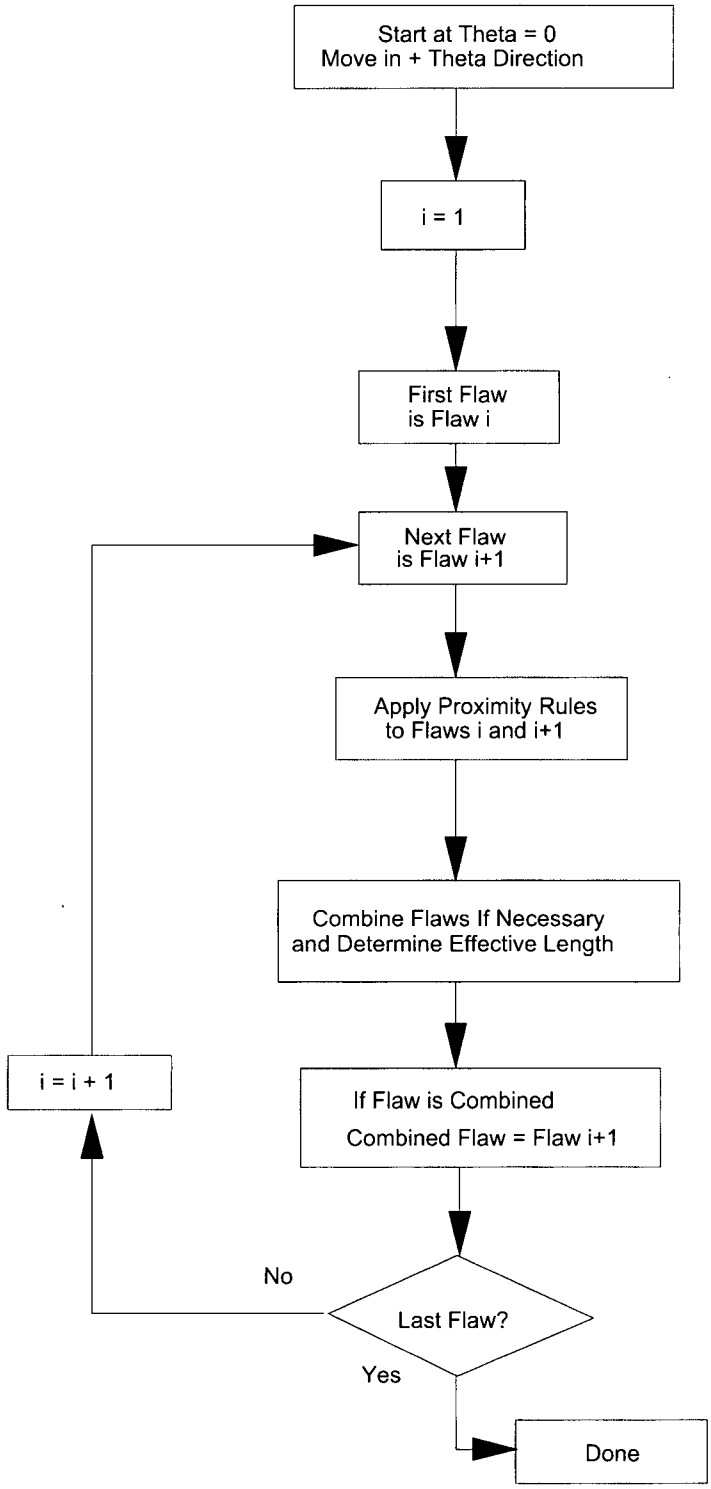

Figure G-4
Process for Determining Effective Circumferential Flaw Length

H

A STATISTICAL METHOD FOR ESTIMATING THE CRACKING IN INACCESSIBLE REGIONS OF CORE SHROUD WELDS

H.1 Introduction

Stress corrosion cracking (SCC) has been found in core shroud welds at several U.S. and foreign BWRs (Figure H-1). As a result, the NRC has required BWR licensees to perform inspections of the core shroud horizontal welds. BWRs have been categorized by the BWRVIP into Categories A, B, or C depending on their relative susceptibility to core shroud cracking, with Category A being the least susceptible to cracking and Category C being the most susceptible.

For Category C plants, the BWRVIP inspection criteria require a 100 percent inspection of the accessible regions of each circumferential weld. At most plants, a portion of each weld is inaccessible for inspection due to interferences with other vessel internal structures, e.g., core spray downcomer piping, shroud head bolt lugs, and jet pumps. The inaccessible regions generally range from 5 to 50 percent of the weld circumference depending on the weld.

Initial evaluations assumed that inaccessible regions of the core shroud weld are fully (100 percent) cracked. For core shroud welds with significant cracking, this is a reasonable (and conservative) assumption. However, for core shroud welds with minor or no cracking in the inspected regions, this assumption is not realistic and could lead to unnecessary actions, particularly if the inaccessible region is large.

A statistical method has been developed for estimating the cracking in inaccessible regions of the core shroud welds based on the inspection results in the accessible regions. The method assigns a defect rate (percent cracking) in inaccessible regions with a 95 percent confidence level. That is, there is a 95 percent confidence that the actual cracking rate in inaccessible regions will be less than or equal to the assigned defect rate. As discussed in the remainder of this appendix, the assigned defect rate in inaccessible regions is a function of the observed defect rate in the inspected regions and the arc length of the inaccessible region in question.

H.2 Methodology

H.2.1 Assumptions

The methodology for estimating the defect rate in inaccessible regions of core shroud welds is based on the following two assumptions:

[[

Content Deleted -
EPRI Proprietary Information

]] TS

H.2.2 Example

Babe Ruth averaged one home run for every 13 at bats over his career (i.e., $\theta = 1/13 = 0.0769$). Assuming four at bats per game, the probability of the "Babe" hitting one home run in a game was:

$$P(x=1) = \frac{4!}{1!\,3!} \times 0.0769^1 \times (1-0.0769)^3 = 0.242 \qquad \textbf{(Eq. H-1)}$$

(Once every 4.13 games)

And the probability of him hitting two home runs in a game was:

$$P(x=2) = \frac{4!}{2!\,2!} \times 0.0769^2 \times (1-0.0769)^2 = 0.0302 \qquad \textbf{(Eq. H-2)}$$

(Once every 33.1 games)

H.3 Results of Analyses for Core Shroud Welds

The above methodology was applied to inaccessible regions of the core shroud welds in order to estimate the degree of cracking in inaccessible regions. Calculations were performed for assumed inaccessible arc lengths from 2.5 to 50 percent of the total circumference of the weld (9 to 180 degrees), and assumed weld defect rates from 10 to 90 percent. The method of calculation was as follows.

[[

Content Deleted -
EPRI Proprietary Information

]] TS

Results of the calculation are presented graphically in Figure H-3. Figure H-3 is a plot of the 95 percent confidence level defect rate in the inaccessible regions as a function of the uninspected arc length for assumed defect rates of 10, 25, 37.5, 50, 62.5, 75, and 90 percent.

Figure H-3 provides a convenient graphical method to assign a defect rate to inaccessible regions of the core shroud welds based on the defect rate in the inspected region and the length of the inaccessible region. Bounding values from Figure H-3 are tabulated in Table H-1.

Two observations are noted in reviewing Table H-1. The first observation is obvious; the second observation is less obvious:

[[

Content Deleted -
EPRI Proprietary Information

]] TS

Table H-1
Defect Rates in Inaccessible Regions of Core Shroud Welds

[[

Content Deleted -
EPRI Proprietary Information

]] TS

H.4 Example Problem

The following example illustrates how Table H-1 can be used to calculate the length of flawed material in inaccessible regions in a core shroud weld with SCC. Consider a typical H5 weld shown in Figure H-4. The inspected region was 60 percent of the circumference of the weld (i.e., 40 percent of the weld circumference was inaccessible for inspection). A total of six flaws were found in the inspected regions. The sum of the flaw lengths was equal to 20 percent of the inspected length. The core shroud was fabricated from Type 304L stainless steel and the accumulated neutron fluence at H5 has been less than 3×10^{20} n/cm^2. The faulted stress level at H5 is 3 ksi membrane stress.

[[

Content Deleted -
EPRI Proprietary Information

]] TS

[[

Content Deleted -
EPRI Proprietary Information

]] TS

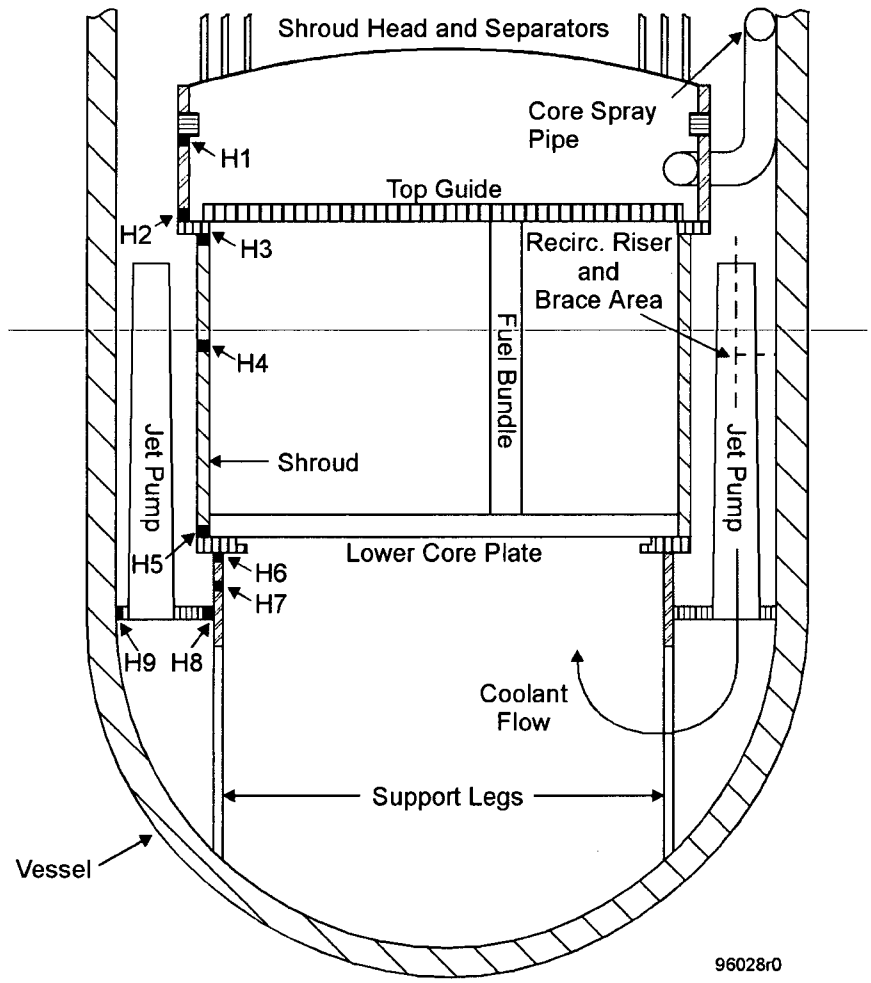

Figure H-1
Typical BWR Core Shroud

[[

Content Deleted -
EPRI Proprietary Information

]] TS

Figure H-2
Example Excel Spreadsheet Calculation

[[

Content Deleted -
EPRI Proprietary Information

]] TS

Figure H-3
Defect Rate in Inaccessible Region vs. Length of Inaccessible Region as a Function of Defect Rate in Inspected Region

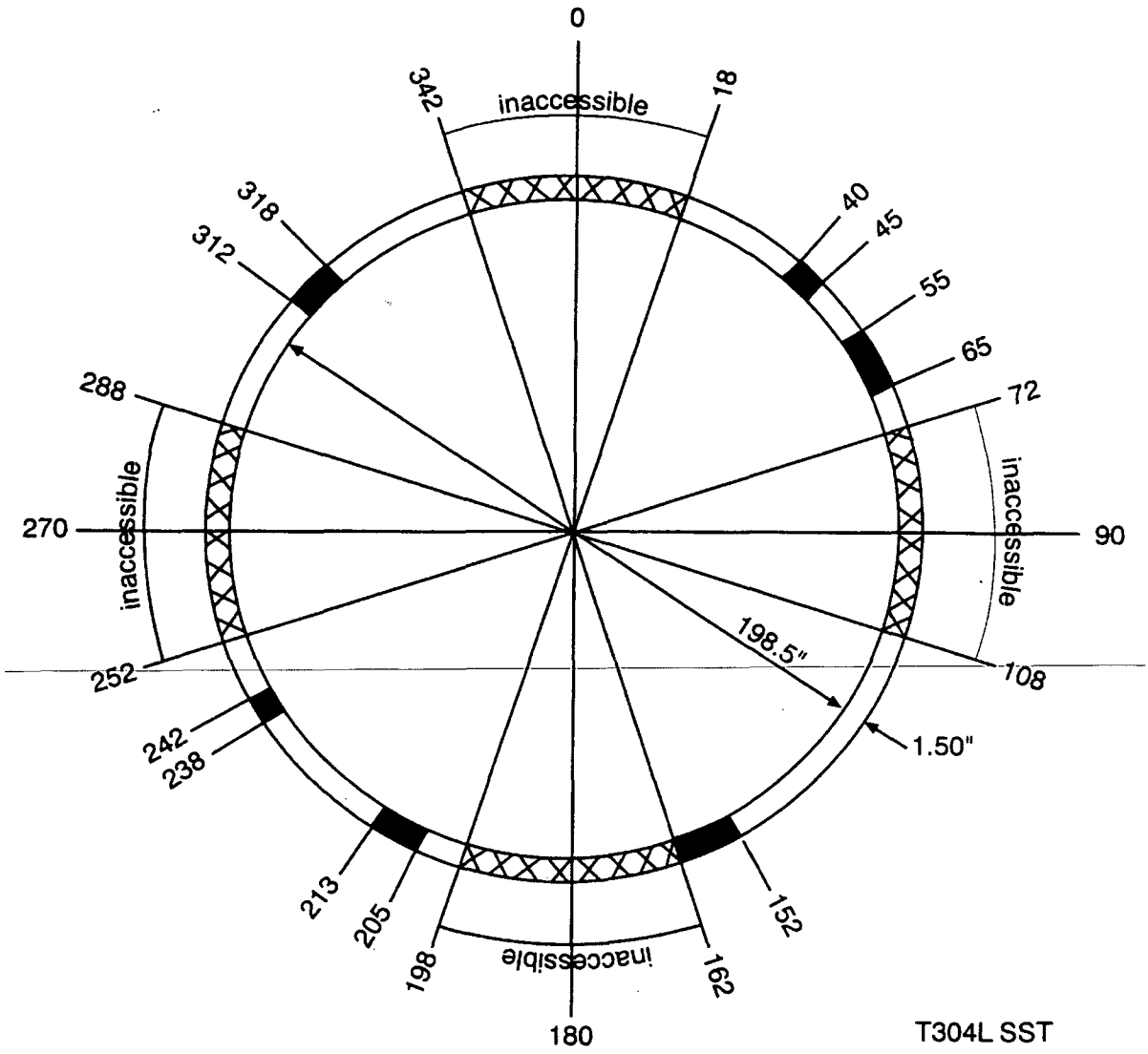

Figure H-4
Typical Core Shroud Weld H5

I
CALCULATION OF AVERAGE CRACK DEPTH

This appendix provides an example of the calculation of "average crack depth at EOI (End of Interval)" as defined in Sections 2 and 3.

Assume the following:

Total length of weld	90"
Inspected length (L_t)	50"
Shroud thickness	2"
EOI	6 years (8760 hot-operating hr/year assumed)

Cracks observed (L_i, d_i):

Crack	Length (in)	Depth (in)
1	12	0.2
2	8	0.1 to 0.2
3	6	1.0

[[

Content Deleted -
EPRI Proprietary Information

]] TS

So the cracks at EOI will be as follows:

[[

Content Deleted -
EPRI Proprietary Information

]] TS

J
USE OF FILLET WELD FOR ESTABLISHING ALLOWABLE FLAW DEPTH

J.1 Issue

Complete circumferential cracking at varying depths has been observed in 304 stainless steel shrouds in the top guide support ring H3 weld region and the core plate support ring H5 weld region in several BWRs. Such cracking has been mainly in the welded plate rings and has been attributed to a combination of cold work and unfavorable end grain orientation. Figure J-1 shows typical cracking observed in the ring. In most cases, the ring is welded to the shroud cylinder with a full penetration weld and a fillet weld. The fillet weld is important, not from the perspective of strength contribution, but from crack growth considerations. Credit is not taken for the fillet weld when determining the stresses which apply at a given location. However, since cracking in the rings is expected to follow the weld heat affected zone, the total crack extension that can be tolerated before the crack leads to shroud separation is the shroud wall thickness, t_{shroud}, plus the length of the fillet weld leg, t_{fillet}. Finite element analysis has shown that with the crack extending parallel to the plane of the ring, the required wall ligament is less than 10% of the total available length. Justification for crack growth extending into the region between the fillet weld and ring improves a plant's ability to accommodate the multiple conservatisms in the analysis done assuming the presence of a 360° flaw.

J.2 Crack-Free Fillet Weld Confirmation

Microstructurally, the weld metal is expected to be significantly more resistant to SCC initiation and growth than the base material HAZ. Field experience with shroud cracking confirms this. In order to take credit for the presence of a fillet weld, confirmation by inspection is needed to accomplish two things:

[[

Content Deleted -
EPRI Proprietary Information

]] TS

[[

Content Deleted -
EPRI Proprietary Information

]] TS

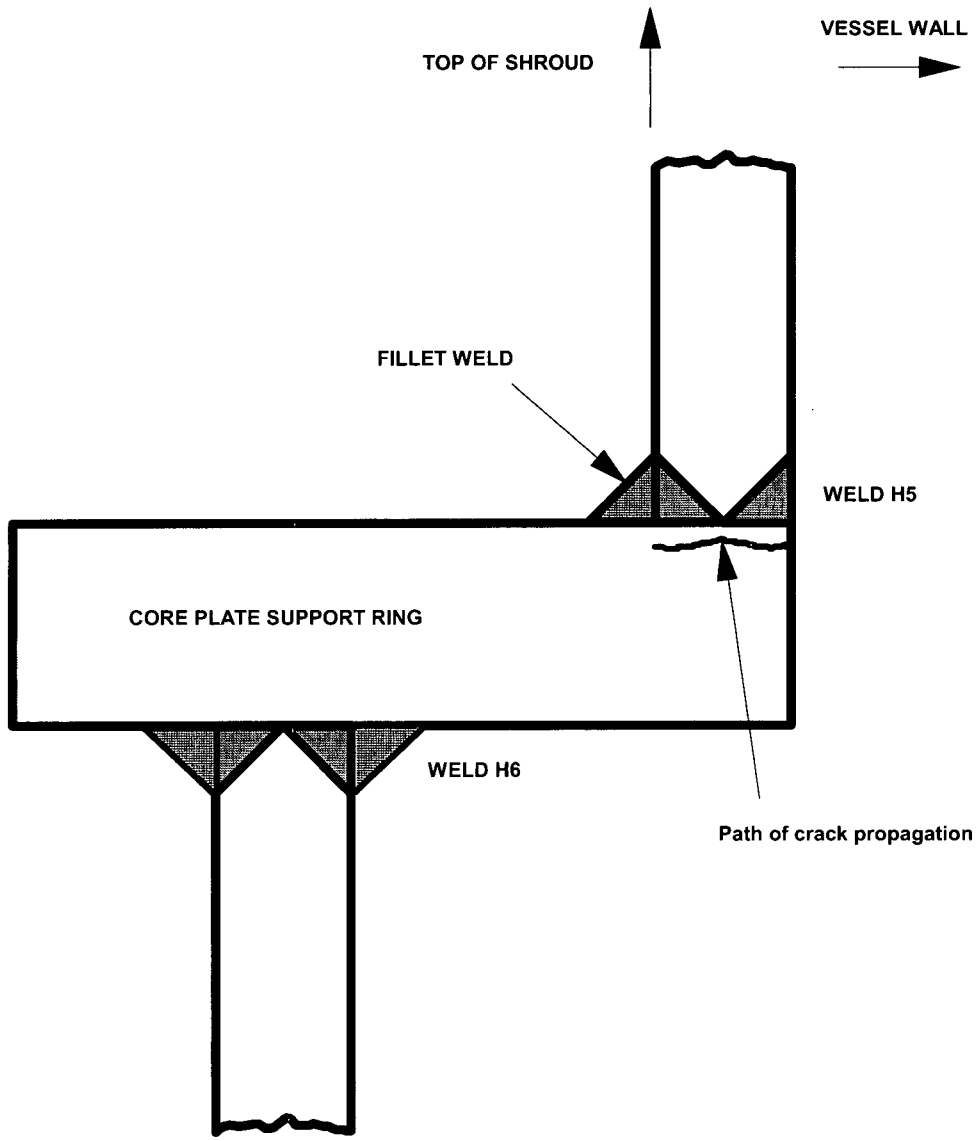

Figure J-1
Schematic of Anticipated Crack Growth in Shroud Ring

K

GUIDELINES FOR INSPECTION OF BWR CORE SHROUDS: DEMONSTRATION OF COMPLIANCE WITH THE TECHNICAL INFORMATION REQUIREMENTS OF THE LICENSE RENEWAL RULE (10 CFR 54.21)

The purpose of Appendix D is to demonstrate that the inspection guidelines provide the necessary information to comply with the technical information requirements pursuant to paragraphs 54.21[a] and [c], and 54.22, and the NRC's findings under 54.29[a] of the license renewal rule (Reference K.8.[1]). It is intended that the NRC's review and approval of Appendix K will allow utilities the option to incorporate the inspection guidelines and this Appendix by reference in a plant-specific integrated plant assessment (IPA) and time-limited aging analysis (TLAA) evaluation. If a license renewal applicant confirms that the latest version of the inspection guidelines reviewed by the NRC applies to their plant's current licensing basis (CLB), and that the results of the Appendix D IPA and TLAA evaluations are in effect at their plant, then no further review by the NRC of the matters described herein is needed.

K.1 Description of the BWR Core Shroud and Intended Functions

The core shroud is typically composed of three cylindrical shell sections and three rings. The three rings are the shroud head flange, top guide support ring and core plate support ring. The top cylindrical shell connects the shroud head flange to the top guide support ring. The longest cylindrical portion connects the top guide support ring to the core plate support ring. The bottom cylindrical shell connects the core plate support ring to the shroud support cylinder. The shroud support legs are located at the bottom of the shroud support cylinder (a few plants use cantilever supports rather than support legs). A typical core shroud assembly is shown in Figure 1-1 of the inspection guidelines. There are variations in the number of welds with the different plant designs. The design, materials, operating, environmental, and other technical information is contained in Appendices A and B.

The core shroud is required to ensure the capability to shut-down the reactor and maintain it in a safe shut-down condition (54.4(a)(1)(ii)) and prevent or mitigate the consequences of accidents that could result in potential offsite exposure comparable to 10 CFR 100 guidelines (54.4(a)(1)(iii)). Therefore, the intended functions for the core shroud are to:

1. Provide a partition to separate the upward flow of the coolant through the core from the downward recirculation flow;
2. Maintain fuel alignment such that control rods can be inserted; and
3. Form part of the boundary to maintain water level in the core after a LOCA.

The intended functions are preserved under normal, upset, emergency, and faulted conditions Appendix D.6 identifies the safety factors that need to be considered to determine that stress levels for the various operating conditions are consistent with the CLB. The applied loads and load combinations are described in the BWR Vessel and Internals Project Document No. BWRVIP-02.

K.2 Core Shroud Components Subject to Aging Management Review

Paragraph 54.21(a)(1) of the rule provides the requirements for identifying the core shroud components that are subject to aging management review. To satisfy the requirements of 54.21(a)(1), the guidance provided in the NEI industry guideline (Reference K.8.[2]) was used to identify the passive components and then to identify those that are long-lived. For the core shroud, a screening methodology was not needed to make these determinations. All of the components in the core shroud assembly are passive and long-lived. Therefore, the complete core shroud assembly (see Figure 1-1) is subject to aging management review. The aging management review of the shroud head flange bolted connection is included in the review of the top guide assembly.

K.3 Management of Aging Effects (54.21[a][3])

(a) Description of Aging Effects

For the purpose of this Appendix, the BWR Reactor Pressure Vessel Industry Report (Reference K.8.[3]) and the responses to the NRC's questions on the Industry Report are used to identify the aging mechanisms for the core shroud. Aging mechanisms are the causes of the aging effects. The NUREG 1557 (Reference K.8.[4]) is used to establish the correlation between the aging effects and their associated aging mechanisms. If the industry report concludes that the aging mechanism is significant, then the associated aging effect is included in this aging management review. Using this methodology, it was determined that crack initiation and growth, due to stress corrosion cracking, is the only aging effect that requires aging management review for the core shroud. This conclusion is consistent with the scope and intent of the reinspection guidelines.

The causes of the stress corrosion cracking and a susceptibility assessment for the core shroud (including fabrication history, water chemistry, material carbon content, neutron fluence and hot operating time) are provided in Appendix B.1. Based on the susceptibility considerations described in Appendix B.1, the various BWR shrouds are placed in three categories (from highest to lowest susceptibility). The categories consider the material specification (Type 304 or 304L), method of fabrication (welded plate rings or forged rings), and operating history relative to coolant conductivity.

(b) Assessment of Aging Effects and Programs

Inspection of Un-repaired Core Shrouds

As discussed in Section 2, the extent of inspection required for a given plant is determined based on three susceptibility factors which can be readily evaluated: hot operating time, conductivity and shroud material type and fabrication features. The three "condensed" categories (A, B and C) defined in Figure 2-1 were used in the shroud inspections and flaw evaluations. Eventually all shroud inspections, and plants demonstrating compliance with the requirements of the license renewal rule, will be inspected to the inspection criteria for categories B or C.

Category B provides the inspection requirements for plants with 304 or 304L shroud material, and with average conductivity for the first five fuel cycles at or below the value of 0.30μS/cm. A Category B plant has some limited, but low, potential for shroud cracking. Welds chosen for inspections are representative of those in each region where significant cracking has occurred. The length of weld to be inspected is specified in Section 2 of the inspection guidelines. The reinspection intervals are given in Table 2-1. Section 2 of the inspection guidelines describes an inspection strategy and acceptance criteria that is based on the length of weld inspected. The required corrective action, if the criteria are exceeded, is also described in Section 2. The Category B inspection strategy and optional strategies are shown in Figure 2-2.

Category C provides the inspection requirements for plants with 304 shroud material with greater than six hot operating years, regardless of conductivity, and 304L shroud material with greater than eight hot operating years and average conductivity greater than 0.30μS/cm for the first five fuel cycles. Plants in this category are considered more susceptible to shroud cracking due to high carbon content of the material and/or poor conductivity during the first five cycles of operation. The length of weld to be inspected is specified in Section 2 of the inspection guidelines. The reinspection intervals are given in Table 2-1. The Category C inspection strategy and the optional strategies are shown in Figure 2-3.

As described in Section 2.3, there are other welds and welded components attached to the shroud, such as vertical welds and ring segment welds. The supporting technical basis for inspection of these welds is further evaluated in the inspection guidelines. The inspection criteria for vertical welds are shown in Figure 2-4 and 2-5.

Reinspection of Repaired Core Shrouds

Section 3.0 of the inspection guidelines addresses the inspection requirements for weld in repaired core shrouds. Inspection is intended to provide periodic confirmation of the integrity of the repaired shroud. The licensee is required develop an inspection program incorporating the requirements of the inspection guidelines. In addition, the program shall consider the repair vendor recommendations, industry experience, aging effects, and the critical components and features of the repair design.

(c) Demonstration that the Effects of Aging are Adequately Managed

Crack initiation and growth, due to stress corrosion cracking, is the only aging effect for the core shroud that requires aging management review for license renewal. This aging effect will be managed by incorporating the inspection strategies described in Section 2.0 (un-repaired shrouds) and Section 3.0 (repaired shrouds), when appropriate, in the plant specific inspection plans. The strategies are based on current knowledge of the shroud cracking issue and inspection experience at various plants. It provides a staged approach with respect to the inspection effort and associated analyses that are logically expanded, as necessary, to confirm the core shroud structural integrity. As more inspections are performed, specific aspects of implementing the inspection strategy may be further refined and incorporated in the plant specific inspection plans.

Implementation of the inspection strategy provided in the inspection guidelines and the resulting plant specific inspection plans during the extended operating period will provide a verification of the core shroud structural integrity requirements. Therefore, there is reasonable assurance that crack initiation and growth will be adequately managed so that the intended functions of the core shroud will be maintained consistent with the CLB in the extended operating period.

K.4 Time Limited Aging Analyses (54.21[c][1])

The six criteria contained in the NEI industry guideline (Reference K.8.[2]) were applied to identify the time limited aging analysis (TLAA) issues. That is, those calculations and analyses that:

1. Involve the core shroud assembly
2. Consider the effects of aging
3. Involve time-limited assumptions defined by the current operating term
4. Were determined to be relevant in making a safety determination
5. Involved conclusions or provide the basis for conclusions related to the capability of the core shroud to perform its intended function, and
6. Are incorporated or contained by reference in the CLB.

The generic fracture mechanics analyses described in Appendix D of the inspection guidelines are used to determine inspection intervals for core shrouds. The methodology and assumptions used in these analyses result in the following potential TLAA issues. The applicant may be required to evaluate these issues in a plant-specific analysis.

- The length of time evaluated in the analyses.
- LEFM is required if specified fluence level threshold values are exceeded during the extended operating period.
- The effects of BWR industry operating experience on the number of postulated flaws assumed in the analyses.
- The applicable crack growth rates are shown to be greater than 5×10^{-5} in/hr.

If a plant-specific analysis identified by an applicant meets all six criteria above, then this analysis will be considered a TLAA for license renewal and evaluated by the applicant. At a minimum, the plant-specific analyses of the core shroud for fatigue will be reviewed by the applicant to determine if the TLAA criteria apply.

K.5 Exemptions (54.21[c][2])

Exemptions associated with the core shroud that contain TLAA analysis issues will be identified and evaluated for license renewal by individual applicants.

K.6 Technical Specification Changes or Additions (54.22)

There are no generic changes or additions to technical specifications associated with the core shroud as a result of this aging management review to ensure that the effects of aging are adequately managed. Individual applicants will identify plant-specific changes.

K.7 Demonstration that Activities will Continue to be Conducted in Accordance with the CLB (54.29[a])

Sections K.1, K.2, and K.3 address the requirements 54.21(a) of the rule. The core shroud components that are subject to aging management review are identified and it is demonstrated that the effects of aging are adequately managed.

Sections K.4 and K.5 address the requirements of 54.21(c) of the rule. Plant-specific time limited aging analyses (TLAAs) and exemptions that require evaluation will evaluated by the applicant.

Section K.6 addresses the requirements of 54.22 of the rule. There are no generic technical specification changes or additions necessary to manage the effects of aging for the core shroud during the period of extended operation.

Therefore, actions have been identified and have been or will be taken by utilities with BWR plants, such that there is reasonable assurance that the activities authorized by license renewal for the core shroud will continue to be conducted in accordance with the CLB.

K.8 References

1. Title 10 of the Code of Federal Regulations, Part 54, "Requirements for License Renewal of Operating Licenses for Nuclear Power Plants,"(60 Federal Register 22461), May 8, 1995.

2. Nuclear Energy Institute Report NEI 95-10 (Rev. 0), Industry Guideline for Implementing the Requirements of 10 CFR Part 54 the License Renewal Rule.

3. NUMARC 90-03, BWR Reactor Pressure Vessel Internals License Renewal Industry Report, Revision 1, June 1992.

4. NUREG 1557, Summary of Technical Information and Agreements from Nuclear Management and Resources Council Industry Reports Addressing License Renewal, October 1996.

L
NRC REQUEST FOR ADDITIONAL INFORMATION

2004-263A

UNITED STATES
NUCLEAR REGULATORY COMMISSION
WASHINGTON, D.C. 20555-0001

July 9, 2004

Bill Eaton, BWRVIP Chairman
Entergy Operations, Inc.
Echelon One
1340 Echelon Parkway
Jackson, MS 39213-8202

SUBJECT: REQUEST FOR ADDITIONAL INFORMATION - REVIEW OF THE BOILING WATER REACTOR VESSEL AND INTERNALS PROJECT REPORT, BWRVIP-76, "BOILING WATER REACTOR CORE SHROUD INSPECTION & FLAW EVALUATION GUIDELINES"

Dear Mr. Eaton:

By letter dated September 23, 2002, you submitted for NRC staff review, Electric Power Research Institute (EPRI) proprietary report, BWRVIP-76, "Boiling Water Reactor Core Shroud Inspection & Flaw Evaluation Guidelines." The purpose of this report is to provide generic acceptance standards and inspection intervals for horizontal and vertical welds in repaired and unrepaired core shrouds, and procedures for determining plant-specific inspection intervals when the generic acceptance standards are not applicable. The report also includes generic inspection intervals and acceptance standards for radial ring welds, repair hardware and repair anchorages in repaired core shrouds.

The NRC staff has completed its initial review of the BWRVIP-76 report. As indicated in the attached request for additional information, the NRC staff has determined that additional information is needed to complete the review. If you have any questions, please contact Meena Khanna at (301) 415-2150.

Sincerely,

Matthew A. Mitchell, Acting Chief
Vessels & Internals Integrity and Welding Section
Materials and Chemical Engineering Branch
Division of Engineering
Office of Nuclear Reactor Regulation

Project No. 704

Enclosure: As stated

cc: BWRVIP Service List

cc:

Tom Mulford, EPRI BWRVIP
Integration Manager
Raj Pathania, EPRI BWRVIP
Mitigation Manager
Ken Wolfe, EPRI BWRVIP
Repair Manager
Larry Steinert, EPRI BWRVIP
Electric Power Research Institute
P.O. Box 10412
3412 Hillview Ave.
Palo Alto, CA 94303

Robin Dyle, Technical Chairman
BWRVIP Integration Committee
Southern Nuclear Operating Co.
42 Inverness Center Parkway (M/S B234)
Birmingham, AL 35242-4809

George Inch, Technical Chairman
BWRVIP Assessment Committee
Constellation Nuclear
Nine Mile Point Nuclear Station (M/S ESB-1)
348 Lake Road
Lycoming, NY 13093

Denver Atwood, Technical Chairman
BWRVIP Repair Focus Group
Southern Nuclear Operating Co.
Post Office Box 1295
40 Inverness Center Parkway (M/S B031)
Birmingham, AL 35242-4809

William C. Holston, Executive Chairman
BWRVIP Integration Committee
Constellation Generation Group
Nine Mile Point Nuclear Station
P. O. Box 63
Lycoming, NY 13093

Jeff Goldstein, Technical Chairman
BWRVIP Mitigation Committee
Entergy Nuclear NE
440 Hamilton Ave. (M/S K-WPO-11c)
White Plains, NY 10601

Jim Meister, BWRVIP Vice-Chairman
Exelon Corp.
Cornerstone II at Cantera
4300 Winfield Rd.
Warrenville, IL 60555-4012

Dale Atkinson, BWRVIP Liason tc EPRI
Nuclear Power Council
Energy Northwest
Columbia Generating Station (M/S PEO8)
P. O. Box 968
Snake River Complex
North Power Plant Loop
Richland, WA 99352-0968

Al Wrape, Executive Chairman
BWRVIP Assessment Committee
PPL Susquehanna, LLC
2 N. 9th St.
Allentown, PA 18101-1139

Richard Ciemiewicz, Technical Vice Chairman
BWRVIP Assessment Committee
Exelon Corp.
Peach Bottom Atomic Power Station
M/S SMB3-6
1848 Lay Road
Delta, PA 17314-9032

H. Lewis Sumner, Executive Chairman
BWRVIP Mitigation Committee
Vice President, Hatch Project
Southern Nuclear Operating Co.
M/S BIN B051, P.O. BOX 1295
40 Inverness Center Parkway
Birmingham, AL 35242-4809

Gary Park, Chairman
BWRVIP Inspection Focus Group
Nuclear Management Co.
Monticello Nuclear Plant
2807 W. Country Road 75
Monticello, MN 55362-9635

Robert Carter, EPRI BWRVIP
Assessment Manager
Greg Selby, EPRI BWRVIP
Inspection Manager
EPRI NDE Center
P.O. Box 217097
1300 W. T. Harris Blvd.
Charlotte, NC 28221

REQUEST FOR ADDITIONAL INFORMATION

OF THE BWRVIP VESSEL AND INTERNALS PROJECT REPORT BWRVIP-76

The staff has completed its initial review of the topical report BWRVIP-76, "Boiling Water Reactor Core Shroud Inspection & Flaw Evaluation Guidelines," dated November 1999. In order to complete the review, the staff needs additional information from the Boiling Water Reactor Vessels and Internals Program (BWRVIP). The staff's request for additional information (RAI) is provided below. The RAIs have been discussed with the BWRVIP during the meeting that was held on July 1, 2004, at NRC Headquarters in Rockville, Maryland.

BWRVIP-76-1

In paragraph 2.3.2 of the BWRVIP-76 report, surface examinations are identified in several places as including visual examinations. To be consistent with Section XI of the American Society of Mechanical Engineers (ASME) Code, surface examinations are identified as magnetic particle, liquid penetrant and eddy current examinations. Visual examinations (VT-1, VT-2, and VT-3) are identified in a separate category. Therefore, the staff requests that the BWRVIP revise the inspection categories, as identified above, in a future supplement to the BWRVIP-76 report.

BWRVIP-76-2

Section 2.3.1 of the BWRVIP-76 report states that end of intervals (EOIs) will be determined for any cracks found in vertical welds in the un-repaired Category C shrouds by using "an acceptable crack growth rate." The staff requests that the BWRVIP provide more detail regarding "an acceptable crack growth rate (i.e., is the crack growth rate going to be in accordance with a BWRVIP, Materials Reliability Program, Westinghouse Commercial Atomic Power topical report?).

BWRVIP-76-3

Section 3.2 of the BWRVIP-76 report states that inspections are not required for horizontal or vertical welds that are structurally replaced by a repair. The staff requests that the BWRVIP provide a definition of "structurally replaced." The staff also requests that the BWRVIP provide examples and sketches of how horizontal and vertical welds would be structurally replaced by a repair that would not require any future inspections. Please provide a list of BWR plants that have structurally replaced horizontal welds and structurally replaced vertical welds.

ENCLOSURE

M

NRC SUPPLEMENTAL REQUEST FOR ADDITIONAL INFORMATION

2004-557

UNITED STATES
NUCLEAR REGULATORY COMMISSION
WASHINGTON, D.C. 20555-0001

December 30, 2004

Bill Eaton, BWRVIP Chairman
Entergy Operations, Inc.
Echelon One
1340 Echelon Parkway
Jackson, MS 39213-8202

SUBJECT: SUPPLEMENTAL REQUEST FOR ADDITIONAL INFORMATION - REVIEW OF BWR VESSEL AND INTERNALS PROJECT REPORT, BWRVIP-76, "BWR CORE SHROUD INSPECTION AND FLAW EVALUATION GUIDELINES"

Dear Mr. Eaton:

By letter dated December 9,1999, you submitted for NRC staff review, Electric Power Research Institute (EPRI) proprietary report, BWRVIP-76, "BWR Vessel and Internals Project, BWR Core Shroud Inspection and Flaw Evaluation Guidelines." The purpose of this report is to define generic acceptance standards and inspection intervals for horizontal and vertical welds in repaired and un-repaired core shrouds, and procedures for determining plant-specific inspection intervals when the generic acceptance standards are not applicable. The report also includes generic inspection intervals and acceptance standards for radial ring welds, repair hardware and repair anchorages in repaired core shrouds.

In addition to the request for additional information (RAI) that the staff sent to you on July 9, 2004, the staff has determined that supplemental information is needed to complete the review. The supplemental RAIs regarding the BWRVIP-76 report is attached. If you have any questions, please contact Meena Khanna at (301) 415-2150.

Sincerely,

Stephanie Coffin, Chief
Vessels & Internals Integrity and Welding Section
Materials and Chemical Engineering Branch
Division of Engineering
Office of Nuclear Reactor Regulation

Project No. 704

Enclosure: As stated

cc:

Tom Mulford, EPRI BWRVIP
Integration Manager
Raj Pathania, EPRI BWRVIP
Mitigation Manager
Ken Wolfe, EPRI BWRVIP
Repair Manager
Larry Steinert, EPRI BWRVIP
Electric Power Research Institute
P.O. Box 10412
3412 Hillview Ave.
Palo Alto, CA 94303

George Inch, Technical Chairman
BWRVIP Assessment Committee
Constellation Nuclear
Nine Mile Point Nuclear Station (M/S ESB-1)
348 Lake Road
Lycoming, NY 13093

William C. Holston, Executive Chairman
BWRVIP Integration Committee
Constellation Generation Group
Nine Mile Point Nuclear Station
P. O. Box 63
Lycoming, NY 13093

Jim Meister, BWRVIP Vice-Chairman
Exelon Corp.
Cornerstone II at Cantera
4300 Winfield Rd.
Warrenville, IL 60555-4012

Al Wrape, Executive Chairman
BWRVIP Assessment Committee
PPL Susquehanna, LLC
2 N. 9th St.
Allentown, PA 18101-1139

H. Lewis Sumner, Executive Chairman
BWRVIP Mitigation Committee
Vice President, Hatch Project
Southern Nuclear Operating Co.
M/S BIN B051, P.O. BOX 1295
40 Inverness Center Parkway
Birmingham, AL 35242-4809

Robin Dyle, Technical Chairman
BWRVIP Integration Committee
Southern Nuclear Operating Co.
42 Inverness Center Parkway (M/S B234)
Birmingham, AL 35242-4809

Denver Atwood, Technical Chairman
BWRVIP Repair Focus Group
Southern Nuclear Operating Co.
Post Office Box 1295
40 Inverness Center Parkway (M/S B031)
Birmingham, AL 35242-4809

Jeff Goldstein, Technical Chairman
BWRVIP Mitigation Committee
Entergy Nuclear NE
440 Hamilton Ave. (M/S K-WPO-11c)
White Plains, NY 10601

Dale Atkinson, BWRVIP Liason to EPRI
Nuclear Power Council
Energy Northwest
Columbia Generating Station (M/S PEO8)
P. O. Box 968
Snake River Complex
North Power Plant Loop
Richland, WA 99352-0968

Richard Ciemiewicz, Technical Vice Chairman
BWRVIP Assessment Committee
Exelon Corp.
Peach Bottom Atomic Power Station
M/S SMB3-6
1848 Lay Road
Delta, PA 17314-9032

Gary Park, Chairman
BWRVIP Inspection Focus Group
Nuclear Management Co.
Monticello Nuclear Plant
2807 W. Country Road 75
Monticello, MN 55362-9635

Robert Carter, EPRI BWRVIP
Assessment Manager
Greg Selby, EPRI BWRVIP
Inspection Manager
EPRI NDE Center
P.O. Box 217097
1300 W. T. Harris Blvd.
Charlotte, NC 28221

SUPPLEMENTAL REQUEST FOR ADDITIONAL INFORMATION REGARDING
BWRVIP-76: "BWR CORE SHROUD INSPECTION AND FLAW EVALUATION GUIDELINES"

SUPPLEMENTAL RAI 76-1

In accordance with Section 3.5 of BWRVIP-76, a "detailed" inspection of repair assemblies shall include VT-3 of accessible locking devices, critical gap or contact areas, bolting, and the overall component. Since there are a limited number of repair hardware designs, identify the additional inspections required by the "detailed" inspections for the existing designs.

SUPPLEMENTAL RAI 76-2

Aging degradation of reactor vessel internals has been an ongoing problem in BWRs. Based on this statement, the staff requests the BWRVIP to discuss why the 10 year interval for performing inspections as identified in Section 3.5 of BWRVIP-76 is considered adequate. To demonstrate the adequacy of the 10 year inspection interval, the staff requests the BWRVIP to provide all data that demonstrates the impact of neutron fluence on the integrity of the repair assembly replacement material (i.e. 316L, XM-19, and Inconel X-750).

SUPPLEMENTAL RAI 76-3

The first paragraph of Section 3.5 of BWRVIP-76 states: "Bolt-tightness shall be verified in cases where it is critical in maintaining repair/replacement component operability. Further, a detailed inspection may include additional scope as specified by the designer."

The second paragraph of Section 3.5 of BWRVIP-76 states: "Bolt tightness may be verified by visually examining the repair assembly and verifying that threaded components are seated and there are no unintended gaps at tensioned member contact points. Alternately, other means of verification of bolt tightness may be specified where visual examination is not feasible or adequate. It is not necessary to confirm the amount of repair assembly preload during routine inspection of repair hardware."

The staff interprets the first paragraph to require bolt tightness for components where it is critical to maintain repair and replacement operability. Visual inspections are not considered adequate for verifying bolt tightness and would not be acceptable to the staff in cases where bolt tightness is critical to component operability.

The staff interprets the second paragraph to be the requirements that are followed for all other non-critical components.

The staff requests the BWRVIP to confirm if the staff's interpretation is correct and to clarify the first two paragraphs accordingly.

ENCLOSURE

N

BWRVIP RESPONSE TO NRC REQUEST FOR ADDITIONAL INFORMATION

ELECTRIFY THE WORLD

EPRI

BWRVIP BWR Vessel & Internals Project 2005-249

(via e-mail)

June 8, 2005

TO: All BWRVIP Committee Members

FROM: Robin Dyle/Tom Mulford Tom J. Mulford

SUBJECT: BWRVIP Response to NRC Requests for Additional Information on BWRVIP-76 – BWR Core Shroud Inspection and Flaw Evaluation Guidelines

Enclosed for your information is one copy of the BWRVIP response to the NRC Requests for Additional Information (RAIs) on the BWRVIP report entitled "BWR Vessel and Internals Project, BWR Core Shroud Inspection and Flaw Evaluation Guidelines (BWRVIP-76)." The letter transmitting this response to the NRC is also enclosed.

If you have any questions on this subject, please contact Bob Carter at EPRI by telephone at 704.547.6019 or by e-mail at bcarter@epri.com

CORPORATE HEADQUARTERS
3412 Hillview Avenue | Palo Alto CA 94304-1395 USA | 650.855.2000 | Customer Service 800.313.3774 | www.epri.com

ELECTRIFY THE WORLD

EPRI

BWRVIP BWR Vessel & Internals Project 2005-248

June 8, 2005

Document Control Desk
U. S. Nuclear Regulatory Commission
11555 Rockville Pike
Rockville, MD 20852

Attention: Meena Khanna

Subject: Project No. 704 – BWRVIP Response to NRC Requests for Additional Information on BWRVIP-76

References:
1. Letter from Matthew A. Mitchell (NRC) to Bill Eaton (BWRVIP Chairman), "Request for Additional Information – Review of the Boiling Water Reactor Vessel and Internals Project Report, BWRVIP-76, 'Boiling Water Reactor Core Shroud Inspection & Flaw Evaluation Guidelines,'" dated July 9, 2004.
2. Letter from Stephanie M. Coffin (NRC) to Bill Eaton (BWRVIP Chairman), "Supplemental Request for Additional Information – Review of BWR Vessel and Internals Project Report, BWRVIP-76, 'BWR Core Shroud Inspection and Flaw Evaluation Guidelines,'" dated December 30, 2004.
3. Letter from Carl Terry (BWRVIP Chairman) to Document Control Desk (NRC), "Project 704 – "BWR Vessel and Internals Project, BWR Core Shroud Inspection and Flaw Evaluation Guidelines (BWRVIP-76)," dated December 9, 1999.

Enclosed are five (5) copies of the BWRVIP response to the NRC Requests for Additional Information (RAIs) on the BWRVIP report entitled "BWR Vessel and Internals Project, BWR Core Shroud Inspection and Flaw Evaluation Guidelines (BWRVIP-76)" that were transmitted to the BWRVIP by the Reference 1 and 2 NRC letters identified above. The Response to the first NRC RAI (Reference 1) is provided as Attachment 1, and the Response to the Supplemental RAI (Reference 2) is provided as Attachment 2. The attachments repeat each of the requests for additional information from the NRC verbatim followed by the BWRVIP response to that request.

Please note that the enclosed attachments contain proprietary information. Therefore, the request to withhold the BWRVIP-76 report from public disclosure transmitted to the NRC by the Reference 3 letter identified above also applies to the enclosed attachments.

If you have any questions on this subject, please contact George Inch (Constellation Generation Group, BWRVIP Assessment Committee Chairman) by telephone at 315.349.2441.

Sincerely,

William A Eaton

William A. Eaton
Entergy Operations
Chairman, BWR Vessel and Internals Project

CORPORATE HEADQUARTERS
3412 Hillview Avenue | Palo Alto CA 94304-1395 USA | 650.855.2000 | Customer Service 800.313.3774 | www.epri.com

EPRI Proprietary Information

Attachment 1

BWRVIP Response to NRC Request for Additional Information on BWRVIP-76

Items from the NRC Request for Additional Information on BWRVIP-76 are repeated below verbatim followed by the BWRVIP response to that item.

NRC RAI 76-1

In paragraph 2.3.2 of the BWRVIP-76 report, surface examinations are identified in several places as including visual examinations. To be consistent with Section XI of the American Society of Mechanical Engineers (ASME) Code, surface examinations are identified as magnetic particle, liquid penetrant and eddy current examinations. Visual examinations (VT-1, VT-2, and VT-3) are identified in a separate category. Therefore, the staff requests that the BWRVIP revise the inspection categories, as identified above, in a future supplement to the BWRVIP-76 report.

BWRVIP Response to NRC RAI 76-1

The BWRVIP agrees with the comment and proposes to delete the word "surface" from the report where it used in this manner.

NRC RAI-76-2

Section 2.3.1 of the BWRVIP-76 report states that end of intervals (EOIs) will be determined for any cracks found in vertical welds in the un-repaired Category C shrouds by using "an acceptable crack growth rate." The staff requests that the BWRVIP provide more detail regarding "an acceptable crack growth rate (i.e., is the crack growth rate going to be in accordance with a BWRVIP, Materials Reliability Program, Westinghouse Commercial Atomic Power topical report?).

BWRVIP Response to NRC RAI 76-2

The crack growth rates used are those approved by the BWRVIP. The BWRVIP proposes to revise the text in Section 2.3.1 as follows:

> *"To determine the EOI, any cracks found in the weld will be grown using crack growth rates approved by the BWRVIP (e.g., in BWRVIP-14 or BWRVIP-99)."*

Note that the BWRVIP submits any guidance regarding approved crack growth rates to the NRC for review.

EPRI Proprietary Information

NRC RAI 76-3

Section 3.2 of the BWRVIP-76 report states that inspections are not required for horizontal or vertical welds that are structurally replaced by a repair. The staff requests that the BWRVIP provide a definition of "structurally replaced." The staff also requests that the BWRVIP provide examples and sketches of how horizontal and vertical welds would be structurally replaced by a repair that would not require any future inspections. Please provide a list of BWR plants that have structurally replaced horizontal welds and structurally replaced vertical welds.

BWRVIP Response to NRC RAI 76-3

"Structurally replaced" means that the installed repair hardware is adequate to maintain the function of the shroud even if the welds are completely failed (i.e., 100-percent throughwall cracked over the entire length of the welds). Requirements for a repair of this type are delineated in BWRVIP-02 (*"BWR Vessel and Internals Project, BWR Core Shroud Repair Design Criteria, Rev. 2 (BWRVIP-02)"*). An example of a repair that structurally replaces the circumferential welds is the tie-rod repair that a number of plants have installed. The tie rods (shown schematically in Figure 1) are designed to prevent vertical displacement of the shroud rings, even if the circumferential welds are completely failed. Wedges are installed to prevent lateral motion. Since the circumferential welds are no longer needed to maintain the functions of the shroud, inspection of the welds is not required. An example of a repair that structurally replaces a vertical weld is shown schematically in Figure 2.

[[

Content Deleted -
EPRI Proprietary Information

]] TS

[[

Content Deleted -
EPRI Proprietary Information

]] TS

Figure 1: Schematic of Core Shroud Horizontal Weld Repair (Tie-rod Repair)

[[

Content Deleted -
EPRI Proprietary Information

]] TS

Figure 2: Schematic of Core Shroud Vertical Weld Repair

EPRI Proprietary Information

Attachment 2

BWRVIP Response to NRC Supplemental Request for Additional Information on BWRVIP-76

Items from the NRC Supplemental Request for Additional Information on BWRVIP-76 are repeated below verbatim followed by the BWRVIP response to that item.

SUPPLEMENTAL NRC RAI 76-1

In accordance with Section 3.5 of BWRVIP-76, a "detailed" inspection of repair assemblies shall include VT-3 of accessible locking devices, critical gap or contact areas, bolting, and the overall component. Since there are a limited number of repair hardware designs, identify the additional inspections required by the "detailed" inspections for the existing designs.

BWRVIP Response to Supplemental NRC RAI 76-1

The staff is correct that only a limited number of general shroud repair designs have been installed in the BWR fleet. However, the details of those designs can vary significantly from plant to plant. For example, the design of a lower tie-rod attachment is different for a plant with a gusset-type shroud support plate than for a BWR/2 "conical" shroud support. Consequently, when details of the designs are considered, there are a large number of different configurations and the BWRVIP is not in a position to define specific inspections for each. In addition, future designs may include additional differences from those existing today. It is primarily for this reason that BWRVIP-76 does not provide design-specific inspection requirements and that it requires a utility to consider vendor recommendations (Section 3.1) in developing a plant-specific inspection plan.

SUPPLEMENTAL NRC RAI 76-2

Aging degradation of reactor vessel internals has been an ongoing problem in BWRs. Based on this statement, the staff requests the BWRVIP to discuss why the 10 year interval for performing inspections as identified in Section 3.5 of BWRVIP-76 is considered adequate. To demonstrate the adequacy of the 10 year inspection interval, the staff requests the BWRVIP to provide all data that demonstrates the impact of neutron fluence on the integrity of the repair assembly replacement material (i.e. 316L, XM-19, and Inconel X-750).

BWRVIP Response to Supplemental NRC RAI 76-2

The BWRVIP believes that a 10 year reinspection interval for shroud repair hardware is reasonable for a number of reasons. First, the repair design utilizes IGSCC-resistant materials as well as modern fabrication processes that preclude the occurrence of IGSCC in the repair hardware (sensitization is avoided, coldwork is prohibited, etc.). Section

EPRI Proprietary Information

5.10 of BWRVIP-02, Revision 2 provides the requirements for materials used in core shroud repair designs. This has been approved by the NRC (Reference 1).

Secondly, the highly stressed components of the repair hardware (e.g., tie-rods) are located in regions of relatively low fluence. The fluence at the radial location of the tie rod near the core mid-plane is typically estimated to be on the order of 10^{19} n/cm^2 after approximately 40 years of exposure. This is well below the fluence at which radiation is known to affect the structural properties of these materials.

Thirdly, the Shroud Repair Design Criteria (BWRVIP-02, Rev. 2, Section 5.1.12) requires that the repair be evaluated for effects of irradiation relaxation utilizing end-of-life fluences. Allowances for these effects are included in the design of the repair.

And finally, all thirteen U.S. plants with shroud repairs have performed one or more inspections of the repair hardware. While none of the reinspections were performed 10 years after the baseline (the first shroud repairs were installed in early 1995), some of the reinspections were performed as much as 8 or 9 years after the baseline. The only anomalies that have been observed were related to installation problems. These anomalies were corrected and subsequent inspections have shown that they have not reoccurred. No material degradation has been reported.

Extensive laboratory testing indicates that new alloy X-750 parts will perform satisfactorily if they meet current specification requirements with regard to heat treatment, fabrication sequence, and stress and strain limits (Reference. 2).

Since IGSCC is not expected and radiation effects are not significant, and since inspections to date have revealed no material degradation, 10 years is considered to be a reasonable reinspection interval. As with all inspection intervals recommended by the BWRVIP, this period would be adjusted if degradation is observed or if new information indicates that 10 years is not an appropriate interval.

SUPPLEMENTAL NRC RAI 76-3

The first paragraph of Section 3.5 of BWRVIP-76 states: "Bolt-tightness shall be verified in cases where it is critical in maintaining repair/replacement component operability. Further, a detailed inspection may include additional scope as specified by the designer."

The second paragraph of Section 3.5 of BWRVIP-76 states: "Bolt tightness may be verified by visually examining the repair assembly and verifying that threaded components are seated and there are no unintended gaps at tensioned member contact points. Alternately, other means of verification of bolt tightness may be specified where visual examination is not feasible or adequate. It is not necessary to confirm the amount of repair assembly preload during routine inspection of repair hardware."

EPRI Proprietary Information

The staff interprets the first paragraph to require bolt tightness for components where it is critical to maintain repair and replacement operability. Visual inspections are not considered adequate for verifying bolt tightness and would not be acceptable to the staff in cases where bolt tightness is critical to component operability.

The staff interprets the second paragraph to be the requirements that are followed for all other non-critical components.

The staff requests the BWRVIP to confirm if the staff's interpretation is correct and to clarify the first two paragraphs accordingly.

BWRVIP Response to Supplemental NRC RAI 76-3

All tie-rod shroud repairs require that a certain amount of tension (or preload) be maintained in the tie-rods during operating conditions in order to ensure the shroud segments do not separate during normal or off-normal operation. This required preload is established in two different ways. In the repair designs used in most BWRs, the preload is developed due to differential thermal expansion between the tie-rods and the core shroud. The tie-rods are installed with essentially no preload; the initial preload on the rods is just sufficient to ensure that the tie-rod assemblies remain properly positioned. As the reactor heats up, the core shroud expands more than the tie-rods and thus develops the required preload in the tie-rods.

For these designs, an inspection that ensures that no unintended gaps exist is adequate to ensure that the design preload will be obtained during heat-up and operation.

One U.S. BWR incorporates a shroud repair design that does not utilize differential expansion to develop the required preload. In this BWR, a specified preload must be applied to the tie-rods in the cold condition. This plant performs periodic inspections to verify that the required preload is present.

The BWRVIP proposes to clarify the inspection requirements by revising the second paragraph in Section 3.5 as follows:

Bolt tightness must be verified using an appropriate inspection technique. For some designs, it may be adequate to perform a visual inspection to verify that threaded components are seated and that there are no unintended gaps at tensioned member contact points. For other designs, it may be necessary to verify the tension in the tierods. Selection of the appropriate inspection technique depends on the details of the repair design. Vendor guidance shall be obtained in order to determine the appropriate inspection technique.

EPRI Proprietary Information

REFERENCES

1. Letter from William H. Bateman (NRC) to Bill Eaton (BWRVIP Chairman, "Safety Evaluation of Proprietary EPRI Report, BWR Vessel and Internals Project, BWR Core Shroud Repair Design Criteria, Revision 2 (BWRVIP-02) (TAC NO. MB8969)," dated February 28, 2005.

2. "Materials Handbook for Nuclear Plant Pressure Boundary Applications," EPRI Technical Report TR-109668-S1-R1, December 1999.

O

NRC SECOND SUPPLEMENTAL REQUEST FOR ADDITIONAL INFORMATION

UNITED STATES
NUCLEAR REGULATORY COMMISSION
WASHINGTON, D.C. 20555-0001

July 2, 2007

Rick Libra, BWRVIP Chairman
DTE Energy
Fermi Nuclear Plant (M/S 280 OBA)
6400 N. Dixie Highway
Newport, MI 48166-9726

SUBJECT: REQUEST FOR ADDITIONAL INFORMATION - BWRVIP-76: BOILING WATER REACTOR (BWR) VESSEL AND INTERNALS PROJECT, BWR CORE SHROUD INSPECTION AND FLAW EVALUATION GUIDELINES

Dear Mr. Libra:

The Nuclear Regulatory Commission staff is reviewing Electric Power Research Institute Technical Report 114232, "BWR Core Shroud Inspection and Flaw Evaluation Guidelines (BWRVIP-76)" submitted by the Boiling Water Reactor Vessel and Internals Project (BWRVIP) for compliance with the license renewal rule Title 10 of the *Code of Federal Regulations* Part 54. The BWRVIP-76 report defines generic acceptance standards and inspection intervals for horizontal and vertical welds in repaired and unrepaired core shrouds, and procedures for determining plant-specific inspection intervals when the generic acceptance standards are not applicable. The report also includes generic inspection intervals and acceptance standards for radial ring welds, repair hardware and repair anchorages in repaired core shrouds.

The staff has determined that additional information is needed to complete the review. The staff's request for additional information (RAI) regarding the BWRVIP-76 report is enclosed. In order to complete the staff's review of the report in an efficient and effective manner, your complete response to the attached RAI is required no later than October 30, 2007. If you cannot provide a complete response by this date, please contact John Honcharik at (301) 415-1157 to discuss the withdrawal of the BWRVIP-76 report for compliance with the license renewal rule and its future resubmittal when you are prepared to respond to the RAI. In addition, if you have any other questions regarding the enclosed RAI, please contact Mr. Honcharik.

Sincerely,

Matthew A. Mitchell, Chief
Vessels & Internals Integrity Branch
Division of Component Integrity
Office of Nuclear Reactor Regulation

Project No. 704

Enclosure:
Request for Additional Information

cc: BWRVIP Service List

REQUEST FOR ADDITIONAL INFORMATION
BWRVIP-76 REPORT
BOILING WATER REACTOR (BWR) VESSEL AND INTERNALS PROJECT
BWR CORE SHROUD INSPECTION AND FLAW EVALUATION GUIDELINES
COMPLIANCE WITH THE LICENSE RENEWAL RULE

RAI 76(LR)-1

Discovery of intergranular stress corrosion cracking (IGSCC) on the upper support location of the tie rod repair at Hatch, Unit 1 during the unit's spring 2006 refueling outage suggests that the inspection criteria for the tie rod repair hardware for the extended period of operation should be reevaluated. The BWRVIP re-evaluation should take into consideration the presence of any high stress region that exceeds the threshold limits for IGSCC in the tie rod repair hardware.

RAI 76(LR)-2

Section 4.1, item 5 of the BWRVIP-100-A report, "Updated Assessment of the Fracture Toughness of Irradiated Stainless Steel for BWR Core Shrouds," states that fracture toughness values of stainless steel materials that are exposed to neutron fluence values greater than 1×10^{21} n/cm^2 (E > 1 MeV) are lower than those used in Appendix C of the BWRVIP-76 report. During a license renewal period, core shroud welds and base materials may be exposed to neutron fluence values 1×10^{21} n/cm^2 (E > 1 MeV) or greater. Since the inspection frequency in the BWRVIP-76 report is based on fracture toughness values which are not consistent with the BWRVIP-100-A report, the staff requests that the BWRVIP reevaluate the inspection frequency and strategy that are specified in Section 3 of Appendix K to the BWRVIP-76 report.

cc:

Randy Stark, EPRI BWRVIP
Integration Manager
Raj Pathania, EPRI BWRVIP
Mitigation Manager
Ken Wolfe, EPRI BWRVIP
Repair Manager
Larry Steinert, EPRI BWRVIP
Electric Power Research Institute
P.O. Box 10412
3420 Hillview Ave.
Palo Alto, CA 94303

Bob Geier, Technical Chairman
BWRVIP Assessment Committee
Exelon Corporation
Cornerstone II at Cantera
4300 Winfield Rd.
Warrenville, IL 60555

Jeff Goldstein, Technical Chairman
BWRVIP Mitigation Committee
Entergy Nuclear NE
440 Hamilton Ave. (M/S K-WPO-11c)
White Plains, NY 10601

Amir Shahkarami, Executive Chairman
BWRVIP Integration Committee
Exelon Corporation
Cornerstone II at Cantera
4300 Winfield Rd.
Warrenville, IL 60555-4012

Richard Anderson, Executive Chairman
BWRVIP Assessment Committee
Vice President, Nuclear
FirstEnergy Service Co.
Perry Nuclear Power Plant (M/S A-PY-290)
10 Center Road
Perry, OH 44081

Dennis Madison
BWRVIP Executive Oversight Committee
Site Vice President
Southern Nuclear Operating Co.
Edwin I. Hatch Nuclear Plant
US Hwy 1 N
Baxley, GA 31515-2010

Paul J. Davison
BWRVIP Executive Oversight Committee
PSEG Nuclear, LLC
Salem/Hope Creek Nuclear Station
11 Yubas Ave.
Burlington, NJ 08016

Denver Atwood, Technical Chairman
BWRVIP Repair Focus Group
Southern Nuclear Operating Co.
Post Office Box 1295
40 Inverness Center Parkway
(M/S B031)
Birmingham, AL 35242-4809

Charles J. Wirtz, Chairman
Technical Chairman BWRVIP Integration Committee
FirstEnergy Corp.
Perry Nuclear Power Plant
(M/S A250)
10 Center Road
Perry, OH 44081

Robert Carter, EPRI BWRVIP
Assessment Manager
Jeff Landrum, EPRI BWRVIP
Inspection Manager
EPRI NDE Center
P.O. Box 217097
1300 W. T. Harris Blvd.
Charlotte, NC 28221

Joe Donahue
BWRVIP Executive Oversight Committee
V. P., Nuclear Engineering & Services
Progress Energy, Inc.
410 S. Wilmington St. (M/S PEB6)
Raleigh, NC 27601-1849

P

BWRVIP RESPONSE TO SECOND SUPPLEMENTAL RAI

EPRI | ELECTRIC POWER RESEARCH INSTITUTE

2008-123 BWR Vessel & Internals Project (BWRVIP)

April 21, 2008

Document Control Desk
U. S. Nuclear Regulatory Commission
11555 Rockville Pike
Rockville, MD 20852

Attention: Jon Thompson

Subject: Project No. 704 – BWRVIP Response to NRC Request for Additional Information on BWRVIP-76

References:
1. Letter from Matthew A. Mitchell (NRC) to Rick Libra (BWRVIP Chairman), Request For Additional Information – BWRVIP-76: Boiling Water Reactor (BWR) Vessel and Internals Project, "BWR Core Shroud Inspection and Flaw Evaluation Guidelines," dated July 2, 2007.
2. Letter from Carl Terry (BWRVIP Chairman) to Document Control Desk (NRC) "Project 704 – BWRVIP-76: BWR Vessel and Internals Project, BWR Core Shroud Inspection and Flaw Evaluation Guidelines," dated December 9, 1999.

Enclosed are five (5) copies of the BWRVIP response to the NRC Request for Additional Information (RAI) on the BWRVIP report entitled "BWRVIP-76: BWR Vessel and Internals Project, BWR Core Shroud Inspection and Flaw Evaluation Guidelines," that was transmitted to the BWRVIP by the Reference 1 letter identified above.

Please note that the enclosed document contains proprietary information. Therefore, the request to withhold the BWRVIP-76 report from public disclosure which was transmitted to the NRC by the Reference 2 letter identified above also applies to the enclosed document.

If you have any questions on this subject, please contact Bob Geier (Exelon, BWRVIP Assessment Committee Technical Chairman) by telephone at 630.657.3830.

Sincerely,

Rick Libra

Rick Libra
Exelon Corporation
Chairman, BWR Vessel and Internals Project

Together . . . Shaping the Future of Electricity

PALO ALTO OFFICE
3420 Hillview Avenue, Palo Alto, CA 94304-1395 USA • 650.855.2000 • Customer Service 800.313.3774 • www.epri.com

EPRI Proprietary Information

BWRVIP Response to Request for Additional Information
BWRVIP-76 Report Boiling Water Reactor (BWR) Vessel and Internals Project
BWR Core Shroud Inspection and Flaw Evaluation Guidelines
Compliance with the License Renewal Rule

Each item from the NRC Request for Additional Information (RAI) is repeated below verbatim followed by the BWRVIP response to that item.

RAI 76(LR)-1

Discovery of intergranular stress corrosion cracking (IGSCC) on the upper support location of the tie rod repair at Hatch, Unit 1 during the unit's spring 2006 refueling outage suggests that the inspection criteria for the tie rod repair hardware for the extended period of operation should be reevaluated. The BWRVIP re-evaluation should take into consideration the presence of any high stress region that exceeds the threshold limits for IGSCC in the tie rod repair hardware.

BWRVIP Response to RAI 76(LR)-1:

[[

Content Deleted -
EPRI Proprietary Information

]] TS

RAI 76(LR)-2

Section 4.1, item 5 of the BWRVIP-100-A report, "Updated Assessment of the Fracture Toughness of Irradiated Stainless Steel for BWR Core Shrouds," states that fracture toughness values of stainless steel materials that are exposed to neutron fluence values greater than $1x10^{21}$ n/cm^2 (E > 1 MeV) are lower than those used in Appendix C of the BWRVIP-76 report. During a license renewal period, core shroud welds and base materials may be exposed to neutron fluence values $1x10^{21}$ n/cm^2 (E > 1 MeV) or greater. Since the inspection frequency in the BWRVIP-76 report is based on fracture toughness values which are not consistent with the BWRVIP-100-A report, the staff requests that the BWRVIP reevaluate the inspection frequency and strategy that are specified in Section 3 of Appendix K to the BWRVIP-76 report.

EPRI Proprietary Information

BWRVIP Response to RAI 76(LR)-2:

BWRVIP has developed methodologies for evaluating flaws in core shroud welds. These methodologies are documented in the following reports which have been approved by NRC via safety evaluations.

1. "BWR Vessel and Internals Project, BWR Core Shroud Inspection and Flaw Evaluation Guidelines (BWRVIP-76)," EPRI Report TR-114232, November 1999.

2. "BWRVIP-99: BWR Vessel and Internals Project, Crack Growth Rates in Irradiated Stainless Steels in BWR Internal Components," EPRI Technical Report 1003018, December 2001.

3. "BWRVIP-100-A: BWR Vessel and Internals Project, Updated Assessment of the Fracture Toughness of Irradiated Stainless Steel for BWR Core Shrouds," EPRI Technical Report 1013396, August 2006.

At the time BWRVIP-76 was issued, it was recognized that methodologies to determine crack growth rates and fracture toughness did not exist to address high fluence conditions. Thus, the guidance in BWRVIP-76 directed utilities to submit flaw evaluations to the NRC staff for approval when cracking was greater than 10% of the inspected length and the fluence exceeded $5x10^{20}$ n/cm^2. However, since that time BWRVIP-99 and BWRVIP-100-A have been issued and approved by NRC. Consequently, criteria have been established to address the effects of fluence on crack growth and fracture toughness that exceed the limits specified in BWRVIP-76. An analysis performed to these criteria will, on a plant specific basis, establish an inspection frequency. BWR utilities are required to follow this guidance when performing flaw evaluation.

The BWRVIP intends to investigate development of generic inspection intervals for high fluence conditions. Regardless, the BWRVIP has in place a set of NRC approved methodologies to address the evaluation of flaws in high fluence core shroud welds. The BWRVIP intends to incorporate these methodologies in a revision to BWRVIP-76.

Q
RECORD OF REVISONS

BWRVIP-76-A	Information from the following documents was used in preparing the changes included in this revision of the report: 1. "BWR Vessel and Internals Project, BWR Core Shroud Inspection and Flaw Evaluation Guidelines (BWRVIP-76)," EPRI Report TR-114232, November 1999. 2. Letter from William Bateman (NRC) to Carl Terry (BWRVIP Chairman), "revision to BWRVIP-07 Table 1", February 13, 2002. (BWRVIP Correspondence File Number 2002-055). 3. Memo from Vaughn Wagoner (BWRVIP) to BWRVIP Membership, "Modification to Core Shroud I&E Guidelines (BWRVIP-63 and BWRVIP-76)," October 23, 2000 (BWRVIP Correspondence File Number 2000-271). 4. Letter from William Eaton (BWRVIP Chairman) to Meena Khanna (NRC), "Project No. 704 – BWRVIP Response to NRC Requests for Additional Information on BWRVIP-76," June 8, 2005 (BWRVIP Correspondence File Number 2005-249). 5. Letter from Matthew Mitchell (NRC) to William Eaton (BWRVIP Chairman), "Safety Evaluation of Proprietary EPRI Report, "BWR Vessel and Internals Project, BWR Core Shroud Inspection and Flaw Evaluation Guidelines (BWRVIP-76)"," July 27, 2006 (BWRVIP Correspondence File Number 2006-387). 6. Letter from Jack Strosnider (NRC) to Carl Terry (BWRVIP Chairman), "Final Safety Evaluation of the "BWR Vessel and Internals Project, BWR Shroud Support Inspection and Flaw Evaluation Guidelines (BWRVIP-38)," EPRI Report TR-108823 (TAC NO. M99638)", July 24, 2000 (BWRVIP Correspondence File Number 2000-224). 7. Letter from Jack Strosnider (NRC) to Carl Terry (BWRVIP Chairman), "Final Safety Evaluation of the "BWRVIP Vessel and Internals Project, "BWR Vessel and Internals Project, LPCI Coupling Inspection and Flaw Evaluation Guidelines (BWRVIP-42)," (TAC NO. MA1 1 02)," May 26, 2000 (BWRVIP Correspondence File Number 2000-156). 8. Letter from Carl Terry (BWRVIP Chairman) to C.E. Carpenter (NRC), "PROJECT NO. 704 -- BWRVIP Response to NRC Safety Evaluation of BWRVIP-63," May 30, 2001 (BWRVIP Correspondence File Number 2001-189). 9. Letter from Carl Terry (BWRVIP Chairman) to Meena Khanna (NRC), "PROJECT NO. 704 -- BWRVIP Response to the NRC Final Safety Evaluation of BWRVIP-63," April 28, 2003. (BWRVIP Correspondence File Number 2003-138). 10. Letter from Matthew Mitchell (NRC) to Rick Libra (BWRVIP Chairman), "Request for Additional information – BWRVIP-76: Boiling Water Reactor (BWR) Vessel and Internals Project, BWR Core Shroud Inspection and Flaw Evaluation Guidelines," July 2, 2007 (BWRVIP Correspondence File Number 2007-208). 11. Letter from Rick Libra (BWRVIP Chairman) to Jon Thompson (NRC), "PROJECT NO. 704 -- BWRVIP Response to NRC Request for Additional Information on BWRVIP-76," April 21, 2008 (BWRVIP Correspondence File Number 2008-123). 12. BWRVIP Inquiry 2005-010, "Shroud Single-Sided Vertical Weld Examination Requirements" (BWRVIP Correspondence File Number 2005-465).

	13. BWRVIP Inquiry 2007-001, "BWRVIP-76 Interpretation of Plant Specific Evaluations versus Table 2-1" (BWRVIP Correspondence File Number 2007-010). 14. BWRVIP Inquiry 2008-006, "Unrepaired Shroud Vertical Weld End of Interval" (BWRVIP Correspondence File Number 2008-336). 15. "BWRVIP-94, Revision 1: BWR Vessel and Internals Project, Program Implementation Guide," EPRI, Palo Alto: 2005. 1011702. 16. Letter from Thomas Blount (NRC) to Rick Libra (BWRVIP Chairman), "Acknowledgement of Boiling Water Reactor Vessel and Internals Project Letter Concerning Corrections to Final Safety Evaluation of Topical Report "BWR Core Shroud Inspection and Flaw Evaluation Guidelines (BWRVIP-76)" for License Renewal, Appendix K and Issuance of Final Safety Evaluation Revision (TAC NO. ME2355)" October 26, 2009 (BWRVIP Correspondence File Number 2009-308). Details of the revisions can be found in Table Q-1.
END	

Table Q-1
Revision Details

Required Revision	Source of Requirement for Revision	Description of Revision Implementation
	Editorial	NRC Safety Evaluations inserted after Title Page.
	Editorial	Non-essential front-matter revised to comply with current EPRI publication guidelines.
	Editorial	Front-matter: Record of revisions added.
	Editorial	Executive Summary updated.
	Editorial	Historical background in Section 1 updated.
Sect. 3.2.3: The staff requests that the BWRVIP include a discussion of this recent plant operating experience (shroud stabilizer X-750 cracking at Hatch) and include any lessons learned or additional guidelines in the -A version of the BWRVIP-76 report, as needed.	NRC Final SE on BWRVIP-76, Section 3.2.3 (2006-387)	Brief discussion of Hatch tie-rod upper support bracket cracking added to Section 1.1.
Clarify that BWRVIP and NRC have agreed that inspection of a minimum length of weld to ensure structural integrity is not acceptable. Inspections should interrogate all accessible regions of the weld.	INPO	Added discussion that "good ligament" approach is not acceptable. Inspection must include all accessible areas as practical. Discussion added to Section 1.1 (Background) and 1.3 (Definitions).
	Editorial	Section 1.3 added: "Definitions".
Clarify "surface" exams for consistency with Section XI (i.e., PT, ET are surface exams; visuals are not)	BWRVIP response to RAI on BWRVIP-76, RAI 76-1 (2005-249)	Definition of surface exam added to Section 1.3.
	BWRVIP comment	Definition of EOI added to Section 1.3. EOI may be extended by a maximum of 3 months in order to accommodate unanticipated changes in outage schedules.
	Editorial	Definition of "average crack depth" clarified. Appendices D and F revised using words from memo 2000-271 to clarify original intent of report. Additional note added to section 1.3 (Definitions) and 2.3.3.
	Editorial	Discussion added to Section 1.3 ("Definitions") to clarify meaning of "2-sided" with respect to visual and UT exams.

Table Q-1
Revision Details (Continued)

Required Revision	Source of Requirement for Revision	Description of Revision Implementation
Add NEI 03-08 Implementation Requirements	BWRVIP-94, Revision 1	Section 1.4 added: "NEI 03-08 Implementation Requirements."
	Editorial	Note regarding applicability of ASME inspections added to Section 2.1.
Consider allowing a plant specific evaluation in lieu of Table 2-1 and Consider revising report to not require submittal of flaw evaluations to NRC if they comply with -76 procedures	Inquiry 2007-001	Sect 2.2 revised to allow Plant Specific evaluation in lieu of Table 2-1. Text also revised to allow use of plant specific evaluation of vertical welds in lieu of using generic acceptance criteria. Section 4 revised to reference BWRVIP-94 (which requires reporting when flaw evaluation is not IAW BWRVIP guidance).
For plants with two H4-type welds, clarify whether the one with highest fluence should be inspected preferentially.	INPO	Section 2.2.1 revised to recommend inspection of the highest fluence weld followed by inspection of the other weld at the next inspection. If one weld is found to be cracked, it shall be inspected IAW inspection results. Other weld shall be inspected during every other inspection.
	Editorial	Text in Section 2.2.1 revised to note that a leakage evaluation is required if through-wall cracking is observed.
	Editorial	Section 2.2.2 revised to clarify that only UT or 2-sided visual or surface inspection results should be used in evaluation of horizontal welds.
	BWRVIP comment	Section 2.2.2 (and multiple other locations) revised to clarify when fuel should be moved to allow visual inspection of shroud ID welds.
	Inquiry 2008-006	Section 2.3.1 revised to clarify that EOI for a vertical weld can be based on either inspection of the weld or evaluation of horizontal welds.

Table Q-1
Revision Details (Continued)

Required Revision	Source of Requirement for Revision	Description of Revision Implementation
Clarify when 1-sided exams can be used	Inquiry 2005-010	Intent of inquiry response incorporated into Sections 2.3.2 and 3.3. Also added to Section 1.3 (Definitions).
The staff recommends that the BWRVIP revise the BWRVIP-76 report to indicate that all inspections shall be performed in accordance with the most recent version of BWRVIP-03 (multiple places)	NRC Final SE on BWRVIP-76, Section 3.1.1 (2006-387)	Text revised (multiple locations).
Clarify that welds below H7 do not require inspection in unrepaired shrouds.	NRC Final Safety Evaluation on BWRVIP-38, Issue 3.1.4 (2000-224)	Section 2.3.3 revised to clarify that short vertical welds below H7 do not need to be inspected in unrepaired shrouds.
Clarify appropriate crack growth rates for use in flaw evaluations	BWRVIP response to RAI 76-2 on BWRVIP-76 (2005-249)	Text in Section 2 and App. D and F revised to require use of NRC-approved crack growth rate and fracture toughness.
Sect. 3.1.2.2: the staff recommends that the BWRVIP revise the BWRVIP-76 report to indicate that credit may be taken for previous inspections of horizontal or vertical welds provided those inspections satisfied the requirements of the most recent version of the BWRVIP-03 report.	NRC Final SE on BWRVIP-76, Section 3.1.2.2 (2006-387)	Section 2.3.3 revised to state that credit can be taken for previous inspections provided they met the requirements of the version of BWRVIP-03 in effect at the time the inspections were performed.
	Editorial	Section 2.3.3.1 and elsewhere: Use of general acceptance criteria and Table 2-1 limited to fluences less than 1E21 because technical basis (App. C and E) utilized K-150. BWRVIP-100 limits use of K-150 to fluences less than 1E21.
	Editorial	Flowcharts in Figures 2-1 to 2-5 and 3-1 to 3-3 revised for consistency with report revisions.
The reinspection interval based on a plant specific evaluation for Category B plants that have inspected less than 50% (ref. Figure 2-2) is limited to 6 years. The interval for Cat C plants (Figure 2-3) is capped by Table 2-1. Revise for consistency.	EPRI	Flowcharts revised to set max EOI for both Category B and C shrouds equal to 10 years.
	Editorial	Table 2-1 revised.

Table Q-1
Revision Details (Continued)

Required Revision	Source of Requirement for Revision	Description of Revision Implementation
Clarify that Table 2-1 is applicable to both Category B and C shrouds.	NRC Memo (2002-055)	Table title revised accordingly.
Clarify in Table 2-1 that fluences are at EOI.	Editorial	Note added to Table 2-1 that fluences are at EOI and fluence-related criteria are applicable if fluence at ANY part of the weld exceeds stated criteria.
	BWRVIP comment	Reinspection intervals in Table 2-1 for cracking less than 10-percent revised to require plant specific analysis if fluence exceeds 1E21.
	BWRVIP comment	Table 2-1 and Section 4 revised to require submittal only when fluence exceeds 3E21 (BWRVIP-99 and -100 now define crack growth rates and fracture toughness for high fluence.)
	Editorial	Table 2-1 clarified to indicate that NDE uncertainty is not added to measurements in order to use Table 2-1. This is consistent with the technical basis in App. C)
In response to the staff's RAI question 76-3, the BWRVIP indicated that it would include the following definition in Section 3.2 of the -A version of the BWRVIP-76 report: "Structurally replaced means that the installed repair hardware is adequate to maintain the function of the shroud even if the replaced welds are completely failed (i.e., 100 percent through-wall cracked over the entire length of the welds)."	NRC Final SE on BWRVIP-76, Section 3.2 (2006-387)	Text added as requested.
	BWRVIP comment	Section 3.3 revised to clarify that inspection of short vertical welds below H7 is required in repaired shrouds unless repair designer has justified otherwise.
	BWRVIP comment	Section 3.3 revised to require shroud vertical weld inspection *before* installation of shroud repair for the welds needed to support the repair.

Table Q-1
Revision Details (Continued)

Required Revision	Source of Requirement for Revision	Description of Revision Implementation
	BWRVIP comment	Reinspection interval for uncracked ring segment welds set at 10 years.
	BWRVIP comment	Section 3.5 revised to recommend vendor specification of repair hardware inspections consistent with BWRVIP Repair Design Criteria.
Clarify requirement for inspection of repair hardware for bolt-tightness	BWRVIP response to Supplemental RAI 76-3 on BWRVIP-76 (2005-249)	Second paragraph of Section 3.5 revised as follows: *Bolt tightness must be verified using an appropriate inspection technique. For some designs, it may be adequate to perform a visual inspection to verify that threaded components are seated and that there are no unintended gaps at tensioned member contact points. For other designs, it may be necessary to verify the tension in the tierods. Selection of the appropriate inspection technique depends on the details of the repair design. Vendor guidance shall be obtained in order to determine the appropriate inspection technique.*
Sect. 3.3.2: The staff finds the BWRVIP's proposal with respect to the reporting requirements to be adequate because the results will be provided to the staff via the BWRVIP inspection summary report. It should be noted, however, that this provision for having the BW RVIP report licensee inspection results does not replace the requirements placed on each licensee by 10 CFR 50.72 and 10 CFR 50.73, should the licensee's inspection results meet these reporting thresholds.	NRC Final SE on BWRVIP-76, Section 3.3.2 (2006-387)	Specific requirements for reporting inspection results deleted from BWRVIP-76. Reporting requirements are in BWRVIP-94. Section 4 revised to add reference to BWRVIP-94.

Table Q-1
Revision Details (Continued)

Required Revision	Source of Requirement for Revision	Description of Revision Implementation
Sect 3.3.3: Because the implementation guidelines and reporting requirements are included in the BWRVIP-94 report, "Program Implementation," the staff recommends that the BWRVIP include a reference to the most recent version of this report in Section 4.0 of the BWRVIP-76 report.	NRC Final SE on BWRVIP-76, Section 3.3.3 (2006-387)	Reference to BWRVIP-94 added to Section 4.
The following paragraph will be included in all revised I&E Guidelines: *"If, during the course of implementing these recommendations, it is determined that implementation cannot be achieved as described in the I&E guideline, or that meaningful results are not obtained, the user shall notify the BWRVIP with sufficient details to support development of alternative actions. These notifications, as well as planned actions by the BWRVIP, will be summarized and reported to the NRC."*	Final SE on BWRVIP-42, Issue 2.2 (2000-156)	The referenced paragraph was added to BWRVIP Program Implementation Guide (BWRVIP-94). Specific reporting requirements deleted from Section 4.0 of BWRVIP-76. Section 4 revised to reference BWVIP-94.
	Editorial	Clarification added as Note 7 to Table C-9.
	Editorial	App. D revised to require use of NRC-approved crack growth rates and fracture toughness.
BWRVIP will propose response to "Use of NDE Uncertainty" at a later date.	Response to SE on BWRVIP-63, Item 7 (2001-189)	Paragraph added to App. D and F: "In performing some flaw evaluations, the measured length and depth of observed flaws may need to be adjusted to account for NDE uncertainty. These adjustments shall be made in accordance with current BWRVIP recommendations." Reference to 2004-191 added.

Table Q-1
Revision Details (Continued)

Required Revision	Source of Requirement for Revision	Description of Revision Implementation
Revise use of 150 ksi root inch in performing flaw evaluations.	Response to Final SE on BWRVIP-63, Item 3 (2003-138)	App D and F revised to delete specific reference to 150 ksi-root-inch. Statement added that NRC- approved BWRVIP fracture toughness should be used. BWRVIP-100-A referenced. Fluence limits from BWRVIP-100 for use of Limit Load, LEFM and EPFM added to App. D. Table 2-1 and general acceptance criteria for horizontal and vertical welds limited to fluences less than 1E21 n/cm^2.
	BWRVIP Comment	Appendix I revised to use 8760 hours/year (vs 8000).
	NRC Request	Appendix L, M, N, O and P added: NRC/BWRVIP correspondence.
The staff recommends that the BWRVIP include a statement in its "Record of Revisions" table, of the -A version of the BWRVIP-76 report, that licensees shall implement the reporting requirements in accordance with the most recent version of the BWRVIP-94 report since the most updated implementation guidelines and reporting requirements are included in that report.	NRC Final SE on BWRVIP-76, Section 3.3.3 (2006-387)	Reference to BWRVIP-94 added to Section 4.
END		

The Electric Power Research Institute, Inc. (EPRI, www.epri.com) conducts research and development relating to the generation, delivery and use of electricity for the benefit of the public. An independent, nonprofit organization, EPRI brings together its scientists and engineers as well as experts from academia and industry to help address challenges in electricity, including reliability, efficiency, health, safety and the environment. EPRI also provides technology, policy and economic analyses to drive long-range research and development planning, and supports research in emerging technologies. EPRI's members represent more than 90 percent of the electricity generated and delivered in the United States, and international participation extends to 40 countries. EPRI's principal offices and laboratories are located in Palo Alto, Calif.; Charlotte, N.C.; Knoxville, Tenn.; and Lenox, Mass.

Together...Shaping the Future of Electricity

Programs:

Nuclear Power

BWR Vessel and Internals Project

© 2009 Electric Power Research Institute (EPRI), Inc. All rights reserved. Electric Power Research Institute, EPRI, and TOGETHER...SHAPING THE FUTURE OF ELECTRICITY are registered service marks of the Electric Power Research Institute, Inc.

1019057NP

Electric Power Research Institute
3420 Hillview Avenue, Palo Alto, California 94304-1338 • PO Box 10412, Palo Alto, California 94303-0813 USA
800.313.3774 • 650.855.2121 • askepri@epri.com • www.epri.com