Simulator Development

Ken Harris, I&C Supervisor

June 2, 2010

U.S. Nuclear Regulatory Commission
Pre-Application Meeting
Rockville, MD

NuScale Power

Outline

- Simulator development
- Simulator software tools
- Simulator process model
- Simulator logic and control
- Control room layout

Simulator Development

- Goal of simulator testing for HFE—demonstrate and validate adequacy of NuScale plant staffing concept of operation
  - Phase 1: Engineering simulator, including NSSS and Balance of Plant systems; target completion date is June 2009
  - Phase 2: Engineering simulator with S3R core simulation for a single module (basis for HSI and system controls development); target completion date is August 2010
  - Phase 3: Simulator representing cluster of four modules; target completion date is January 2011
  - Phase 4: Simulator capable of testing important design considerations for MCR (full scope); target completion date is June 2011

Simulator Development

- Simulator will be used as a simulation-assisted engineering tool (e.g., the Stable Start-up System)
- Simulator will be used to develop control logic for plant systems
- Examples of process and logic will be shown later in this presentation

Simulator Software Tool Set

- Idaho National Lab RELAP5_3D
- Studsvik S3R Neutronics Model
- JADE Modeling Tool Set
  - **JTopmeret**: Two Phase Flow Network Modeling
  - **JControl**: Functional Block Control Modeling
  - **JLogic**: Schematic Logic Modeling
  - **JElectric**: Electrical Network Modeling
- JADE Operator Control Station
- JADE Graphic User Interface (GUI)
  - **JDesigner**: Simulation Drawing Editor
- SimExec: Real-time Executive System

Main Steam Process Model

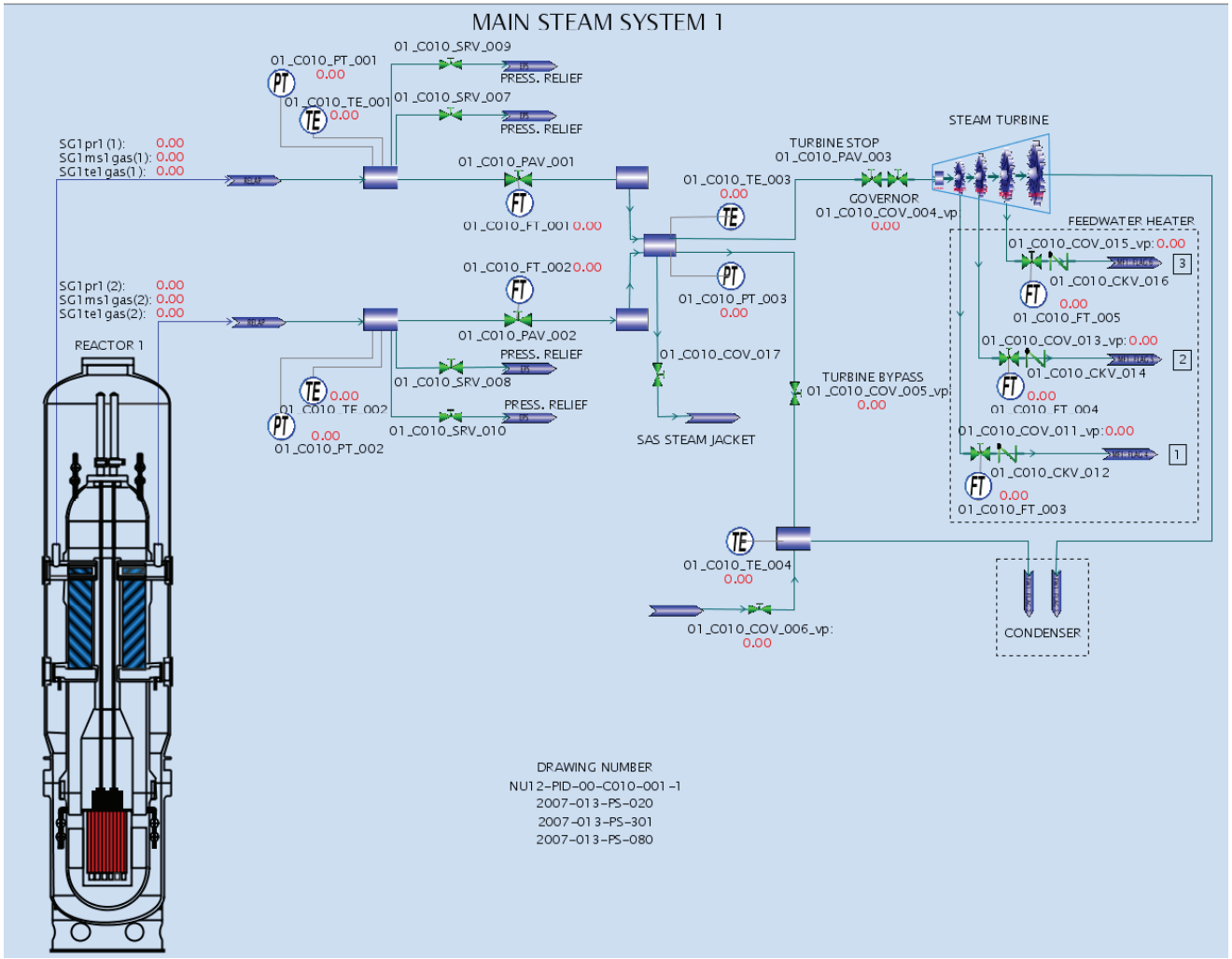

NuScale Power

Main Feed Water Process Model

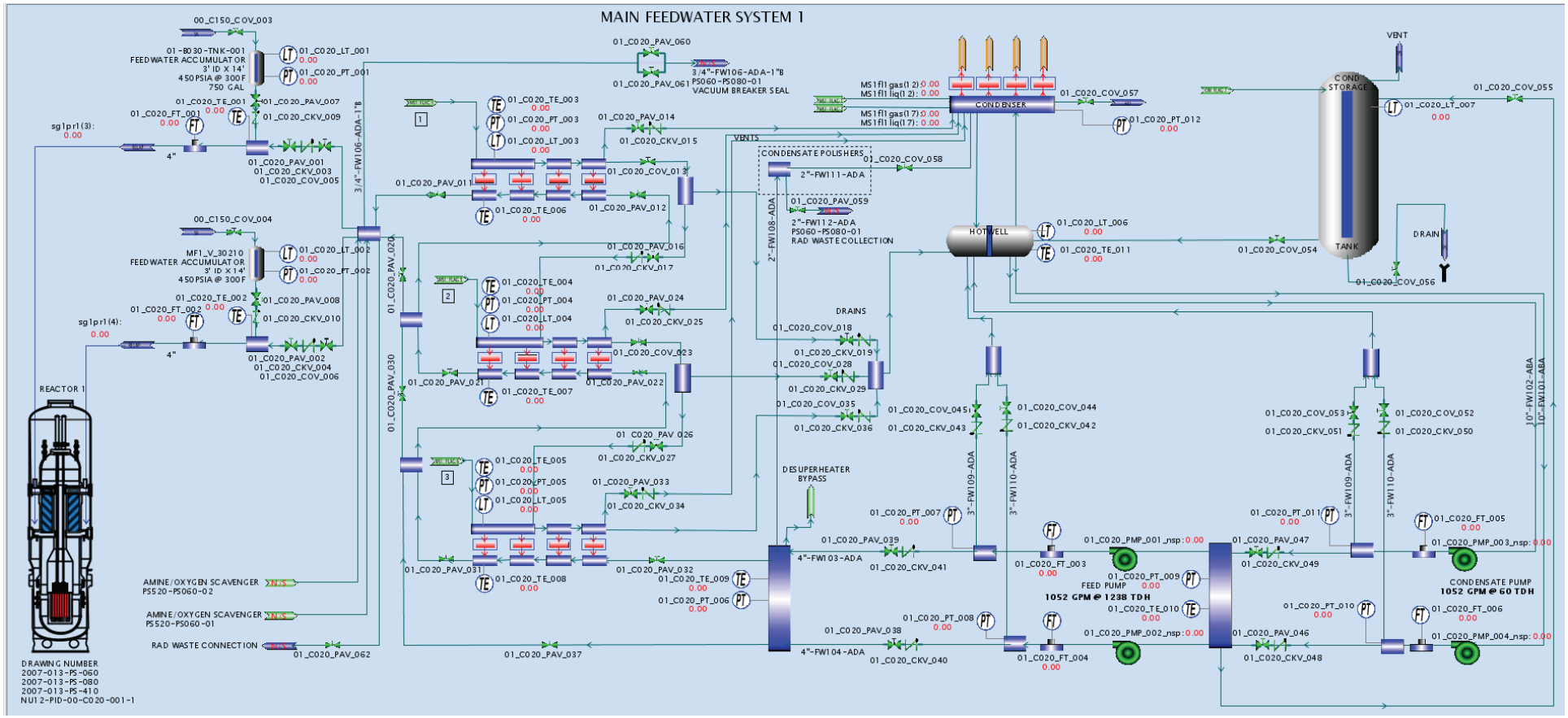

NuScale Power

Chemical and Volume Control Process Model

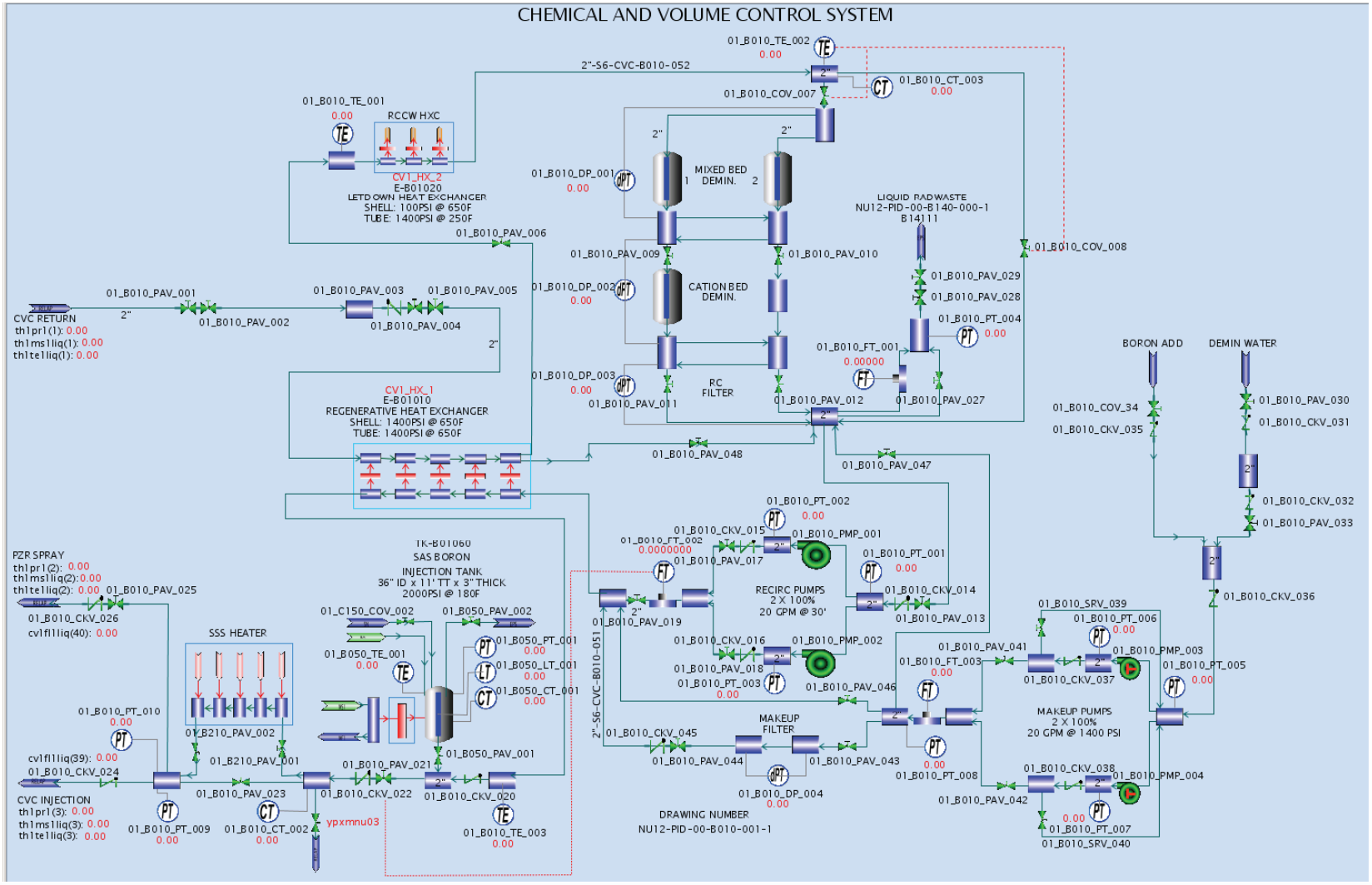

NuScale Power

Condenser Vacuum Control

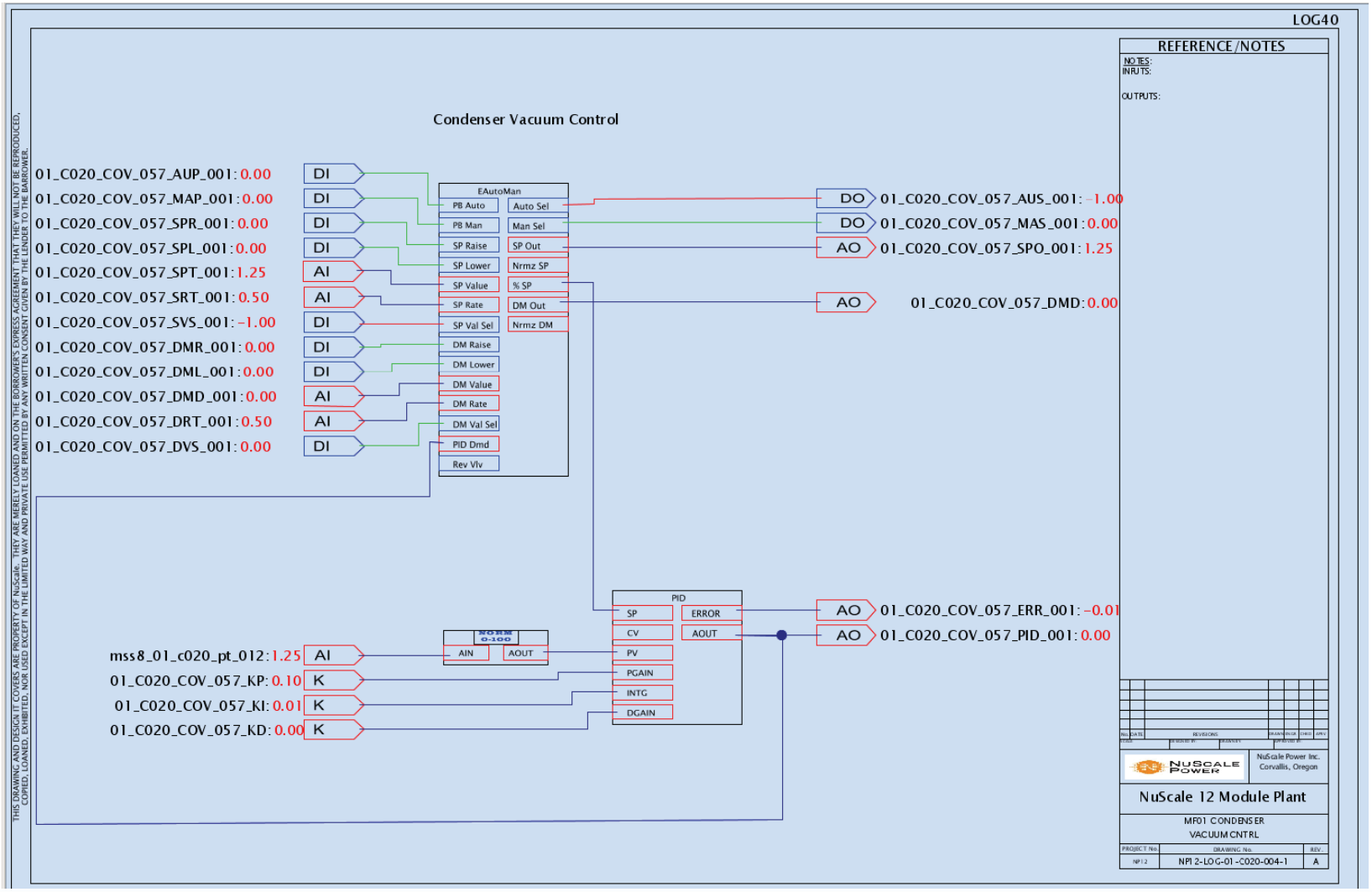

NuScale Power

Charging Pump Control Logic

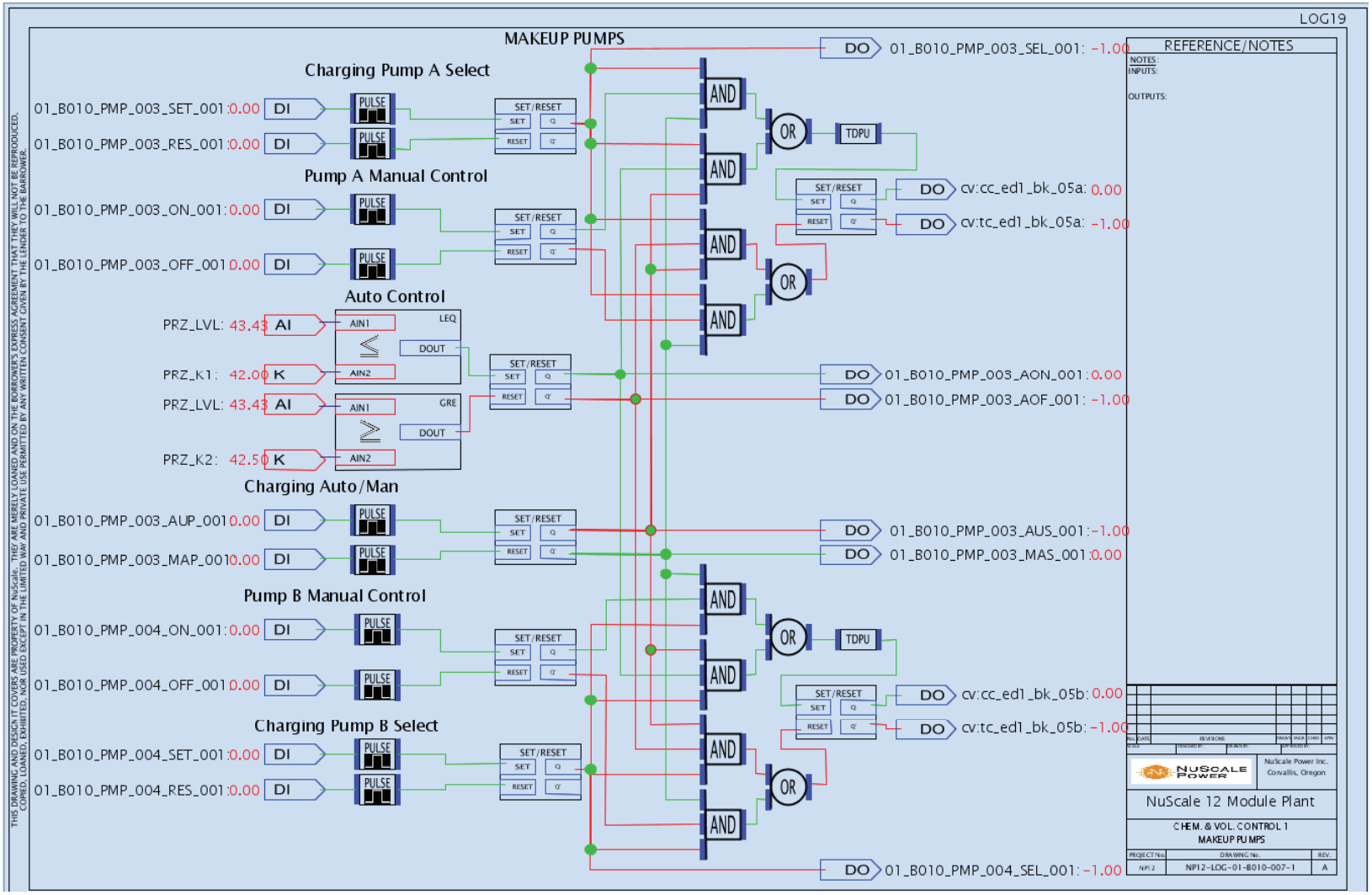

NuScale Power

Multi-module Control Room Layout

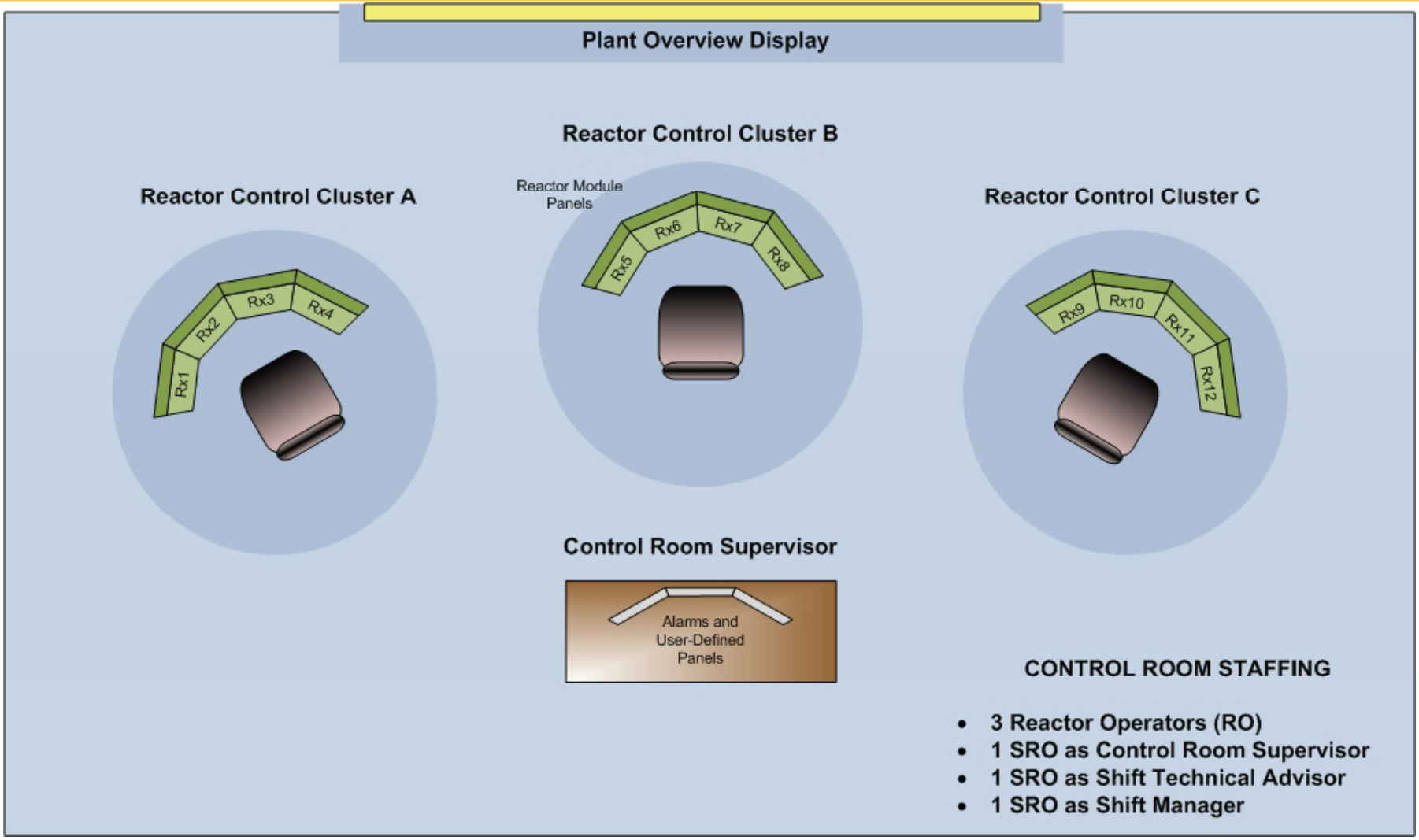

CONTROL ROOM STAFFING

- 3 Reactor Operators (RO)
- 1 SRO as Control Room Supervisor
- 1 SRO as Shift Technical Advisor
- 1 SRO as Shift Manager

Summary

- Control logic for plant systems being assessed using engineering simulator
- Development of full-scope simulator is underway
  - 12-Module Main Control Room Simulator

NuScale Power

201 NW 3rd Street
Corvallis, OR 97330
541-207-3931
nuscalepower.com