Field Report: Control Rod Drive Mechanism (CRDM) Number 4 Ultrasonic Results

Date: 5/26/2010

Intent:
The intent of this report is to provide the ultrasonic results from CRDM number 4, post repair, prior to the issuance of the final repair report (AREVA report number 51-9138844-000). This examination was performed by AREVA NP, Inc. under contract to FirstEnergy. ***This is an interim report.***

Report Composition:
This report is composed of four (4) parts:

1. RPV Head Penetration UT Data Sheet – Attachment 1
2. RPV Head Penetration UT Calibration Data Sheet – Attachment 2
3. Zetec µTomo General Settings & UT Probe Settings – Attachment 3
4. Scan Plan – Attachment 4

Procedures, personnel and equipment certifications will be provided in the final repair report (AREVA report number 51-9138844-000).

Examination Results:
Acceptable. See attached.

AREVA

RPV Head Penetration UT Data Sheet

Penetration Number:	4 Repair	Penetration Type:	☑ -CRDM ☐ -CEDM ☐ -ICI ☐ -Vent Line
Utility:	FirstEnergy Nuclear Operating Company	Plant: Davis Besse	Unit: 1 Outage / PO No.: RFO16
Procedure:	54-ISI-178-07: Ultrasonic Examination of Temperbead Weld Repairs on PWR Upper Head Nozzles and BWR Lower Head Housings & SDCN 30-9136841-002		

Essential Equipment Description

Manufacturer	Model	VH# or DB#	Serial Number	Cal. Due Date
Zetec	µTomoscan	VH-8514	81302	9/11/2010
UT Cable Type / Length:	RG174 - 63 ft	RG58 - n/a	No. of Connectors: 2	
UT Data Acquisition:	Zetec - Ultravision		Version: 1.1Q6	
UT Data Analysis:	Zetec - Ultravision		Version: 1.1Q6	

Scan Information:

Total Number of Files:	1	File Name(s):	
CRDM 4 Rotating 7500110 VH8514 .rdt			
Scan Start Θ:	-5 °	Scan End Θ:	364 °
Scan Start "Z"	-0.5 "	Scan End "Z"	8.0 "
Index Resolution:	2.0 °	Scan Resolution:	0.039 "
Scan Speed:	2.0 °/sec	Scan Complete:	Yes

Calibration Information:

Cal. Data Sheet:	CDS-15	n/a	n/a
Calibration Block ID:	6011930-003		

Component Information:

ID:	2.765 "	OD:	4.025 "
Thickness:	0.630 "	Material:	Inconel 600
RVH Examination Temp.:	74.5	° F	
Pyrometer S/N or VH No.:	VH-10798		
Pyrometer Cal. Due Date:	10/13/2010		

Examination Coverage

Axial Extent Above Up-Hill Weld Root:	6.48 "
Weld Width at Up-Hill Side:	n/a "
Axial Extent Below Low-Hill Weld Toe:	n/a "
Weld Width at Low-Hill Side:	n/a "
Required Examination Coverage Obtained	Yes
Examination Surface:	Bore ID-Machined

Search Unit Parameters

Transducer Manufacturer			Couplant
Sigma	n/a	n/a	De-Mineralized Water
Rotating Repair Head	n/a		n/a

Chan.	Angle/FD	Mode	Direction	Size	Freq.	S/N	Model
1	0°/0.45"	L	N/A	2(0.15" x 0.30") Rectangle	2.25	06001	2079
2	45°/0.45"	L	UP	2(0.30" x 0.20") Rectangle	2.25	06013	21GE
3	45°/0.45"	L	DN	2(0.30" x 0.20") Rectangle	2.25	06010	21GE
4	70°/0.69"	L	UP	2(0.72" x 0.21") Rectangle	2.25	06013	23A7
5	70°/0.69"	L	DN	2(0.72" x 0.21") Rectangle	2.25	06010	23A7
6	45°/0.45"	LE	CCW	2(0.30" x 0.20") Rectangle	2.25	06001	21GD
7	45°/0.45"	LE	CW	2(0.30" x 0.20") Rectangle	2.25	06001	21GD
-	-	-	-	-	-	-	-

Examination Results

☑ No Flaws Detected(1)

☐ Axial Flaws Detected

☐ Circ. Flaws Detected

☐ Other (specify below)

Leak Path Assessment Required: No

Remarks: Data Quality in Compliance with Section 9.0 ------> JDB 5/26/10 11:39 AM Inspection Head: 7500110

Traveler 50-9135674-002 Sequence 340-00

The circumferential reference (i.e., 0.0°) is located on down hill.

Note(1): Imperfection detected - not recordable per procedure step 13.3 - embedded within repair weld.

Analyzed By:	Jason D. Breza	Level: III	Date:	5/26/2010
Reviewed By:	Michael W Key	Level: III	Date:	5/26/2010
Utility Review By:	Dewey Munson	Level: III	Date:	5/26/2010
ANII Review By:	Bruce North	Level: n/a	Date:	5/26/2010

HSBCC

Attachment 1 – RPV Head Penetration UT Data Sheet

Overview:
The drawing provided below is an excerpt from AREVA drawing 02-8038215-000, "Davis Besse RV Head Map". The purpose of the drawing is to show the location of CRDM 4.

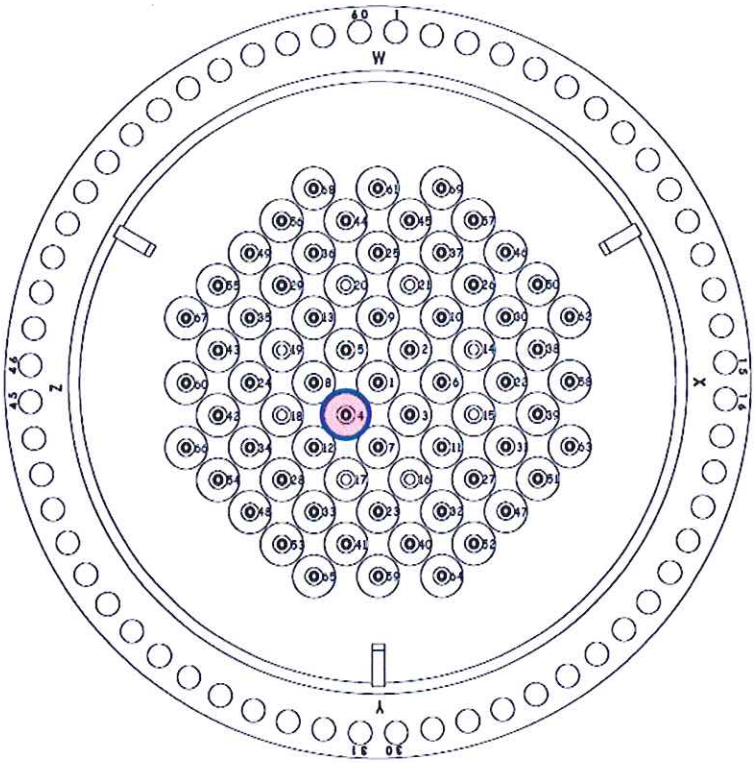

View: Top of Head Looking Down

Attachment 2 – RPV Head Penetration UT Calibration Data Sheet

General

This section contains the Calibration Data Sheets (CDS) that were used in the CRDM 4 post repair examination. The table shows the probe serial number, probe Angle and UT instrument number for the calibration data sheet (CDS) used in the calibration:

CDS	Channel / Angle	Probe Model - S/N	µTomo-UT VH number
15	Ch. 1 / 0°L	21DE-06001	VH-8514
	Ch. 2 / 45°L LKUP	21GE-06013	
	Ch. 3 / 45°L LKDN	21GE-06010	
	Ch. 4 / 70°L LKUP	23A7-06013	
	Ch. 5 / 70°L LKDN	23A7-06010	
	Ch. 6 / 45°L LKCW	21GD-06001	
	Ch. 7 / 45°L LKCCW	21GD-06001	

The following table indicates the given calibration data set (sheet) including the date start and stop for CRDM 4.

CDS-15 (Group C[1])			
Cal / CRDM	**Date**	**Time**	**VH-#**
Initial Cal	5/25/2010	0741	8514
CRDM 4	5/25/2010	0921	8514
Final Cal	5/25/2010	1105	8514

Final calibration time does *not* exceed 4 hours from initial calibration.

[1] Groups A and B are the examination periods for the twenty-three (23) other repairs completed in two (2) separate campaigns.

AREVA

RPV Head Penetration UT Calibration Data Sheet

Calibration Data Sheet Number: CDS-15 -A

Utility:	FirstEnergy Nuclear Operating Company	**Plant:**	Davis Besse	**Unit:**	1	**Outage:**	RFO16
Procedure:	54-ISI-178-07: Ultrasonic Examination of Temperbead Weld Repairs on PWR Upper Head Nozzles and BWR Lower Head Housings & SDCN 30-9136841-002						

Essential Equipment Description

Manufacturer	Model	VH# or DB#	Serial Number:	Cal Due Date:
Zetec	µTomoscan	VH-8514	81302	9/11/2010

UT Cable Type / Length:	RG174	63 ft	RG58	n/a	**No. of Connectors:**	2
UT Data Acquisition / Version:	Zetec - Ultravision	1.1Q6				
UT Data Analysis / Version:	Zetec - Ultravision	1.1Q6				

Calibration Block Description

Calibration Block ID:	6011930-003	**Material:**	Inconel 600	**ID:**	2.765	**OD:**	4.063	**Thickness:**	0.649

Transducer Information

Channel:	1	**Angle/FD**	0°/0.45"	**Mode:**	L	**Freq.:**	2.25	**MHz**	
Direction:	N/A	**S/N:**	06001	**Size:**	2(0.15" x 0.30") Rectangle	**Model:**	2079		

Reflector Information				Calibration Verification Information					
	ID		Depth		Measured Depth		Amplitude		Global Gain	
Initial	H6		0.136	"	0.136	"	40.3	%	26.5	dB
	H5		0.451	"	0.440	"	80.0	%	26.5	dB
	Date:	5/26/2010	Time:		7:41 AM		File:	Initial Cal 4 Repair Rotating 7500110 VH8514 .rdt		
	Analyzed By:		Jason D. Breza					Level:	III	
Intermediate Not Used										
			n/a						n/a	
Intermediate Not Used										
			n/a						n/a	
Intermediate Not Used										
			n/a						n/a	
Intermediate	ID		Depth		Measured Depth		Amplitude		Global Gain	
	H6		0.136	"	0.130	"	40.3	%	27.5	dB
	H5		0.451	"	0.445	"	80.0	%	26.0	dB
	Date:	5/26/2010	Time:		10:33 AM		File:	Final Cal 4 Repair Rotating 7500110 VH8514 .rdt		
	Analyzed By:		Jason D. Breza					Level:	III	

Scan & Range Information

Scan Start		Range		Sync Interval		Index Resolution		Scan Speed		Comments
-0.218	in	2.775	in	0.039	in	2	deg	2.0	in/sec	

Calibration Velocity & Wedge Delay

Sound Velocity:	0.2813	in/uS	**Wedge Delay**	6.633	uS

Notes:

Inspection Head Number: 7500110

Calibration block Temperature: 74.5°F Therm. VH 10798 Cal Due Date: 10/13/2010

AREVA

RPV Head Penetration UT Calibration Data Sheet

Calibration Data Sheet Number: CDS-15 -B

Utility:	FirstEnergy Nuclear Operating Company	Plant:	Davis Besse	Unit:	1	Outage:	RFO16
Procedure:	54-ISI-178-07: Ultrasonic Examination of Temperbead Weld Repairs on PWR Upper Head Nozzles and BWR Lower Head Housings & SDCN 30-9136841-002						

Essential Equipment Description

Manufacturer	Model	VH# or DB#	Serial Number:	Cal Due Date:
Zetec	µTomoscan	VH-8514	81302	9/11/2010

UT Cable Type / Length:	RG174	63 ft	RG58	n/a	No. of Connectors:	2
UT Data Acquisition / Version:	Zetec - Ultravision	1.1Q6				
UT Data Analysis / Version:	Zetec - Ultravision	1.1Q6				

Calibration Block Description

Calibration Block ID:	6011930-003	Material:	Inconel 600	ID:	2.765	OD:	4.063	Thickness:	0.649

Transducer Information

Channel:	2	Angle/FD	45°/0.45"	Mode:	L	Freq.	2.25	MHz	
Direction:	UP	S/N:	06013	Size:	2(0.30" x 0.20") Rectangle	Model:	21GE		

Reflector Information				Calibration Verification Information					
	ID		Depth		Measured Depth		Amplitude		Global Gain	
Initial	H6		0.150	"	0.142	"	81.0	%	18.5	dB
	H5		0.465	"	0.457	"	50.7	%	18.5	dB
	Date:	5/26/2010	Time:		7:41 AM		File:	Initial Cal 4 Repair Rotating 7500110 VH8514 .rdt		
	Analyzed By:		Jason D. Breza					Level:	III	
Intermediate Not Used										
			n/a						n/a	
Intermediate Not Used										
			n/a						n/a	
Intermediate Not Used										
			n/a						n/a	
Intermediate	ID		Depth		Measured Depth		Amplitude		Global Gain	
	H6		0.150	"	0.134	"		%	19.0	dB
	H5		0.465	"	0.473	"	51	%	18.0	dB
	Date:	5/26/2010	Time:		10:33 AM		File:	Final Cal 4 Repair Rotating 7500110 VH8514 .rdt		
	Analyzed By:		Jason D. Breza					Level:	III	

Scan & Range Information

Scan Start		Range		Sync Interval		Index Resolution		Scan Speed		Comments
-0.200	In	2.504	In	0.039	In	2.0	deg	2.0	In/sec	

Calibration Velocity & Wedge Delay

Sound Velocity:	0.2784	In/uS	Wedge Delay	6.836	uS

Notes:

Inspection Head Number: 7500110

Calibration block Temperature: 74.5°F Therm. VH 10798 Cal Due Date: 10/13/2010

AREVA

RPV Head Penetration UT Calibration Data Sheet

Calibration Data Sheet Number: CDS-15 -C

Utility:	FirstEnergy Nuclear Operating Company	Plant:	Davis Besse	Unit:	1	Outage:	RFO16
Procedure:	54-ISI-178-07: Ultrasonic Examination of Temperbead Weld Repairs on PWR Upper Head Nozzles and BWR Lower Head Housings & SDCN 30-9136841-002						

Essential Equipment Description

Manufacturer	Model	VH# or DB#	Serial Number:	Cal Due Date:
Zetec	µTomoscan	VH-8514	81302	9/11/2010

UT Cable Type / Length:	RG174	63 ft	RG58	n/a	No. of Connectors:	2
UT Data Acquisition / Version:	Zetec - Ultravision	1.1Q6				
UT Data Analysis / Version:	Zetec - Ultravision	1.1Q6				

Calibration Block Description

Calibration Block ID:	6011930-003	Material:	Inconel 600	ID:	2.765	OD:	4.063	Thickness:	0.649

Transducer Information

Channel:	3	Angle/FD	45°/0.45"	Mode:	L	Freq.	2.25	MHz	
Direction:	DN	S/N:	06010	Size:	2(0.30" x 0.20") Rectangle	Model:	21GE		

	Reflector Information			Calibration Verification Information					
Initial	ID	Depth		Measured Depth		Amplitude		Global Gain	
	H6	0.150	"	0.143	"	82.0	%	20.5	dB
	H5	0.465	"	0.452	"	46.0	%	20.5	dB
	Date: 5/26/2010		Time:	7:41 AM		File:	Initial Cal 4 Repair Rotating 7500110 VH8514.rdt		
	Analyzed By:	Jason D. Breza					Level:	III	
Intermediate Not Used									
		n/a						n/a	
Intermediate Not Used									
		n/a						n/a	
Intermediate Not Used									
		n/a						n/a	
Intermediate	ID	Depth		Measured Depth		Amplitude		Global Gain	
	H6	0.150	"	0.147	"	82	%	20.5	dB
	H5	0.465	"	0.449	"	46	%	21.0	dB
	Date: 5/26/2010		Time:	10:33 AM		File:	Final Cal 4 Repair Rotating 7500110 VH8514.rdt		
	Analyzed By:	Jason D. Breza					Level:	III	

Scan & Range Information

Scan Start		Range		Sync Interval		Index Resolution		Scan Speed		Comments
-0.201	in	2.506	in	0.039	in	2.0	deg	2.0	in/sec	

Calibration Velocity & Wedge Delay

Sound Velocity:	0.2701	in/uS	Wedge Delay	6.663	uS

Notes:

Inspection Head Number: 7500110

Calibration block Temperature: 74.5°F Therm. VH 10798 Cal Due Date: 10/13/2010

AREVA

RPV Head Penetration UT Calibration Data Sheet

Calibration Data Sheet Number: CDS-15 -D

Utility:	FirstEnergy Nuclear Operating Company	Plant:	Davis Besse	Unit:	1	Outage:	RFO16
Procedure:	54-ISI-178-07: Ultrasonic Examination of Temperbead Weld Repairs on PWR Upper Head Nozzles and BWR Lower Head Housings & SDCN 30-9136841-002						

Essential Equipment Description

Manufacturer	Model	VH# or DB#	Serial Number:	Cal Due Date:
Zetec	µTomoscan	VH-8514	81302	9/11/2010

UT Cable Type / Length:	RG174	63 ft	RG58	n/a	No. of Connectors:	2
UT Data Acquisition / Version:	Zetec - Ultravision 1.1Q6					
UT Data Analysis / Version:	Zetec - Ultravision 1.1Q6					

Calibration Block Description

Calibration Block ID:	6011930-003	Material:	Inconel 600	ID:	2.765	OD:	4.063	Thickness:	0.649

Transducer Information

Channel:	4	Angle/FD	70°/0.69"	Mode:	L	Freq.	2.25	MHz	
Direction:	UP	S/N:	06013	Size:	2(0.72" x 0.21") Rectangle	Model:	23A7		

	Reflector Information			Calibration Verification Information					
	ID		Depth	Measured Depth		Amplitude		Global Gain	
Initial	H6		0.167 "	0.175 "		81.8 %		24.5 dB	
	H5		0.482 "	0.475 "		23.7 %		24.5 dB	
	Date:	5/26/2010	Time:	7:41 AM		File:	Initial Cal 4 Repair Rotating 7500110 VH8514 .rdt		
	Analyzed By:		Jason D. Breza				Level:	III	
Intermediate Not Used									
			n/a					n/a	
Intermediate Not Used									
			n/a					n/a	
Intermediate Not Used									
			n/a					n/a	
Intermediate	ID		Depth	Measured Depth		Amplitude		Global Gain	
	H6		0.167 "	0.173 "		82 %		24.5 dB	
	H5		0.482 "	0.472 "		24 %		24.5 dB	
	Date:	5/26/2010	Time:	10:33 AM		File:	Final Cal 4 Repair Rotating 7500110 VH8514 .rdt		
	Analyzed By:		Jason D. Breza				Level:	III	

Scan & Range Information

Scan Start	Range	Sync Interval	Index Resolution	Scan Speed	Comments
-0.163 in	2.501 in	0.039 in	2.0 deg	2.0 in/sec	

Calibration Velocity & Wedge Delay

Sound Velocity:	0.2939 in/uS	Wedge Delay	9.319 uS

Notes:

Inspection Head Number: 7500110

Calibration block Temperature: 74.5°F Therm. VH 10798 Cal Due Date: 10/13/2010

Attachment 2 – RPV Head Penetration UT Calibration Data Sheet (continued)

AREVA

RPV Head Penetration UT Calibration Data Sheet

Calibration Data Sheet Number: CDS-15 -E

Utility:	FirstEnergy Nuclear Operating Company	Plant:	Davis Besse	Unit:	1	Outage:	RFO16
Procedure:	54-ISI-178-07: Ultrasonic Examination of Temperbead Weld Repairs on PWR Upper Head Nozzles and BWR Lower Head Housings & SDCN 30-9136841-002						

Essential Equipment Description

Manufacturer	Model	VH# or DB#	Serial Number:	Cal Due Date:
Zetec	µTomoscan	VH-8514	81302	9/11/2010

UT Cable Type / Length:	RG174	63 ft	RG58	n/a	No. of Connectors:	2
UT Data Acquisition / Version:					Zetec - Ultravision	1.1Q6
UT Data Analysis / Version:					Zetec - Ultravision	1.1Q6

Calibration Block Description

Calibration Block ID:	6011930-003	Material:	Inconel 600	ID:	2.765	OD:	4.063	Thickness:	0.649

Transducer Information

Channel:	5	Angle/FD	70°/0.69"	Mode:	L	Freq.	2.25	MHz	
Direction:	DN	S/N:	06010	Size:	2(0.72" x 0.21") Rectangle	Model:	23A7		

	Reflector Information			Calibration Verification Information					
	ID		Depth	Measured Depth		Amplitude		Global Gain	
Initial	H6		0.167 "	0.177 "		81.8	%	24.5	dB
	H5		0.482 "	0.500 "		26.6	%	24.5	dB
	Date:	5/26/2010	Time:	7:41 AM		File:	Initial Cal 4 Repair Rotating 7500110 VH8514 .rdt		
	Analyzed By:		Jason D. Breza				Level:	III	
Intermediate Not Used									
	H6								
			n/a					n/a	
Intermediate Not Used									
			n/a					n/a	
Intermediate Not Used									
			n/a					n/a	
Intermediate	ID		Depth	Measured Depth		Amplitude		Global Gain	
	H6		0.167 "	0.162 "		82	%	24.0	dB
	H5		0.482 "	0.505 "		27	%	23.5	dB
	Date:	5/26/2010	Time:	11:05 AM		File:	Final Cal 4 Repair-1 Rotating 7500110 VH8514 .rdt		
	Analyzed By:		Jason D. Breza				Level:	III	

Scan & Range Information

Scan Start		Range		Sync Interval		Index Resolution		Scan Speed		Comments
-0.201	In	2.500	In	0.039	In	2.0	deg	2.0	In/sec	

Calibration Velocity & Wedge Delay

Sound Velocity:	0.3684	In/uS	Wedge Delay	10.189	uS

Notes:

Inspection Head Number: 7500110

Calibration block Temperature: 74.5°F Therm. VH 10798 Cal Due Date: 10/13/2010

Attachment 2 – RPV Head Penetration UT Calibration Data Sheet (continued)

AREVA

RPV Head Pentration UT Calibration Data Sheet

Calibration Data Sheet Number: CDS-15 -F

Utility:	FirstEnergy Nuclear Operating Company	Plant:	Davis Besse	Unit:	1	Outage:	RFO16
Procedure:	54-ISI-178-07: Ultrasonic Examination of Temperbead Weld Repairs on PWR Upper Head Nozzles and BWR Lower Head Housings & SDCN 30-9136841-002						

Essential Equipment Description

Manufacturer	Model	VH# or DB#	Serial Number:	Cal Due Date:
Zetec	µTomoscan	VH-8514	81302	9/11/2010

UT Cable Type / Length:	RG174	63 ft	RG58	n/a	No. of Connectors:	2
UT Data Acquisition / Version:	Zetec - Ultravision 1.1Q6					
UT Data Analysis / Version:	Zetec - Ultravision 1.1Q6					

Calibration Block Description

Calibration Block ID:	6011930-003	Material:	Inconel 600	ID:	2.765	OD:	4.063	Thickness:	0.649

Transducer Information

Channel:	6	Angle/FD	45°/0.45"	Mode:	LE	Freq.	2.25	MHz	
Direction:	CCW	S/N:	06001	Size:	2(0.30" x 0.20") Rectangle	Model:	21GD		

Reflector Information				Calibration Verification Information					
Initial	ID	Depth		Measured Depth		Amplitude		Global Gain	
	H3	0.103	"	0.116	"	29.8	%	18.0	dB
	H2	0.417	"	0.408	"	79.2	%	18.0	dB
	Date: 5/26/2010		Time:	7:41 AM		File:	Initial Cal 4 Repair Rotating 7500110 VH8514 .rdt		
	Analyzed By:	Michael W Key					Level:	III	
Intermediate Not Used									
		n/a						n/a	
Intermediate Not Used									
		n/a						n/a	
Intermediate Not Used									
		n/a						n/a	
Intermediate	ID	Depth		Measured Depth		Amplitude		Global Gain	
	H3	0.103	"	0.116	"	30	%	16.0	dB
	H2	0.417	"	0.408	"	79	%	18.0	dB
	Date: 5/26/2010		Time:	10:33 AM		File:	Final Cal 4 Repair-1 Rotating 7500110 VH8514 .rdt		
	Analyzed By:	Jason D. Breza					Level:	III	

Scan & Range Information

Scan Start		Range		Sync Interval		Index Resolution		Scan Speed		Comments
-0.211	in	2.979	in	0.039	in	2.0	deg	2.0	in/sec	

Calibration Velocity & Wedge Delay

Sound Velocity:	0.3172	in/uS	Wedge Delay	6.802	uS

Notes:

Inspection Head Number: 7500110

Calibration block Temperature: 74.5°F Therm. VH 10798 Cal Due Date: 10/13/2010

AREVA

RPV Head Pentration UT Calibration Data Sheet

Calibration Data Sheet Number: CDS-15 -F

Utility:	FirstEnergy Nuclear Operating Company	Plant:	Davis Besse	Unit:	1	Outage:	RFO16
Procedure:	54-ISI-178-07: Ultrasonic Examination of Temperbead Weld Repairs on PWR Upper Head Nozzles and BWR Lower Head Housings & SDCN 30-9136841-002						

Essential Equipment Description

Manufacturer	Model	VH# or DB#	Serial Number:	Cal Due Date:
Zetec	µTomoscan	VH-8514	81302	9/11/2010

UT Cable Type / Length:	RG174	63 ft	RG58	n/a	No. of Connectors:	2
UT Data Acquisition / Version:	Zetec - Ultravision	1.1Q6				
UT Data Analysis / Version:	Zetec - Ultravision	1.1Q6				

Calibration Block Description

Calibration Block ID:	6011930-003	Material:	Inconel 600	ID:	2.765	OD:	4.063	Thickness:	0.649

Transducer Information

Channel:	7	Angle/FD	45°/0.45"	Mode:	LE	Freq.	2.25	MHz	
Direction:	CW	S/N:	06001	Size:	2(0.30" x 0.20") Rectangle	Model:	21GD		

	Reflector Information			Calibration Verification Information					
Initial	ID	Depth		Measured Depth		Amplitude		Global Gain	
	H3	0.103	"	0.094	"	28.1	%	17.5	dB
	H2	0.417	"	0.408	"	80.5	%	17.5	dB
	Date: 5/26/2010		Time:	7:41 AM		File:	Inital Cal 4 Repair Rotating 7500110 VH8514 .rdt		
	Analyzed By:	Michael W Key					Level:	III	
Intermediate Not Used									
		n/a						n/a	
Intermediate Not Used									
		n/a						n/a	
Intermediate Not Used									
		n/a						n/a	
Intermediate	ID	Depth		Measured Depth		Amplitude		Global Gain	
	H3	0.103	"	0.112	"	28	%	16.0	dB
	H2	0.417	"	0.408	"	81	%	18.0	dB
	Date: 5/26/2010		Time:	10:33 AM		File:	Final Cal 4 Repair-1 Rotating 7500110 VH8514 .rdt		
	Analyzed By:	Jason D. Breza					Level:	III	

Scan & Range Information

Scan Start		Range		Sync Interval		Index Resolution		Scan Speed		Comments
-0.202	in	2.616	in	0.039	in	2.0	deg	2.0	in/sec	

Calibration Velocity & Wedge Delay

Sound Velocity:	0.3042	in/uS	Wedge Delay	6.722	uS

Notes:
Inspection Head Number: 7500110
Calibration block Temperature: 74.5°F Therm. VH 10798 Cal Due Date: 10/13/2010

Attachment 3 – Zetec µTomo General Settings & UT Probe Settings

µTomo General Settings

ZETEC

Acquisition information

UltraVision 1.1Q6 Hardware Used: Microtomo Date: 26/05/2010 8:44:17 AM

G:\UTData\REPAIR\CRDM 4 Rotating 7500110 VH8514.rdt

Analysis information

UltraVision 1.1Q6 FileSize: 209.5 Mb Date: 26/05/2010 0:15:45 PM

G:\Davis Besse UT Data\Repair CRDM Examination\REPAIR\Data\Round D\CRDM 4 Rotating 7500110 VH8514.rdt

Channel 1 : CH #1 - 0 deg

TGC ☐

General Settings

Gain: 0 dB 25 dB Booster: ☐ Time base Start: -1.55 µs Time base Range: 19.52 µs

Pulser - Receiver Settings

Configuration	P	R	Voltage	Pulse Width	Type	Rectification	HP Filter	LP Filter	Smoothing
Pitch and Catch	P 1	R 1	300 V	222 ns	Log	Unsigned	None	None	None

Digitizing and Processing Settings

Dig. Frequency: 25,00 MHz
AVG: 1
Acq Rate: 60 Acq/s

Recurrence: 2000 Hz
Samples: 488
Resolution: 8 BIT
Use Remote P/R ☐

Synchro: On Pulse
A-scan ☑
Video A-scan ☐

Multi-Peak ☐
Full A-Scan
M-P Qty: 0
M-P Threshold: 0 %

Channel 2 : CH #2 - 45L up

TGC ☐

General Settings

Gain: 0 dB 25 dB Booster: ☐ Time base Start: -2.04 µs Time base Range: 25.44 µs

Pulser - Receiver Settings

Configuration	P	R	Voltage	Pulse Width	Type	Rectification	HP Filter	LP Filter	Smoothing
Pitch and Catch	P 2	R 2	300 V	222 ns	Log	Unsigned	None	None	None

Digitizing and Processing Settings

Dig. Frequency: 25,00 MHz
AVG: 1
Acq Rate: 60 Acq/s

Recurrence: 2000 Hz
Samples: 636
Resolution: 8 BIT
Use Remote P/R ☐

Synchro: On Pulse
A-scan ☑
Video A-scan ☐

Multi-Peak ☐
Full A-Scan
M-P Qty: 0
M-P Threshold: 0 %

General Settings

Note: Acq Rate less than 100 Acq/Sec. Per procedure, no data drop out detected in data, as such the scan speed is acceptable for given rate.

Attachment 3 – Zetec µTomo General Settings & UT Probe Settings (continued)

Channel 3 : CH #3 - 45L down TGC ☐

General Settings

Gain: 0 dB 25 dB Booster: ☐ Time base Start: -2.10 µs Time base Range: 26.24 µs

Pulser - Receiver Settings

Configuration	P	R	Voltage	Pulse Width	Type	Rectification	HP Filter	LP Filter	Smoothing
Pitch and Catch	P 3	R 3	300 V	222 ns	Log	Unsigned	None	None	None

Digitizing and Processing Settings

Dig. Frequency: 25,00 MHz
AVG: 1
Acq Rate: 60 Acq/s

Recurrence: 2000 Hz
Samples: 656
Resolution: 8 BIT
Use Remote P/R ☐

Synchro: On Pulse
A-scan ☑
Video A-scan ☐

Multi-Peak ☐
Full A-Scan
M-P Qty: 0
M-P Threshold: 0 %

Channel 4 : CH #4 - 70L up TGC ☐

General Settings

Gain: 0 dB 25 dB Booster: ☐ Time base Start: -3.24 µs Time base Range: 49.76 µs

Pulser - Receiver Settings

Configuration	P	R	Voltage	Pulse Width	Type	Rectification	HP Filter	LP Filter	Smoothing
Pitch and Catch	P 4	R 4	300 V	222 ns	Log	Unsigned	None	None	None

Digitizing and Processing Settings

Dig. Frequency: 25,00 MHz
AVG: 1
Acq Rate: 60 Acq/s

Recurrence: 2000 Hz
Samples: 1244
Resolution: 8 BIT
Use Remote P/R ☐

Synchro: On Pulse
A-scan ☑
Video A-scan ☐

Multi-Peak ☐
Full A-Scan
M-P Qty: 0
M-P Threshold: 0 %

Channel 5 : CH #5 - 70L down TGC ☐

General Settings

Gain: 0 dB 25 dB Booster: ☐ Time base Start: -3.19 µs Time base Range: 39.68 µs

Pulser - Receiver Settings

Configuration	P	R	Voltage	Pulse Width	Type	Rectification	HP Filter	LP Filter	Smoothing
Pitch and Catch	P 5	R 5	300 V	222 ns	Log	Unsigned	None	None	None

Digitizing and Processing Settings

Dig. Frequency: 25,00 MHz
AVG: 1
Acq Rate: 60 Acq/s

Recurrence: 2000 Hz
Samples: 992
Resolution: 8 BIT
Use Remote P/R ☐

Synchro: On Pulse
A-scan ☑
Video A-scan ☐

Multi-Peak ☐
Full A-Scan
M-P Qty: 0
M-P Threshold: 0 %

General Settings

Note: Acq Rate less than 100 Acq/Sec. Per procedure, no data drop out detected in data, as such the scan speed is acceptable for given rate.

Attachment 3 – Zetec µTomo General Settings & UT Probe Settings (continued)

Channel 6 : CH #6 - 45LE CCW TGC ☐

General Settings

Gain: 0 dB 25 dB Booster: ☐ Time base Start: -1.88 µs Time base Range: 26.56 µs

Pulser - Receiver Settings

Configuration	P	R	Voltage	Pulse Width	Type	Rectification	HP Filter	LP Filter	Smoothing
Pitch and Catch	P 6	R 6	300 V	222 ns	Log	Unsigned	None	None	None

Digitizing and Processing Settings

Dig. Frequency: 25,00 MHz
AVG: 1
Acq Rate: 60 Acq/s

Recurrence: 2000 Hz
Samples: 664
Resolution: 8 BIT
Use Remote P/R ☐

Synchro: On Pulse
A-scan ☑
Video A-scan ☐

Multi-Peak ☐
Full A-Scan
M-P Qty: 0
M-P Threshold: 0 %

Channel 7 : CH #7 - 45LE CW TGC ☐

General Settings

Gain: 0 dB 25 dB Booster: ☐ Time base Start: -1.88 µs Time base Range: 24.32 µs

Pulser - Receiver Settings

Configuration	P	R	Voltage	Pulse Width	Type	Rectification	HP Filter	LP Filter	Smoothing
Pitch and Catch	P 7	R 7	300 V	222 ns	Log	Unsigned	None	None	None

Digitizing and Processing Settings

Dig. Frequency: 25,00 MHz
AVG: 1
Acq Rate: 60 Acq/s

Recurrence: 2000 Hz
Samples: 608
Resolution: 8 BIT
Use Remote P/R ☐

Synchro: On Pulse
A-scan ☑
Video A-scan ☐

Multi-Peak ☐
Full A-Scan
M-P Qty: 0
M-P Threshold: 0 %

General Settings

Note: Acq Rate less than 100 Acq/Sec. Per procedure, no data drop out detected in data, as such the scan speed is acceptable for given rate.

Attachment 3 – Zetec µTomo General Settings & UT Probe Settings (continued)

Probe Settings

ZETEC

Acquisition information

UltraVision 1.1Q6 Hardware Used: Microtomo Date: 26/05/2010 8:44:17 AM

G:\UTData\REPAIR\CRDM 4 Rotating 7500110 VH8514.rdt

Analysis information

UltraVision 1.1Q6 FileSize: 209.5 Mb Date: 26/05/2010 0:15:45 PM

G:\Davis Besse UT Data\Repair CRDM Examination\REPAIR\Data\Round D\CRDM 4 Rotating 7500110 VH8514.rdt

Channel	Probe Name	Snd vel. [m/s]	W. Delay [µs]	Scan Offset [mm]	Index Offset [mm]	Angle [°]	Skew [°]	TOFD Position	
								Separ.	Orientation
CH #1 - 0 deg	2079-06001	7145.0	6.63	0.00	0.00	0	0	0	Perpendicular
CH #2 - 45L up	21GE-06013	7071.4	6.84	-54.61	0.34	45	0	0	Perpendicular
CH #3 - 45L down	21GE-06010	6860.5	6.66	-57.15	0.20	45	180	0	Perpendicular
CH #4 - 70L up	23A7-06013	7465.1	9.32	-57.15	0.02	70	0	0	Perpendicular
CH #5 - 70L down	23A7-06010	9357.4	10.19	-57.15	0.16	70	180	0	Perpendicular
CH #6 - 45LE CC	21GD-06001	8056.9	6.80	0.00	0.02	45	90	0	Perpendicular
CH #7 - 45LE CW	21GD-06001	7726.7	6.72	0.00	0.33	45	270	0	Perpendicular

Note: The velocity is given in meters per second (m/s). To convert the value to inches per second (in/s) multiply the value by 39.37in/m. That is 7145.0m/sX39.37in/m=281,298in/s. This equates to 0.2812in/µs.

Attachment 4 – Scan Plan

Davis-Besse Scan Plan Baseline REPAIR

Rotating Scan Plan as follows:

1. (Rotation) Position the 0° transducer on the down hill side.
2. (Rotation) Set the circ encoder to 0.0°.
3. Drive the tool head into the repair region and monitor the 0° transducer.
4. (Scan) Position the 0° transducer at the IDTB lower extent. See Figure.
5. (scan) Set the axial encoder to 0.000".
6. Scan plan has +10° overlap in rotation and +1" in scan distance.

Item	Penetration No.	Scan "Z" (in inches)		Index "Theta" (in degs)	
		Stop	Start + Margin	Start	Stop + Margin
1	1	-0.5	7.7	-5	365
2	3	-0.5	7.7	-5	365
3	**4**	**-0.5**	**7.7**	**-5**	**365**
4	10	-0.5	7.7	-5	365
5	16	-0.5	7.7	-5	365
6	21	-0.5	7.7	-5	365
7	24	-0.5	7.7	-5	365
8	27	-0.5	7.7	-5	365
9	28	-0.5	7.7	-5	365
10	29	-0.5	7.7	-5	365
11	33	-0.5	7.7	-5	365
12	40	-0.5	7.7	-5	365
13	43	-0.5	7.7	-5	365
14	48	-0.5	7.7	-5	365
15	51	-0.5	7.7	-5	365
16	55	-0.5	7.7	-5	365
17	57	-0.5	7.7	-5	365
18	58	-0.5	7.7	-5	365
19	59	-0.5	7.7	-5	365
20	60	-0.5	7.7	-5	365
21	61	-0.5	7.7	-5	365
22	64	-0.5	7.7	-5	365
23	66	-0.5	7.7	-5	365
24	67	-0.5	7.7	-5	365

Scan Margin - 1.0 "
Index Margin - 5 °

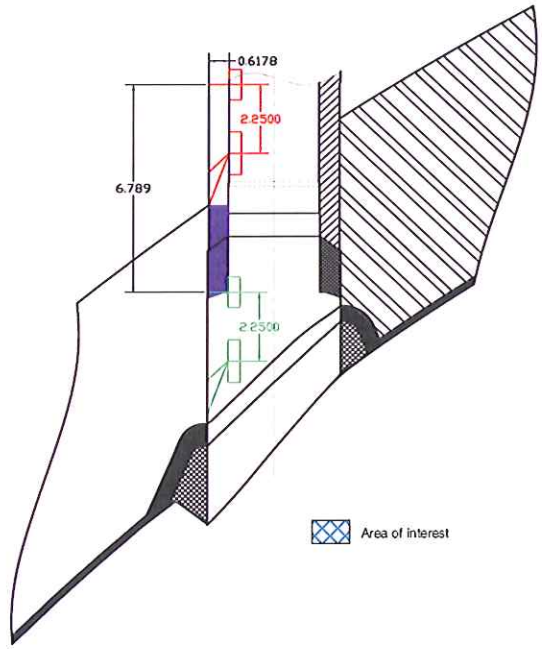

AREVA

LIQUID PENETRANT EXAMINATION

Customer: FENOC / Davis Besse	Exam Date: 05/26/10	Time: 0212	NDE Report No.: NOZ 4-NDE-320-00
System / Component I.D.: Reactor Vessel Head			Contract No.: L.500466
Component Description: CRDM Nozzle #4			Nominal Thickness: > 2.0"
Stage Of Fabrication: Post Weld	ISO Drawing No: 02-9134305E-004	SRS Card Number: DB# 14043	VT-1 Character Verified: Initial: ☒ Final: ☒
Surface: Machined	Procedure No. & Rev / SDCN: 54-ISI-244-12		Temperature: 77.3°

M&TE No (Thermometer): VH-10798	Calibration Due Date: 10/13/10	Exam Area / Figure: See Dwg. 02-9134305E-004
M&TE No. (Light Meter): NA	Calibration Due Date: NA	Light Intensity: Adequate
Cleaner Batch: 10A059	Type: SKC-S	Manufacturer: Magnaflux
Penetrant Batch: 09L097	Type: SKL-WP2	Manufacturer: Magnaflux
Developer Batch: 10A047	Type: SKD-S2	Manufacturer: Magnaflux

Pre Cleaning Drying Time: 26 min.	Penetrant Dwell Time: 31 min.	Water Rinse Time: 7 min.	Water Pressure: 3 PSI
Water Rinse Drying Time: 15 min.	Developer Time: 26 min.	Sequence: 200 ☐	Sequence: 320 ☒ Sequence: ☐

EXAMINATION DATA

IND #	Ref Point Location	Size	Location L"	Location W"	Orientation to Nozzle
1	SEE PAGE 2 OF 3	(RN) 5/26/10			

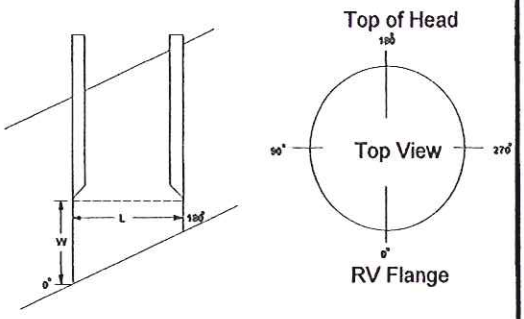

Results: Acceptable

No Recordable Indications: ☒

Limitations: None

Recordable Indications: ☐ (see above)

Remarks/ sketch (If Necessary) :

Examiner: Randy Albrecht Level: II Date: 05/26/10 Sign: R	Examiner: N/A Level: N/A Date: N/A Sign:
Reviewed: DAN Langenfeld Level: III Date: 5/26/10 Sign: Dan Langenfeld	ANII Review: NORTH, B. Date: Sign: Bruce North 5-26-10
Customer: D. MUNSON Date: Sign: 5/26/10	CR No.: N/A Page 1 of ~~2~~ 3 (RN) 5/26/10

AREVA

26 May 2010

Memorandum

To: Dewey Munson (FENOC)

From: Victor Morton (AREVA PT Level III)

Subject: RVCH Nozzle 4 Indication (for information only)

During the sequence 320 Liquid Penetrant Examination of Nozzle number 4 performed on 26 May 2010 an indication was observed and recorded on the DVD disc for sizing evaluation at the completion of the examination.

The indication was determined to be a rounded indication 0.16" in diameter, in accordance with the procedure only rounded indications with a dimension greater than 0.1875" are recordable this indication is not recordable and therefore, acceptable.

The purpose of this memorandum is to document the size and location of this indication for information only, though it may helpful when used for comparison purposes during subsequent examinations.

The indication is located 1.0" above the top of the weld taper, at approximately 100° in azimuth.

Vic Morton

Victor Morton AREVA Level III

5/26/2010

Date

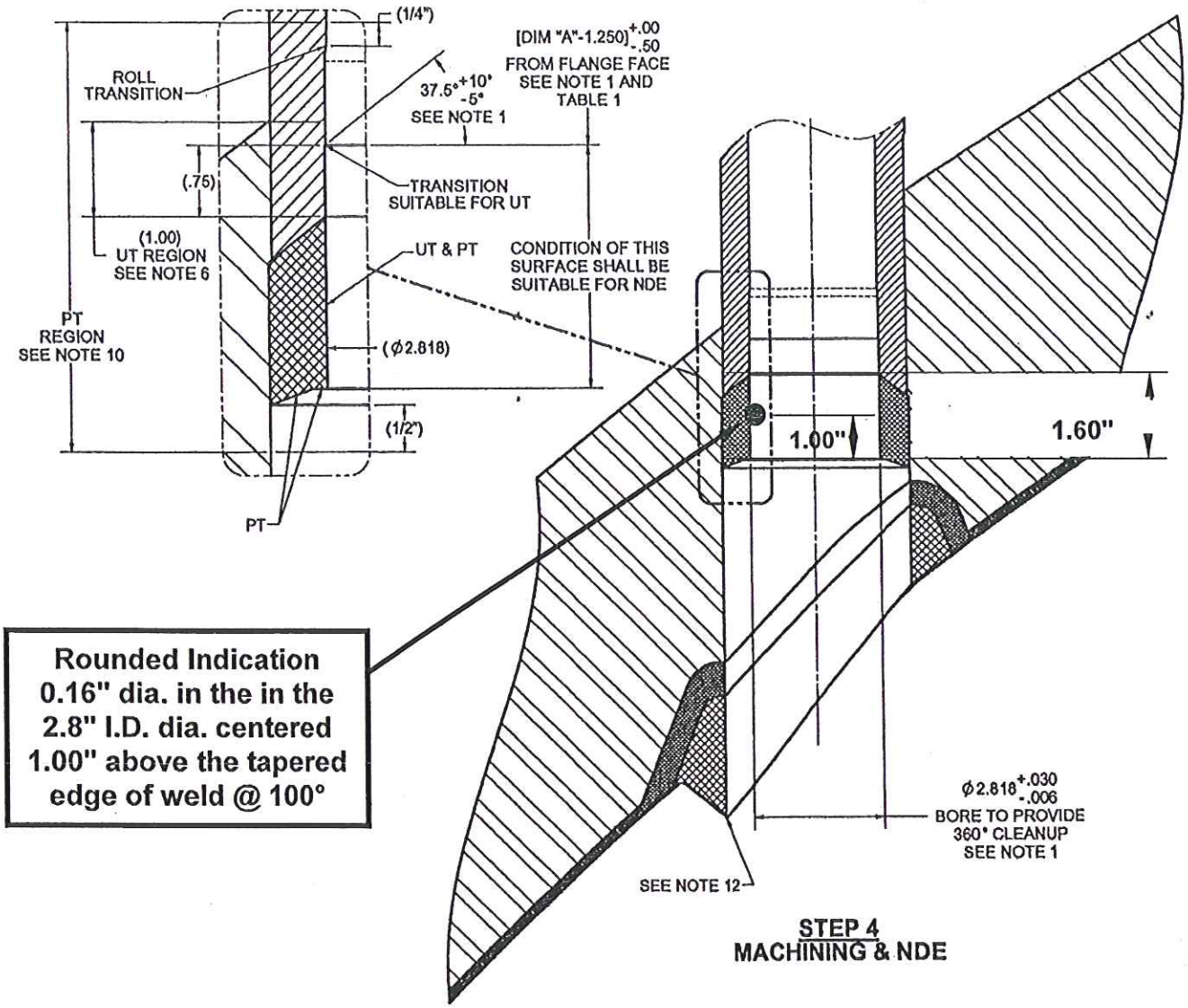

STEP 4
MACHINING & NDE